Copyright 2014 National Fire Protection Association (NFPA). Licensed, by agreement, for individual use and download on October 4, 2014 to LEADER and READER for designated user PATTARAPORN SRITRAKOOL. No other reproduction or transmission in any form permitted without written permission of NFPA. For inquires or to report unauthorized use, contact licensing@nfpa.org.

NFPA® 77

Recommended Practice on Static Electricity

2014 Edition



NFPA, 1 Batterymarch Park, Quincy, MA 02169-7471
An International Codes and Standards Organization

Copyright 2014 National Fire Protection Association (NFPA). Licensed, by agreement, for individual use and download on October 4, 2014 to LEADER and READER for designated user PATTARAPORN SRITRAKOOL. No other reproduction or transmission in any form permitted without written permission of NFPA. For inquires or to report unauthorized use, contact licensing@nfpa.org.

IMPORTANT NOTICES AND DISCLAIMERS CONCERNING NFPA® DOCUMENTS
NOTICE AND DISCLAIMER OF LIABILITY CONCERNING THE USE OF NFPA DOCUMENTS

NFPA® codes, standards, recommended practices, and guides ("NFPA Documents"), of which the document contained herein is one, are developed through a consensus standards development process approved by the American National Standards Institute. This process brings together volunteers representing varied viewpoints and interests to achieve consensus on fire and other safety issues. While the NFPA administers the process and establishes rules to promote fairness in the development of consensus, it does not independently test, evaluate, or verify the accuracy of any information or the soundness of any judgments contained in NFPA Documents.

The NFPA disclaims liability for any personal injury, property or other damages of any nature whatsoever, whether special, indirect, consequential or compensatory, directly or indirectly resulting from the publication, use of, or reliance on NFPA Documents. The NFPA also makes no guaranty or warranty as to the accuracy or completeness of any information published herein.

In issuing and making NFPA Documents available, the NFPA is not undertaking to render professional or other services for or on behalf of any person or entity. Nor is the NFPA undertaking to perform any duty owed by any person or entity to someone else. Anyone using this document should rely on his or her own independent judgment or, as appropriate, seek the advice of a competent professional in determining the exercise of reasonable care in any given circumstances.

The NFPA has no power, nor does it undertake, to police or enforce compliance with the contents of NFPA Documents. Nor does the NFPA list, certify, test, or inspect products, designs, or installations for compliance with this document. Any certification or other statement of compliance with the requirements of this document shall not be attributable to the NFPA and is solely the responsibility of the certifier or maker of the statement.

REMINDER: UPDATING OF NFPA DOCUMENTS

Users of NFPA codes, standards, recommended practices, and guides ("NFPA Documents") should be aware that NFPA Documents may be amended from time to time through the issuance of Tentative Interim Amendments or corrected by Errata. An official NFPA Document at any point in time consists of the current edition of the document together with any Tentative Interim Amendment and any Errata then in effect.

In order to determine whether an NFPA Document has been amended through the issuance of Tentative Interim Amendments or corrected by Errata, visit the Document Information Pages on NFPA's website. The Document Information Pages provide up-to-date, document specific information including any issued Tentative Interim Amendments and Errata.

To access the Document Information Page for a specific NFPA Document go to http://www.nfpa.org/document for a list of NFPA Documents, and click on the appropriate Document number (e.g., NFPA 101). In addition to posting all existing Tentative Interim Amendments and Errata, the Document Information Page also includes the option to sign-up for an "Alert" feature to receive an email notification when new updates and other information are posted regarding the document.

ISBN: 978-145590712-0 (Print)
ISBN: 978-145590737-3 (PDF)

Copyright 2014 National Fire Protection Association (NFPA). Licensed, by agreement, for individual use and download on October 4, 2014 to LEADER and READER for designated user PATTARAPORN SRITRAKOOL. No other reproduction or transmission in any form permitted without written permission of NFPA. For inquires or to report unauthorized use, contact licensing@nfpa.org.

IMPORTANT NOTICES AND DISCLAIMERS CONCERNING NFPA® DOCUMENTS

ADDITIONAL NOTICES AND DISCLAIMERS

Updating of NFPA Documents

Users of NFPA codes, standards, recommended practices, and guides ("NFPA Documents") should be aware that these documents may be superseded at any time by the issuance of new editions or may be amended from time to time through the issuance of Tentative Interim Amendments. An official NFPA Document at any point in time consists of the current edition of the document together with any Tentative Interim Amendments and any Errata then in effect. In order to determine whether a given document is the current edition and whether it has been amended through the issuance of Tentative Interim Amendments or corrected through the issuance of Errata, consult appropriate NFPA publications such as the National Fire Codes® Subscription Service, visit the NFPA website at www.nfpa.org, or contact the NFPA at the address listed below.

Interpretations of NFPA Documents

A statement, written or oral, that is not processed in accordance with Section 6 of the Regulations Governing Committee Projects shall not be considered the official position of NFPA or any of its Committees and shall not be considered to be, nor be relied upon as, a Formal Interpretation.

Patents

The NFPA does not take any position with respect to the validity of any patent rights referenced in, related to, or asserted in connection with an NFPA Document. The users of NFPA Documents bear the sole responsibility for determining the validity of any such patent rights, as well as the risk of infringement of such rights, and the NFPA disclaims liability for the infringement of any patent resulting from the use of or reliance on NFPA Documents.

NFPA adheres to the policy of the American National Standards Institute (ANSI) regarding the inclusion of patents in American National Standards ("the ANSI Patent Policy"), and hereby gives the following notice pursuant to that policy:

NOTICE: The user's attention is called to the possibility that compliance with an NFPA Document may require use of an invention covered by patent rights. NFPA takes no position as to the validity of any such patent rights or as to whether such patent rights constitute or include essential patent claims under the ANSI Patent Policy. If, in connection with the ANSI Patent Policy, a patent holder has filed a statement of willingness to grant licenses under these rights on reasonable and nondiscriminatory terms and conditions to applicants desiring to obtain such a license, copies of such filed statements can be obtained, on request, from NFPA. For further information, contact the NFPA at the address listed below.

Law and Regulations

Users of NFPA Documents should consult applicable federal, state, and local laws and regulations. NFPA does not, by the publication of its codes, standards, recommended practices, and guides, intend to urge action that is not in compliance with applicable laws, and these documents may not be construed as doing so.

Copyrights

NFPA Documents are copyrighted. They are made available for a wide variety of both public and private uses. These include both use, by reference, in laws and regulations, and use in private self-regulation, standardization, and the promotion of safe practices and methods. By making these documents available for use and adoption by public authorities and private users, the NFPA does not waive any rights in copyright to these documents.

Use of NFPA Documents for regulatory purposes should be accomplished through adoption by reference. The term "adoption by reference" means the citing of title, edition, and publishing information only. Any deletions, additions, and changes desired by the adopting authority should be noted separately in the adopting instrument. In order to assist NFPA in following the uses made of its documents, adopting authorities are requested to notify the NFPA (Attention: Secretary, Standards Council) in writing of such use. For technical assistance and questions concerning adoption of NFPA Documents, contact NFPA at the address below.

For Further Information

All questions or other communications relating to NFPA Documents and all requests for information on NFPA procedures governing its codes and standards development process, including information on the procedures for requesting Formal Interpretations, for proposing Tentative Interim Amendments, and for proposing revisions to NFPA documents during regular revision cycles, should be sent to NFPA headquarters, addressed to the attention of the Secretary, Standards Council, NFPA, 1 Batterymarch Park, P.O. Box 9101, Quincy, MA 02269-9101; email: stds_admin@nfpa.org

For more information about NFPA, visit the NFPA website at www.nfpa.org.

Copyright 2014 National Fire Protection Association (NFPA). Licensed, by agreement, for individual use and download on October 4, 2014 to LEADER and READER for designated user PATTARAPORN SRITRAKOOL. No other reproduction or transmission in any form permitted without written permission of NFPA. For inquires or to report unauthorized use, contact licensing@nfpa.org.

Copyright © 2013 National Fire Protection Association®. All Rights Reserved.

NFPA® 77

Recommended Practice on

Static Electricity

2014 Edition

This edition of NFPA 77, *Recommended Practice on Static Electricity*, was prepared by the Technical Committee on Static Electricity. It was issued by the Standards Council on May 28, 2013, with an effective date of June 17, 2013, and supersedes all previous editions.

This edition of NFPA 77 was approved as an American National Standard on June 17, 2013.

Origin and Development of NFPA 77

An NFPA project addressing static electricity was initiated in 1936, and a progress report was presented to the NFPA in 1937. A tentative edition of NFPA 77 was adopted in 1941. This tentative edition was further revised and officially adopted by the NFPA in 1946. Revisions were adopted in 1950, 1961, 1966, 1972, 1977, 1982, 1988, 1993, 2000, and 2007.

The 2000 edition of NFPA 77 presented a totally revised overview of the subject of static electricity and its hazards, including the current level of understanding of static electricity and considerable new information explaining the fundamental aspects of the phenomenon and recommendations for evaluating and controlling potential hazards. Also included were sections addressing specific hazards of flammable gases and vapors and combustible dusts, sections on specific industrial processes and operations, a database of relevant properties of numerous commercially significant materials, a glossary of terms, and diagrams that showed acceptable methods of bonding and grounding.

The 2007 edition of NFPA 77 included the following amendments:

(1) Numerous editorial changes to comply with the *Manual of Style for NFPA Technical Committee Documents*
(2) Text that allowed use of self-checking bonding clamps and bond wires that continuously monitor the resistance to ground and verify that resistance is maintained within acceptable levels
(3) Cautionary statements regarding the use of appropriate instruments based on the electrical classification of the area in which the instruments will be used
(4) Cautionary statements regarding the use of high-voltage static neutralizers in electrically classified areas and the use of such static neutralizers as inductive neutralizers when de-energized or upon failure
(5) Correction of errors

This edition of NFPA 77 includes the following amendments:

(1) The entire document has been reorganized into a more logical arrangement and some large chapters have been divided into several smaller chapters that are focused on a single topic.
(2) Many definitions previously located in Annex H, Glossary of Terms, have been moved to Chapter 2, because the defined terms are used numerous times in the body of the text.
(3) The discussion in Chapter 5 of the mechanisms of static electric charging and discharging of same has been revised for clarity.
(4) Information on the hazards of switch loading has been added to Chapter 9.
(5) The recommendations for filling storage tanks have been rewritten.
(6) The recommendations for flexible intermediate bulk containers have been rewritten.
(7) The recommendations for web processes have been rewritten.

NFPA and National Fire Protection Association are registered trademarks of the National Fire Protection Association, Quincy, Massachusetts 02169.

Copyright 2014 National Fire Protection Association (NFPA). Licensed, by agreement, for individual use and download on October 4, 2014 to LEADER and READER for designated user PATTARAPORN SRITRAKOOL. No other reproduction or transmission in any form permitted without written permission of NFPA. For inquires or to report unauthorized use, contact licensing@nfpa.org.

Technical Committee on Static Electricity

Charles G. Noll, *Chair*
XiPro Technologies LLC, PA [SE]

Peter R. Apostoluk, Greif Inc., OH [M]
Laurence G. Britton, Process Safety Consultant, WV [SE]
Vahid Ebadat, Chilworth Technology Inc., NJ [SE]
Stephen L. Fowler, Fowler Associates, Inc., SC [SE]
Robert L. Gravell, E. I. duPont de Nemours & Company, Inc., NJ [U]
Steven J. Gunsel, SGTechnologies, LLC, OH [SE]
Raymond G. Hinske, ExxonMobil Research & Engineering Co., VA [U]
Rep. American Petroleum Institute
Brian Minnich, Schuetz Container Systems, NJ [M]
Robert Mitchell, Intertek Testing Services, MA [RT]
Jeffrey S. Patton II, The Hanover Insurance Group, MD [I]
Bernard T. Price, Alliant Techsystems (ATK), UT [U]
James R. Reppermund, Howell, NJ [SE]
Douglas A. Rivord, Graco, Inc., MN [M]
Lon D. Santis, Institute of Makers of Explosives, DC [U]
Michael L. Savage, Sr., Middle Department Inspection Agency, Inc., MD [E]
Don Scarbrough, Elyria, OH [SE]
Thomas J. Wash, 3M Company, MN [M]
Gene H. Wolfe, R. R. Donnelley & Sons, IL [U]
G. Thomas Work II, Dow Corning Corporation, IN [U]
Rep. NFPA Industrial Fire Protection Section

Alternates

John E. Capers, Austin Powder Company, OH [U]
(Alt. to L. D. Santis)
C. James Dahn, Safety Consulting Engineers Inc., IL [SE]
(Alt. to V. Ebadat)
Michael T. Sherman, Graco, Inc., MN [M]
(Alt. to D. A. Rivord)

Nonvoting

Thomas H. Pratt, Burgoyne Inc., GA [SE]
(Member Emeritus)

Robert P. Benedetti, NFPA Staff Liaison

This list represents the membership at the time the Committee was balloted on the final text of this edition. Since that time, changes in the membership may have occurred. A key to classifications is found at the back of the document.

NOTE: Membership on a committee shall not in and of itself constitute an endorsement of the Association or any document developed by the committee on which the member serves.

Committee Scope: This Committee shall have primary responsibility for documents on safeguarding against the fire and explosion hazards associated with static electricity, including the prevention and control of these hazards. This Committee shall also have primary responsibility for conductive and static-dissipative floors, except as this subject is addressed by the Committee on Health Care Facilities.

Copyright 2014 National Fire Protection Association (NFPA). Licensed, by agreement, for individual use and download on October 4, 2014 to LEADER and READER for designated user PATTARAPORN SRITRAKOOL. No other reproduction or transmission in any form permitted without written permission of NFPA. For inquires or to report unauthorized use, contact licensing@nfpa.org.

Contents

Chapter 1 Administration 77– 5
1.1 Scope 77– 5
1.2 Purpose 77– 5
1.3 Application (Reserved) 77– 5
1.4 Equivalency 77– 5
1.5 Symbols, Units, and Formulas 77– 5

Chapter 2 Referenced Publications 77– 5
2.1 General 77– 5
2.2 NFPA Publications 77– 5
2.3 Other Publications 77– 5
2.4 References for Extracts in Recommendations Sections 77– 6

Chapter 3 Definitions 77– 6
3.1 General 77– 6
3.2 NFPA Official Definitions 77– 6
3.3 General Definitions 77– 6

Chapter 4 Units and Symbols of Measure 77– 8
4.1 Units (Reserved) 77– 8
4.2 Symbols 77– 8

Chapter 5 Fundamentals of Static Electricity 77– 9
5.1 General 77– 9
5.2 Separation of Charge by Contact of Materials 77– 9
5.3 Charging by Induction 77– 9
5.4 Accumulation and Dissipation of Charge 77–11
5.5 Discharge of Static Electricity and Ignition Mechanisms 77–12

Chapter 6 Evaluating Static Electricity Hazards 77–14
6.1 General 77–14
6.2 Measuring a Static Electric Charge 77–14
6.3 Measuring the Charge on a Conductor 77–14
6.4 Measuring the Charge on a Nonconductor 77–15
6.5 General Practices 77–16
6.6 Measuring the Accumulation and Relaxation of Charge 77–16
6.7 Measuring the Resistivity of Materials 77–16
6.8 Assessment of Conduction Paths 77–16
6.9 Measuring Spark Discharge Energies 77–17
6.10 Measuring Ignition Energies 77–17

Chapter 7 Control of Static Electricity and Its Hazards by Process Modification and Grounding 77–17
7.1 General 77–17
7.2 Control of Ignitible Mixtures in Equipment 77–17
7.3 Control of Generation of Static Electric Charge 77–17
7.4 Charge Dissipation 77–17

Chapter 8 Control of Static Electricity and Its Hazards by Static Eliminators and Personnel Factors 77–19
8.1 Charge Neutralization by Ionization of Air 77–19
8.2 Control of Static Electric Charge on Personnel 77–20
8.3 Maintenance and Testing 77–21
8.4 Discomfort and Injury 77–21

Chapter 9 Flammable and Combustible Liquids and Their Vapors 77–21
9.1 General 77–21
9.2 Combustion Characteristics of Liquids, Vapors, and Mists 77–21
9.3 Generation and Dissipation of Static Electric Charge in Liquids 77–22

Chapter 10 Fluid Flow in Piping, Hose, Tubing, and Filters 77–23
10.1 Metal Piping Systems 77–23
10.2 Nonconductive Pipe and Lined Pipe 77–23
10.3 Flexible Hose and Tubing 77–24
10.4 Fill Pipes 77–24
10.5 Filtration 77–24
10.6 Suspended Material 77–25
10.7 Miscellaneous Line Restrictions 77–25

Chapter 11 Static Electricity Hazards of Liquids in Containers and Intermediate Bulk Containers 77–25
11.1 Portable Tanks, Intermediate Bulk Containers (IBCs), and Non-Bulk Containers 77–25
11.2 Cleaning of Containers 77–26

Chapter 12 Static Electricity Hazards of Liquids in Bulk Storage Tanks and in Tank Vehicles 77–27
12.1 Storage Tanks 77–27
12.2 Loading of Tank Vehicles 77–29
12.3 Vacuum Trucks 77–31
12.4 Railroad Tank Cars 77–31
12.5 Marine Vessel and Barge Cargo Tanks 77–31

Copyright 2014 National Fire Protection Association (NFPA). Licensed, by agreement, for individual use and download on October 4, 2014 to LEADER and READER for designated user PATTARAPORN SRITRAKOOL. No other reproduction or transmission in any form permitted without written permission of NFPA. For inquires or to report unauthorized use, contact licensing@nfpa.org.

Chapter 13 Static Electricity Hazards in Process Vessels **77–31**
13.1 General **77–31**
13.2 Procedures for Transfer to Tanks **77–31**
13.3 Agitation **77–31**
13.4 Process Vessels with Nonconductive Linings **77–31**
13.5 Adding Solids **77–31**
13.6 Mixing Solids **77–32**
13.7 Nonconductive Process Vessels **77–32**

Chapter 14 Static Electricity Hazards of Operations in Process Vessels and Tanks **77–32**
14.1 General **77–32**
14.2 Gauging and Sampling **77–32**
14.3 Cleaning Vessels and Tanks **77–33**
14.4 Vacuum Cleaning **77–33**
14.5 Clean Gas Flows **77–33**
14.6 Ancillary Operations (Reserved) **77–33**

Chapter 15 Powders and Dusts **77–33**
15.1 General **77–33**
15.2 Combustibility of Dust Clouds **77–34**
15.3 Mechanisms of Static Electric Charging **77–34**
15.4 Retention of Static Electric Charge **77–34**
15.5 Discharges in Powder Operations **77–35**
15.6 Discharges During Filling Operations **77–35**
15.7 Pneumatic Transport Systems **77–36**
15.8 Flexible Hose **77–36**
15.9 Flexible Boots and Socks **77–36**
15.10 Fabric Filters **77–36**
15.11 Hybrid Mixtures **77–37**
15.12 Manual Addition of Powders to Flammable Liquids **77–37**
15.13 Bulk Storage **77–37**

Chapter 16 Intermediate Bulk Containers (IBCs) for Powders **77–38**
16.1 General **77–38**
16.2 Types of Discharge **77–38**
16.3 Granular Material **77–38**
16.4 Conductive Intermediate Bulk Containers (IBCs) **77–38**
16.5 Nonconductive Intermediate Bulk Containers (IBCs) **77–39**
16.6 Flexible Intermediate Bulk Containers (FIBCs) **77–39**

Chapter 17 Web and Sheet Processes **77–40**
17.1 General **77–40**
17.2 Substrates **77–41**
17.3 Inks and Coatings **77–41**
17.4 Processes **77–41**
17.5 Control of Static Electricity in Web Processes **77–42**

Chapter 18 Miscellaneous Applications **77–43**
18.1 Spray Application Processes **77–43**
18.2 Belts and Conveyors **77–43**
18.3 Explosives **77–44**
18.4 Cathode Ray Tube Video Display Terminals **77–44**
18.5 Plastic Sheets and Wraps **77–45**

Annex A Explanatory Material **77–45**

Annex B Physical Characteristics of Materials **77–50**

Annex C Additional Information on Flash Point **77–56**

Annex D Additional Information on Vapor Pressure **77–56**

Annex E Additional Information on Charge Relaxation **77–57**

Annex F Additional Information on Conductivity **77–58**

Annex G Recommended Means for Providing Bonding and Grounding **77–58**

Annex H Glossary of Terms **77–62**

Annex I Bibliography **77–62**

Annex J Informational References **77–62**

Index **77–64**

Copyright 2014 National Fire Protection Association (NFPA). Licensed, by agreement, for individual use and download on October 4, 2014 to LEADER and READER for designated user PATTARAPORN SRITRAKOOL. No other reproduction or transmission in any form permitted without written permission of NFPA. For inquires or to report unauthorized use, contact licensing@nfpa.org.

NFPA 77

Recommended Practice on

Static Electricity

2014 Edition

IMPORTANT NOTE: This NFPA document is made available for use subject to important notices and legal disclaimers. These notices and disclaimers appear in all publications containing this document and may be found under the heading "Important Notices and Disclaimers Concerning NFPA Documents." They can also be obtained on request from NFPA or viewed at www.nfpa.org/disclaimers.

NOTICE: An asterisk (*) following the number or letter designating a paragraph indicates that explanatory material on the paragraph can be found in Annex A.

Changes other than editorial are indicated by a vertical rule beside the paragraph, table, or figure in which the change occurred. These rules are included as an aid to the user in identifying changes from the previous edition. Where one or more complete paragraphs have been deleted, the deletion is indicated by a bullet (•) between the paragraphs that remain.

A reference in brackets [ ] following a section or paragraph indicates material that has been extracted from another NFPA document. As an aid to the user, the complete title and edition of the source documents for extracts in the recommendations sections of this document are given in Chapter 2 and those for extracts in the informational sections are given in Annex J. Extracted text may be edited for consistency and style and may include the revision of internal paragraph references and other references as appropriate. Requests for interpretations or revisions of extracted text should be sent to the technical committee responsible for the source document.

Information on referenced publications can be found in Chapter 2 and Annex J.

Chapter 1 Administration

1.1 Scope.

1.1.1 This recommended practice applies to the identification, assessment, and control of static electricity for purposes of preventing fires and explosions.

1.1.2* This recommended practice does not apply directly to shock hazards from static electricity. However, application of the principles set forth in this recommended practice can reduce such shock hazards to personnel.

1.1.3 Reserved.

1.1.4* This recommended practice does not apply to lightning.

1.1.5* This recommended practice does not apply to stray electrical currents or to induced currents from radio frequency (RF) energy.

1.1.6* This recommended practice does not apply to fueling of motor vehicles, marine craft, or aircraft.

1.1.7* This recommended practice does not apply to cleanrooms.

1.1.8 This recommended practice does not apply to control of static electricity and its hazards as they might affect electronic components or circuits, which have their own requirements.

1.2 Purpose. The purpose of this recommended practice is to assist the user in controlling the hazards associated with the generation, accumulation, and discharge of static electricity by providing the following:

(1) Basic understanding of the nature of static electricity
(2) Guidelines for identifying and assessing the hazards of static electricity
(3) Techniques for controlling the hazards of static electricity
(4) Guidelines for controlling static electricity in selected industrial applications

1.3 Application. (Reserved)

1.4 Equivalency. Nothing in this recommended practice is intended to prevent the use of systems, methods, or devices of equivalent or superior quality, strength, fire resistance, effectiveness, durability, and safety over those prescribed by this recommended practice.

1.4.1 Technical documentation should be submitted to the authority having jurisdiction to demonstrate equivalency.

1.4.2 The system, method, or device should be approved for the intended purpose by the authority having jurisdiction.

1.5 Symbols, Units, and Formulas. The units of measure and symbols used in this recommended practice are as described in Chapter 4.

Chapter 2 Referenced Publications

2.1 General. The documents or portions thereof listed in this chapter are referenced within this recommended practice and should be considered part of the recommendations of this document.

2.2 NFPA Publications. National Fire Protection Association, 1 Batterymarch Park, Quincy, MA 02169-7471.

NFPA 30, *Flammable and Combustible Liquids Code,* 2012 edition.

NFPA 69, *Standard on Explosion Prevention Systems,* 2008 edition.

NFPA 70®, National Electrical Code®, 2014 edition.

NFPA 495, *Explosive Materials Code,* 2013 edition.

NFPA 496, *Standard for Purged and Pressurized Enclosures for Electrical Equipment,* 2013 edition.

NFPA 498, *Standard for Safe Havens and Interchange Lots for Vehicles Transporting Explosives,* 2013 edition.

NFPA 654, *Standard for the Prevention of Fire and Dust Explosions from the Manufacturing, Processing, and Handling of Combustible Particulate Solids,* 2013 edition.

NFPA 1124, *Code for the Manufacture, Transportation, Storage, and Retail Sales of Fireworks and Pyrotechnic Articles,* 2013 edition.

NFPA 1125, *Code for the Manufacture of Model Rocket and High Power Rocket Motors,* 2012 edition.

2.3 Other Publications.

2.3.1 AIChE Publications. American Institute of Chemical Engineers, 3 Park Avenue, New York, NY 10016-5901.

Britton, L. G., "Using Heats of Oxidation to Evaluate Flammability Hazards," *Process Safety Progress,* Vol. 21, No. 1, March 2002.

Britton, L. G., "Using Material Data in Static Hazard Assessment," *Plant/Operations Progress,* April 1992, pp. 56–70.

Copyright 2014 National Fire Protection Association (NFPA). Licensed, by agreement, for individual use and download on October 4, 2014 to LEADER and READER for designated user PATTARAPORN SRITRAKOOL. No other reproduction or transmission in any form permitted without written permission of NFPA. For inquires or to report unauthorized use, contact licensing@nfpa.org.

2.3.2 API Publications. American Petroleum Institute, 1220 L Street, NW, Washington, DC 20005.

API RP 2003, *Protection Against Ignitions Arising Out of Static, Lightning, and Stray Currents*, 7th edition, 2008.

2.3.3 ASTM Publications. ASTM International, 100 Barr Harbor Drive, P.O. Box C700, West Conshohocken, PA 19428-2959.

ASTM D 257, *Standard Test Methods for DC Resistance or Conductance of Insulating Materials*, 2007.

ASTM E 502, *Standard Test Method for Selection and Use of ASTM Standards for the Determination of Flash Point of Chemicals by Closed Cup Methods*, 1994.

2.3.4 CENELEC Publications. European Committee for Electrotechnical Standardization, Rue de Stassartstraat, 35, B-1050 Brussels, Belgium.

EN 61241-2-2, *Electrical Apparatus for Use in the Presence of Combustible Dust — Part 2: Test Methods; Section 2: Method for Determining the Electrical Resistivity of Dust in Layers*, International Electrotechnical Commission, Brussels, 1996.

CENELEC TR 50504, *Electrostatics — Code of Practice for the Avoidance of Hazards Due to Static Electricity*, 2003.

2.3.5 Elsevier Publications. Elsevier NV, Radarweg 29, Amsterdam 1043, Netherlands.

Britton, L. G. and Smith, J. A., "Static Hazards of the VAST," *Journal of Loss Prevention in the Process Industries*, Vol. 25, pp. 309–328, 2012.

2.3.6 IEC Publications. International Electrotechnical Commission, 3, rue de Varembé, P.O. Box 131, CH-1211 Geneva 20, Switzerland.

IEC 61241-2-3, *Electrical apparatus for use in the presence of combustible dust — Part 2: Test methods — Section 3: Method for determining minimum ignition energy of dust/air mixtures*, 1994.

IEC 61340-4-4, *Electrostatics — Part 4–4: Standard test methods for specific applications — Electrostatic classification of flexible intermediate bulk containers (FIBC)*, 2005.

2.3.7 IME Publications. Institute of Makers of Explosives, 1120 Nineteenth Street, NW, Suite 310, Washington, DC 20036-3605.

Safety Library Publication No. 3, *Suggested Code of Regulations for the Manufacture, Transportation, Storage, Sale, Possession, and Use of Explosive Materials*, 2009.

Safety Library Publication No. 17, *Safety in the Transportation, Storage, Handling, and Use of Explosive Materials*, 2011.

2.3.8 JIS Publications. Japan Industrial Standards, 1-3-1 Kasumigaseki, Chiyoda-ku, Tokyo 100-8901, Japan.

JIS B 9915, *Measuring Methods for Dust Resistivity (with Parallel Electrodes)*, Japan Industrial Standards, Tokyo, 1989.

2.3.9 U.S. Department of Defense Publications. U.S. Government Printing Office, Washington, DC 20402.

Standard 4145.26M, *Contractors' Safety Manual for Ammunition and Explosives.*

Standard 6055.9, *Ammunition and Explosive Safety Standards.*

2.3.10 Other Publications.

BS 5958, *Code of Practice for Control of Undesirable Static Electricity*, Part 1, General Considerations, British Standards Institution, London, 1991.

Glor, M., *Electrostatic Hazards in Powder Handling*, Research Studies Press, Ltd., Letchworth, Hertfordshire, England, 1988.

International Safety Guide for Oil Tankers and Terminals (ISGOTT), 4th Edition, Witherby and Co., Ltd., London, 5th edition, 2006.

Merriam-Webster's Collegiate Dictionary, 11th edition, Merriam-Webster, Inc., Springfield, MA, 2003.

Pratt, T. H., *Electrostatic Ignitions of Fires and Explosions*, Burgoyne, Inc., Marietta, GA, 1997.

Walmsley, H. L., "Avoidance of Electrostatic Hazards in the Petroleum Industry," *Journal of Electrostatics*, Vol. 27, No. 1 and No. 2, Elsevier, New York, 1992.

2.4 References for Extracts in Recommendations Sections.

NFPA 30, *Flammable and Combustible Liquids Code*, 2012 edition.

NFPA 654, *Standard for the Prevention of Fire and Dust Explosions from the Manufacturing, Processing, and Handling of Combustible Particulate Solids*, 2013 edition.

Chapter 3 Definitions

3.1 General. The definitions contained in this chapter apply to the terms used in this recommended practice. Where terms are not defined in this chapter or within another chapter, they should be defined using their ordinarily accepted meanings within the context in which they are used. *Merriam-Webster's Collegiate Dictionary*, 11th edition, is the source for the ordinarily accepted meaning.

3.2 NFPA Official Definitions.

3.2.1* Approved. Acceptable to the authority having jurisdiction.

3.2.2* Authority Having Jurisdiction (AHJ). An organization, office, or individual responsible for enforcing the requirements of a code or standard, or for approving equipment, materials, an installation, or a procedure.

3.2.3* Listed. Equipment, materials, or services included in a list published by an organization that is acceptable to the authority having jurisdiction and concerned with evaluation of products or services, that maintains periodic inspection of production of listed equipment or materials or periodic evaluation of services, and whose listing states that either the equipment, material, or service meets appropriate designated standards or has been tested and found suitable for a specified purpose.

3.2.4 Recommended Practice. A document that is similar in content and structure to a code or standard but that contains only nonmandatory provisions using the word "should" to indicate recommendations in the body of the text.

3.2.5 Should. Indicates a recommendation or that which is advised but not required.

3.3* General Definitions.

3.3.1 Antistatic. Capable of dissipating a static electric charge at an acceptable rate for the intended purpose.

3.3.1.1* *Antistatic Additive.* An additive used to increase the surface or volume conductivity of a liquid or solid material.

Copyright 2014 National Fire Protection Association (NFPA). Licensed, by agreement, for individual use and download on October 4, 2014 to LEADER and READER for designated user PATTARAPORN SRITRAKOOL. No other reproduction or transmission in any form permitted without written permission of NFPA. For inquires or to report unauthorized use, contact licensing@nfpa.org.

3.3.2 Bonding. For the purpose of controlling static electric hazards, the process of connecting two or more conductive objects together by means of a conductor so that they are at the same electrical potential, but not necessarily at the same potential as the earth.

3.3.3 Breakdown Strength. The minimum electric field, measured in volts per meter, necessary to cause a spark through a material that is held between electrodes that produce a uniform electric field under specified test conditions.

3.3.4 Breakdown Voltage. The minimum voltage, necessary to cause a spark through a material under a given set of conditions.

3.3.5* Capacitance. The amount of charge, measured in coulombs per volt or in farads, that must be stored on a specified body or material to raise the potential difference by 1 volt.

3.3.6 Charge. A collection or imbalance of electrons or of positive or negative ions that can accumulate on both conductors and insulators and that has both magnitude and polarity. Movement of charge constitutes an electric current. Excess or deficiency of electrons is expressed in coulombs. An electron carries a charge of -1.6×10^{-19} coulomb.

3.3.6.1 ***Charge Decay Time.*** The time for static electric charge to be reduced to a specified percentage of the charge's original magnitude.

3.3.6.2 ***Charge Density.*** The charge per unit area on a surface or the charge per unit volume in space. Surface charge density is measured in coulombs per square meter. Volume charge density, also called *space charge density* or *space charge*, is measured in coulombs per cubic meter.

3.3.6.3 ***Charge Relaxation.*** The process by which separated charges recombine or by which excess charge is lost from a system.

3.3.7 Charging.

3.3.7.1 ***Induction Charging.*** The act of charging an object by bringing it near another charged object, then touching the first object to ground; also known as *induction*. Charge polarization is induced on a grounded object in the vicinity of a charged surface due to the electric field existing between the object and the surface. If the ground connection is removed from the object during this period, the induced charge remains on the object. Induction charging occurs where a person walks from a conductive floor covering onto an insulating floor in the presence of an electric field.

3.3.7.2* ***Triboelectric Charging.*** Static electric charging that results from contact or friction between two dissimilar materials; also known as frictional charging and contact-separation charging.

3.3.8 Combustible. Capable of undergoing combustion.

3.3.9 Combustible Dust. A combustible particulate solid that presents a fire or deflagration hazard when suspended in air or other oxidizing medium over a range of concentrations, regardless of particle size or shape. [**654,** 2013]

3.3.10 Combustion. A chemical process of oxidation that occurs at a rate fast enough to produce heat and usually light in the form of either a glow or a flame.

3.3.11 Conductive. Possessing the ability to allow the flow of an electric charge; typically, liquids possessing a conductivity greater than 10^4 picosiemens per meter (pS/m) or solids having a resistivity less than 10^5 ohm-meters (Ω-m).

3.3.12* Conductivity (σ). The reciprocal of resistivity, that is, 1/resistivity. An intrinsic property of a solid or liquid that governs the way electrical charges move across its surface or through its bulk.

3.3.13 Conductor. A material or object that allows an electric charge to flow easily through it.

3.3.14 Current (I). A measure of the rate of transport of electric charge past a specified point or across a specified surface. The symbol I is generally used for constant currents, and the symbol i is used for time-variable currents. The unit of current is the ampere; 1 ampere equals 1 coulomb/sec (6.24×10^{18} electrons/sec).

3.3.14.1 ***Charging Current (I_c).*** The rate of flow of charge into a given system per unit of time, expressed in amperes.

3.3.14.2 ***Streaming Current (I_s).*** The current produced by the flow of a charged liquid or solid.

3.3.15* Dielectric Constant. The ratio of the permittivity of a material to the permittivity of a vacuum that indicates a material's ability, relative to a vacuum, to store electrical energy or charge, where the material is placed in an electric field.

3.3.16* Dielectric Strength. The maximum electrical potential gradient (electric field) that a material can withstand without electric breakdown, usually specified in volts per millimeter of thickness; also known as *electric strength* or *breakdown strength*.

3.3.17 Discharge.

3.3.17.1* ***Brush Discharge.*** A higher energy form of corona discharge characterized by low-frequency bursts or by streamers, which can form between charged nonconductive surfaces and grounded conductors.

3.3.17.2* ***Bulking Brush Discharge.*** A partial surface discharge over the top of solid piles that is created during bulking of powder in containers and that appears as a luminous, branched channel flashing radially from the wall toward the center of the pile.

3.3.17.3* ***Corona Discharge.*** A low energy electrical discharge that results from a localized electrical breakdown of gases near sharp conductive edges, needle points, and wires.

3.3.17.4* ***Propagating Brush Discharge.*** An energetic discharge caused by electrical breakdown across a dielectric layer having equal and opposite charges on the opposite sides of the layer.

3.3.18* Dissipative. A material or a construction that will reduce static charge to acceptable levels.

3.3.19* Double Layer. A phenomenon usually associated with a solid–liquid interface where ions of one charge type are fixed to the surface of the solid, and an equal number of mobile ions of opposite charge are distributed through the neighboring region of the liquid.

3.3.20 Electrometer. A device used to measure static electric charge with high-input impedance, typically greater than 10^{13} ohms, which draws negligible current from the measured object.

3.3.21 Flammable Limit.

3.3.21.1 ***Lower Flammable Limit (LFL).*** The lowest molar (or volume) concentration of a combustible substance in an oxidizing medium that will propagate a flame.

3.3.21.2 ***Upper Flammable Limit (UFL).*** The highest molar (or volume) concentration of a combustible substance in an oxidizing medium that will propagate a flame.

Copyright 2014 National Fire Protection Association (NFPA). Licensed, by agreement, for individual use and download on October 4, 2014 to LEADER and READER for designated user PATTARAPORN SRITRAKOOL. No other reproduction or transmission in any form permitted without written permission of NFPA. For inquires or to report unauthorized use, contact licensing@nfpa.org.

3.3.22 Grounding. The process of bonding one or more conductive objects to the ground, so that all objects are at zero (0) electrical potential; also referred to as *earthing*.

3.3.23 Ignitible Mixture. A gas–air, vapor–air, mist–air, or dust–air mixture, or combinations of such mixtures, that can be ignited by a sufficiently strong source of energy, such as a static electric discharge.

3.3.24 Ignition Energy. The energy required to effect ignition of a specified fuel mixture under specified conditions of test.

3.3.24.1 ***Minimum Ignition Energy (MIE).*** The energy, usually expressed in millijoules, stored in a capacitor that, upon discharge, is just sufficient to effect ignition of the most ignitible mixture of a given fuel mixture under specified test conditions.

3.3.25 Incendive. Able to cause ignition.

3.3.26 Induction. The process by which charges are moved to new locations on a conductor by the action of an electric field or the movement of a conductor into the influence of an existing electric field.

3.3.27* Induction Bar. A device that produces air ions by means of corona discharge when in close proximity to a charged nonconductive surface.

3.3.28 Inert Gas. For the purpose of controlling static electric hazards, a nonflammable, nonreactive gas that renders the combustible material in a system incapable of supporting combustion.

3.3.29 Ionization. A process by which a neutral atom or molecule loses or gains electrons, thereby acquiring a net charge and becoming an ion.

3.3.30 Megohmeter. A meter used to measure high resistance values that typically operates at higher test voltages than standard ohmmeters, usually in the range of 100 volts to 1000 volts.

3.3.31 Minimum Explosible Concentration (MEC). The lowest concentration of a combustible dust in air, expressed in grams per cubic meter, that will propagate a flame.

3.3.32 Nonconductor (Insulator). A material that has the ability to accumulate charge, even when in contact with ground.

3.3.33 Ohms per Square. A unit of surface resistivity determined by use of a square electrode configuration to measure the resistance.

3.3.34 Relaxation Time Constant (τ). The time, in seconds, for charge to decay by Ohm's law to e^{-1} (36.7 percent) of its initial value. For a capacitor, the relaxation time constant is the product of resistance (ohms) and capacitance (farads).

3.3.35 Resistance *(R).* The opposition that a material offers to the flow of current, expressed in ohms, and which is equal to the voltage (*V*, in volts) between two points divided by the current (*I*, amperes) that flows between those points.

3.3.36 Resistivity. The intrinsic property of a homogeneous material that opposes the flow of electric current. A low resistivity (high conductivity) indicates a material that readily allows the movement of electrical charge. The resistivity across the surface of a material will differ from the resistivity through a volume of the same material. Also, the *resistance* of a material depends on its resistivity and its geometry. Resistivity is the reciprocal of conductivity.

3.3.36.1 ***Surface Resistivity.*** The electric resistance of the surface of an insulator, in ohms per square, as measured between the opposite sides of a square on the surface, and whose value in ohms is independent of the size of the square or the thickness of the surface film.

3.3.36.2* ***Volume Resistivity.*** The intrinsic property of a material that offers resistance to the flow of electric current through the material, expressed in ohm-meters (ohm-m) or ohm-centimeters (ohm-cm).

3.3.37 Semiconductive (Static Dissipative). Liquids that typically possess a conductivity between 10^2 pS/m and 10^4 pS/m or solids that typically possess a resistivity between 10^5 Ω-m and 10^9 Ω-m.

3.3.38 Spark. A short-duration electric discharge due to a sudden breakdown of air or some other insulating material separating two conductors at different electric potentials, accompanied by a momentary flash of light; also known as *electric spark*, *spark discharge*, and *sparkover*.

3.3.39 Static Electric Discharge. A release of static electricity in the form of a spark, corona discharge, brush discharge, bulking brush discharge, or propagating brush discharge that might be capable of causing ignition of a flammable atmosphere under appropriate circumstances.

3.3.40 Static Electricity. The branch of electrical science dealing with the effects of the accumulation of electric charge.

3.3.41* Surface Streamer. A surface-to-wall discharge observed on charged liquids during tanker filling, appearing as a flash up to 30 cm long and accompanied by a crackling sound.

3.3.42* Triboelectric Series. A ranking of materials according to their affinity to accept or donate electrons.

Chapter 4 Units and Symbols of Measure

4.1 Units. (Reserved)

4.2 Symbols. The following symbols are used throughout this recommended practice and are defined as follows:

C = capacitance (farads)
d = diameter (meters)
E = electric field strength (volts per meter)
e = base of Napierian (natural) logarithms = 2.718
ε = permittivity of a material (farads per meter)
ε_0 = permittivity of a vacuum (farads per meter)
$\varepsilon\varepsilon_0$ = dielectric constant (kappa)
I = electric current (amperes)
I_s = streaming current (amperes)
σ = liquid conductivity (siemens per meter)
μ = ion mobility (square meters per volt-second)
μm = micrometers (microns) = 10^{-6} meter
Ω = electric resistance (ohms)
Ω-m = electrical resistivity (ohm-meters)
Q = quantity of electrical charge (coulombs)
R = electrical resistance (ohms)
ρ = volume resistivity (ohm-meters)
S = electrical conductance (siemens)
t = elapsed time (seconds)
τ = charge relaxation time constant (seconds)
v = flow velocity (meters per second)
V = electrical potential difference (volts)
W = energy or work done (joules)

Copyright 2014 National Fire Protection Association (NFPA). Licensed, by agreement, for individual use and download on October 4, 2014 to LEADER and READER for designated user PATTARAPORN SRITRAKOOL. No other reproduction or transmission in any form permitted without written permission of NFPA. For inquires or to report unauthorized use, contact licensing@nfpa.org.

Chapter 5 Fundamentals of Static Electricity

5.1 General.

5.1.1 The most common experiences of static electricity are the crackling and clinging of fabrics as they are removed from a clothes dryer or the electric shock felt when touching a metal object after walking across a carpeted floor or stepping out of an automobile. Nearly everyone recognizes that these phenomena occur mainly when the atmosphere is very dry, particularly in winter. To most people, static electricity is simply an annoyance. In many industries, particularly those where combustible materials are handled, static electricity can cause fires or explosions.

5.1.2 The word *electricity* is derived from *elektron,* the ancient Greek word for *amber.* The phenomenon of electrification was first noticed when pieces of amber were rubbed briskly. For centuries, the word *electricity* had no meaning other than the ability of some substances to attract or repel lightweight objects after being rubbed with a material such as silk or wool. Stronger electrification accompanied by luminous effects and small sparks was first observed about 300 years ago by Otto von Guericke.

5.1.3 In comparatively recent times, when the properties of flowing (current) electricity were discovered, the term *static* came into use to distinguish a charge that was at rest from one that was in motion. Today the term is used to describe phenomena that originate from an electric charge, regardless of whether the charge is at rest or in motion.

5.1.4 All materials, whether solid or fluid, are composed of various arrangements of atoms. Atoms are composed of positively charged nuclear components, which give them mass, surrounded by negatively charged electrons. Atoms can be considered electrically neutral in their normal state, meaning that there are equal amounts of positive and negative charge. They can become charged where there is an excess or a deficiency of electrons relative to the neutral state. Electrons are mobile and of insignificant mass and are the charge carriers most associated with static electricity.

5.1.5 In materials that are conductors of electricity, such as metals, electrons can move freely. In materials that are insulators, electrons are more tightly bound to the nuclei of the atoms and are not free to move. Examples of materials that often are insulators include glass, rubber, plastics, gases, paper, and petroleum products.

5.1.6 The mobility of electrons in materials known as semiconductors is freer than in insulators but is still less than in conductors. Semiconductive materials are commonly characterized by their high electrical resistance, which can be measured with a megohmmeter.

5.1.7 In otherwise insulating fluids, an electron can separate from one atom and move freely or attach to another atom to form a negative ion. The atom losing the electron then becomes a positive ion. Ions are charged atoms and molecules.

5.1.8 Unlike charges attract each other, and the attractive force can draw the charges together if the charges are mobile. The energy stored is the result of the work done to separate the charges.

5.2 Separation of Charge by Contact of Materials. Separation of charge cannot be prevented absolutely, because the origin of the charge lies at the interface of materials. Where materials are placed in contact, some electrons move from one material to the other until a balance (equilibrium condition) in energy is reached. This charge separation is most noticeable in liquids that are in contact with solid surfaces and in solids that are in contact with other solids. The flow of clean gas over a solid surface produces negligible charging.

5.2.1 The enhanced charging that results from materials being rubbed together (triboelectric charging) is the result of surface electrons being exposed to a broad variety of energies in an adjacent material, so that charge separation is more likely to take place. The breakup of liquids by splashing and misting results in a similar charge separation. It is necessary to transfer only about one electron for each 500,000 atoms to produce a condition that can lead to a static electric discharge. Surface contaminants at very low concentrations can play a significant role in charge separation at the interface of materials. *[See Figure 5.2.1(a) and Figure 5.2.1(b).]*

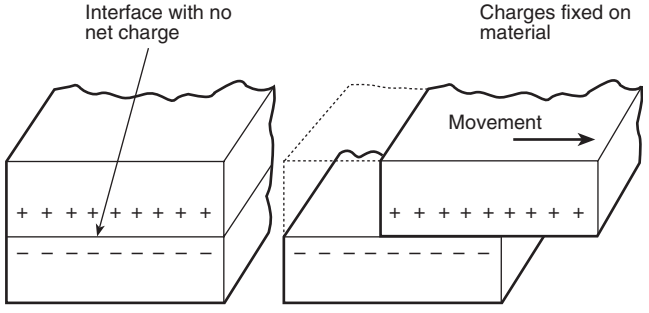

FIGURE 5.2.1(a) Typical Charge Generation by Relative Movement of Insulating Materials. ***(Source: H. L. Walmsley, "Avoidance of Electrostatic Hazards in the Petroleum Industry," p. 19.)***

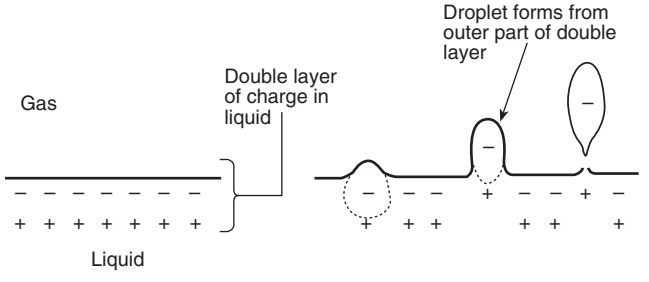

FIGURE 5.2.1(b) Typical Charge Generation by Atomization. ***(Source: H. L. Walmsley, "Avoidance of Electrostatic Hazards in the Petroleum Industry," p. 19.)***

5.2.2 Charge can also be injected into a stream of nonconductive fluid by submerging within the stream a pointed electrode on which a high voltage has been impressed.

5.3 Charging by Induction.

5.3.1 Theory of Induction Charging. Conductive materials can become charged when brought near a highly charged surface. Assume a charged insulator, as shown in Figure 5.3.1(a). An ungrounded conductor is brought close to the charged insulator, as shown in Figure 5.3.1(b). Electrons in the conductor are either drawn toward or forced away from the region of closest approach to the charged insulator's surface, depending on the nature of the charge on that surface. If the ungrounded conductor is then touched to ground or to a third object, electrons can flow to or

Copyright 2014 National Fire Protection Association (NFPA). Licensed, by agreement, for individual use and download on October 4, 2014 to LEADER and READER for designated user PATTARAPORN SRITRAKOOL. No other reproduction or transmission in any form permitted without written permission of NFPA. For inquires or to report unauthorized use, contact licensing@nfpa.org.

from ground or the object, changing the net charge on the conductor. This is shown in Figure 5.3.1(c). If, as shown in Figure 5.3.1(d), contact is then broken and the conductor and charged surface are separated, the charge on the now isolated conductor remains the same as when contact is broken. The net charge that was transferred during contact is called *induced charge*.

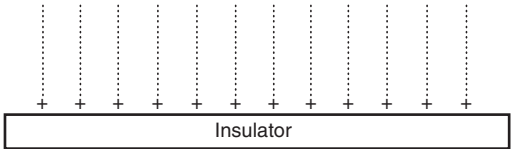

FIGURE 5.3.1(a) Charged Insulator with Field Lines Shown. ***(Source: T. H. Pratt, Electrostatic Ignitions of Fires and Explosions, p. 29.)***

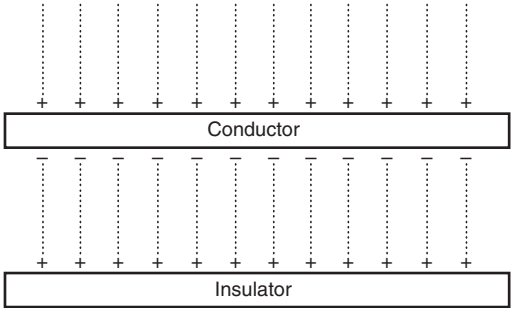

FIGURE 5.3.1(b) Charge Redistribution on a Conductor as It Nears a Charged Surface Charge remains on conductor as conductor is removed from contact with insulator. ***(Source: T. H. Pratt, Electrostatic Ignitions of Fires and Explosions, p. 29.)***

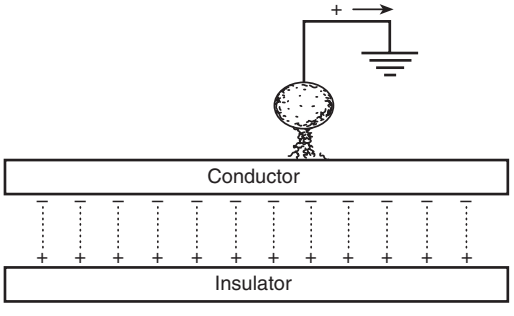

FIGURE 5.3.1(c) Net Charge Transfer to or from Conductor as a Result of Contact or Discharge. ***(Source: T. H. Pratt, Electrostatic Ignitions of Fires and Explosions, p. 29.)***

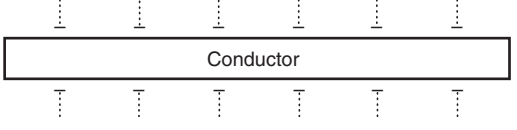

FIGURE 5.3.1(d) Isolated Conductor Carrying a Charge (After Being Separated from Insulator).

5.3.1.1 The separation of charge on a neutral isolated conductor and its distribution near a charged insulating surface produces electrical stresses near the point of closest approach. Sharp edges on the conductor can yield a localized electrical breakdown of the gas stream, known as *corona*, or an electric spark across the gap. Either of these events can transfer charge between the materials, leaving the isolated conductor charged. Such a transfer occurs, for example, where a person wearing nonconductive shoes receives a static electric shock by contacting the metal frame supporting a highly charged web. As a result, the person acquires a net static electric charge and can receive a second shock after leaving the area by touching a grounded metal object, thereby allowing the acquired charge to flow to earth.

5.3.1.2 Charge can also be imparted to a surface or into the bulk of a material by directing a stream of electrons or ions against the surface or the material. If the surface or material is not conductive or is conductive but isolated from ground, the charge delivered by the bombarding stream remains after the stream stops.

5.3.2 Induction Charging of Personnel.

5.3.2.1 If a person walks about, there is a redistribution of static electric charge on the body as he or she approaches and leaves places where there is charge. Here, the term *person* includes the body, clothing, tools, flashlights, pens, and any other articles carried along, as well as the nature of the electrical connections among them. The total charge on the person does not change as he walks around, unless there is passage of charge from the person to the environment, for example, a charged object, the floor, the air, or anything else in the surroundings that becomes a path for charge redistribution.

5.3.2.2 Induction charging of a person can occur in a variety of ways:

(1) *The person touches the charged object.* In this case charge flows between the object and the person, and the person's conductivity gives charge the possibility of being distributed farther from the object.
   (a) If the object is a conductor, charge from its entirety will be reduced by the amount transferred to the person, so that both will end up with the same voltage (potential).
   (b) If the object is an insulator, local discharge will occur and that charge will be distributed to the person. A moving web would be one case in which the local discharges to the person would add up on the person to produce net charging that is similar to that from a conductor. The person would end up with the average voltage (potential) of the web.

(2) *An electrical discharge occurs between the person and the charged object.* The result will be very similar to what happens with direct contact, and in fact, a discharge probably will occur as the person approaches and touches the charged object. The electrical discharge generally occurs from where there is a high concentration of charge — nearby regions on the person or object that are pointed or sharp (e.g., points, corners, or edges). There will be a spark or some form of corona discharge. (See Section 5.5 for descriptions of electrical discharges.)

(3) *Current is conducted through shoes to the floor.* If there is conduction through the shoes, charge will distribute beyond the person, and an equal amount of charge will be conducted to the person to be drawn closer to the charged object. If the shoes or floor are not good conductors, it will take time for the net charge on the person to grow and be lost as the person walks from the area.

Copyright 2014 National Fire Protection Association (NFPA). Licensed, by agreement, for individual use and download on October 4, 2014 to LEADER and READER for designated user PATTARAPORN SRITRAKOOL. No other reproduction or transmission in any form permitted without written permission of NFPA. For inquires or to report unauthorized use, contact licensing@nfpa.org.

(4) *The person touches others, structural steel, tool boxes in the area, etc., or provides other paths for charge to redistribute.* Each of these actions gives a larger area for charge redistribution, and when those paths are broken leaves a net charge on the person. If shoes and floor are nonconductive, the charge will remain on the person when he or she leaves the charged object.

(5) *There is an electrical discharge between the person and something — typically grounded — in the environment.* The discharge can come from the hair, rings, finger nails, conductive clothing, and so forth. In the case of corona, the discharge can be into the air without a nearby grounded surface.

5.3.2.3 The actual redistribution of charge is complex and dynamic, and the net charge on the person changes with time. One must be careful in handling tools and actions performed while working with charged operations in industry. Gravure printing, coating, and finishing with solvent-based materials are particularly hazardous as a result of induction charging. Without good static elimination, pointing a finger at process lines and working with conductive tools can be hazardous. There are numerous opportunities for spark discharges brought on by proximity of workers and charged objects.

5.3.2.4 Pneumatic conveying of bulk solids in nonconductive hoses poses special problems, because charging and discharging along the lines induces complex charges and currents in the work area. The induced charges and currents can be hazardous to workers and electronic equipment.

5.3.2.5 One area often overlooked is the pickup of charge by induction at one workstation, possibly in a nonhazardous area, that is carried to a hazardous location. Appropriate footwear and flooring is advised in the hazardous area.

5.4 Accumulation and Dissipation of Charge.

5.4.1 A static electric charge will accumulate where the rate at which charges separate exceeds the rate at which charges recombine. Work must be done to separate charges, and there is a tendency for the charges to return to a neutral state. The potential difference, that is, the voltage, between any two points is the work per unit charge that would have to be done to move the charges from one point to the other. This work depends on the physical characteristics (that is, shape, size, and nature of materials and location of objects) of the particular system and can be expressed by the following equation:

$$C = \frac{Q}{V}$$

where:
C = capacitance (farads)
Q = charge that has been separated (coulombs)
V = potential difference (volts)

5.4.2 Typical examples of accumulation are illustrated in Figure 5.4.2. *(See also Table A.3.3.5.)*

5.4.3 Separation of electric charge might not in itself be a potential fire or explosion hazard. There must be a discharge or sudden recombination of the separated charges to pose an ignition hazard. One of the best protections from static electric discharge is a conductive or semiconductive path that allows the controlled recombination of the charges.

5.4.4 In static electric phenomena, charge is generally separated by a resistive barrier, such as an air gap or insulation between the conductors, or by the insulating property of the materials being handled or processed. In many applications, particularly those in which the materials being processed are

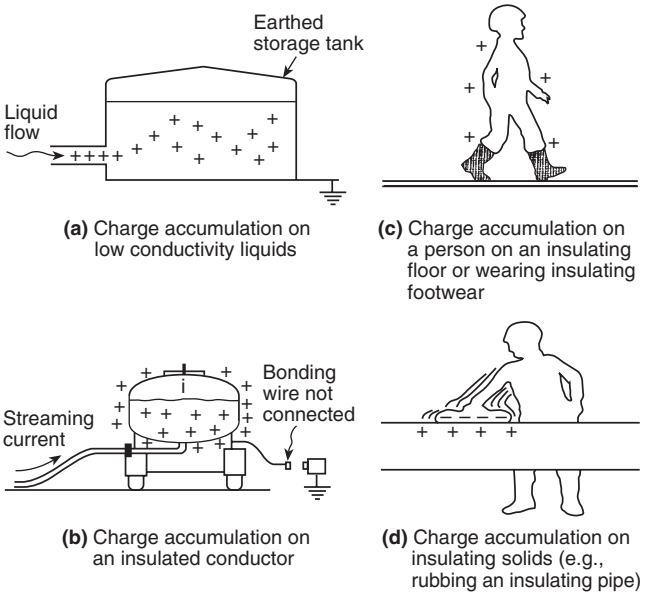

FIGURE 5.4.2 Examples of Charge Accumulation. ***(Source: H. L. Walmsley, "Avoidance of Electrostatic Hazards in the Petroleum Industry," p. 37.)***

charged insulators (nonconductors), it is not easy to measure the charges or their potential differences.

5.4.5 Where recombining of charges occurs through a path that has electrical resistance, the process proceeds at a finite rate, $1/\tau$, and is described by the *charge relaxation time* or *charge decay time,* τ. This relaxation process is typically exponential and is expressed by the following equation:

$$Q_t = Q_0 e^{-t/\tau}$$

where:
Q_t = charge remaining at elapsed time t (coulombs)
Q_0 = charge originally separated (coulombs)
e = base of natural logarithms = 2.718
t = elapsed time (seconds)
τ = charge relaxation time constant (seconds)

5.4.6 The rate of charge recombination depends on the capacitance of the material and its resistance and is expressed as follows:

$$\tau = RC$$

where:
τ = charge relaxation time constant (seconds)
R = resistance (ohms)
C = capacitance (farads)

5.4.7 For bulk materials, the relaxation time is often expressed in terms of the volume resistivity of the material and its electrical permittivity as follows:

$$\tau = \rho\varepsilon$$

where:
τ = charge relaxation time constant (seconds)
ρ = volume resistivity (ohm-meters)
ε = permittivity of material (farads per meter)

5.4.8 The exponential decay model described in 5.4.5 is helpful in explaining the recombination process but is not necessarily applicable to all situations. In particular, nonexponential decay is observed where the materials supporting the

Copyright 2014 National Fire Protection Association (NFPA). Licensed, by agreement, for individual use and download on October 4, 2014 to LEADER and READER for designated user PATTARAPORN SRITRAKOOL. No other reproduction or transmission in any form permitted without written permission of NFPA. For inquires or to report unauthorized use, contact licensing@nfpa.org.

charge are certain low-conductivity liquids or powders composed of combinations of insulating, semiconductive, and conductive materials. The decay in such cases is faster than the exponential model predicts.

5.4.9 Dissipation of static electric charges can be achieved by modifying the volume or surface resistivity of insulating materials with antistatic additives, by grounding isolated conductors, or by ionizing the air near insulating materials or isolated conductors. Air ionization involves introducing mobile electric charges (positive, negative, or both) into the air around the charged objects. The ions are attracted to the charged objects until the charges on the objects are neutralized. The ion current in the air serves as the mechanism that brings the neutralizing charge to the otherwise bound or isolated charge.

5.5 Discharge of Static Electricity and Ignition Mechanisms.

5.5.1 General. As electric charge accumulates through separation, there is an increase in the electrical forces trying to restore a neutral condition by reuniting those charges in the form of a static electric discharge. Many types of discharges can occur and are illustrated broadly in Figure 5.5.1. For a static electric discharge to be a source of ignition, the following four conditions must be met:

(1) An effective means of separating charge must be present.
(2) A means of accumulating the separated charges and maintaining a difference of electrical potential must be available.
(3) A discharge of the static electricity of adequate energy must occur.
(4) The discharge must occur in an ignitible mixture.

5.5.2 Corona Discharge. As defined in 3.3.17.3, corona discharge is a low energy electrical discharge that results from localized electrical breakdown of gases near sharp conductive edges, needle points, and wires. *(See Figure 5.5.2.)*

5.5.2.1 In most cases, the energy density of corona discharge is very low. Consequently, the hazard from corona discharge is small. Where corona discharge is more intense, pre-breakdown streamers called *brush discharges* occur. These appear as random filaments of light that make faint hissing or frying sounds. Brush discharges that originate on needlelike tips with radii smaller than 1 mm do not, in general, lead to ignition. Discharges from blades, however, can ignite mixtures that have very low ignition energies, such as hydrogen–air or carbon disulfide–air mixtures. Gas–air and vapor–air mixtures can be ignited if brush discharges originate from elements with edge diameters greater than 5 mm or from a rod with a hemispherical end, such as a human finger. *(See Figure 5.5.2.1.)*

5.5.2.2 Sharp edges, corners, and projections (e.g., those with an edge diameter of 5 mm or less) that point toward charged surfaces need to be identified because they can concentrate the charge, providing intense, localized stresses that can lead to electrical corona and sparks.

5.5.3 Sparks Between Conductors.

5.5.3.1 Sparks from ungrounded charged conductors, including the human body, are responsible for most fires and explosions ignited by static electricity. Sparks are typically intense capacitive discharges that occur in the gap between two charged conducting bodies, usually metal. The energy of a spark discharge is highly concentrated in space and in time.

5.5.3.2 The ability of a spark to produce ignition is governed largely by its energy, which is some fraction of the total energy stored in the system.

5.5.3.3 The energy of a spark can be determined from the capacitance of the conductive system and the electrical potential or from the quantity of charge separated from the conductors. It is expressed by the equations that follow. These relationships are shown graphically in Figure 5.5.3.3.

$$W = \frac{1}{2}CV^2$$

$$W = \frac{1}{2}QV$$

$$Q = \frac{1}{2}\left(\frac{Q^2}{C}\right)$$

$$Q = CV$$

where:
W = energy (joules)
C = capacitance (farads)
V = potential difference (volts)
Q = charge (coulombs)

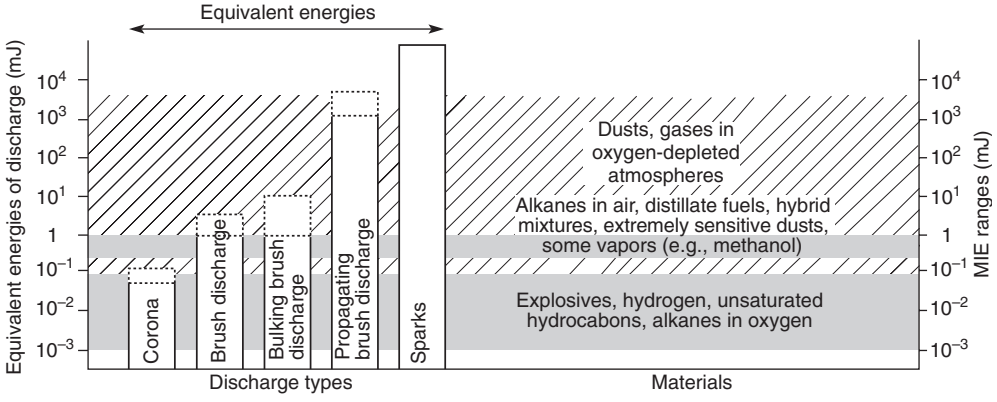

FIGURE 5.5.1 Approximate Energies of Types of Discharges Compared with Minimum Ignition Energies (MIEs) of Typical Combustible Materials. ***(Adapted from H. L. Walmsley, "Avoidance of Electrostatic Hazards in the Petroleum Industry," p. 26.)***

Copyright 2014 National Fire Protection Association (NFPA). Licensed, by agreement, for individual use and download on October 4, 2014 to LEADER and READER for designated user PATTARAPORN SRITRAKOOL. No other reproduction or transmission in any form permitted without written permission of NFPA. For inquires or to report unauthorized use, contact licensing@nfpa.org.

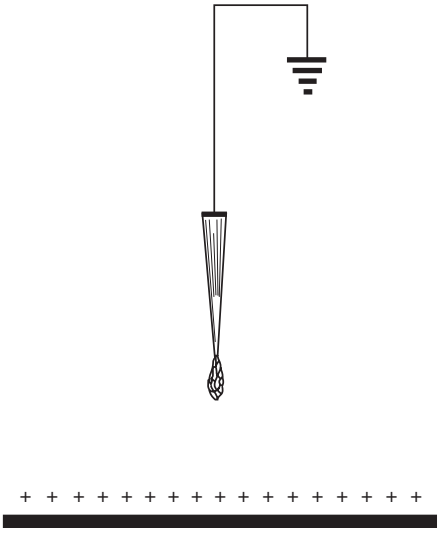

FIGURE 5.5.2 Corona Discharge. *(Source: T. H. Pratt, Electrostatic Ignitions of Fires and Explosions, p. 32.)*

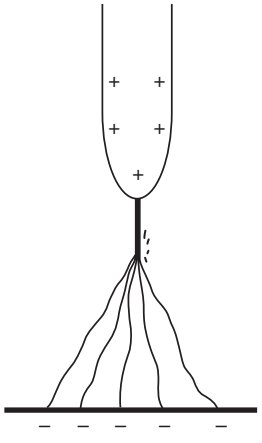

FIGURE 5.5.2.1 Brush Discharge. *(Adapted from H. L. Walmsley, "Avoidance of Electrostatic Hazards in the Petroleum Industry," p. 27.)*

5.5.3.4* To be capable of causing ignition, the energy released in the discharge must be at least equal to the minimum ignition energy (MIE) of the ignitible mixture. Other factors, such as the shape of the charged electrodes and the form of discharge, influence conditions for the static electric discharge and its likelihood of causing ignition.

5.5.3.5 Most gases and vapors of hydrocarbons require about 0.25 mJ of energy for spark discharge ignition, assuming optimum mixtures with air. There are some that require less energy for ignition. Discussion of the minimum ignition energy for specific materials can be found in 9.2.3, 9.2.4, and 15.11.1. *(See Table B.1.)*

5.5.3.6 Mists, dusts, and fibers usually require an MIE that is one or two orders of magnitude greater than that for gases and vapors. It should be noted that, for any given particulate material, the MIE diminishes rapidly with decreasing particle size.

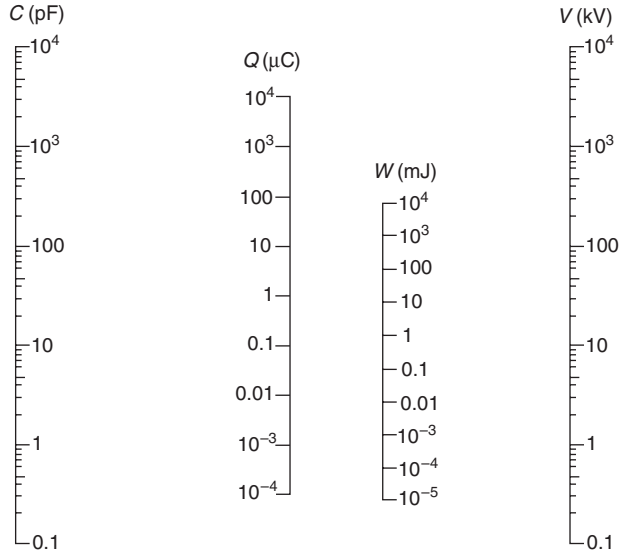

FIGURE 5.5.3.3 Nomograph for Estimating Energy in a Capacitive Spark Discharge. *(Source: T. H. Pratt, Electrostatic Ignitions of Fires and Explosions, p. 113.)*

5.5.3.7 The ignition energies for gases, vapors, and dusts are reduced by an increase in the oxygen concentration relative to that for air. Likewise, ignition energies are increased by a decrease in oxygen concentration.

5.5.4 Hybrid Mixtures. Where two or more flammable materials of different phases (e.g., a dust and a vapor) are present in the same mixture, the mixture is referred to as a *hybrid*. Tests have shown that adding a flammable gas to a dust suspension can greatly lower the ignition energy of the dust. This phenomenon is especially true where the gas is present at a concentration below its lower flammable limit (LFL) or the dust is below its minimum explosible concentration (MEC). Such hybrid mixtures can sometimes be ignited even if both components are below their lower limits. A hybrid mixture can be formed by the following:

(1) Vapor desorption from particulates (such as in resin product receivers)
(2) Reaction of particulates with atmospheric moisture that produces a flammable gas
(3) Introduction of a dust into a flammable vapor atmosphere (such as adding a dust or powder to a flammable liquid)

5.5.5 Static Electric Discharge from the Human Body.

5.5.5.1 The human body is a good electrical conductor and has been responsible for numerous incidents of static electric discharge.

5.5.5.2 A person insulated from ground can accumulate a significant charge by walking on an insulating surface, by touching a charged object, by brushing surfaces while wearing nonconductive clothing, or by momentarily touching a grounded object in the presence of charges in the environment. During normal activity, the potential of the human body can reach 10 kV to 15 kV. At a capacitance of 200 pF *(see Table A.3.3.5)*, the accumulated

Copyright 2014 National Fire Protection Association (NFPA). Licensed, by agreement, for individual use and download on October 4, 2014 to LEADER and READER for designated user PATTARAPORN SRITRAKOOL. No other reproduction or transmission in any form permitted without written permission of NFPA. For inquires or to report unauthorized use, contact licensing@nfpa.org.

energy available for a spark can reach 10 to 22.5 mJ. A comparison of these values to the MIEs of gases or vapors makes the hazard readily apparent.

5.5.6 Discharges Between Conductors and Insulators.

5.5.6.1 Sparks often occur between conductors and insulators. Examples of such occurrences include situations in which plastic parts and structures, insulating films and webs, liquids, and particulate material are handled. The charging of these materials can result in surface discharges and sparks, depending on the accumulated charge and the shape of nearby conductive surfaces. The variable charge density (both in magnitude and polarity) observed on insulating surfaces is the effect of these discharges spreading over a limited part of the insulating surface.

5.5.6.2 Even with the use of static electricity neutralizers, some charges will remain in certain areas but typically are not hazardous if there is no mechanism by which they can accumulate. However, a dangerous (i.e., ignition-capable) static electric charge can result because of concentration of individual charges. Examples of how such concentration of charge can occur include stacking or nesting of empty plastic containers, winding film onto a roll or drum, and filling a vessel with a nonconductive liquid or powder.

5.5.7 Discharge on the Surface of an Insulator Backed by a Conductor. A surface coated with a thin (less than 8 mm) layer of an insulating material will act as a capacitor to store charge. At sufficiently high charge levels (i.e., greater than 250 $\mu C/m^2$), a branching discharge will be observed on the surface of the coating. This branching discharge is referred to as a *propagating brush discharge.* Alternatively, an electrical breakdown through the layer can occur. The energy stored in the coating can be as high as several joules per square meter, so the energy of the discharge, however distributed in space, can be sufficient to ignite gas–air, vapor–air, and dust–air mixtures. *(See Figure 5.5.7.)*

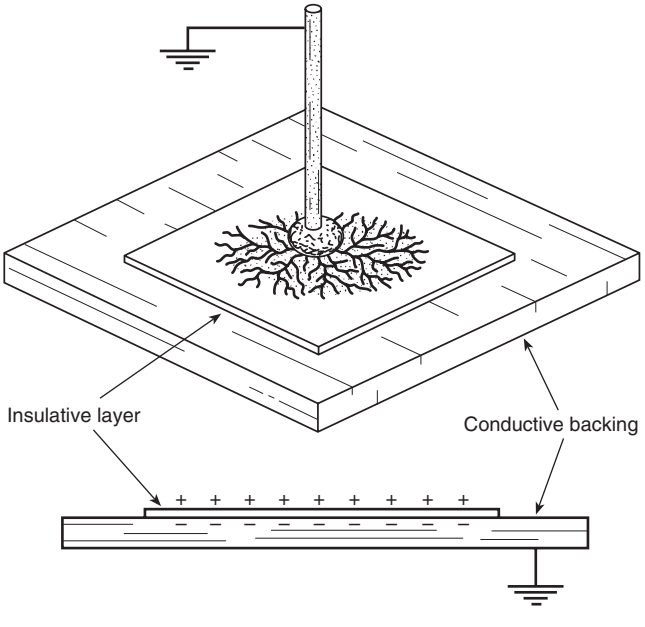

FIGURE 5.5.7 Propagating Brush Discharge. ***(Source: T. H. Pratt, Electrostatic Ignitions of Fires and Explosions, p. 35.)***

Chapter 6 Evaluating Static Electricity Hazards

6.1 General.

6.1.1 There are two basic steps in evaluating static electricity hazards:

(1) Identification of locations where charge separates and accumulates
(2) Assessment of the ignition hazards at the locations where charge separates and accumulates

6.1.2 The evaluation process specified in 6.1.1 is outlined in Figure 6.1.2.

6.1.3 On-site evaluation or survey of the process should be made to identify any ungrounded conductive objects, including personnel, and any materials that could serve as electrical insulators and interfere with proper bonding and grounding. The survey should identify those locations that might pose a static electricity hazard, even if there is no evidence of accumulation of charge at the time of the evaluation.

6.1.3.1 Special attention should be given to insulating materials that are handled or processed.

6.1.3.1.1 Each process operation should be considered separately, and attention should be given to the likely range of exposure of the materials. For example, changes in temperature and relative humidity can significantly influence the bulk conductivity and surface conductivity of materials.

6.1.3.2 It is often helpful to first complete a design review of the operation, process, or machine and a visual survey of the area. An on-site instrumented evaluation should then be conducted during actual operating conditions to determine the nature and magnitude of any static electricity hazards present.

WARNING: During an audit, precautions should be taken that are consistent with the equipment and the materials in the area where measurements are to be taken. The primary ignition hazard comes from introducing a grounded electrode, such as the housing of a field meter *(see Section 6.4)*, into the vicinity of a charged surface, thus providing a route for a static electric discharge. The surface being measured should always be approached slowly during observation of the meter's response. Extreme care should be taken so that neither instruments nor testing techniques cause ignition of flammable atmospheres. Appropriate safe work practices should be employed where measurements are being taken in and around physical hazards such as moving belts, webs, and pulleys.

6.2 Measuring a Static Electric Charge. A meaningful evaluation requires using an appropriate instrument, using the instrument according to the manufacturer's instructions, maintaining calibration of the instrument, and interpreting the measurements according to the manufacturer's recommendations.

6.3 Measuring the Charge on a Conductor.

6.3.1 The voltage on a conductor is proportional to the charge it supports and is expressed by the following equation:

$$V = \frac{Q}{C}$$

where:
V = potential difference (volts)
Q = charge supported by the conductor (coulombs)
C = capacitance of the conductor (farads)

Copyright 2014 National Fire Protection Association (NFPA). Licensed, by agreement, for individual use and download on October 4, 2014 to LEADER and READER for designated user PATTARAPORN SRITRAKOOL. No other reproduction or transmission in any form permitted without written permission of NFPA. For inquires or to report unauthorized use, contact licensing@nfpa.org.

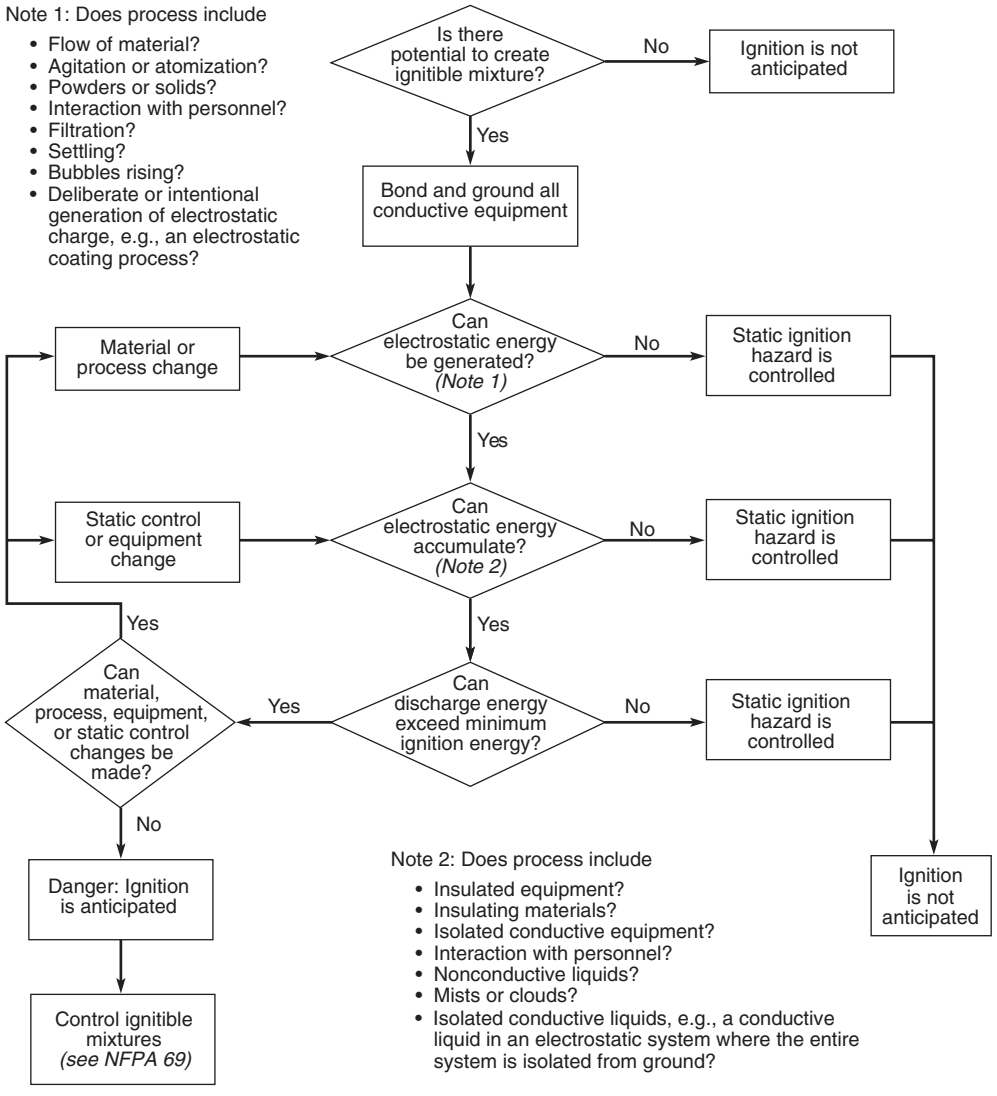

FIGURE 6.1.2 Flow Chart for Determining Static Electric Ignition Hazard. (For recommendations for bonding and grounding, see 7.4.1. For information on controlling ignitible mixtures, see NFPA 69, *Standard on Explosion Prevention Systems*.)

6.3.2 The voltage on a conductor can be measured by direct contact using a voltmeter, provided that the impedance of the voltmeter is high enough so that it does not discharge the conductor and the capacitance is small enough so that it does not collect a significant charge from the conductor. An electrostatic voltmeter with input impedance greater than 10^{12} ohms can be used for measuring voltages on most ungrounded conductors. Because conductors have the same voltage at every point on their surface, the location at which the test probe of the voltmeter touches the surface of the conductor is not important.

6.4 Measuring the Charge on a Nonconductor.

6.4.1 The charge on a nonconductor cannot be measured using a direct contact electrostatic voltmeter. A noncontact electrostatic voltmeter, or field meter, must be used. A noncontact electrostatic voltmeter senses the strength of the static electric field from the net charge on or in the nonconductor. The field strength, which is proportional to the static electric force per unit charge, describes the electric forces present near a charged object. For practical purposes, an electric field is the force that a person experiences or measures around a charged object.

6.4.2 Field meters are calibrated to measure the electric field in units of volts per unit distance, typically kilovolts per meter. In most cases, the measurements are proportional to the net static electric charge on the object being measured. Field meters are referred to as *field mills* or *charge locators*, depending on their principle of operation and level of sophistication. Because the charge density on or in a nonconductor typically is not uniform, measurements should be taken at several locations.

6.4.3 Charged nonconductors exist in many forms, such as sheets, films, webs, powders, liquids, process rolls, and extrusions. Charges on these materials and objects produce electric

Copyright 2014 National Fire Protection Association (NFPA). Licensed, by agreement, for individual use and download on October 4, 2014 to LEADER and READER for designated user PATTARAPORN SRITRAKOOL. No other reproduction or transmission in any form permitted without written permission of NFPA. For inquires or to report unauthorized use, contact licensing@nfpa.org.

fields that are influenced by the instrument, by the observer, and by other nearby conductive, semiconductive, or insulating materials. As a result, the electric field measured by the instrument generally is different from the electric field present before the instrument was introduced. This phenomenon is a result of a change in capacitance.

6.4.4 The forces between electric charges exhibit themselves at a distance. For that reason, the effects of accumulated charge can be observed as the charged objects are approached. For example, the hands and arms of a person who approaches a highly charged object will tingle and might even draw a spark as the surface of the skin and the hair become "charged." Sometimes these observations and sparks provide the first indication that a potentially hazardous condition exists. Charging of the human body can happen even if the person is well grounded.

6.5 General Practices.

6.5.1 The primary instrument for locating a charge on either a conductor or a nonconductor is the noncontact voltmeter or field meter. As its name implies, the instrument does not contact the charged surface directly. Rather, it senses the magnitude and the polarity of the electric field that exists *at its sensing aperture*. As stated in 6.4.3, the instrument and its sensing aperture disturb the electric field around the charge to be measured, so the meter reading does not accurately indicate the actual magnitude of the field where the meter is not present. Aside from that deficiency, the field meter is an inexpensive and valuable tool for locating a static electric charge.

6.5.2 In some cases, primarily cases involving flowing liquids and flowing bulk solids, it is easier to collect a sample of the charged material in an isolated vessel or cup, referred to as a *Faraday cup*, and to use an electrometer to measure the streaming current or net charge flowing to the cup receiving the charged material.

6.6 Measuring the Accumulation and Relaxation of Charge.

6.6.1 Measuring the rate of accumulation and relaxation of static electric charge involves measuring changing potential differences or currents.

6.6.2 Field meters and dedicated charge decay monitors can be used to observe charge relaxation on conductors and nonconductors under conditions of prescribed initial voltages.

6.6.3 Leakage currents down to about 10^{-13} amperes can be measured from isolated conductors using commercially available electrometers. The isolated conductor can be a Faraday cup containing a bulk solid or fluid.

6.7 Measuring the Resistivity of Materials. Electrical resistivity of materials often consists of volume (bulk) and surface components. In electrostatic processes, the approximate ranges of resistivities that define materials as insulating, semiconductive (antistatic), or conductive are summarized in Figure 6.7.

6.7.1 Electric charges can be conducted from a solid, liquid, or powder, either across the surface or through the material.

6.7.2 The volumetric resistivity of a material can be determined by applying a potential difference across a sample of known cross section and monitoring the current through the cross section.

6.7.3 Adsorbed material, particularly water vapor, and compaction of materials are known to lower the resistivity of materials. The resistivity of many materials also has been found to vary with the applied potential difference and with the duration of the test. Various designs of cells used to measure resistivity have been developed into standard test configurations that are applicable to specific kinds of samples. Appropriate test procedures include the following:

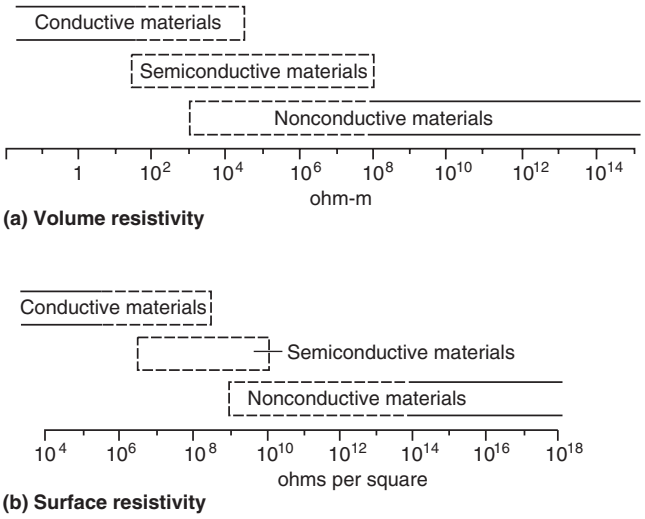

FIGURE 6.7 Ranges of Volume and Surface Resistivities. ***(Source: H. L. Walmsley, "Avoidance of Electrostatic Hazards in the Petroleum Industry," p. 138.)***

(1) ASTM D 257, *Standard Test Methods for DC Resistance or Conductance of Insulating Materials*
(2) CENELEC EN 61241-2-2, *Electrical Apparatus for Use in the Presence of Combustible Dust — Part 2: Test Methods; Section 2: Method for Determining the Electrical Resistivity of Dust in Layers*
(3) JIS B 9915, *Measuring Methods for Dust Resistivity (with Parallel Electrodes)*

6.8 Assessment of Conduction Paths.

6.8.1 As defined in 3.3.2, *bonding* is a process whereby two or more conductive objects are connected by means of a conductor so that they are at the same electrical potential; that is, the voltage difference between the objects is zero (0). The objects might or might not be at the same potential as the earth. In fact, a considerable potential difference between the objects and the earth could exist.

6.8.2 As defined in 3.3.22, *grounding* is the process of bonding one or more conductive objects to the earth so that they are all at zero (0) electrical potential.

6.8.3 In both bonding and grounding, the intent is to eliminate the occurrence of a static electric spark.

6.8.4 Identification of conductive equipment and objects within a process is critical for successful bonding and grounding. Periodic inspection and testing of bonding and grounding systems are equally important. Proper inspection and testing ensure that the chances for a static electric charge to accumulate are minimized. In bonding and grounding installations that are prone to corrosion, movement, or insulating surface coatings, self-testing bonding clamps and systems can be used to continuously test the resistance to ground and verify acceptable levels.

6.8.5 The resistance to ground of the bonding or grounding path is important, not only to ensure relaxation of the static

Copyright 2014 National Fire Protection Association (NFPA). Licensed, by agreement, for individual use and download on October 4, 2014 to LEADER and READER for designated user PATTARAPORN SRITRAKOOL. No other reproduction or transmission in any form permitted without written permission of NFPA. For inquires or to report unauthorized use, contact licensing@nfpa.org.

electric charge but also to maintain worker safety and satisfy other purposes, such as for lightning protection and electrical system shock protection. Practices that constitute proper resistance to ground vary from application to application. Chapters 7 through 16 provide examples of acceptable grounding practices.

6.8.6 The resistance to ground is measured with an ohmmeter or a megohmmeter. Care should always be taken to avoid ignition by using appropriate instruments or procedures, based on the classification of the area.

6.9 Measuring Spark Discharge Energies.

6.9.1 The spark discharge energy for conductors is determined from the voltage on the conductor and its capacitance and is expressed by the following equations (which were also given in 5.5.3.3):

$$W = \frac{1}{2}CV^2$$

$$W = \frac{1}{2}\left(\frac{Q^2}{C}\right)$$

where:
W = energy (joules)
C = capacitance (farads)
V = potential difference (volts)
Q = charge (coulombs)

6.9.2 A capacitance meter often can be used to measure electrostatic charge storage capacity where the charge is stored on a conductive element.

6.10 Measuring Ignition Energies.

6.10.1 Any combustible solid (dust), liquid (vapor), or gas should be evaluated for its potential as an ignitible atmosphere in the presence of discharges of static electricity. This evaluation requires determining the MIE of the material. Some data on MIE can be found in Table B.1.

6.10.2 Standardized test equipment and procedures have been developed for measuring the MIEs of particulate and gaseous materials. The equipment is highly specialized and requires trained technicians for its operation. Typically, the equipment is operated and maintained by specialized testing firms.

Chapter 7 Control of Static Electricity and Its Hazards by Process Modification and Grounding

7.1 General.

7.1.1 The objective of controlling a static electricity hazard is to provide a means whereby charges, separated by whatever cause, can recombine harmlessly before discharges can occur.

7.1.2 Ignition hazards from static electricity can be controlled by the following methods:

(1) Removing the ignitible mixture from the area where static electricity could cause an ignition-capable discharge
(2) Reducing charge generation, charge accumulation, or both by means of process or product modifications
(3) Neutralizing the charges, the primary methods of which are grounding isolated conductors and air ionization
(4) Operating outside the flammable range

7.2 Control of Ignitible Mixtures in Equipment.

7.2.1 General. Despite efforts to prevent accumulation of static electric charges through good design, many operations that involve the handling of nonconductive materials or nonconductive equipment do not lend themselves to engineered solutions. It then becomes desirable or essential, depending on the nature of the materials involved, to provide other measures, such as one of the following:

(1) Inerting of the equipment
(2) Ventilation of the equipment or the area in which it is located
(3) Relocation of the equipment to a safer area

7.2.2 Inerting.

7.2.2.1* Where an ignitible mixture is contained, such as in a processing vessel, the atmosphere can be made oxygen deficient by introducing enough inert gas (e.g., nitrogen or combustion flue gas) to make the mixture nonignitible. This technique is known as *inerting*. NFPA 69, *Standard on Explosion Prevention Systems*, contains requirements for inerting systems.

7.2.2.2 Where operations are normally conducted in an atmosphere containing a mixture above the upper flammable limit (UFL), it might be practical to introduce the inert gas only during those periods when the mixture passes through its flammable range.

7.2.3 Ventilation. Mechanical ventilation can be used to dilute the concentration of a combustible material to a point well below its lower flammable limit (LFL), in the case of a gas or vapor, or below its minimum explosible concentration (MEC), in the case of a dust. Usually, such a reduction means dilution to a concentration at or below 25 percent of the lower limit. Also, by properly directing the air movement, it might be practical to prevent the material from approaching an area of operation where an otherwise uncontrollable static electricity hazard exists.

7.2.4 Relocation. Where equipment that can accumulate a static electric charge is unnecessarily located in a hazardous area, it might be possible to relocate it to a safe location rather than to rely on other means of hazard control.

7.3 Control of Generation of Static Electric Charge. Electric charges separate where materials are placed in contact and then pulled apart. Reducing process speeds and flow rates reduces the rate of charge generation. Such charge separation is found where plastic parts and structures, insulating films and webs, liquids, and particulate material are handled. If the material flows at a slow enough rate, a hazardous level of excess charge does not normally accumulate. This means of static electricity control might not be practical due to processing requirements. *(See Chapters 9 through 16 for recommended practices in specific applications.)*

7.4 Charge Dissipation.

7.4.1 Bonding and Grounding. Bonding is used to minimize the potential difference between conductive objects, even where the resulting system is not grounded. Grounding (i.e., earthing), on the other hand, equalizes the potential difference between the objects and the earth. Examples of bonding and grounding are illustrated in Figure 7.4.1.

7.4.1.1 A conductive object can be grounded by a direct conductive path to earth or by bonding it to another conductive object that is already connected to the ground. Some objects are inherently bonded or inherently grounded because of

Copyright 2014 National Fire Protection Association (NFPA). Licensed, by agreement, for individual use and download on October 4, 2014 to LEADER and READER for designated user PATTARAPORN SRITRAKOOL. No other reproduction or transmission in any form permitted without written permission of NFPA. For inquires or to report unauthorized use, contact licensing@nfpa.org.

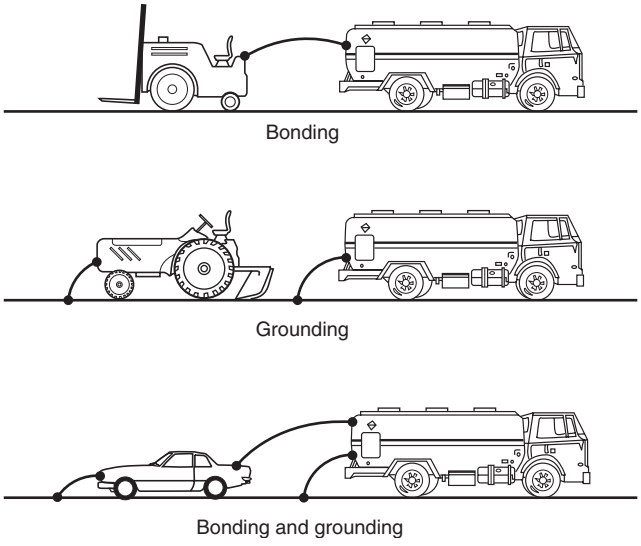

FIGURE 7.4.1 Bonding and Grounding.

their contact with the ground. Examples of inherently grounded objects are underground metal piping and large metal storage tanks resting on the ground.

7.4.1.2 The total resistance between a grounded object and the soil is the sum of the individual resistances of the ground wire, its connectors, other conductive materials along the intended grounding path, and the resistance of the ground electrode (i.e., ground rod) to the soil. Most of the resistance in a ground connection exists between the ground electrode and the soil. This ground resistance is quite variable because it depends on the area of contact, the resistivity of the soil, and the amount of moisture present in the soil.

7.4.1.3 To prevent the accumulation of static electricity in conductive equipment, the total resistance of the ground path to earth should be sufficient to dissipate charges that are otherwise likely to be present. A resistance of 1 megohm (10^6 ohms) or less generally is considered adequate.

7.4.1.3.1 Where the bonding/grounding system is all metal, resistance in continuous ground paths typically is less than 10 ohms. Such systems include those having multiple components. Greater resistance usually indicates that the metal path is not continuous, usually because of loose connections or corrosion. A permanent or fixed grounding system that is acceptable for power circuits or for lightning protection is more than adequate for a static electricity grounding system.

7.4.1.3.1.1 In field-based situations such as HAZMAT hazardous response operations or flammable/combustible materials spill control and transfer, it might be necessary to establish a temporary or emergency grounding system in a remote location in order to dissipate static charges. In such situations, various types of conductive grounding electrodes can be used, such as rods, plates, and wires, which are sometimes used in combination to increase surface area contact with the earth. If the purpose of the temporary grounding system is to dissipate static electricity, a total resistance of up to 1 kohm (1000 ohms) in the ground path to earth is considered adequate. This can be measured using standard ground resistance testing instruments and is realistically and quickly achievable in most types of terrain and weather conditions.

7.4.1.3.2 Annex G contains diagrams of various grounding devices, connections, and equipment.

7.4.1.4 Where wire conductors are used, the minimum size of the bonding or grounding wire is dictated by mechanical strength, not by its current-carrying capacity. Stranded or braided wires should be used for bonding wires that will be connected and disconnected frequently. *(See Annex G for additional information.)*

7.4.1.5 Although grounding conductors can be insulated (e.g., a jacketed or plastic-coated cable) or uninsulated (i.e., bare conductors), uninsulated conductors should be used because defects are easier to detect.

7.4.1.6 Permanent bonding or grounding connections can be made by brazing or welding. Temporary connections can be made using bolts, pressure-type ground clamps, or other special clamps. Pressure-type clamps should have sufficient pressure to penetrate any protective coating, rust, or spilled material to ensure contact with the base metal.

7.4.1.7 Workers should be grounded only through a resistance that limits the current to ground to less than 3 mA for the range of voltages experienced in the area. This method, referred to as *soft grounding*, is used to prevent injury from an electric shock from line voltages or stray currents.

7.4.2 Humidification.

7.4.2.1 The surface resistivity of many materials can be controlled by the humidity of the surroundings. At humidities of 65 percent and higher, the surface of most materials adsorbs enough moisture to ensure a surface conductivity that is sufficient to prevent accumulation of static electricity. When the humidity falls below about 30 percent, these same materials could become good insulators, in which case accumulation of charge occurs.

7.4.2.2 While humidification does increase the surface conductivity of the material, the charge will dissipate only if there is a conductive path to ground.

7.4.2.3 Humidification is a not a cure-all for static electricity problems. Some insulators do not adsorb moisture from the air; therefore, high humidity will not noticeably decrease their surface resistivity. Examples of such insulators are uncontaminated surfaces of some polymeric materials, such as plastic piping, containers, and films, and the surface of petroleum liquids. These surfaces are capable of accumulating a static electric charge even when the atmosphere has a humidity of 100 percent.

7.4.3 Charge Relaxation and Antistatic Treatments.

7.4.3.1 Based on their properties, liquid and solid materials carrying a static electric charge need time to dissipate, or "relax," the charge. In some cases, the materials can be allowed sufficient time for the charges to relax before being introduced into a hazardous area or process.

7.4.3.2 Charge relaxation can occur only if a path to ground for conduction of the charge is available. Increasing the conductivity of the material will not eliminate hazards if the material remains isolated from ground.

7.4.3.3 A nonconductive material often can be made sufficiently conductive to dissipate static electric charge, either by adding conductive ingredients to its composition or by applying hygroscopic agents to its surface to attract atmospheric moisture.

Copyright 2014 National Fire Protection Association (NFPA). Licensed, by agreement, for individual use and download on October 4, 2014 to LEADER and READER for designated user PATTARAPORN SRITRAKOOL. No other reproduction or transmission in any form permitted without written permission of NFPA. For inquires or to report unauthorized use, contact licensing@nfpa.org.

7.4.3.4 Carbon black can be added to some plastics or rubbers to increase conductivity. Carbon-filled plastics and rubber articles are sometimes sufficiently conductive to be grounded like metal objects. Antistatic additives can also be mixed with liquid and particulate streams to foster charge relaxation.

7.4.3.5 In some cases, particularly with plastic films or sheeting, a material is added to attract atmospheric moisture to the surface, thus increasing surface conductivity. Care should be taken where antistatic plastic film or sheeting is used in low-humidity conditions. In environments with less than 30 percent humidity, film or sheeting can become nonconductive and accumulate static electric charge.

7.4.3.6 Topical hygroscopic coatings attract atmospheric moisture and make the surface of the coated material conductive. However, such coatings can be easily washed away or rubbed off or can lose effectiveness over time. This type of coating should be considered only as a temporary measure to reduce accumulation of static electric charge.

7.4.3.7 Conductive polymers, laminates with conductive elements, and metallized films, along with permanent, inherently dissipative polymer (IDP) additives that do not depend on moisture to impart dissipative properties, have been developed for improved dissipation of static electric charge.

Chapter 8 Control of Static Electricity and Its Hazards by Static Eliminators and Personnel Factors

8.1 Charge Neutralization by Ionization of Air.

8.1.1 General. Charges on nonconductive surfaces can be neutralized by devices that produce oppositely charged air ions via corona discharge. If such air ionizers are used, certain factors influence their effectiveness and must be considered. These factors might be environmental conditions (e.g., dust and temperature) and positioning of the device in relation to the material processed, machine parts, and personnel. It is important to note that these control devices do not prevent the generation of static electric charge. They provide ions of opposite polarity to neutralize the generated static electric charge.

8.1.2 Inductive Neutralizers.

8.1.2.1 Inductive neutralizers include the following:

(1) Needle bars, which are metal bars equipped with a series of needlelike emitters
(2) Metal tubes wrapped with metal tinsel
(3) Conductive string
(4) Brushes made with metal fibers or conductive fibers

8.1.2.2 The design of each type of inductive neutralizer is based on or consists of sharply pointed elements arranged for placement in the static electric field near the charged surfaces.

8.1.2.3 A charge drawn from ground to the needlelike tips of an inductive neutralizer produces a concentrated electric field at the tips. If the tips are sharply pointed, the electrical field will be sufficient (i.e., greater than 3 kV/mm) to produce a localized electrical breakdown of the air. This electrical breakdown, known as corona, injects ions into the air that are free to move to distant charges of opposite polarity. The flow of ions produced in corona constitutes a neutralizing current. *(See Figure 8.1.2.3.)*

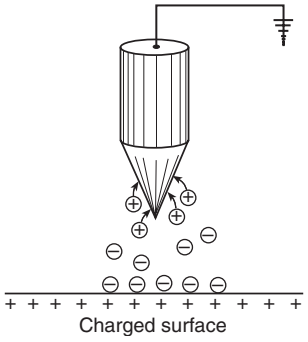

FIGURE 8.1.2.3 Example of an Induction Needle.

8.1.2.4 Although inexpensive and easy to install, inductive neutralizers require a minimum potential difference between the object and the needle tip to initiate corona and the neutralizing process. In the absence of this minimum charge, neutralization will not occur, and a residual potential of a few thousand volts will be left on the material where sharp inductive points are within about 12 mm of the surface.

8.1.2.5 It is critically important that inductive neutralizers are connected to a secure ground. If the inductive neutralizer is not grounded, sparks from the induction bar can occur.

8.1.3 Active Electric Static Neutralizers.

8.1.3.1 Electrically powered static neutralizers use a high-voltage power supply to produce corona from sharp electrodes. The charge on any object near the device attracts oppositely charged air ions produced by the device to achieve neutralization. The use of a high-voltage power supply eliminates the limitation of inductive neutralizers in control of charges having fields below the corona onset threshold.

8.1.3.2 An electrically powered static neutralizer can create sparks and must be approved for the location in which it is used. It must not constitute a source of ignition. For example, when not energized or in case of failure, it can be designed to function as an induction neutralizer.

8.1.3.3 Electrically powered static neutralizers using alternating current use a high-voltage power supply to energize the corona electrodes at 50 Hz to 60 Hz. The use of an alternating field stresses the electrodes to produce both positive and negative ions for use in the neutralizing process. Current from the power supply is capacitive-coupled to each or to several of the sharp electrodes to limit spark energy in the event of a short circuit. An electric static neutralizer must be suitable for the location in which it is used and must not constitute a source of ignition.

8.1.3.4 Electric static neutralizers that use pulsed or steady-state double-polarity direct current use a pulsed or steady field to stress the electrodes to produce ions for use in the neutralizing process. In the event of a short circuit, the spark energy is controlled by current-limiting resistors. Pulsed or double-polarity dc ionizers must be suitable for the location in which they are used and must not constitute a source of ignition.

8.1.4 Active Radioactive Static Neutralizers. Radioactive (nuclear) ionizers use ionizing radiation to produce ions for neutralization of static electric charges. The most common radioactive ionizers depend on alpha particle generation from the decay of polonium-210 (^{210}Po).

Copyright 2014 National Fire Protection Association (NFPA). Licensed, by agreement, for individual use and download on October 4, 2014 to LEADER and READER for designated user PATTARAPORN SRITRAKOOL. No other reproduction or transmission in any form permitted without written permission of NFPA. For inquires or to report unauthorized use, contact licensing@nfpa.org.

8.1.4.1 Performance of radioactive ionizers deteriorates with the decay of the radioactive material. The neutralizers must be registered and installed in accordance with Nuclear Regulatory Commission regulations and replaced periodically (at least annually), because ionization capability diminishes with radioactive decay. Radioactive ionizers are often used in conjunction with inductive neutralizers to control high charge densities.

8.1.4.2 Although cost and regulatory compliance issues are associated with radioactive ionizers, they are nonincendive, require no wiring, and can reduce static electric charges to the lowest levels.

8.2 Control of Static Electric Charge on Personnel. The human body is an electrical conductor and can accumulate a static charge if insulated from ground. This charge can be generated by contact and separation of footwear with floor coverings, by induction, or by participation in various manufacturing operations. Where ignitible mixtures exist, the potential for ignition from the charged human body exists, and means to prevent accumulation of static electric charge on the human body might be necessary.

8.2.1 Prevention of Charge Accumulation. Steps to prevent charge accumulation include use of the following:

(1) Conductive or static dissipative flooring and footwear
(2) Personnel-grounding devices
(3) Antistatic or conductive clothing

8.2.2 Conductive and Static Dissipative Flooring and Footwear.

8.2.2.1 Conductive or static dissipative flooring can provide effective dissipation of static electricity from personnel who are adequately bonded to the floor. Materials can be solid or can be coatings that are selected on the basis of wear characteristics, chemical resistance, and the floor area that needs to be covered. Small areas can be handled with a grounded metal plate. Resistance to ground for flooring systems should be less than 10^8 ohms. Clean uncoated concrete floors typically have a resistance to ground of 10^6 to 10^8 ohms. Accumulation of debris, wax, and other high-resistivity materials will compromise the conductivity of the floor. Floors should be routinely measured to confirm that they have acceptable resistance to ground.

8.2.2.2* Static dissipative (SD) footwear used in conjunction with conductive or static dissipative flooring provides a means to control and dissipate static electric charges from the human body. Resistance to earth through static dissipative footwear and conductive or static dissipative flooring should be between 10^6 ohms and 10^8 ohms. For materials with very low ignition energies, the resistance to earth through footwear and flooring should be less than 10^6 ohms. Resistance should be measured with commercially available footwear conductivity testers.

8.2.2.3 Resistance of footwear can increase with accumulation of debris such as wax or other nonconductive deposits on the sole of the footwear or on the flooring itself, the use of orthopedic foot beds or orthotic devices, and reduced floor contact area. Resistance of footwear should be tested on a periodic basis to confirm functionality.

8.2.2.4 Conductive footwear is footwear designed to have a resistance to ground through the footwear and the floor of less than 10^6 ohms. It is typically used where materials of low ignition energy, such as explosives and propellants, are handled. Conductive footwear should not be used where a possibility for electrocution by line voltages exists.

8.2.3* Personnel Grounding Devices.

8.2.3.1 Where static dissipative footwear will not provide adequate personnel grounding, supplementary devices should be used. Such devices include wrist straps, heel/toe grounders, and conductive overshoes.

8.2.3.2 Supplementary devices should be selected so that accumulation of hazardous static electric charge is prevented, while the risk of electrocution is not increased. In most practical situations, grounding of personnel is achieved by ensuring that the resistance from the skin to ground is approximately 10^8 ohms or less. The need to protect against electrocution via a grounding device imposes a minimum resistance from skin to ground of 10^6 ohms. Based on skin contact and contact with the floor, especially during activities where the entire sole of the footwear is not in contact with the floor (e.g., kneeling), effectiveness can be compromised.

8.2.3.3 The simplest type of commercial device is a grounding bracelet with a built-in resistor typically giving a resistance to ground of about 10^6 ohms for shock protection. Wrist straps of this type have the greatest utility at ventilation hoods and at other locations where limitation on the operator's mobility can be tolerated. Breakaway wrist tether systems could be necessary where emergency egress is needed. A hood can be equipped with two external coiled grounding cords with cuff attachments that can be removed and kept by individual users.

8.2.3.4 Continuity to ground should be checked periodically to the manufacturer's specified limits using a voltmeter or volt ohmmeter or a commercial tester.

8.2.4 Antistatic or Conductive Clothing.

8.2.4.1 Although silk and most synthetic fibers are excellent insulators and undergarments made from these materials exhibit static phenomena, no conclusive evidence exists to indicate that wearing such undergarments constitutes a hazard. However, removal of outer garments is particularly hazardous in work areas, such as in hospital operating rooms, explosives manufacturing facilities, and similar occupancies and where clothing is contaminated by flammable liquids. Outer garments used in such areas should be suitable for the work area and should be antistatic.

8.2.4.2* Although the likelihood of ignition by a grounded person due to any type of clothing is usually very low, the charging of personnel (e.g., where personnel are getting out of a forklift truck) is greatly increased by clothing that has high resistivity.

8.2.4.3* In oxygen-enriched atmospheres, such as those that could be present in liquid oxygen filling plants, vapor from the cooled gas can permeate an employee's clothing, increasing its combustibility. A static electric charge that accumulates on the employee and then suddenly discharges can ignite the clothing.

8.2.5 Gloves. Gloves should be antistatic or conductive with the same resistivity as prescribed for footwear. Gloves should be tested in conjunction with the footwear.

8.2.6 Cleaning or Wiping Cloths.

8.2.6.1 Synthetic fabrics used in cleaning or wiping cloths can develop sufficient static electric charge to produce discharges capable of igniting solvent vapors. Flammable liquids and combustible liquids used at temperatures above their flash

Copyright 2014 National Fire Protection Association (NFPA). Licensed, by agreement, for individual use and download on October 4, 2014 to LEADER and READER for designated user PATTARAPORN SRITRAKOOL. No other reproduction or transmission in any form permitted without written permission of NFPA. For inquires or to report unauthorized use, contact licensing@nfpa.org.

points, where used with synthetic cleaning or wiping cloths, increase the risk of fire. Typically, charge generation increases with the speed and vigor of the wiping action. The material being cleaned or wiped, if nonconductive, also can accumulate a charge, which might be capable of causing ignition.

8.2.6.2 Cotton or synthetic fabric treated with an antistatic compound should be used if static electric charge generation needs to be controlled, especially if flammable solvents are being used for cleaning or wiping. Conductive solvents should be used.

8.3 Maintenance and Testing. All provisions for control of personnel static electricity should be maintained and tested to remain effective.

8.4 Discomfort and Injury. Static shock can result in discomfort and, under some circumstances, injury. While the discharge itself typically is not dangerous to humans, it can cause an involuntary reaction that results in a fall or entanglement with moving machinery. If charge accumulation cannot be avoided and no flammable gases or vapors are present, consideration should be given to the various methods by which contact with metal parts can be eliminated. Such methods include use of nonmetal handrails, insulated doorknobs, and other nonconductive shields. Any spark or shock to personnel should be investigated.

Chapter 9 Flammable and Combustible Liquids and Their Vapors

9.1 General. This chapter discusses the assessment and control of static electricity hazards involved with the storage, handling, and use of flammable and combustible liquids and their vapors and mists. While focused on flammable and combustible liquids, the principles of this chapter also apply to noncombustible liquids and vapors (e.g., wet steam) where their storage, use, and handling can cause a static electricity ignition hazard. The chapter begins with a discussion of the combustion characteristics of liquids and their vapors and mists, followed by a discussion of charge generation and dissipation in liquids. Emphasis is then given to processes involving the following:

(1) Flow in pipe, hose, and tubing
(2) Storage tanks
(3) Loading and unloading of tank vehicles
(4) Vacuum trucks
(5) Railroad tank cars
(6) Marine vessel and barge cargo tanks
(7) Process vessels
(8) Gauging and sampling
(9) Tank cleaning
(10) Portable tanks and containers
(11) Vacuum cleaning

9.1.1 Static control measures need to be taken wherever ignitible mixtures might present. Conversely, if ignitible mixtures can be ruled out, these measures are not required. However, careful evaluation is required to rule out the possibility of ignitible mixtures under all conditions (see Section 9.2). Also, some operations pose a risk of shocks to people (see Section 8.4); in such cases, bonding and grounding will usually correct the problem.

9.2 Combustion Characteristics of Liquids, Vapors, and Mists. The following combustion properties of liquids need to be understood to properly assess the static electricity ignition hazard:

(1) Flash point
(2) Flammable limit and vapor pressure
(3) Ignition energy
(4) Oxidant concentration

9.2.1 Flash Point.

9.2.1.1* Flash point is the minimum temperature at which a liquid gives off sufficient vapor to form an ignitible mixture with air near the surface of the liquid, as determined using standard flash point apparatus described in ASTM E 502, *Standard Test Method for Selection and Use of ASTM Standards for the Determination of Flash Point of Chemicals by Closed Cup Methods.* Selection of test procedures and apparatus depends on other physical characteristics of the liquid. For reasons discussed in A.9.2.1.2, ignition might occur at temperatures lower than the reported flash point.

9.2.1.2* If the flash point of a liquid is at or below typical ambient temperatures, it is likely to evolve an ignitible vapor. The lower the flash point, the higher the vapor pressure and the more likely that an ignitible vapor concentration will be present. Because of the inherent errors in standard flash point measurements, an allowance of at least 5°C to 11°C below the published flash point should be made in the evaluation of an ignition hazard. A minimum safety factor of 5°C is appropriate for single-component liquids having well-defined flash points. The higher minimum safety factor of 11°C is appropriate for mixed liquids of less certain composition, such as fuels.

9.2.1.3 Operations at high elevations, such as mining operations, require an additional safety factor, depending on the elevation. The recommended additional safety factor for each 1000 m above sea level is 2.6°C for complex fuels, such as diesel fuels, and 1.9°C, for pure liquids, such as toluene and ethanol. Elevations below 1000 m can be neglected, because the additional correction factor is no greater than the typical error of a flash point measurement of a given sample.

9.2.1.4 In addition to the conditions described in 9.2.1.2, the following circumstances also can generate an ignitible vapor:

(1) Off-gassing of flammable vapors from solids or low-volatility liquids
(2) Switch loading
(3) Flow through common vapor headers
(4) Processing at pressures below atmospheric pressure
(5) Nonhomogeneity of the vapors above the liquid
(6) Mist, droplets, or foam on the surface of a liquid

(A) The term *switch loading* describes a situation that warrants special consideration. When a tank is emptied of a cargo of Class I liquid, a mixture of vapor and air is left, which can be, and often is, within the flammable range. When such a tank is refilled with a Class I liquid, any charge that reaches the tank shell will be bled off by the required bond wire. Also, there will be no flammable mixture at the surface of the rising oil level because the Class I liquid produces at its surface a mixture too rich to be ignitible. This is the situation commonly existing in tank vehicles in gasoline service. If, as occasionally happens, a static charge does accumulate on the surface sufficient to produce a spark, it occurs in a too-rich, nonignitible atmosphere and thus causes no harm. [**30:**A.28.11.3]

(B) A very different situation arises if the liquid is "switch loaded," that is, when a Class II or Class III liquid is loaded into a tank vehicle that previously contained a Class I liquid. Class II or Class III liquids are not necessarily more potent static electric generators than the Class I liquid previously loaded, but the atmosphere in contact with the rising oil surface is not

Copyright 2014 National Fire Protection Association (NFPA). Licensed, by agreement, for individual use and download on October 4, 2014 to LEADER and READER for designated user PATTARAPORN SRITRAKOOL. No other reproduction or transmission in any form permitted without written permission of NFPA. For inquires or to report unauthorized use, contact licensing@nfpa.org.

enriched to bring it out of the flammable range. If circumstances are such that a spark should occur either across the oil surface or from the oil surface to some other object, the spark occurs in a mixture that can be within the flammable range, and an explosion can result. [**30:**A.28.11.3]

(C) It is emphasized that bonding the tank to the fill stem is not sufficient; a majority of recorded explosions have occurred when it was believed the tank had been adequately bonded. The electrostatic potential that is responsible for the spark exists inside the tank on the surface of the liquid and cannot be removed by bonding. Measures to reduce this charge can be one or more of the following:

(1) Avoid spark promoters. Conductive objects floating on the oil surface increase the charge of sparking to the tank wall. Metal gauge rods or other objects projecting into the vapor space can create a spark gap as the rising liquid level approaches the projection. A common precaution is to require that fill pipes (downspouts) reach as close to the bottom of the tank as practicable. Any operation such as sampling, taking oil temperature, or gauging that involves lowering a conductive object through an opening into the vapor space on the oil should be deferred until at least 1 minute after flow has ceased. This will permit any surface charge to relax.
(2) Reduce the static generation by one or more of the following:
   (a) Avoid splash filling and upward spraying of oil where bottom filling is used.
   (b) Employ reduced fill rates at the start of filling through downspouts, until the end of the spout is submerged. Some consider 3 ft/sec (0.9 m/sec) to be a suitable precaution.
   (c) Where filters are employed, provide relaxation time in the piping downstream from the filters. A relation time of 30 seconds is considered by some to be a suitable precaution.
(3) Eliminate the flammable mixture before switch loadings by gas freeing or inerting.

[**30:**A.28.11.3]

9.2.1.5 For additional information, see Annex C.

9.2.2* Flammable Limits and Vapor Pressure. Vapors or gases in air are flammable only between certain concentrations — the lower flammable limit (LFL) and the upper flammable limit (UFL). The concentrations between these limits constitute the flammable range. Below the LFL, vapors are too lean to burn; above the UFL, they are too rich to burn. Both increased pressure (above atmospheric pressure) and increased temperature widen the flammability range of typical hydrocarbons.

9.2.3 Ignition Energy. The energy needed to ignite a vapor–air mixture varies with the concentration. For most materials, the lowest ignition energy value occurs at a concentration near the midpoint between those for the LFL and UFL. The lowest value is referred to as the minimum ignition energy (MIE). Some MIEs are given in Section B.1. Figure 9.2.3 illustrates a typical relationship between ignition energy and concentration.

9.2.4* Oxidant Concentration. Combustibility is normally determined for atmospheric air, which contains 21 percent oxygen. With an oxygen-enriched atmosphere, the flammable range expands; that is, the LFL decreases and the UFL increases. If the oxygen concentration is sufficiently reduced by inerting, however, an oxygen concentration below which no ignition is possible is reached. This concentration is referred to as the *limiting oxygen concentration* (LOC). By effectively inerting to below the LOC, the hazard of ignition can be eliminated, as explained in NFPA 69, *Standard on Explosion Prevention Systems.* Other oxidants, if present in the mixture, can be addressed similarly. Laboratory testing might be required to evaluate the hazard.

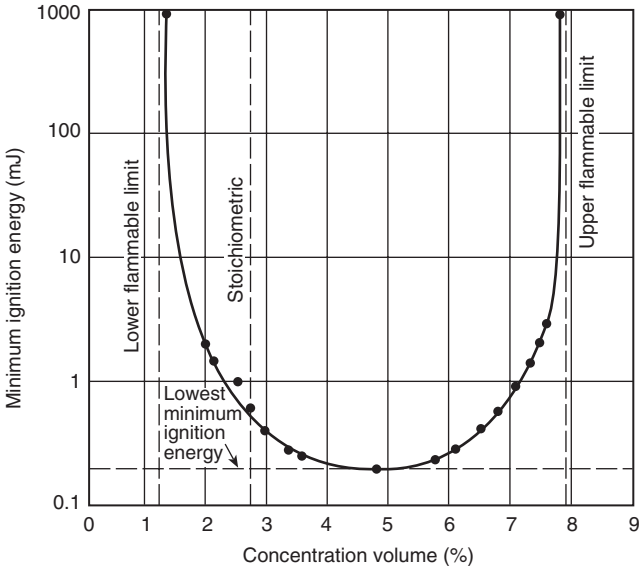

FIGURE 9.2.3 Minimum Ignition Energy (MIE) of Benzene as a Function of Concentration. ***(Adapted from L. G. Britton, "Using Material Data in Static Hazard Assessment.")***

9.3 Generation and Dissipation of Static Electric Charge in Liquids.

9.3.1* Charge Generation. Charge separation occurs where liquids flow through pipes, hose, and filters; where splashing occurs during transfer operations; or where liquids are stirred or agitated. The greater the area of the interface between the liquid and the surfaces and the higher the flow velocity, the greater is the rate of charging. The charges become mixed with the liquid and are carried to receiving vessels, where they can accumulate. The charge is often characterized by its bulk charge density and its flow as a streaming current to the vessel. *(See Figure 9.3.1.)*

9.3.2* Charge Relaxation. Static electric charge on a liquid in a grounded conductive container will dissipate at a rate that depends on the conductivity of the liquid.

9.3.2.1 For liquids with conductivity of 1 picosiemens per meter (1 pS/m) or greater, charge relaxation proceeds by exponential, or ohmic, decay, as described for semiconductive materials in 5.4.5. For liquids with conductivity less than 1 pS/m, relaxation occurs more rapidly than would be predicted by the exponential decay model. *(See 5.4.8.)*

9.3.2.2 According to the Bustin relationship *(see Annex E)*, where low viscosity liquids (less than 30×10^{-6} m^2/sec) are charged, relaxation proceeds by hyperbolic decay. However, for those same liquids, the exponential decay constant gives a conservative estimate for the relaxation time.

Copyright 2014 National Fire Protection Association (NFPA). Licensed, by agreement, for individual use and download on October 4, 2014 to LEADER and READER for designated user PATTARAPORN SRITRAKOOL. No other reproduction or transmission in any form permitted without written permission of NFPA. For inquires or to report unauthorized use, contact licensing@nfpa.org.

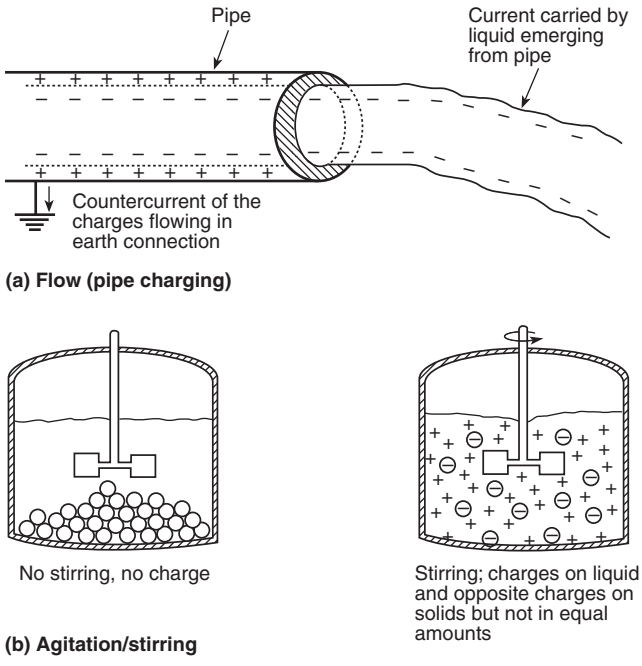

FIGURE 9.3.1 Examples of Charge Generation in Liquids. ***(Source: H. L. Walmsley, "Avoidance of Electrostatic Hazards in the Petroleum Industry," p. 33.)***

9.3.3 Factors That Affect Liquid Charging.

9.3.3.1* In grounded systems, the conductivity of the liquid phase has the most effect on the accumulation of charge in the liquid or on materials suspended in it. A liquid is considered nonconductive (charge accumulating) if its conductivity is below 50 pS/m, assuming a dielectric constant of 2. Table B.2 lists values of conductivity for typical liquids. What is important is that the charge decays from the liquid fast enough to avoid ignition hazards. The acceptable conductivity in any particular application can be larger or smaller, depending on flow rate and processing conditions.

9.3.3.2 Conductive liquids, defined as having conductivities greater than 10^4 pS/m, do not pose a hazard due to static electric charge accumulation in typical hydrocarbon and chemical processing and handling operations, provided that equipment is conductive or static dissipative and is grounded. In this recommended practice, liquids having conductivities of 50 pS/m to 10^4 pS/m are considered semiconductive.

9.3.3.3 The charging characteristics of many industrial liquids, particularly nonpolar hydrocarbons, are the result of trace contaminants in the liquid, sometimes in concentrations of less than 1 ppm. Thus, industrial liquids can become more or less conductive by orders of magnitude, depending on the concentration of contaminants that results from process, storage, and handling practices.

9.3.3.4 Conductive liquids that at first could appear to be safe can present a significant hazard if isolated from ground by an insulating container or if suspended in air. Where isolated, essentially all charge on the conductive liquid can be released as an incendive spark. Where suspended as a mist, significant static electric fields can lead to incendive brush discharge.

9.3.3.5 In the petroleum industry, for tank-loading and distribution operations involving petroleum middle distillates, liquids in the semiconductive category are handled as conductive liquids. The use of such procedures is possible because regulations prohibit the use of nonconductive plastic hose and tanks, and multiphase mixtures and end-of-line polishing filters are not involved.

9.3.3.6 In general chemical operations, semiconductive liquids represent a distinct category in which the tendency to accumulate charge varies greatly with the operation and with liquid conductivity. These operations can involve multiphase mixtures, nonconductive tank linings, and microfilters, all of which promote charge accumulation in equipment.

Chapter 10 Fluid Flow in Piping, Hose, Tubing, and Filters

10.1* Metal Piping Systems.

10.1.1 All parts of continuous all-metal piping systems should have a resistance to ground that does not exceed 10 ohms. A significantly higher resistance could indicate poor electrical contact, although this will depend on the overall system. For flanged couplings, neither paint on the flange faces nor thin plastic coatings used on nuts and bolts will normally prevent bonding across the coupling after proper torque has been applied. However, care should be taken to avoid accumulation of excessively thick coatings of paint over successive repaintings. Jumper cables and star washers are not usually needed at flanges. Star washers could even interfere with proper torquing. Electrical continuity of the ground path should be confirmed after assembly and periodically thereafter.

10.1.2 Bonding wires might be needed around flexible, swivel, or sliding joints. Tests and experience have shown that resistance in these joints is normally below 10 ohms, which is low enough to prevent accumulation of static charges. However, the manufacturer's specifications should be checked or the joints should be inspected, because a few are fabricated with insulating surfaces. Where painted, slip flanges (lap joints) using nonconductive gaskets can cause loss of continuity in the grounding path. This loss of continuity can be remedied by using a conductive gasket, such as a flexible, graphite-filled, spiral-wound gasket, or by installing a jumper wire across the joint.

10.1.3 Bonding and grounding should not compromise sections of pipe that are supposed to be isolated. For example, insulating flanges could have been installed to avoid arcs from stray current or from cathodic protection systems, which provide a separate ground path.

10.1.4 Figure 10.1.4(a) and Figure 10.1.4(b) provide guidance in estimating the charge on a nonconductive liquid flowing through a smooth pipe.

10.2* Nonconductive Pipe and Lined Pipe. Nonconductive surfaces affect the rates of charge generation and charge dissipation during flow through a pipe. The rate of charge generation is similar in conductive and nonconductive pipes, while the rate of charge loss can be significantly slower in nonconductive pipes. For charged, nonconductive liquids, insulation by the pipe wall can result in charge accumulation of the opposite polarity on the outer surface of the insulating liner or pipe. Charge accumulation can eventually lead to electrical

Copyright 2014 National Fire Protection Association (NFPA). Licensed, by agreement, for individual use and download on October 4, 2014 to LEADER and READER for designated user PATTARAPORN SRITRAKOOL. No other reproduction or transmission in any form permitted without written permission of NFPA. For inquires or to report unauthorized use, contact licensing@nfpa.org.

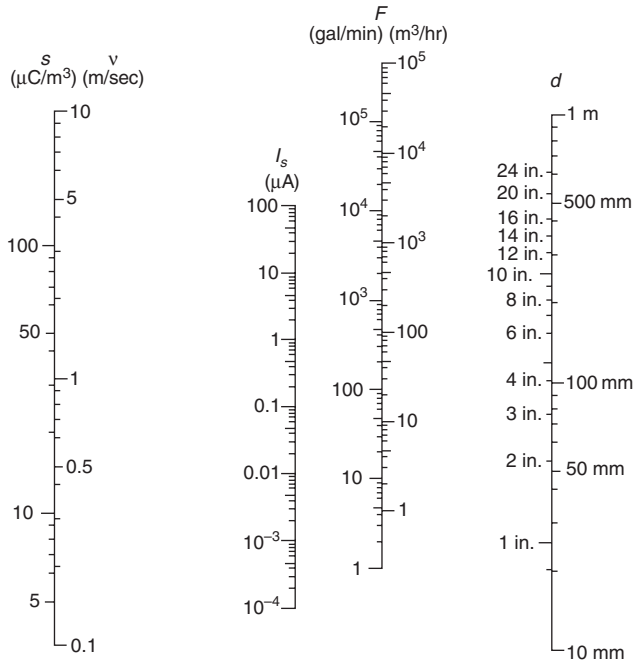

Notes:
(1) One straight line through the scales simultaneously solves the following equations:
$I_S = 2.5 \times 10^{-5}\, v^2 d^2$ $s = 3.18 \times 10^{-5}\, v$ $F = (\pi/4)\, v d^2$
(2) To convert from m/sec to ft/sec, multiply by 0.8; to convert from bbl/hr to m³/hr, multiply by 0.159.

FIGURE 10.1.4(a) Nomograph for Estimating Charge on Nonconductive Liquid Flowing Through a Smooth Pipe. ***(Source: T. H. Pratt, Electrostatic Ignitions of Fires and Explosions, p. 112.)***

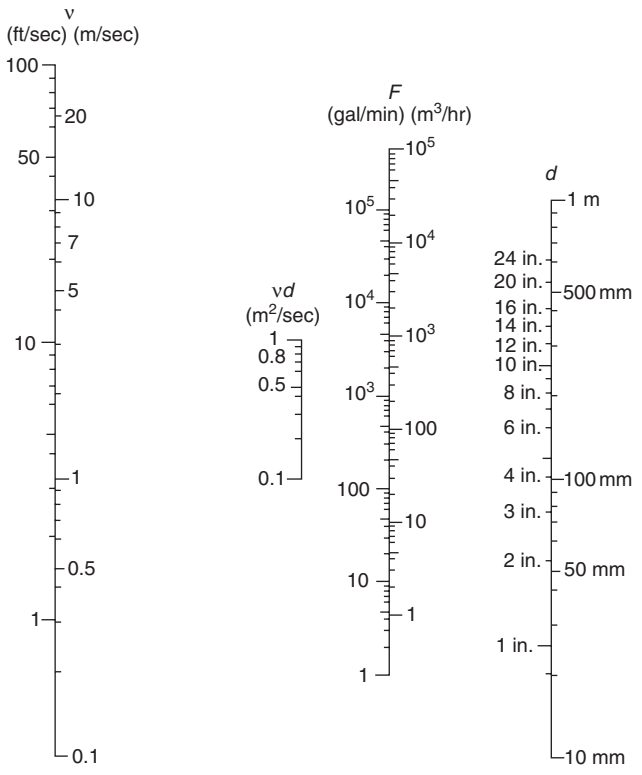

Notes:
(1) One straight line through the scales solves the flow relation:
$F = (\pi/4)\, v d^2$
(2) To convert from bbl/hr to m³/hr, multiply by 0.159.

FIGURE 10.1.4(b) Nomograph for Estimating Fluid Flow Parameters. ***(Source: T. H. Pratt, Electrostatic Ignitions of Fires and Explosions, p. 114.)***

breakdown and pinhole punctures of either the liner or, in the case of nonconductive pipe, the entire wall thickness.

10.3* Flexible Hose and Tubing. Flexible hose and flexible tubing are available in metal, lined metal, nonconductive plastic, reinforced rubber and plastic, and composite-ply types.

10.3.1 Where nonconductive hose or tubing must be used because of process conditions, the hazards of static electric charge generation should be thoroughly investigated.

10.3.2 As a minimum, all conductive couplings (e.g., end fittings) and components should be bonded and grounded.

10.3.3 If hose are used immediately downstream of filters in nonconductive liquid service, they should be of metal or other conductive material. Semiconductive liners might be necessary to prevent charge accumulation and pinhole damage to the hose.

10.3.4 Conductive hose should be electrically continuous, and the continuity should be periodically checked.

10.3.4.1 Hose with more than one internal spiral should not be used because it is not possible to determine if one of the spirals has lost its continuity.

10.4 Fill Pipes. Fill pipes should be conductive and should be bonded to the filling system.

10.4.1 Fill pipes should extend to the bottom of the vessel and can be equipped with either a 45-degree cut tip or a tee to divert flow horizontally near the bottom of the vessel being filled.

10.4.2 The design should prevent upward spraying during the initial stage of filling. A "slow start" might be necessary, so that the inlet velocity is held to less than 1 m/sec until the outlet of the dip pipe is covered by at least two pipe diameters of liquid.

10.5 Filtration.

10.5.1 Microfilters.

10.5.1.1 Microfilters typically have pore sizes less than 150 μm. These filters generate very large streaming currents with nonconductive liquids, due to their large contact area. (Conductive liquids typically dissipate their charge to ground through the body of the liquid.) Streaming currents frequently are greater than those for the pipe flow entering the microfilter by two orders of magnitude, and the charge density added to the liquid can exceed 2000 μC/m³.

10.5.1.2 To prevent the charges described in 10.5.1.1 from entering the receiving vessel, the filter should be placed far enough upstream so that the charge can decay to the magnitude it would be in the pipe flow. Common industry practice is to provide 30 sec of residence time in the pipe or conductive hose downstream of the microfilter, especially if the conductivity of the liquid is not known. For nonconductive liquids that have both very

Copyright 2014 National Fire Protection Association (NFPA). Licensed, by agreement, for individual use and download on October 4, 2014 to LEADER and READER for designated user PATTARAPORN SRITRAKOOL. No other reproduction or transmission in any form permitted without written permission of NFPA. For inquires or to report unauthorized use, contact licensing@nfpa.org.

low conductivity (i.e., less than 2 pS/m) and high viscosity (i.e., greater than 30 centistokes) at the lowest intended operating temperature, longer residence times might be appropriate. In those cases, a residence time of up to three times the relaxation time constant of the liquid should be considered.

10.5.2 Strainers. Mesh strainers finer than 150 µm should be treated as microfilters. Mesh strainers coarser than 150 µm can also generate significant static electric charge where fouled with accumulated debris. If such coarse strainers are used in services where debris can be expected to accumulate, then those strainers should also be treated as microfilters.

10.5.3 Polishing Filters. A polishing filter is sometimes placed at the end of a delivery line to remove debris. This filter might be a bag installed on the end of a hose and directly exposed to the vapor in the tank. Filters used in flammable liquid service should be enclosed in grounded metal housings.

10.6 Suspended Material. Immiscible and marginally soluble liquids and slow-dissolving solids can disperse as droplets or as an emulsion. Where a nonconductive liquid contains a dispersed phase, such as water in oil, the continuous phase determines the charge relaxation behavior. Charge generation typically is greater for such suspensions than that for a single phase.

10.7 Miscellaneous Line Restrictions. Piping system components, such as orifice plates, valves, elbows, and tees, increase turbulence and can increase the rate of charge generation. Brief contact with a plastic component, in particular, can cause significant charge generation. Suspended material such as water *(see 10.6)* also has been found to increase this effect.

Chapter 11 Static Electricity Hazards of Liquids in Containers and Intermediate Bulk Containers

11.1 Portable Tanks, Intermediate Bulk Containers (IBCs), and Non-Bulk Containers. The practices specified in this section should be followed to reduce static electricity hazards during filling and emptying of portable tanks, IBCs, and containers.

11.1.1 Metal Portable Tanks and Metal IBCs.

11.1.1.1 Metal portable tanks and IBCs should be bottom-filled, if possible.

11.1.1.2 Where used for nonconductive flammable liquids, filters should be placed at least 30 sec upstream, as recommended in 10.5.1.2.

11.1.1.3 The portable tank or IBC should be bonded to the fill system prior to opening and should be closed before being disconnected from the bond.

11.1.1.4 Filling rates should be similar to those normally used for drum filling, about 225 L/min or less, unless the container is inerted.

11.1.1.5 If the fill pipe does not extend close to the bottom and the vessel is not inerted, a slow start velocity of 1 m/sec or less should be used until the fill pipe is submerged to about 150 mm.

11.1.1.6 Portable tanks and IBCs with nonconductive linings present hazards somewhat more severe than with drums, due to the larger capacity and the greater energy that can be stored for equal charge densities.

11.1.2 Nonconductive Portable Tanks and Nonconductive IBCs.

11.1.2.1 Filling nonconductive portable tanks or IBCs with combustible liquids at temperatures below their flash points presents no significant static electric ignition hazard. Filling such a vessel with a combustible liquid that is within 5°C (9°F) of its flash point for homogeneous liquids and 11°C (20°F) of its flash point for liquids of uncertain composition should be done using the same procedures and precautions used for Class I flammable liquids.

11.1.2.2 Refilling a vessel that could contain flammable vapors from a previous product should not be permitted. Additionally, the routine handling of nonconductive vessels filled with any type of liquid can generate a charge on the outside surface of the vessel.

11.1.2.3 Nonconductive portable tanks and IBCs should not be used where ignitible ambient vapors are present.

11.1.2.4 Portable tanks and IBCs constructed of nonconductive materials are prohibited for use with Class I liquids by NFPA 30, *Flammable and Combustible Liquids Code*, except under very strict conditions. Where such containers are used for Class II and Class III liquids, the precautions for filling depend on the size of the container, the container design, and the conductivity of the liquid.

11.1.3 Metal Non-Bulk Containers.

11.1.3.1 Where being filled, metal containers and associated fill equipment should be bonded together and grounded.

11.1.3.2 Bonding should be done with a clamp that has hardened steel points that will penetrate paint, corrosion products, and accumulated material using either screw force or a strong spring. *(See Annex G for recommendations.)*

11.1.3.3 The clamp should be applied prior to removal of the container bungs and at a point on the top chime that is located away from the bung openings.

11.1.3.4 The grounded fill pipe should be cut at approximately 45 degrees and be left relatively sharp to inhibit brush discharges from the liquid surface.

11.1.3.5 The tip of the fill pipe should extend to within 25 mm of the bottom of the drum and remain beneath the liquid surface until the drum is filled. Viscous liquids that flow without splashing can be deflected by a short fill nozzle to flow down the inside wall of the drum. Inerting of the drum is seldom necessary.

11.1.3.6 Where liquid is dispensed from a metal container, the container should be grounded.

11.1.3.7 Self-closing, metal dispensing valves should be used.

11.1.3.8 Where liquid is dispensed from an upright drum, the dip pipe, conductive hose, and pump should be bonded to the drum and grounded. *(For funnels and receiving containers, see 11.1.7.)*

11.1.4 Plastic-Lined Metal Non-Bulk Containers.

11.1.4.1 The effects of static electricity from thin, internal coatings, such as phenolic or epoxy paints, can be ignored, provided that the thickness of the coating does not exceed 50 µm (2 mils). A container with a thin lining can be treated as a metal container. The hazards of special coatings such as fluoropolymers have not been fully evaluated, and it is advised that, at a minimum, liquid is

Copyright 2014 National Fire Protection Association (NFPA). Licensed, by agreement, for individual use and download on October 4, 2014 to LEADER and READER for designated user PATTARAPORN SRITRAKOOL. No other reproduction or transmission in any form permitted without written permission of NFPA. For inquires or to report unauthorized use, contact licensing@nfpa.org.

not directly sprayed at such coatings above the liquid level, such as by means of a hand-held wand.

11.1.4.2 Where the drum has a lining of nonconductive plastic thicker than 50 µm (2 mils), it should be treated as a nonconductive container, unless the lining is either conductive (volume resistivity < 10^5 ohm-m) or static dissipative (volume resistivity < 10^9 ohm-m). Conductive and static dissipative linings are conductive enough to safely dissipate charge provided the lining is not isolated from ground by a nonconductive coating beneath it *(see 11.1.5)*. Owing to the common use of *surface resistivity* to describe linings, it is recommended that *conductive* types be used where the volume resistivity is in doubt. To avoid spark hazards due to batch defects of conductive linings, a simple performance test can be used. For example, megger or tera-ohmmeter measurements can be made between the top and bottom of several lining samples to confirm that the resistance is within the range provided by the lining supplier.

11.1.5* Removable Conductive and Static Dissipative Linings. Drums and pails usually have internal nonconductive phenolic or epoxy internal painted coatings less than 50 µm (2 mils) thick. These coatings can isolate the removable lining plus any liquid contents from ground. No special measures are needed for grounded, lined pails during ordinary liquid transfer and stirring operations, although open pails should be grounded using a clamp at the upper rim that also grounds the removable lining. The following measures should be considered for drums.

(1) Open-head drums should be grounded using a clamp connected across the upper chime, so that both the drum and removable lining are bonded and grounded.
(2) Closed-head drums can in many cases be filled via a grounded dip pipe that is fully inserted before the drum is filled.

11.1.5.1 Where the measures are impractical, a helpful measure is to select drums that have coating thicknesses in the range 12–25 µm (0.5 to 1 mil), so that the breakdown voltage between the lining and the drum is minimized. A pragmatic solution is simply to remove part of the drum coating at the chime so that the lining contacts bare metal.

11.1.6 Plastic Non-Bulk Containers. The use of plastic containers for Class I liquids is limited by Table 9.4.3 and Table 9.4.3.1 of NFPA 30, *Flammable and Combustible Liquids Code*. Where such containers are used for Class II and Class III liquids, the precautions for filling depend on the size of the container, the container design, and the conductivity of the liquid.

11.1.6.1 Because plastic containers cannot be grounded, they should not be used for Class I liquids or handled in flammable atmospheres without expert review of the hazards.

11.1.6.2 For Class II liquids, hazards of static electricity should be addressed as follows:

(1) Where the liquid is within 5°C (9°F) of its flash point, for homogeneous liquids, and 11°C (20°F) of its flash point, for mixed liquids of uncertain composition during filling or emptying
(2) Where the container might be stored or handled in an ignitible ambient atmosphere

11.1.6.3 The options that can be used to address the situation specified in 11.1.6.2(1) include bottom filling and cooling of the liquid prior to unloading, especially if the container has been in direct sunlight or in a hot storage area. Continuous inerting during unloading can also be considered.

11.1.6.4 For the situation specified in 11.1.6.2(2), plastic containers should be stored away from containers of flammable liquids so that the hazard of static electric discharge from the external surface of the plastic container is avoided.

11.1.7 Hand-Held Containers Up to 20 L Capacity. The fire risk from static electricity increases with the volume of the container and the volatility of the liquid handled. Thus, the smallest-volume container capable of effectively fulfilling a particular need should normally be selected and should not exceed 20 L.

11.1.7.1 Listed safety cans should be used, especially those types equipped with a flexible metal dispensing nozzle so they can be used without a funnel.

11.1.7.2 Because nonconductive containers cannot be grounded, they should be limited to 2 L for Class IA liquids and 5 L for Class IB and Class IC liquids. An exception is gasoline, for which approved 20 L plastic cans have been widely used for many years with no reported increase in ignition incidents due to static electricity compared with metal cans. That record is due in part to the rapid establishment of rich (above the UFL) gasoline vapor inside the can.

11.1.7.3 The plastic containers specified in 11.1.7.2 should not be used for other flammable liquids without review of the hazards. Unlike gasoline, conductive liquids such as alcohols can become inductively charged by a charged plastic container and give rise to sparks. In addition, the container can contain an ignitible atmosphere.

11.1.8 Nonconductive Containers. Subject to the volume limitations described in 11.1.7, it is common to handle flammable liquids in small glass or plastic containers of 0.5 L capacity or less.

11.1.8.1 Where the containers specified in 11.1.8 are involved in frequent transfer operations, such as a small-scale solvent blending operation, a grounded metal funnel with a spout that extends to the bottom of the container should be used for filling the container. This practice ensures that any charge induced on the liquid by the container, as could happen if the plastic container has been charged by rubbing, is dissipated through the grounded funnel.

11.1.8.2 Plastic or glass funnels should be used only where essential for compatibility reasons.

11.1.9 Containers for Sampling.

11.1.9.1 Ignition risk is greatly increased where an ignitible atmosphere is present outside the container; for example, where sampling is directly from a tank or a sample is transferred near a manway, because such a situation can precipitate a large fire or explosion. A grounded metal sample "thief" or glass bottle in a grounded metal sample cage can be used in such cases.

11.1.9.2 Because they are more easily charged than glass, nonconductive plastic containers should be avoided except where used in well-ventilated areas. If outdoor sampling is carried out at sample spigots that are located away from tank openings and in freely ventilated areas and if sampled quantities are 1 L or less, the fire risk is, in most cases, insufficient to necessitate any special procedures other than bonding of metal components.

11.2* Cleaning of Containers.

11.2.1 Containers should be bonded and grounded prior to being opened for cleaning operations such as steaming.

11.2.2 Cleaning equipment should be bonded or grounded.

Copyright 2014 National Fire Protection Association (NFPA). Licensed, by agreement, for individual use and download on October 4, 2014 to LEADER and READER for designated user PATTARAPORN SRITRAKOOL. No other reproduction or transmission in any form permitted without written permission of NFPA. For inquires or to report unauthorized use, contact licensing@nfpa.org.

Chapter 12 Static Electricity Hazards of Liquids in Bulk Storage Tanks and in Tank Vehicles

12.1 Storage Tanks.

12.1.1* General. Liquid flowing into a tank can carry a static electric charge that will accumulate in the tank. This charge can be detected as a potential above the surface of the liquid in the tank. The maximum surface potential attained depends on the charge density of the incoming liquid and on the dimensions of the tank. The precautions in this section regarding fill rates and flow velocities should be taken where an ignitible atmosphere can be present in the tank. In general, a properly inerted tank will not need to follow the flow velocity guidelines in Section 12.1.

12.1.2 Classification. For the purpose of Section 12.1, storage tanks are classified according to their diameter and capacity, as shown in Table 12.1.2.

12.1.3 For the purpose of Section 12.1, conductive tanks are considered to be those vessels having less than 1 megohm resistance to ground.

12.1.4 Large Conductive Tanks.

12.1.4.1 For all liquids (from nonconductive to conductive), the following precautions should be taken:

(1) The tank and all associated equipment, such as piping, pumps, and filters, should be grounded.
(2) Personnel entering or working near tank openings should be grounded.
(3) Splash filling should be avoided.
(4) For low conductivity liquids, the guidelines given in Table 12.1.4.4 should be followed.

12.1.4.2 Specific Recommendations for Large Conductive Fixed-Roof Tanks. For nonconductive liquids, the following additional precautions should be taken:

(1) High static electric charge–generating elements, such as pumps and filters, should be located a suitable residence time upstream of the tank inlet. *(See 10.5.1.2.)*
(2) For uncontaminated single-phase liquids, the inlet flow velocity should be restricted to 1 m/s until the fill pipe has been submerged to a depth of twice the inlet pipe diameter. Fill rate can then be increased up to 7 m/s.
(3) For multiphase or contaminated liquids and where it cannot be ensured that water bottoms will not be disturbed, the inlet flow velocity should be restricted to 1 m/s during the entire fill cycle.
(4) Use of a centrally located inlet pipe that extends to within 150 mm of the bottom of the tank is recommended. A horizontal tee is recommended at the discharge for bottom fill connections.
(5) Accumulation of water and sediment in the tank should be minimized.
(6) For multistage loading, liquids should be transferred to the tank in increasing order of density.
(7) In all cases, the maximum flow velocity should not exceed 7 m/s.

12.1.4.3* Specific Recommendations for Large Conductive Floating-Roof Tanks and Fixed-Roof Tanks with Internal Floating Covers. For all liquids, an initial flow velocity no greater than 1 m/s should be maintained at all times while the roof or cover is landed, regardless of depth of liquid above the inlet connection. Flow velocity can be increased when the roof or cover becomes buoyant. At that time, the flammable atmosphere will be shielded from the potentials developing during filling by the floating roof or cover, provided the roof or cover is made from conductive material and is properly grounded.

12.1.4.4 Summary of Flow Velocities. Table 12.1.4.4 summarizes the flow velocity restrictions for large tanks.

12.1.5 Medium-Sized Fixed-Roof Conductive Tanks.

12.1.5.1 The following precautions should be taken for all types of liquid:

(1) The recommendations in 12.1.4.1 should be followed.
(2) Flow velocities within the limits given in 12.1.5.3 should be maintained.
(3) Lines should be cleared with air or other gas unless it is certain that the operation will not overpressure the equipment.

12.1.5.2 The following additional precautions should be taken for low conductivity liquids:

(1) Sufficient residence time should be provided for charge relaxation between high charging elements (e.g., filters) and the tank inlet, as recommended in Table 12.1.4.4.

Table 12.1.2 Classification of Storage Tanks

Tank Size	All Vertical-Axis Cylindrical Tanks and All Rectangular Tanks Whose Length-to-Width Ratio ≤ 1.5	All Horizontal-Axis Cylindrical Tanks and All Rectangular Tanks Whose Length-to-Width Ratio > 1.5
Large tanks	$D > 10$ m	Capacity > 500 m^3
Medium tanks	1.3 m < $D \leq 10$ m	2 m^3 < capacity ≤ 500 m^3
Small tanks	$D \leq 1.3$ m	Capacity ≤ 2 m^3

D = diameter of cylindrical tanks [for rectangular tanks $D = 2(LW/N)^{1/2}$] (m)
L = maximum linear dimension of noncylindrical rectangular cross-section tank (m)
W = minimum linear dimension of noncylindrical rectangular cross-section tank (m)
d = inlet fill line diameter (m)
v = inlet liquid flow velocity (m/s)
N = 1 for tank lengths < 2 m
$N = (L/2)^{1/2}$ for tank lengths ≥ 2 m and ≤ 4.6 m
N = 1.5 for tank lengths > 4.6 m

Copyright 2014 National Fire Protection Association (NFPA). Licensed, by agreement, for individual use and download on October 4, 2014 to LEADER and READER for designated user PATTARAPORN SRITRAKOOL. No other reproduction or transmission in any form permitted without written permission of NFPA. For inquires or to report unauthorized use, contact licensing@nfpa.org.

Table 12.1.4.4 Summary of Precautions for Filling Large Conductive Tanks with Low-Conductivity Liquids

Precautions	Applicability to Tank	
	With Floating Roof or Internal Cover	With Fixed Roof, No Floating Cover
Keep flow velocities below 1 m/s.	Essential until the roof or cover is afloat.	Essential during the initial filling period and when loading a contaminated or two-phase liquid or a liquid with a substantially lower density than that already in the tank.
Keep flow velocities below 7 m/s.	Not essential when the roof or cover is afloat. NOTE: A flow rate limit will often be needed to avoid damaging the roof by too rapid movement.	Recommended in all cases in which the 1 m/s limit does not apply.
Ensure adequate residence time between strong charge generators (e.g., microfilters) and the tank.	Essential until the roof or cover is afloat. NOTE: The residence time can be calculated using a velocity of 1 m/s in this instance.	Essential.
Avoid disturbing water bottoms with incoming product or entrained air or by blowing out lines with gas.	Essential until the roof or cover is afloat.	Essential.
Avoid charging low density liquids into tanks containing substantially higher density liquids.	Unnecessary.	Recommended as far as practicable. If unavoidable, keep the flow velocity below 1 m/s (see Row 1).

(2) The level of water in the bottom of the tank should be kept at least two pipe diameters below the inlet.
(3) The inlet should be designed to minimize jetting of highly charged product to the surface and to minimize the disturbance of water bottoms or sediment. For example, a dip pipe should be used for overhead filling and a horizontal tee should be used for bottom side entry filling.
(4) Splash filling should be avoided by bottom filling or by using an inlet pipe extending close to the tank bottom. A fill pipe directed toward the inner wall of the tank can be used where the process requires top filling. In such cases, flow velocity should not exceed the lesser of 2 m/s or 50 percent of the flow velocity determined from the allowable velocity limit (see 12.1.5.3), and the pipe discharge should be at least 200 mm above the maximum fill level.

12.1.5.3 Additional Flow Velocity and Flow Rate Limitations for Medium-Sized Fixed-Roof Tanks.

12.1.5.3.1 To prevent dangerous accumulation of static electric charge, flow velocity must be limited through a relaxation region upstream of the tank. This region consists of a run of piping through which the liquid has a residence time equal to the lesser of 30 seconds or 3 relaxation times. Relaxation time should be based on that liquid having the lowest possible conductivity that might be handled. The 30 seconds criterion should be adopted where the lowest value of conductivity is not known.

12.1.5.3.2 To ensure that the velocity limits are met throughout the relaxation region, it is necessary only to ensure that they are met through the most critical section, which is that section having the smallest pipe diameter in an unbranched system. If the section having the smallest diameter is less than 5 m long and is only one nominal pipe size less than the section having the next smallest diameter, then the latter can be taken as the critical one.

12.1.5.3.3 For branched systems (e.g., a large feeder line that divides into smaller lines, such that the upstream pipe segments feed several tanks while downstream sections each feed just one tank), the critical section is the one with the highest value of F_s/d_s^3, where F_s is the highest possible flow rate through the segment and d_s is the diameter of the pipe in the segment.

12.1.6 Limitations for Medium-Sized Fixed-Roof Tanks.

12.1.6.1 Allowable flow velocities depend on the conductivity of the liquid being transferred and the size and geometry of

Copyright 2014 National Fire Protection Association (NFPA). Licensed, by agreement, for individual use and download on October 4, 2014 to LEADER and READER for designated user PATTARAPORN SRITRAKOOL. No other reproduction or transmission in any form permitted without written permission of NFPA. For inquires or to report unauthorized use, contact licensing@nfpa.org.

the tank into which the liquids are transferred. For medium- and low-conductivity liquids, the initial flow velocity should not exceed 1 m/s until the fill pipe outlet is submerged to a depth of two pipe diameters.

12.1.6.2 After the low initial filling rate period or where such a period is not needed, a maximum flow can be established in accordance with the following:

(1) For conductive liquids and for single-phase medium-conductivity liquids, a maximum flow velocity of 7 m/s is recommended.
(2) For liquids with contaminants and for two-phase medium- or low-conductivity liquids, a maximum flow velocity of 1 m/s is recommended.

12.1.6.3 For uncontaminated, single-phase low-conductivity liquids, the following applies:

(1) For vertical-axis cylindrical tanks and for rectangular tanks of near-square cross section, the maximum flow velocity should be the lesser of 7 m/s or $0.7(D/d)^{1/2}$ m/s, where D is the diameter of a cylindrical tank, in meters, and d is the diameter of the inlet fill line, also in meters. For rectangular tanks, $D = 2(LW/N)^{1/2}$.
(2) For horizontal-axis cylindrical tanks and for rectangular tanks having $L/W \leq 1.5$, the maximum velocity should be one of the following, where N is the factor described in Table 12.1.2 and d is the diameter of the inlet fill line, in meters:
   (a) $0.5 \times N/d$ for top loading and for bottom loading with a central conductor
   (b) $0.38 \times N/d$ for bottom loading without a central conductor

12.1.6.3.1 Where multiple tanks are filled through a branched line, the critical section might occur at a location that feeds more than one tank. In that case, the maximum velocity in the critical section can be increased by a factor $N_s^{1/2}$ from the value given in 12.1.6.3(1), where N_s is the ratio of the maximum flow rate through the critical segment to the flow rate into the tank.

12.1.7 Grounding.

12.1.7.1 Storage tanks for nonconductive liquids should be grounded. Storage tanks on grade-level foundations are considered inherently grounded, regardless of the type of foundation (e.g., concrete, sand, or asphalt).

12.1.7.2 For tanks on elevated foundations or supports, the resistance to ground can be as high as 10^6 ohms and still be considered adequately grounded for purposes of dissipation of static electric charges, but the resistance should be verified. The addition of grounding rods and similar grounding systems will not reduce the hazard associated with static electric charges in the liquid.

12.1.8 Spark Promoters.

12.1.8.1 A tank gauging rod, high-level sensor, or other conductive device that projects downward into the vapor space of a tank can provide a location for static electric discharge between the device and the rising liquid; therefore, these devices should meet the following criteria:

(1) They should be bonded securely and directly downward to the bottom of the tank by a conductive cable or rod to eliminate a spark gap or should be installed in a gauging well that is bonded to the tank.
(2) They should be inspected periodically to ensure that the bonding system has not become detached.

12.1.8.2 If tank fixtures are nonconductive, the potential for sparking does not exist, and no specific measures are needed. Devices that are mounted to the sidewall of the tank (e.g., level switches or temperature probes) and project a short distance into the tank might not pose a static electric discharge hazard. These situations should be evaluated on an individual basis.

12.1.9 Tank Mixers. In-tank jet mixing or high-velocity agitator mixing can stir up water and debris and cause splashing at the surface that can generate static electric charges. If an ignitible mixture exists at the surface, ignition is possible. For these reasons, surface splashing should be minimized. Gas blanketing or inerting can be employed to eliminate the ignition hazard.

12.1.10 Gas Agitation.

12.1.10.1 Air, steam, or other gases should not be used for agitation because they can produce high levels of charge in liquids, mists, or foams. In addition, air agitation can create an ignitible atmosphere in the vapor space of the tank. If gas agitation is unavoidable, the vapor space should be purged prior to mixing, and the process should be started slowly to ensure that static electric charge does not accumulate faster than it can dissipate.

12.1.10.2 It should be noted that special precautions need to be taken to prevent agitation with air because it can dilute any initial inerting. Similarly, while agitation with an inert gas can eventually result in an inert vapor space, the buildup of a static electric charge due to the agitation process can result in a spark and ignition before inerting of the tank vapor space is achieved. A waiting time should be observed prior to any gauging or sampling activities.

12.1.11 Coated and Lined Tanks. The presence of internal coatings or linings in grounded metal tanks can generally be neglected, provided that one of the following criteria applies:

(1) The coating or lining has a volume resistivity equal to or lower than 10^9 ohm-m.
(2) Thickness of a painted coating does not exceed 50 μm (2 mils).
(3) The liquid is conductive and is always in contact with ground, for example, a grounded dip tube or grounded metal valve.

12.1.11.1 Metal tanks with nonconductive coatings or linings that do not meet the criteria of 12.1.11(1) or 12.1.11(2) should be treated as nonconductive tanks. Regardless of the coating or lining thickness or resistivity, the tank should be bonded to the filling system.

12.1.12 Tanks Constructed of Nonconductive Materials. Tanks constructed of nonconductive materials are not permitted for storage of Class I, Class II, and Class IIIA liquids, except under special circumstances, as outlined in Section 21.4 of NFPA 30, *Flammable and Combustible Liquids Code. (See Section 13.7 for design and use recommendations.)*

12.2 Loading of Tank Vehicles. Recommended loading precautions for tank vehicles vary with the characteristics of the liquid being handled and the design of the loading facility. A summary of recommended precautions that should be used where a flammable mixture exists in the tank vehicle compartment, based on API RP 2003, *Protection Against Ignitions Arising Out of Static, Lightning, and Stray Currents,* is provided in Table 12.2. These precautions are intended for tank vehicles with conductive (metal) compartments. *(For compartments with nonconductive linings, see Section 13.5. For compartments of nonconductive material, see Section 13.7.)*

Copyright 2014 National Fire Protection Association (NFPA). Licensed, by agreement, for individual use and download on October 4, 2014 to LEADER and READER for designated user PATTARAPORN SRITRAKOOL. No other reproduction or transmission in any form permitted without written permission of NFPA. For inquires or to report unauthorized use, contact licensing@nfpa.org.

Table 12.2 Summary of Precautions for Loading Tank Vehicles

	Liquid Being Loaded			
	Nonconductive			
Recommended Loading Precaution[a]	Low Vapor Pressure	Intermediate Vapor Pressure	High Vapor Pressure[b]	Conductive[c,d]
Bonding and Grounding. Tank trucks should be bonded to the fill system, and all bonding and grounding should be in place prior to starting operations. Ground indicators, often interlocked with the filling system, frequently are used to ensure bonding is in place. Bonding components, such as clips, and the fill system continuity should be periodically examined and verified. For top loading, the fill pipe should form a continuous conductive path and should be in contact with the bottom of the tank.	Yes[e]	Yes	Yes	Optional
Initial Loading. Top-loading fill pipes and bottom-loading systems should be equipped with spray deflectors, and splash filling should be avoided. A slow start (i.e., velocity less than 1 m/sec) should be employed until the inlet into the compartment is covered by a depth equal to two fill-pipe diameters to prevent spraying and to minimize surface turbulence.	Yes	Yes	Yes	Yes
Maximum Loading Rate. The maximum loading rate should be limited so the velocity in the fill pipe or load connection does not exceed 7 m/sec or $(0.5/d)$ m/sec (where d = inlet inside diameter in meters), whichever is less.[f] Transition from slow start to normal pumping rate can be achieved automatically using a special loading regulator tip (which shifts the rate when submerged to a safe depth). Excessive flow rates should be avoided, either procedurally or by system design, which is the preferred method. The maximum loading rate for ultra low–sulfur diesel and gas oils (<50 ppm S) with conductivity less than 10 pS/m or unknown conductivity should not exceed $0.25/d$ m/s. The loading rate can be increased to $0.38/d$ m/s if S > 50 ppm or if the conductivity exceeds 10 pS/m. If S > 50 ppm and the conductivity exceeds 10 pS/m, the loading rate can be increased to $0.5/d$ m/s. If the conductivity exceeds 50 pS/m, the loading rate can be increased to $0.5/d$ m/s in both cases. For tank vehicles that are configured for high-speed loading, see Note i.	Yes[e]	Yes	Optional[c]	Optional
Charge Relaxation. A residence time of at least 30 sec should be provided between any microfilter or strainer and the tank truck inlet.[g] A waiting period of at least 1 minute should be allowed before the loaded tank compartment is gauged or sampled through the dome or hatch. [However, sampling and gauging via a sample well (gauge well) can be done at any time.]	Yes[e]	Yes	Yes	Optional
Spark Promoters. A tank gauging rod, high-level sensor, or other conductive device that projects downward into the vapor space of a tank can provide a location for static discharge between the device and the rising liquid and should be avoided. These devices should be bonded securely and directly downward to the bottom of the tank by a conductive cable or rod (to eliminate a spark gap) or should be installed in a gauging well that is bonded to the bottom.[h] Periodic inspection should be conducted to ensure that the bonding system does not become detached and that there are no ungrounded components or foreign objects.	Yes	Yes	Yes	Optional

[a]Loading precautions vary with the product being handled. In loading operations where a large variety of products are handled and where it is difficult to control loading procedures, such as at self-service loading racks, a single standard procedure that includes all the precautions should be followed.

[b]If high vapor pressure products are handled at low temperatures (near or slightly below their flash points), all the recommended loading precautions should be followed.

[c]Where additives are used to increase conductivity, caution should be exercised. *(See 12.2.6.)*

[d]Semiconductive liquids can accumulate charge where charging rates are extremely high or where they are effectively isolated from ground. They might need to be handled as nonconductive liquids. *(See 9.3.3.6.)*

[e]Recommended loading precautions need not be applied if only low vapor pressure combustible liquids at ambient temperatures are handled at the loading rack and there is no possibility of switch loading or cross contamination of products. All loading precautions should be followed where low vapor pressure products are handled at temperatures near (within 4°C to 9°C) or above their flash points. *(See 9.2.1 for applicable safety factors.)*

[f]Where the product being handled is a nonconductive, single-component liquid (such as toluene or heptane), the maximum flow velocity should be $(0.38/d)$ m/sec.

[g]Very low conductivity and high-viscosity products can require additional residence time of up to 100 sec. *(See 10.5.1.2.)*

[h]If these devices are nonconductive, the potential for sparking does not exist, and no specific measures need be taken. Devices that are mounted to the sidewall of the tank (e.g., level switches and temperature probes), that project a short distance into the tank, and that have no downward projection might not pose an electrostatic hazard. These situations should be evaluated on an individual basis.

[i]The maximum flow velocity for tank vehicles configured for high-speed loading can be increased as follows: for ultra low–sulfur diesel fuel and for gas oils with not more than 50 ppm sulfur and conductivity less than 10 pS/m or unknown conductivity can be increased to $(0.35/d)$ m/s; for diesel fuel and gas oils with more than 50 ppm sulfur or whose conductivity exceeds 10 pS/m, the loading rate can be increased to $(0.5/d)$ m/s.

Copyright 2014 National Fire Protection Association (NFPA). Licensed, by agreement, for individual use and download on October 4, 2014 to LEADER and READER for designated user PATTARAPORN SRITRAKOOL. No other reproduction or transmission in any form permitted without written permission of NFPA. For inquires or to report unauthorized use, contact licensing@nfpa.org.

12.2.1 Top Filling. Splash filling should be avoided by using a fill pipe that is designed according to the recommendations in 10.4.

12.2.2 Bottom Filling. The bottom-filling inlet should be designed with a deflector or a diverter to prevent upward spraying and generation of mist. Using a cap or a tee to direct incoming liquid sideways toward the compartment walls, rather than upward, will achieve this objective.

12.2.3 Switch Loading. The practice of loading a liquid having a high flash point and low conductivity into a tank vehicle that previously contained a low flash point liquid is referred to as *switch loading*. This practice can result in the ignition of residual flammable vapor as the tank vehicle is filled. The methods of hazard prevention are similar to those specified in Section 12.1. Flow velocities are found in Table 12.2.

12.2.4 Highway Transport. As noted in API RP 2003, *Protection Against Ignitions Arising Out of Static, Lightning, and Stray Currents,* tank vehicles normally do not create a static electricity hazard during transport, provided that they are compartmented or contain baffles. The compartments or baffles minimize sloshing of the liquid in the tank vehicle, which could result in significant charge generation. Clear bore (unbaffled) tank vehicles should not be used for liquids that can generate an ignitible mixture in the vapor space.

12.2.5 Unloading of Tank Vehicles. For bulk transfer of liquids from tank vehicles to storage tanks, see Section 12.1.

12.2.6 Antistatic Additives. Charge accumulation can be reduced by increasing the conductivity of the liquid by adding a conductivity-enhancing agent (antistatic additive).

12.2.6.1 Antistatic additives normally are added in parts-per-million concentrations and should be used in accordance with manufacturer instructions.

12.2.6.2 Where antistatic additives are used as a primary means of minimizing accumulation of static electric charge, the operator should verify the concentration of the additive at critical points in the system.

12.3* Vacuum Trucks.

12.3.1 For control of static electricity, hose should be conductive or semiconductive.

12.3.2 As an alternative to the recommendation of 12.3.1, all conductive components should be bonded, and the truck should be grounded.

12.3.3 In no case should plastic dip pipes or plastic intermediate collection pans or drums be used.

12.4 Railroad Tank Cars.

12.4.1 In general, the precautions for railroad tank cars are similar to those for tank vehicles specified in Section 12.2. The major exception is the larger volume typical of railroad tank cars (e.g., greater than 87 m^3) compared with that of tank vehicles (e.g., about 50 m^3). The greater volume allows greater maximum flow velocities to be used for filling, up to a maximum of $0.8/d$ m/sec, where d is the inside diameter of the inlet in meters.

12.4.2 Many tank cars are equipped with nonconductive bearings and nonconductive wear pads located between the car itself and the trucks (wheel assemblies). Consequently, resistance to ground through the rails might not be low enough to prevent accumulation of a static electric charge on the tank car body. Therefore, bonding of the tank car body to the fill system piping is necessary to protect against charge accumulation. In addition, because of the possibility of stray currents, loading lines should be bonded to the rails.

12.5 Marine Vessel and Barge Cargo Tanks. Marine vessel and barge cargo tanks are beyond the scope of this recommended practice. The recommendations given in the *International Safety Guide for Oil Tankers and Terminals* (ISGOTT) should be followed.

Chapter 13 Static Electricity Hazards in Process Vessels

13.1 General.

13.1.1 For the purpose of this chapter, the term "process vessel" or "vessel" can be considered synonymous with the words "process tank," "mixing tank," "tank," or "compartment."

13.1.2 Accumulation of static electricity in process vessels occurs by the same methods as described in Section 12.1 for storage tanks.

13.1.3 Where a conductive and a nonconductive liquid are to be blended, the conductive liquid should be added first so that the conductivity of the mixture is as high as possible throughout the mixing process.

13.1.4 Re-entry of recirculation loops into a process vessel should be designed to minimize splashing and surface disruption, for example, by use of subsurface jets that do not break the liquid's surface.

13.2* Procedures for Transfer to Tanks.

13.2.1 When two or more nonconductive liquids are introduced into a process vessel, the loading sequence should be such that the less dense liquid(s) will not percolate up through the more dense liquid(s). This will minimize charge generation.

13.2.2 Splash recirculation normally should be done only if the vessel is inerted or vapor enriched.

13.3 Agitation. Agitators should be covered with sufficient depth of liquid before being operated, to minimize splashing, or should be operated at reduced speed until sufficient depth has been achieved. In cases where hazardous charge accumulation cannot be avoided using the measures discussed in this chapter, the vessel can be inerted.

13.4 Process Vessels with Nonconductive Linings. The accumulation of static electric charge can result in pinhole damage to equipment such as enamel- or glass-lined vessels. Because static electric discharges often occur at the liquid interface as liquid drains from the wetted wall, a vapor ignition hazard could also exist. In some cases, it is possible to specify static dissipative coatings for the vessel or agitator. Conductive vessels and appurtenances should be bonded and grounded. In some cases, inerting might be necessary.

13.5 Adding Solids. The most frequent cause of static electric ignitions in process vessels is the addition of solids to flammable liquids in the vessels. Even where the vessel is inerted, large additions of solids will introduce air into the vessel while expelling flammable vapor from the vessel. The sudden addition of a large volume of solids can also result in static discharge from a floating pile of charged powder.

Copyright 2014 National Fire Protection Association (NFPA). Licensed, by agreement, for individual use and download on October 4, 2014 to LEADER and READER for designated user PATTARAPORN SRITRAKOOL. No other reproduction or transmission in any form permitted without written permission of NFPA. For inquires or to report unauthorized use, contact licensing@nfpa.org.

13.5.1 Manual addition of solids through an open port or manway should be done only in 25 kg batches.

13.5.2 Batch additions larger than 25 kg [e.g., from flexible intermediate bulk containers *(see Section 16.6)*] should be done through an intermediate hopper with a rotary valve or an equivalent arrangement. The hopper can be inerted separately to reduce air entrainment into the mixing vessel, while expulsion of vapor into the operating area can be avoided by venting the vessel to a safe location. The addition of solids from nonconductive plastic bags can be hazardous, even if the solids are noncombustible (e.g., silica).

13.5.3 Bags should be constructed of paper, plies of paper and plastic in which the nonconductive plastic film is covered by paper on both sides, or antistatic plastic. Because grounding clips can be impractical, such bags can be effectively grounded by contact with a grounded conductive vessel or skin contact with a grounded operator.

13.5.4 Fiber drums or packages should not have a loose plastic liner that can leave the package and behave like a plastic bag. All metal chimes should be grounded.

13.5.5 Personnel in the vicinity of openings of vessels that contain flammable liquids should be grounded, and special attention should be paid to housekeeping, because accumulation of nonconductive residues (e.g., resins) on the floor or on items such as grounding clips can impair electrical continuity.

13.6 Mixing Solids. Where solids are dissolved or dispersed into nonconductive liquids, the rate of charge generation can be large, depending on factors such as solids loading, particle size, and agitation rate. Dissipation of the charge frequently is achieved by raising the conductivity of the continuous phase by reformulation with conductive solvents or by the addition of antistatic additives. Alternatively, ignition hazards can be controlled by inerting.

13.7 Nonconductive Process Vessels.

13.7.1 In general, nonconductive process vessels should not be used with flammable liquids, which present external ignition risks if their outer surfaces become charged.

13.7.2 If a nonconductive vessel is to be used and the possibility exists that the atmosphere around the tank or in the vapor space is ignitible, the following criteria should be met to ensure the safe dissipation of charge and to prevent discharges:

(1) All conductive components (e.g., a metal rim and hatch cover) should be bonded together and grounded.
(2) Where the vessel is used to store nonconductive liquids, the following criteria should be met:
   (a) An enclosing, grounded conductive shield should be provided to prevent external discharges. This shield should be a grounded wire mesh buried in the tank wall and should enclose all external surfaces.
   (b) A metal plate should be installed to provide a path through which charge can flow from the liquid contents to ground. The metal plate should have a surface area not less than 500 cm^2/m^3 of tank volume and should be located at the bottom of the tank and bonded to ground.
(3) Where the vessel is used to store conductive liquids, an internal grounding cable extending from the top to the bottom of the vessel and connected to ground or a grounded fill line meeting the following criteria and extending to the bottom of the vessel should be provided:
   (a) The grounded fill line enters at the bottom of the vessel.
   (b) The grounded fill line does not introduce a spark promoter.

Chapter 14 Static Electricity Hazards of Operations in Process Vessels and Tanks

14.1 General. For the purpose of this chapter, the term "process vessel" or "vessel" can be considered synonymous with "process tank," "mixing tank," "tank," or "compartment."

14.2 Gauging and Sampling. Gauging and sampling operations, including temperature measurement, can introduce spark promoters into a process vessel, a storage tank, or a compartment therein. A conductive gauging well for manual sampling and gauging should be used.

14.2.1 Precautions. The precautions given in Section 14.2 should be taken where use of a gauging well is not possible, where the material stored is a nonconductor, or where the vapor space of the vessel or tank could be ignitible.

14.2.2 Manual Operations. Where gauging and sampling operations are conducted manually, the personnel grounding recommendations in Section 8.2 should be considered.

14.2.3 Materials. Gauging and sampling systems should be either completely conductive or completely nonconductive. For example, conductive sampling and gauging devices should be used with a conductive lowering device, such as a steel tape or cable.

14.2.3.1 Chains are not electrically continuous and should not be used in flammable atmospheres.

14.2.3.2 Conductive sampling and gauging devices, including the sampling container and the lowering device, should be properly bonded to the vessel, tank, or compartment.

14.2.3.3 The bonding specified in 14.2.3.2 should be accomplished by use of a bonding cable or by maintaining continuous metal-to-metal contact between the lowering device and the vessel hatch.

14.2.3.4 Ideally, if nonconductive hand gauging or sampling devices are used, no waiting period is needed after loading or filling; however, it should be noted that these devices might not retain the necessary level of nonconductivity due to environmental factors such as moisture or contamination. Therefore, an appropriate waiting period should be allowed where nonconductive devices are used.

14.2.3.5 Cord made from synthetic material such as nylon should not be used due to possible charging if it slips rapidly through gloved hands. Although natural cellulosic fiber cord can, in principle, be used, such cord is frequently composed of a natural–synthetic blend, with corresponding charge-generating ability.

14.2.4 Gauging. Where possible, gauging should be carried out using automatic gauging systems. These systems can be used safely in vessels, provided that the gauge floats and similar devices are electrically bonded to the vessel shell through a conductive lead-in tape or conductive guide wires. Free-floating, unbonded floats can be effective spark promoters and should be avoided. Noncontact gauging devices, such as radar and ultrasonic gauges, are also satisfactory, provided that electrical continuity is ensured. Isolated conductive components must not be used.

Copyright 2014 National Fire Protection Association (NFPA). Licensed, by agreement, for individual use and download on October 4, 2014 to LEADER and READER for designated user PATTARAPORN SRITRAKOOL. No other reproduction or transmission in any form permitted without written permission of NFPA. For inquires or to report unauthorized use, contact licensing@nfpa.org.

14.2.5 Waiting Period.

14.2.5.1 Depending on the size of the vessel and the conductivity of the product being loaded, a sufficient waiting period should be allowed for accumulated charge to dissipate.

14.2.5.2 A 30-minute waiting period should be allowed before the gauging or sampling of vessels, tanks, or compartments greater than 40 m^3, unless a gauging well is used. The waiting period before the gauging or sampling of smaller vessels can be reduced to 5 minutes for vessels between 20 m^3 and 40 m^3 and to 1 minute for vessels less than 20 m^3. Longer waiting periods might be appropriate for very low conductivity liquids ($\sigma < 2$ pS/m) or nonconductive liquids that contain a second dispersed phase [such as a Class I liquid with more than 0.5 percent water (weight basis)]. If a gauging well is used, a waiting period is unnecessary.

14.3 Cleaning Vessels and Tanks.

14.3.1 Water Washing.

14.3.1.1 The mist created in a vessel by water spraying can be highly charged. This is a particular problem with vessels larger than 100 m^3, due to the size of the mist cloud that can form. Water washing using sprays should be done only in an inerted or nonflammable atmosphere.

14.3.1.2 Although specifically written for marine cargo tanks, the *International Safety Guide for Oil Tankers and Terminals* (ISGOTT) presents a comprehensive discussion of cleaning. Vessels less than 100 m^3 and with all conductive components grounded have a negligible discharge hazard. Where a possibility of steam entering the vessel during the water-washing process exists, the precautions in 14.3.3 should be followed.

14.3.2 Solvent Washing. Mist charge densities created by flammable solvents are similar to those from water washing, and similar precautions should be taken regarding grounding of conductive components.

14.3.2.1 Where an ignitible atmosphere or mist cannot be avoided because of the type of solvent or cleaning process used, the vessel being cleaned should be inerted or enriched to reduce the likelihood of ignition during the cleaning process.

14.3.2.2 Where the vessel is not inerted or enriched and an ignitible atmosphere is present, the following precautions should be considered where solvent is used as a cleaning agent:

(1) The solvent should be conductive.
(2) Where a solvent blend, such as reclaimed solvent, is used, the conductivity should be checked periodically.
(3) High flash point materials (at least 9°C above the maximum operating temperature during cleaning) should be used, and the flash point should be confirmed on a daily basis.
(4) The cleaning system should be conductive and bonded to the vessel, and continuity tests of all bonded equipment should be done periodically.
(5) Ungrounded conductive objects should be treated in accordance with the following:
    (a) They should not be introduced into the vessel during the cleaning process.
    (b) They should not be introduced into the vessel for a sufficient period of time after the cleaning process, which might take several hours due to the generation of mist.

14.3.3 Steam Cleaning. Steam cleaning can create very large charge densities with correspondingly large space charge potentials that increase with the size of the vessel. Therefore, the following precautions should be taken:

(1) Vessels larger than 4 m^3 should be inerted before steam cleaning.
(2) All components of the steaming system should be conductive and grounded.
(3) All conductive components of the vessel should be bonded and grounded.

14.3.4 Internal Grit Blasting.

14.3.4.1 Where possible, tanks and process vessels should be clean and free of ignitible materials (no more than 10 percent of the LFL).

14.3.4.2 Hose used for grit blasting should be grounded, and the resistance to ground from any part of the hose assembly, especially the nozzle, should not exceed 10^6 ohms. *(See Section 10.3.)*

14.4* Vacuum Cleaning. Collecting liquids and solids in an ignitible atmosphere using a vacuum cleaner can create a significant hazard due to ignition from static electric discharge. If it is necessary to use such equipment in a process area, the hazards and the procedures for safe use should be carefully reviewed and clearly communicated to the potential users. If electrically powered, the vacuum cleaner should be listed for use in the applicable hazardous (classified) location, as defined in Article 500 of *NFPA 70, National Electrical Code*. Air-operated vacuum cleaners are available for this application. Special consideration should be given to grounding the vacuum hose and the nozzle according to the manufacturers' recommendations, regardless of the type of vacuum used.

14.5 Clean Gas Flows.

14.5.1 Usually a negligible generation of static electricity occurs in single-phase gas flow. The presence of solids such as pipe scale or suspended liquids such as water or condensate will create charge, which is carried by the gas phase. The impact of the charged stream on ungrounded objects can then create spark hazards. For example, carbon dioxide discharged under pressure will form charged solid "snow." In an ignitible atmosphere, this phenomenon can create an ignition hazard. For that reason, carbon dioxide from high-pressure cylinders or fire extinguishers should never be used to inert a container or vessel.

14.5.2 Gases with very low ignition energies, such as acetylene and hydrogen, that contain suspended material can be ignited by corona discharge where they are escaping from stacks at high velocity. This phenomenon is associated with electrical breakdown at the periphery of the charged stream being vented. Such discharges can occur even if the equipment is properly grounded.

14.6 Ancillary Operations. (Reserved)

Chapter 15 Powders and Dusts

15.1 General. Powders include pellets, granules, dust particles, and other particulate solids. Pellets have diameters greater than 2 mm, granules have diameters between 420 µm and 2 mm, and dusts have diameters of 420 µm or less. It should be noted that aggregates of pellets and granules often contain a significant amount of dust. The movement of powders in industrial operations commonly generates static elec-

Copyright 2014 National Fire Protection Association (NFPA). Licensed, by agreement, for individual use and download on October 4, 2014 to LEADER and READER for designated user PATTARAPORN SRITRAKOOL. No other reproduction or transmission in any form permitted without written permission of NFPA. For inquires or to report unauthorized use, contact licensing@nfpa.org.

tric charges. The accumulation of these charges and their subsequent discharge can lead to fires and explosions. *(See NFPA 654, Standard for the Prevention of Fire and Dust Explosions from the Manufacturing, Processing, and Handling of Combustible Particulate Solids.)*

15.2 Combustibility of Dust Clouds.

15.2.1 A *combustible dust* is defined as a combustible particulate solid that presents a fire or deflagration hazard when suspended in air or other oxidizing medium over a range of concentrations, regardless of particle size or shape.

15.2.2 For a static electric discharge to ignite a combustible dust, the following four conditions need to be met:

(1) An effective means of separating charge must be present.
(2) A means of accumulating the separated charges and maintaining a difference of electrical potential must be available.
(3) A discharge of the static electricity of adequate energy must be possible.
(4) The discharge must occur in an ignitible mixture of the dust.

15.2.3 A sufficient amount of dust suspended in air needs to be present for an ignition to achieve sustained combustion. This minimum amount is called the *minimum explosible concentration* (MEC). It is the smallest concentration, expressed in mass per unit volume, for a given particle size that will support a deflagration where uniformly suspended in air. *(In this chapter, air is assumed to be the supporting atmosphere unless another oxidizing atmosphere is specified.)*

15.2.4* For a dust cloud to be ignited by a static electric discharge, the discharge needs to have enough energy density, both in space and in time, to effect ignition. For discharges typical of sparks that can be produced by charged, ungrounded conductors, ignition of a dust cloud is possible if the energy in the discharge exceeds the minimum ignition energy (MIE) of the dust. The MIE is a measure of the minimum amount of capacitive spark energy necessary to ignite a dust cloud of optimal concentration.

15.3 Mechanisms of Static Electric Charging.

15.3.1 Contact static electric charging occurs extensively in the movement of powders, both by surface contact and separation between powders and surfaces and by contact and separation between individual powder particles. The charging characteristics of particles often are determined as much by surface contamination as by their chemical characteristics; thus, the magnitude and polarity of a charge are difficult to predict.

15.3.2 Charging can be expected any time a powder comes into contact with another surface, such as in sieving, pouring, scrolling, grinding, micronizing, sliding, and pneumatic conveying. In those operations, the more vigorous the contact, the more charge is generated, as shown in Table 15.3.2. The table shows that a wide range of charge densities is possible in a given operation; the actual values will depend on both the product and the operation.

15.3.3 An upper limit to the amount of charge that can be carried by a powder suspended in a gas exists. This limit is set by the strength of the electric field at the surface of the particle and depends on the surface charge density, as well as the particle's size and shape. For well-dispersed particles, the maximum surface charge density is of the order of 27 $\mu C/m^2$.

Table 15.3.2 Typical Charge Levels on Medium-Resistivity Powders Emerging from Various Powder Operations (Before Compaction)

Operation	Mass Charge Density (μC/kg)
Sieving	10^{-3} to 10^{-5}
Pouring	10^{-1} to 10^{-3}
Auger or screw-feed transfer	10^{-2} to 1.0
Grinding	10^{-1} to 1.0
Micronizing	10^{2} to 10^{-1}
Pneumatic conveying	10^{3} to 10^{-1}

Source: BS 5958, *Code of Practice for Control of Undesirable Static Electricity*, Part 1, General Considerations.

This value can be used to estimate maximum charge-to-mass ratios from particle diameter and density information.

15.3.4 Electrostatic charge accumulation in particulate solids can be minimized by decreasing the powder's bulk resistivity by increasing the moisture content of the powder, by reducing conveying speed or throughput, or by substituting processes that result in less particle contact per unit time (e.g., gravity transfer vs. pneumatic conveying). The use of ionization to reduce accumulated charge is also effective for some applications.

15.4 Retention of Static Electric Charge.

15.4.1 Bulk powder can retain a static electric charge, depending on its bulk resistivity and its bulk dielectric constant. The relaxation time is expressed by the following equation:

$$\tau = \rho\varepsilon \qquad \textbf{(15.4.1)}$$

where:
τ = charge relaxation time constant (seconds)
ρ = volume resistivity (ohm-meters)
ε = permittivity of material (farads per meter)

15.4.2 The ability of a solid to transmit electric charges is characterized by its volume resistivity.

15.4.3 Powders are divided into three groups:

(1) Low-resistivity powders have volume resistivities of up to 10^6 ohm-m, including metals, coal dust, and carbon black.
(2) Medium-resistivity powders have volume resistivities between 10^6 ohm-m and 10^{10} ohm-m, including many organic powders and agricultural products.
(3) High-resistivity powders have volume resistivities above 10^{10} ohm-m, including organic powders, synthetic polymers, and quartz.

15.4.3.1 Low-resistivity powders can become charged during flow. The charge rapidly dissipates where the powder is conveyed into a grounded container. However, if the powder is conveyed into a nonconductive container, the accumulated charge can result in an incendive spark from the charged mass of solid material.

15.4.3.2 Where a medium-resistivity powder comes to rest in bulk, the charge retained depends on the resistance between the powder and ground. If the powder is placed in a grounded container, charge retention is determined by the bulk volume resistivity of the powder, which includes the interparticle resistance, as governed by the relationship expressed in Equation 15.4.1. If the powder is placed in a nonconductive container,

Copyright 2014 National Fire Protection Association (NFPA). Licensed, by agreement, for individual use and download on October 4, 2014 to LEADER and READER for designated user PATTARAPORN SRITRAKOOL. No other reproduction or transmission in any form permitted without written permission of NFPA. For inquires or to report unauthorized use, contact licensing@nfpa.org.

charge retention is determined by the resistance of the container. The special significance of medium-resistivity powders is that they are relatively safe during handling because they do not produce bulking brush discharges or sparks.

15.4.3.3 High-resistivity powders do not produce spark discharges in themselves, but they can produce other types of discharge, such as corona, brush, bulking brush, and propagating brush discharges *(see Section 5.5)*. High-resistivity powders lose charge at a slow rate determined by their volume resistivity, even in properly grounded containers. Many high-resistivity powders are also hydrophobic and, in bulk, are capable of retaining charge for hours or even days. High-resistivity powders, such as thermoplastic resins, can have bulk resistivities up to about 10^{16} ohm-m.

15.5 Discharges in Powder Operations.

15.5.1 Spark Discharge.

15.5.1.1 Where spark discharges occur from conductors, the energy in the spark can be estimated from the following equations or from the nomograph in Figure 5.5.3.3:

$$W = \frac{1}{2}CV^2 \qquad \textbf{(15.5.1.1a)}$$

$$W = \frac{1}{2}QV \qquad \textbf{(15.5.1.1b)}$$

$$W = \frac{1}{2}\left(\frac{Q^2}{C}\right) \qquad \textbf{(15.5.1.1c)}$$

$$Q = CV \qquad \textbf{(15.5.1.1d)}$$

where:
W = energy (joules)
C = capacitance (farads)
V = potential difference (volts)
Q = charge (coulombs)

15.5.1.2 It should be noted that Equations 15.5.1.1a through 15.5.1.1d apply only to capacitive discharges from conductors and cannot be applied to discharges from insulators. Discharge energies so estimated can be compared with the MIE of the dust to provide an insight into the probability of ignition by capacitive spark discharge *(see 5.5.3)*. Layers of combustible dusts can be ignited by capacitive spark discharge, which can lead to secondary dust explosions. For a dust layer, there is no correlation with the MIE for dust cloud ignition. Capacitive spark discharges must be avoided by grounding all conductive containers, equipment, and products. Personnel who are exposed to clouds of combustible dust with an MIE less than 30 mJ should also be grounded.

15.5.2 Corona and Brush Discharge. Where large amounts of powder having medium or high resistivities are handled, corona and brush discharges are to be expected. No evidence is available, however, that a corona discharge is capable of igniting a dust cloud. Likewise, there is no evidence suggesting that brush discharges are capable of igniting a dust cloud, provided that no flammable gas or vapor is present in the dust cloud.

15.5.3 Propagating Brush Discharge. Because propagating brush discharges can have energies greater than 1 J, they should be considered capable of igniting both clouds and layers of combustible dusts.

15.5.4 Bulking Brush Discharge (Cone Discharge).

15.5.4.1 Where powders that have resistivities greater than about 10^9 ohm-m are put into grounded conductive containers, they usually dissipate their charges by conduction at a rate slower than that of the charge accumulated in the loading process. The charge is therefore compacted, and discharges occur from the bulking point (where the particles first contact the heap) to the walls of the container. These discharges are referred to as *bulking brush discharges*. Experience indicates that these discharges are not capable of igniting dusts having MIEs greater than 20 mJ. However, such discharges have been attributed to explosions of dusts having MIEs less than 20 mJ.

15.5.4.2 During the compaction process, the energy in the discharge increases as the particle size increases. Therefore, it can be expected that systems most at risk are those involving pellets having an appreciable fraction of fines (dust).

15.5.5 Lightning-Like Discharges. While collection of individual particle charges to create a lightning-like discharge is seen in nature (thunderstorms, volcanic eruptions), such discharges have not been seen in industrial operations.

15.6* Discharges During Filling Operations. During the filling of large silos with powders, granules, and pellets, surface flashes up to a meter in length have been observed. These discharges, referred to as *bulking brush (cone) discharges*, are accompanied by a crackling sound capable of being heard above the noise of the material transfer. Bulking brush discharges have a maximum effective energy of 10 mJ to 25 mJ and are believed responsible for dust explosions in grounded silos. Similar discharges are observed during the filling of tank vehicles with nonconductive liquids. In those cases, the phenomenon is known as a *surface streamer* or *go-devil*. *(See Figure 15.6.)*

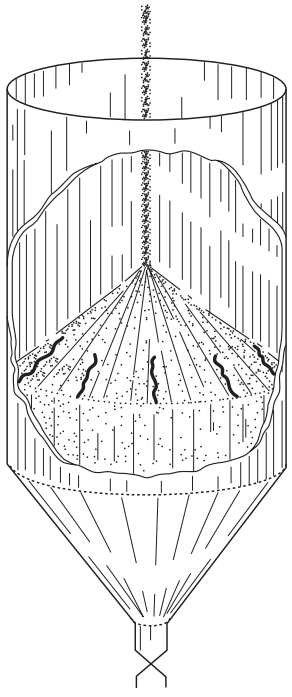

FIGURE 15.6 Bulking Brush Discharge During Filling of Silo with Bulk Powder.

Copyright 2014 National Fire Protection Association (NFPA). Licensed, by agreement, for individual use and download on October 4, 2014 to LEADER and READER for designated user PATTARAPORN SRITRAKOOL. No other reproduction or transmission in any form permitted without written permission of NFPA. For inquires or to report unauthorized use, contact licensing@nfpa.org.

15.7 Pneumatic Transport Systems.

15.7.1 Pneumatic transport of powdered material through pipes or ducts can produce a static electric charge on both the product being transported and the conduit. This static electric charge remains on the material as it exits the system. Precautions against accumulation of charge should be taken where the material is collected.

15.7.2 Pipes and ducts should be metal and should be grounded.

15.7.2.1 Equipment to which the conduits connect should be metal and grounded to dissipate the charge impressed on it by the transport of the material.

15.7.2.2 Where the use of pipe-joining methods or installation of piping components results in an interruption of continuity of the ground path, one of the following criteria should be met:

(1) A jumper cable should be used to maintain continuity.
(2) An independent ground should be provided for the isolated section of the conduit, as shown in Figure 15.7.2.2.

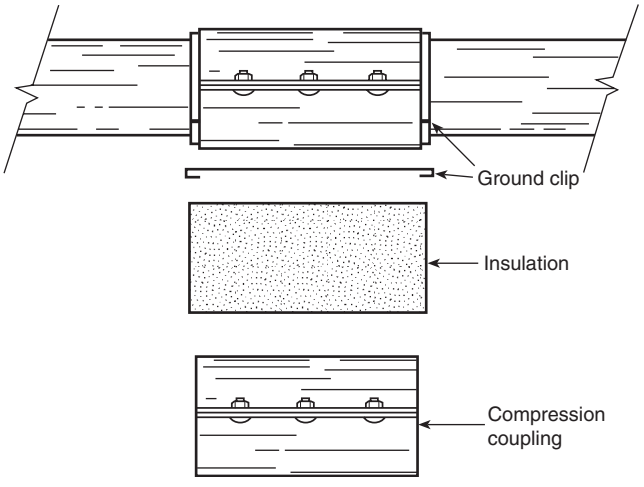

FIGURE 15.7.2.2 Compression Fitting for Pneumatic Transport Duct. ***(Source: T. H. Pratt, Electrostatic Ignitions of Fires and Explosions, p. 136.)***

15.7.3 Nonconductive pipe or ductwork should not be used.

15.7.4 Short lengths of transparent plastic should not be used as flow visualizers, because they have been known to give rise to propagating brush discharges capable of igniting dusts.

15.8* Flexible Hose.

15.8.1 Significant static charge can be generated where nonconductive hoses are used for solids transport. This in turn can result in various types of electrostatic discharge. Such hoses should be used only in areas that are not hazardous (classified) locations per Article 500 of *NFPA 70, National Electrical Code*, and where solids are not capable of producing ignitible dust or vapor. Additionally, a severe shock hazard to personnel might exist.

15.8.2 Where nonconductive hose containing a spiral reinforcing wire is used, the wire should make good contact with metal end couplings. Hose with more than one internal spiral wire should not be used, because it is not possible to determine if one of the spirals has lost its continuity.

15.8.3 Conductive or static-dissipative hoses should be used for transport of combustible dust and in situations where a flammable external atmosphere might exist. Such hoses should be adequately connected to conductive end fittings and properly grounded.

15.9 Flexible Boots and Socks.

15.9.1 Flexible boots and socks are commonly used for gravity transfer operations. Flexible boots typically are made of plastic or rubber, while flexible socks typically are made of woven fabric. A nonconductive boot could give rise to either brush discharge or propagating brush discharge. Propagating brush discharge cannot happen with a sock, because of the low breakdown strength of the air gaps in the weave. However, there are conditions where socks can produce brush discharges (e.g., where used with flexible intermediate bulk containers). *(See Section 16.6.)*

15.9.2 Where combustible dusts are handled, the end-to-end resistance of boots and socks should be less than 10^6 ohms, as measured using a megohmmeter.

15.9.3 Flexible connections should not be depended on for a bond or ground connection between process equipment. Separate bonding or grounding connections should be used.

15.10 Fabric Filters.

15.10.1 As dusts are drawn or blown into a filtration system (commonly called a "bag house" and hereafter referred to as a "housing"), they necessarily carry with them a static electric charge, the magnitude of which depends on the characteristics of the dust and the process, as illustrated in Table 15.3.2. The charge remains on the dust and accumulates on the surfaces of the filters within the housing. It is therefore important to keep all conductive equipment grounded to prevent the induction of this accumulated charge onto conductive components that could have inadvertently become ungrounded. Such induction is particularly true in the case of cage assemblies on which the filters are mounted.

15.10.2 If cage assemblies are not well grounded, capacitive spark discharge can occur from the ungrounded cages to either the structure of the housing or adjacent cage assemblies. Many times the filters have metal braid pigtails attached to their cuffs, the notion being that the pigtail can simply be brought through the cage and bonded to the tube sheet. This method of grounding the cage is not always successful. Furthermore, the reason for the pigtail is often misunderstood. Because the filter is nonconductive, the filter itself is not grounded. It is therefore useless to extend the metal braid down the entire length of the filter. *(See Figure 15.10.2.)*

15.10.3 Filters and cages should be engineered so that a positive ground connection is always ensured during maintenance, even if personnel are inexperienced or inattentive. One way of ensuring this connection is by sewing two metal braids into the cuffs of the filters, 180 degrees apart. Each braid is continuous and is sewn up the inside of the cuff, across the top, and down the outside of the cuff. This method ensures that the braids always make a positive contact with the cage, the venturi, and the clamp and that such an arrangement withstands the rigors of the operation. In any case, the resistance between the cage and ground should be less than 10 ohms.

15.10.4 In general, conductive filter media provide no extra protection where nonconductive combustible dusts alone are handled. In fact, such filters could pose an additional sparking

Copyright 2014 National Fire Protection Association (NFPA). Licensed, by agreement, for individual use and download on October 4, 2014 to LEADER and READER for designated user PATTARAPORN SRITRAKOOL. No other reproduction or transmission in any form permitted without written permission of NFPA. For inquires or to report unauthorized use, contact licensing@nfpa.org.

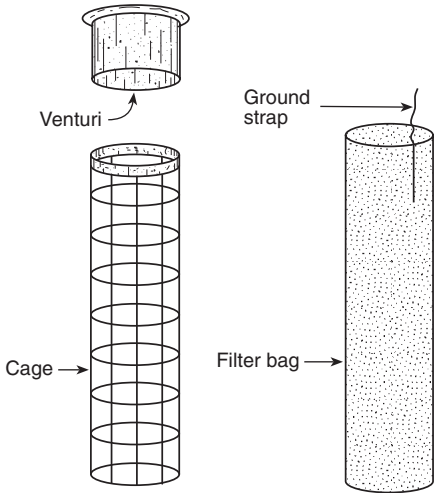

FIGURE 15.10.2 Arrangement of Cage and Filter Bag. ***(Source: T. H. Pratt, Electrostatic Ignitions of Fires and Explosions, p. 134.)***

hazard if they are improperly grounded or if they become loose and fall into the bottom of the housing. However, the use of such bags should be considered if hybrid combustible dust–flammable vapor mixtures having MIEs of less than 4 mJ are present or where combustible conductive dusts are handled.

15.11* Hybrid Mixtures.

15.11.1 The term *hybrid mixture* applies to any mixture of suspended combustible dust and flammable gas or vapor where neither the dust itself nor the gas or vapor itself is present in sufficient quantity to support combustion but where the mixture of the two can support combustion. In general, vapor concentrations greater than 20 percent of the lower flammable limit of the vapor are necessary for such mixtures to exist. Hybrid mixtures pose particular problems because they combine the problems of the high charge densities of powder-handling operations with the low ignition energies of flammable vapors. The MIE of a hybrid mixture is difficult to assess, but a conservative estimate can be made by assuming that the MIE of the mixture is at or near the MIE of the gas alone. Because hybrid mixtures contain a flammable gas or vapor, they can be ignited by brush discharge.

15.11.2 Powders that contain enough solvent (i.e., greater than 0.5 percent by weight) so that significant concentrations of solvent vapor can accumulate in the operations in which they are handled are referred to as *solvent-wet powders*. In such cases, there will be the potential for developing an ignitible atmosphere in the storage vessel. Appropriate precautions must be taken to address this hazard. Even at lower concentrations, a hazard might exist if the solvent-wet powder is held for extended periods of time or at elevated temperatures.

15.12* Manual Addition of Powders to Flammable Liquids.

15.12.1 The most frequent cause of static electric ignitions in process vessels is the addition of solids to flammable liquids in the vessels. Even where the vessel is inerted, large additions of solids introduce air into the vessel while expelling flammable vapor from the vessel. The sudden addition of a large volume of solids can also result in static discharge from a floating pile of charged powder. See Section 13.5 for general precautions on the addition of powders to vessels that contain flammable liquids.

15.12.1.1 Manual addition of solids through an open port or manway should be done only in 25 kg batches.

15.12.1.2 Batch additions larger than 25 kg [e.g., flexible intermediate bulk containers (FIBCs) *(see Section 16.1)*] should be done through an intermediate hopper with a rotary valve or an equivalent arrangement. The hopper can be separately inerted to reduce air entrainment into the mixing vessel, while expulsion of vapor into the operating area can be avoided by venting the vessel to a safe location.

15.12.1.3 The addition of solids from nonconductive plastic bags can be hazardous, even if the solids are noncombustible (e.g., silica). Bags should be constructed of static-dissipative plastic or paper. Paper bags containing a nonconductive coating on the inside surface are acceptable provided the coating is less than 2 mm thick. Because grounding clips can be impractical, such bags can be effectively grounded by contact with a grounded conductive vessel or loading chute or through a grounded operator, either by direct contact with the skin or by means of static-dissipative gloves. Where grounding is via the operator, static-dissipative shoes should also be used and it should be ensured that the floor surface resistance is less than 10^6 ohms.

15.12.1.4 Fiber drums or packages should not have a loose plastic liner that can leave the package and behave like a plastic bag. In some cases, it is possible to eliminate the flammable vapor atmosphere by cooling the liquid well below flash point prior to solids addition. However, where combustible powders are handled, consideration must be given to the potential for formation of hybrid mixtures.

15.12.1.5 Metal chimes should be grounded.

15.12.1.6 Personnel in the vicinity of openings of vessels that contain flammable liquids should be grounded, and special attention should be paid to housekeeping, because accumulation of nonconductive residues (e.g., resins) on the floor or on items such as grounding clips can impair electrical continuity.

15.12.2 Powder should not be emptied from any nonconductive container or plastic bag into a vessel that contains a flammable atmosphere.

15.12.3 Direct emptying of powders from nonconductive plastic bags into a vessel that contains a flammable atmosphere should be strictly prohibited.

15.12.4 Where a thorough understanding of the process exists and where the vessel does not contain an ignitible atmosphere, adding the powder to the vessel before adding the liquid might be practical.

15.13 Bulk Storage.

15.13.1 Where powders are moved into bulk storage (e.g., silos, rail cars, trucks, IBCs, or FIBCs), the powder is compacted by the force of gravity. The compaction process is accompanied by bulking brush discharge, as explained in 15.5.4. In the compaction process, the energy of the discharge increases as the particle size increases. Therefore, the systems most at risk are pellets with an appreciable fraction of fines (dust).

15.13.2 The exact conditions for ignition-capable bulking brush discharge are not well understood. However, the following general factors that are known to increase its probability have been identified by Glor in *Electrostatic Hazards in Powder Handling*:

Copyright 2014 National Fire Protection Association (NFPA). Licensed, by agreement, for individual use and download on October 4, 2014 to LEADER and READER for designated user PATTARAPORN SRITRAKOOL. No other reproduction or transmission in any form permitted without written permission of NFPA. For inquires or to report unauthorized use, contact licensing@nfpa.org.

(1) Increase in the resistivity of the powder greater than 10^{10} ohm-m
(2) Increase in the particle size of the powder greater than 1 mm
(3) Increase in the charge density of the powder greater than 1 μC/kg
(4) Increase in filling rate as follows:
    (a) For granules with a diameter greater than 1 mm to 2 mm, an increase greater than 20,000 kg/hr
    (b) For granules with a diameter of about 0.8 mm, an increase greater than 20,000 to 30,000 kg/hr

15.13.3 In general, the use of nonconductive containers for storage of combustible conductive powders should be avoided. Where this is not possible, grounding of the powder should be provided, for instance, by inserting a grounded rod into the container prior to filling.

Chapter 16 Intermediate Bulk Containers (IBCs) for Powders

16.1 General. The discussion and precautions for powders and granular solids, as set forth in Chapter 15, also apply to operations that involve handling these materials in intermediate bulk containers (IBCs).

16.1.1 Static electric charges are generated in granular materials during the filling and emptying of IBCs. These charges result from movement and the rubbing of the granules against process equipment or against each other.

16.1.2 The amount of charge that can be accumulated on a bed of a powdered material in a grounded container depends on the resistivity of the powder, not the resistivity of a block of the material. The higher the resistivity, the lower the apparent conductivity and the longer a charge will be retained. In cases of very large resistivities, charges will relax slowly and can remain on beds of material for appreciable periods. Thus, generation and relaxation occur simultaneously where granular materials are moved about. Where the rate of generation exceeds the rate of relaxation, significant charges can accumulate.

16.2 Types of Discharge. Where a static electric charge accumulates on bulk containers or associated process equipment, the following four types of discharge can occur *(see Chapter 5)*:

(1) Spark discharge
(2) Brush discharge
(3) Propagating brush discharge
(4) Bulking brush discharge

16.2.1 Spark discharges can take place between two conductors at different potentials and can release energy capable of igniting atmospheres that contain flammable gases or vapors or combustible dusts, depending on process conditions. An example of a situation in which such a discharge can occur is a conductor that is isolated from ground and located in a bin of material.

16.2.2 Brush discharge usually is not a concern in the normal handling of granular materials. However, brush discharge can be a source of ignition where flammable gases or vapors are present, as in the handling of hybrid mixtures. Such situations should be avoided if possible.

16.2.3 Propagating brush discharges typically contain energies of 1 J or greater, depending on process conditions. These discharges can ignite most flammable atmospheres.

16.2.4 Bulking brush discharges are believed to have an upper energy limit of 30 mJ in conductive containers less than 3 m in diameter; values for nonconductive containers might be higher. To minimize the risks associated with bulking brush discharge, powders that have minimum ignition energies (MIEs) of 10 mJ or less should be loaded only into containers of 2 m^3 or less, unless the vessel is inerted.

16.3 Granular Material.

16.3.1 In general, the formation of combustible dust clouds is not possible for spherical particles greater than 420 μm in diameter. However, attrition of coarse particles during processing can result in fine particles that are capable of forming such clouds. The presence of fine particles in "as received" coarse granular material should also be considered. Particles consisting of fibers and very thin flakes might be capable of forming combustible dust clouds even if their major dimension is greater than 420 μm.

16.3.2 Experience has shown that where powders have resistivities of less than 10^8 ohm-m, static electric charges usually relax rapidly enough to prevent their accumulation in the bulk granular material.

16.4 Conductive Intermediate Bulk Containers (IBCs).

16.4.1 Conductive IBCs (e.g., those constructed of metal) should be grounded during all operations in areas where an ignitible atmosphere exists.

16.4.2 The following are examples of engineering and administrative controls that should be considered to ensure that grounding of conductive containers and associated conductive equipment is accomplished during all operations:

(1) Metal funnels should be grounded.
(2) Flexible fill pipes should have any conductive components, including internal stiffening wires, connected to ground.

16.4.3 Where a nonconductive material is transferred into a conductive IBC that is grounded, any charge that has accumulated on the material will remain on the material. The process of relaxation is the slow migration of the charges through the material to the opposite charges on the wall. While this relaxation process is occurring, which can last a few seconds or many minutes, depending on the conductivity of the material, an electric field still exists at the surface of the material.

16.4.4 In the case of IBCs with open tops, the electric field can induce charges on other conductors that might be present, including ungrounded personnel. Thus, induction of surface charges onto other ungrounded conductors can occur even where conductive IBCs are properly grounded. Appropriate precautions should be taken.

16.4.5 IBCs made of conductive materials and nonconductive liners should be used only if the liners are essential (e.g., to maintain compatibility between the IBC and the material being handled). The risk of ignition and the possibility of electric shock from propagating brush discharge depend heavily on the thickness and resistivity of the liner, the handling procedure, the electrical properties of the material being handled, and the incendive nature of any combustible material that might be present.

16.4.6 In general, propagating brush discharge will not occur if the nonconductive liner has a breakdown voltage lower than 4 kV. Each situation should be considered individually.

Copyright 2014 National Fire Protection Association (NFPA). Licensed, by agreement, for individual use and download on October 4, 2014 to LEADER and READER for designated user PATTARAPORN SRITRAKOOL. No other reproduction or transmission in any form permitted without written permission of NFPA. For inquires or to report unauthorized use, contact licensing@nfpa.org.

16.5 Nonconductive Intermediate Bulk Containers (IBCs).

16.5.1 The term *nonconductive* applies to any IBC that has a volume resistivity greater than 10^{10} ohm-m or a surface resistivity greater than 10^{11} ohms.

16.5.2 Where a material is transferred into a nonconductive IBC, the container material will hinder the relaxation to ground of any static electric charge that is present on the material. In this instance, even conductive contents can accumulate charge.

16.5.3 Nonconductive IBCs should not be filled or emptied in areas where easily ignitible atmospheres (i.e., gases, flammable vapors, sensitive dusts, and hybrid mixtures with MIEs of less than 10 mJ) are present.

16.5.4 Where powders are to be added to flammable liquids from nonconductive containers, the receiving system should be closed and inerted.

16.5.5 Nonconductive IBCs should not be used with solvent-wet powders (i.e., powders containing more than 0.2 percent by weight of solvent) in locations where the ambient temperature is near or above the flash point of the solvent.

16.5.6 If a nonconductive IBC is moved into a location where flammable gases or vapors are also present, rubbing of the container should be avoided.

16.6 Flexible Intermediate Bulk Containers (FIBCs).

16.6.1 Description. Flexible intermediate bulk containers (FIBCs) are basically very large fabric bags supported in a frame. They are more convenient than rigid IBCs because they can be fully collapsed after use, taking up little storage space.

16.6.1.1 The fabric is usually polypropylene and the fabric is sewn to form a three-dimensional cube or rectangle with lifting straps. An FIBC can be filled with a powder or granular material and moved about with conventional materials-handling equipment.

16.6.1.2 An advantage of FIBCs is that they can be unloaded quickly, typically 300 kg to 500 kg in 30 sec or less. Under common conditions of use, rates at which static electric charges are generated can often exceed the rates at which the charges can relax and accumulation of a static electric charge can be expected.

16.6.2 Charge Generation. Static electric charges can be generated during the filling and emptying of FIBCs and can accumulate on both the contents and the fabric of the FIBC. If the accumulated charge is strong enough and is released in the presence of an ignitible atmosphere, ignition can occur.

16.6.3 Types of FIBCs and Their Inner Liners. IEC 61340-4-4, *Electrostatics—Part 4–4: Standard test methods for specific applications — Electrostatic classification of flexible intermediate bulk containers (FIBC),* describes four types of FIBCs, defined by the construction of the FIBCs, the nature of their intended operation, and associated performance requirements: Type A, Type B, Type C, and Type D. FIBCs should be tested in accordance with the requirements and test procedures specified in IEC 61340-4-4 and in accordance with their intended use before being used in hazardous environments. See Table 16.6.3 for a summary of FIBC use, as described in 16.6.4 through 16.6.7. The subject of inner liners is not addressed in this recommended practice. Guidance on the safe use of inner liners is given in IEC 61340-4-4.

16.6.4 Type A FIBCs.

16.6.4.1 Type A FIBCs are constructed of nonconductive materials (e.g., polypropylene fabric with polyester stitching) and have no special features incorporated in their design to control static electric discharge hazards. Type A FIBCs can be used for materials that do not form ignitible atmospheres in normal handling operations.

16.6.4.2 Experience has shown that propagating brush discharges can occur in Type A FIBCs. The energy released in propagating brush discharges can reach 1000 mJ. The following criteria apply:

(1) Type A FIBCs should not be used for powder or granular materials that have an MIE of less than 1000 mJ.
(2) Type A FIBCs should never be used in areas where a flammable gas or vapor is present.
(3) Type A FIBCs should not be used for conductive powders ($\rho_v < 1$ megohm-m).

16.6.5 Type B FIBCs.

16.6.5.1 Type B FIBCs, like Type A FIBCs, are constructed of nonconductive materials (e.g., polypropylene fabric with polyester stitching). However, the material of construction of Type B FIBCs is designed to have a breakdown voltage less than 6 kV and hence control static electric discharge hazards.

16.6.5.2 Type B FIBCs are designed to avoid the occurrence of propagating brush discharges. Propagating brush discharges can occur in FIBCs only if the materials from which FIBCs are constructed have sufficient electrical strength to sustain high surface charge densities. Research has shown that propagating brush discharges cannot occur if the breakdown voltage of the materials used to construct FIBCs is less than 6 kV.

16.6.5.3 Filling charged, high-resistivity powder into FIBCs can generate a region of very high space charge density within the heap of bulked powder. This leads to high electrical fields at the top of the heap. Under these circumstances, cone discharges running along the surface have been observed. Although cone discharge can occur in all forms of containers, including grounded conductive containers, cone discharges can have a much higher energy in Type B FIBCs than in grounded conductive containers, where the walls of the containers will be at close to zero potential. Energy calculations predict that in Type B FIBCs, cone discharges might be incendiary to powders with an MIE of up to 3 mJ.

16.6.5.4 Since Type B FIBCs have no mechanism for dissipating electrostatic charge, brush discharges might occur that can ignite flammable gases and vapors. The following criteria apply:

(1) Type B FIBCs should be made from materials with breakdown voltage less than 6 kV.
(2) Type B FIBCs should not be used for powder or granular materials that have an MIE of 3 mJ or less.
(3) Type B FIBCs should never be used in areas where a flammable gas or vapor is present.
(4) Type B FIBCs should not be used for conductive powders ($\rho_v < 1$ megohm-m).

16.6.6 Type C FIBCs.

16.6.6.1 Type C FIBCs are constructed entirely from conductive material or insulating material that contains fully interconnected conductive threads or tapes with specific spacing and can be treated the same as conductive IBCs, as specified in

Copyright 2014 National Fire Protection Association (NFPA). Licensed, by agreement, for individual use and download on October 4, 2014 to LEADER and READER for designated user PATTARAPORN SRITRAKOOL. No other reproduction or transmission in any form permitted without written permission of NFPA. For inquires or to report unauthorized use, contact licensing@nfpa.org.

Table 16.6.3 Use of Different Types of FIBCs

Bulk Product in FIBC	Surroundings		
MIE of dust*	Nonflammable Atmosphere	Class II, Divisions 1 and 2 (1000 mJ ≥ MIE > 3 mJ)*	Class I, Divisions 1 and 2 (Gas Groups C and D) or Class II, Divisions 1 and 2 (MIE ≤ 3 mJ)*
MIE > 1000 mJ	A, B, C, D	B, C, D	C, D†
1000 mJ ≥ MIE > 3 mJ	B, C, D	B, C, D	C, D†
MIE ≤ 3 mJ	C, D	C, D	C, D†

Notes:
(1) Additional precautions usually are necessary when a flammable gas or vapor atmosphere is present inside the FIBC, e.g., in the case of solvent wet powders.
(2) Nonflammable atmosphere includes dusts having an MIE > 1000 mJ.
*Measured in accordance with IEC 61241-2-3, *Electrical apparatus for use in the presence of combustible dust — Part 2: Test methods — Section 3: Method for determining minimum ignition energy of dust/air mixtures*; capacitive discharge circuit (no added inductance).
†Use of Type D limited to gas groups C and D with MIE ≥ 0.14 mJ.

Section 16.4. It is essential that Type C FIBCs be grounded during filling and emptying operations.

16.6.6.2 FIBCs constructed of nonconductive fabric and containing woven, grounded, conductive filaments can be considered to be conductive. One type of FIBC has conductive filaments spaced less than 20 mm apart, each of which is connected at least once to its neighbor, preferably at both ends. They are intended to be grounded. Another type has conductive filaments or threads that form an interconnecting grid of not more than 50 mm mesh size. They also are intended to be grounded.

16.6.6.3 The recommendations for conductive IBCs given in 10.1.4 also apply to conductive FIBCs. A grounding tab that is electrically connected to the conductive material or threads is provided and is intended to be connected to a ground point when the FIBC is filled or emptied. The resistance between the conductive elements in the FIBC and the grounding tabs should be less than 1.0×10^7 ohms.

16.6.6.4 For FIBCs constructed of multilayer materials, the resistance between the inside or outside surface of the FIBC and the grounding tabs should be less than 1.0×10^7 ohms. If the inside layer does not have a resistance to grounding tabs of less than 1.0×10^7 ohms, then the material should have a breakdown voltage of less than 6 kV. All layers of multilayer materials should remain in firm contact during filling and emptying operations.

16.6.6.5 Materials used to construct inner baffles, other than mesh or net baffles, should meet the requirements in 16.6.6.3 and 16.6.6.4.

16.6.7 Type D FIBCs.

16.6.7.1 Type D FIBCs are constructed from fabrics and/or threads with special electrostatic properties to control discharge incendivity and are intended for use without grounding in the presence of flammable vapors or gases with MIE of 0.14 mJ or greater and with combustible powders, including those with ignition energies of 3 mJ or less.

16.6.7.2 Before being used in hazardous environments, Type D FIBCs should be qualified as safe, that is, it should be demonstrated that no incendiary discharge can occur under normal operating conditions. IEC 61340-4-4, *Electrostat ICS — Part 4-4: Standard test methods for specific applications — Electrostatic classification of flexible intermediate bulk containers (FIBC)*, describes test procedures for ignition testing that can be used for this purpose.

16.6.7.3 If Type D FIBCs are made from materials that have an insulating layer (e.g., coating, film, or lamination) on the inside of the container, the materials should have a breakdown voltage of less than 6 kV. All layers of multilayer materials should remain in firm contact during filling and emptying operations.

16.6.8 Liners for Flexible Intermediate Bulk Containers. (Reserved)

Chapter 17 Web and Sheet Processes

17.1 General.

17.1.1 In web processes, such as printing, coating, spreading, and impregnating, static electricity is a frequent, annoying, and often expensive source of production problems. If flammable solvents are used in the process, static electric charges can constitute an ignition source.

17.1.2 In practice, paper or any other substrate charged with static electricity will attract or repel other objects. This phenomenon can cause difficulty in controlling the sheet or web, which is the continuous substrate that is being printed or coated. It can also cause problems with delivering and handling the printed product due to static attraction between the sheets or folded signatures. Static electric charges can transfer by induction or by contact with various objects (e.g., during handling of the paper or substrate by personnel). These static electric charges can accumulate on a person who is not adequately grounded.

Copyright 2014 National Fire Protection Association (NFPA). Licensed, by agreement, for individual use and download on October 4, 2014 to LEADER and READER for designated user PATTARAPORN SRITRAKOOL. No other reproduction or transmission in any form permitted without written permission of NFPA. For inquires or to report unauthorized use, contact licensing@nfpa.org.

17.2 Substrates.

17.2.1 Paper.

17.2.1.1 The characteristics of the surface of the paper have a great deal to do with the amount of static electric charge that is generated during processing. Generally, printing on paper causes fewer problems than printing on plastic substrates and other synthetic materials. Static electric charge accumulates on paper during the handling process. On presses and in other handling operations, static electric charge can be generated by belts driving the paper rolls, sliding of the web over idler rollers and angle bars, motion of the web through a nip, and motion of brushes and delivery belts in the folder.

17.2.1.2 In some operations, static electric charge is deliberately deposited on the web to improve certain operations, such as material deposition and sheet transfer. In gravure printing, for example, electrostatic assist is used to improve the transfer of ink. On high-speed offset and high-speed gravure presses, ribbon tacking is used to control the ribbons and signatures in the folder.

17.2.2 Plastics. Most plastic films are characterized by extremely high surface and bulk resistivities. This resistivity allows static electric charge to accumulate on the web after contact with machine parts, such as rollers and belts, with little dissipation occurring.

17.2.3 Fabrics and Nonwovens.

17.2.3.1 Fabrics are usually made of blends of natural fibers (usually hygroscopic and capable of relaxing a charge) and synthetic fibers (usually highly resistive and capable of holding a charge). The smaller the proportion of natural fibers used, the greater the incidence of static electric problems in subsequent operations. Fabrics are thin, like paper and plastic films, and accumulate static electricity in a similar manner.

17.2.3.2 Nonwovens often have a loft that gives them a three-dimensional structure. They are almost exclusively synthetic, so they tend to generate and hold substantial charges in the forming process. These charges can be more difficult to remove due to the depth of the loft. In a subsequent coating or saturating process, large amounts of charge can again be generated due to relative motion of the fibers and again the charge can be difficult to remove if the loft returns. The solvent-wet batt contains a relatively large volume of flammable vapor, and electrostatic discharge can cause ignition.

17.3 Inks and Coatings.

17.3.1 Inks used in letter presses and offset presses are typically Class IIIB liquids that have flash points above 93°C and present little fire or explosion hazard. However, inks used in silk screen, rotogravure, and flexograph printing are usually Class IB and Class IC liquids with flash points less than 38°C. Fires can occur in these inks due to the use of solvents with vapors that can be ignited by static electric discharge, as well as by other ignition sources.

17.3.2 The solutions and suspensions that are used to coat and saturate webs are diverse. While they are still wet, water-based coatings are generally conductive enough to dissipate any charge that is generated in the process, even though there might be minor concentrations of solvent present that can create an ignitible vapor layer on the web. When dry, however, these coatings are not always capable of dissipating the charge, but vapors are seldom left at this point.

17.3.3 Flammable solvent-based inks and coatings should be considered nonconductive and, therefore, incapable of dissipating a charge. Conductivity enhancers in the ink or coating cannot be relied on to assist dissipation of charge at high processing speeds. Measurement of coating solution conductivity can provide additional data to determine static generation and dissipation characteristics. Solvent-based coatings having conductivities less than 10^4 pS/m should be carefully evaluated for their ability to dissipate charge.

17.3.4 Black inks used in gravure printing are generally nonconductive. Where accumulations of black ink, particularly black ink used on uncoated papers, are washed or cleaned off the rubber impression rollers, the resin can be washed out of the ink buildup, leaving a residue of conductive carbon (i.e., the pigment). If this conductive residue is not thoroughly wiped off the rollers, sparking and arcing from the roller to the cylinder or other grounded press parts can occur.

17.4 Processes.

17.4.1 Printing Presses. All other factors being equal, printing presses that operate at higher speeds generate more static electricity. A rotogravure press, for example, can generate static electricity where the rubber roll presses the substrate against an engraved roll, which is wetted with the ink. Charge can be transferred from the engraved roll to the substrate. In a multicolored press, there is a similar arrangement for each color. The generation of charge is a function of the pressure between the rolls and the angle to the roll. The electrostatic assist (ESA) process, where used, deposits large amounts of charge onto the substrate. Note that ESA equipment must be suitable for Class I, Division 1, locations.

17.4.2 Coating. Coating of web materials is done using both flammable and nonflammable liquids on a wide variety of equipment. Significant charge can be generated where high forces between rollers and web are present, such as in gravure coating, and where web slippage is present due to tension difference across the coating roller. This can result in a static ignition hazard where flammable coatings are used. High charge can also accumulate on the rubber backup roller, and an electrostatic neutralizer might be needed if this poses an ignition hazard.

17.4.3 Saturating. Saturating is the process of immersion of a web in a liquid so that the liquid fills the pores in the web. The excess liquid is then squeezed or wiped from both sides of the web. Electrostatic charging during saturating operations is not usually a problem for most webs. Where the web is a nonwoven with substantial loft and the liquid is flammable and of low conductivity, a static electric hazard can be created.

17.4.4 Calendaring.

17.4.4.1 Calendaring is a process by which a substrate is squeezed at high pressure between rollers that are generally smooth. This process is used to create a dense product with a smooth surface, such as magazine cover stock. It is also used to mill and form webs from materials such as rubber and plastics. The intimate contact caused by the high pressures and the working of the materials between the nipped rollers creates charge on the web. Charging can be high enough to form corona discharge at the exit of the nip.

17.4.4.2 Because flammable solvents are not usually present, the effect of static electric charge is to cause operator shock and web-handling problems. Static neutralizers can effectively remove the charge.

Copyright 2014 National Fire Protection Association (NFPA). Licensed, by agreement, for individual use and download on October 4, 2014 to LEADER and READER for designated user PATTARAPORN SRITRAKOOL. No other reproduction or transmission in any form permitted without written permission of NFPA. For inquires or to report unauthorized use, contact licensing@nfpa.org.

17.4.5 Web Handling and Converting. The path of the web through processing machinery often is guided over many rollers. Movement of the web over the rollers produces static electric charge due to friction. A freely turning idler roller imparts little charge to the web. As the speed of the process increases above 60 m/min, air is drawn between the web and the roller, reducing the intimacy of contact and, thus, the rate of charge generation. If the roller does not turn freely, however, the web slips on the roller surface and can generate a large static electric charge. Periodic inspections and maintenance should be performed to ensure that the rollers are always free-turning.

17.4.6 Ribbon Tacking. On high-speed offset and gravure presses, high-voltage tacking is used to improve the delivery of signatures to the folder. These high-voltage devices should be suitable for Class II, Division 2, locations subject to accumulations of settled paper dust.

17.5 Control of Static Electricity in Web Processes.

17.5.1 Charging in Web-Handling Operations. Charging of webs can occur during unwinding, travel over rollers, pressing between rolls, or contact with coating rolls. Charging generally will increase with increasing web speed, tension, and roller wrap angle; a finer roll surface finish will enhance charging by increasing the area of roll-web contact. Web slippage over roll surfaces, caused by differential web speed or roll malfunction, can also significantly increase charging.

17.5.2 Potential Hazards of Charged Webs.

17.5.2.1 Static charges on a web can result in brush discharges from the web or spark discharges from ungrounded machine components or personnel that become inductively charged as a result of close proximity to the web. Such discharges can present shock hazards to operators or lead to fires in flammable coating operations and gravure printing.

17.5.2.2 For flammable operations, mechanical ventilation can be used to dilute vapors to a safe concentration well below the lower flammable limit. "Pumping" of vapors by the moving web at higher speeds can increase the volume over which such an atmosphere might be present. Vapors will always be within the flammable range close to the point of coating application; this volume should be minimized by capturing vapors as close to their source as possible. Equipment should be interlocked to shut down upon ventilation system failure or if vapor concentration becomes too high.

17.5.3 Static Charge Control.

17.5.3.1 Conductive Components. All conductive parts of the machine should be grounded in order to prevent them from becoming a potential spark source due to inductive charging; resistance to ground from fixed metallic objects should not exceed 10 ohms.

17.5.3.1.1* The resistance to ground of rollers should be determined upon initial installation and verified periodically thereafter. Resistance should not exceed 1 megohm. Since lubricant films can significantly increase resistance (because the bearings "float" on the lubricant), measurement should be performed during operation. The grounding of conductive rollers can also be compromised by non-conductive bearing lubricants or excessive bearing clearances, as well as build up of dirt or rust over time. Rolling or sliding contacts, such as conductive brushes, can be used to ground rollers in cases where an acceptably low resistance cannot be obtained.

17.5.3.2 Nonconductive Webs. Grounding of nonconductive webs is not possible, so other methods are necessary for static control. Existing processes should be audited to determine where significant charge is being generated. Measurements can be made with an electrostatic fieldmeter for web sections well away from grounded objects, such as rollers.

17.5.3.2.1 The first goal of a static-control program should be to minimize charge generation. Possible methods include minimizing web tension (but not to the extent that slippage occurs), ensuring that idler rollers have clean surfaces and are freely-rotating, minimizing web slippage, and increasing roller surface roughness. Nonconductive roller covers can acquire significant charge and should be replaced with static-dissipative covers where possible; otherwise, nonconductive covers, which will minimize contact charging with the web material, should be used.

17.5.3.2.2 Humidification is sometimes used to reduce static charge on nonconductive objects by providing a monolayer of moisture that decreases surface resistivity, enhancing charge dissipation. This is often not possible in web handling operations because the speed of the operation does not allow sufficient time for uptake of atmospheric moisture by the surface of the material. Also, many plastic web materials will not be significantly affected by moisture even with extended exposure time. For those reasons, humidification should not be relied upon as the sole method for static control in web handling processes, although in some cases higher humidity levels can be used to reduce static charge.

17.5.3.2.3 Ionization involves the use of devices that produce ions that neutralize surface charges and is the primary method used for static control on webs. Ionization devices might be needed at various points in a web handling system where charging occurs as shown in Figure 17.5.3.2.3. Such devices should extend across the full width of the web. Passive ionization involves the use of grounded tinsels, strings, needles, or brushes located a short distance (typically 5 to 25 mm) above the web. The electric field above the web is concentrated at the points of the tinsel, string, needle, or brush, resulting in breakdown and ionization of the surrounding air. Air ions having polarity opposite to charges on the web are attracted to the surface of the web, neutralizing the charge. Typically, this method can reduce surface potential to less than 5 kV. It is important that passive ionizing elements be positioned properly, be grounded, and have points that are kept clean and sharp. Performance should be verified by periodic static charge measurements on the web downstream of the ionizer.

17.5.3.2.4 Active ionization involves the use of electrically powered devices or radiological sources. AC ionizers are most commonly used and contain an array of high-voltage pointed electrodes that emit both positive and negative air ions. Neutralization is achieved by the attraction of air ions having opposite polarity to surface charges on the web. The effectiveness of ionizers decreases greatly with distance from the web; for this reason ionizers are typically located about 25–50 mm from the web. Forced air–assisted units (ionizing blowers) might be capable of neutralizing charge at somewhat greater distances. Ionizers should be located in a position so that ion flow will be toward the web rather than to nearby grounded surfaces and in accordance with manufacturers' recommendations. See Figure 17.5.3.2.3.

17.5.3.2.5 Performance of ionizers should be verified upon initial installation and periodically during use. Electrically

Copyright 2014 National Fire Protection Association (NFPA). Licensed, by agreement, for individual use and download on October 4, 2014 to LEADER and READER for designated user PATTARAPORN SRITRAKOOL. No other reproduction or transmission in any form permitted without written permission of NFPA. For inquires or to report unauthorized use, contact licensing@nfpa.org.

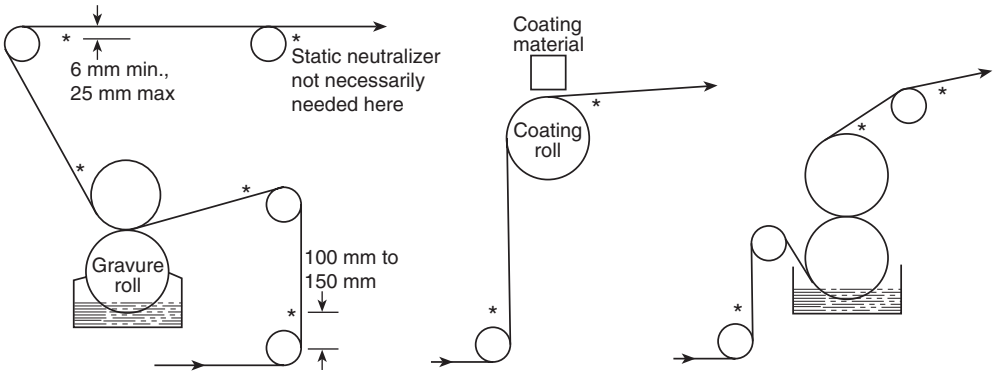

FIGURE 17.5.3.2.3 Typical Locations for Static Neutralizers.

powered ionizers used in flammable vapor environments must be listed for the hazardous (classified) location in which they are installed.

17.5.3.2.6 It is particularly important to ensure that web charge is reduced to a safe level as it enters flammable coating stations. Potentially incendive brush discharges can occur if web surface charge density exceeds 10 $\mu C/m^2$. To maintain a margin of safety, it is recommended that maximum indicated voltage above the web not exceed 5 kV as measured at a distance of 25 mm (field strength of 200 kV/m).

17.5.3.2.7 An ionizer should be located after the last contact point prior to entering the coater. Surface charge should be continuously monitored after the ionizer, and the process should be automatically shut down if safe electric field values are exceeded. An additional ionizer might also be required at the coater exit if charging occurs at that point.

17.5.3.3 Personnel. Personnel should be grounded, preferably by use of static-dissipative footwear and a static-dissipative flooring surface.

Chapter 18 Miscellaneous Applications

18.1 Spray Application Processes.

18.1.1 Processes that involve spray application of liquids or powders (e.g., paints, coatings, lubricants, and adhesives) can cause accumulation of static electric charges on the spray apparatus and on the surfaces of the objects being sprayed and other objects in the spray area. If the material sprayed is ignitible, static electric discharge can result in ignition.

18.1.2* Personnel involved in operating or servicing electrostatic spray application equipment should be trained in the operating procedures recommended by the manufacturer of the equipment and in the control of hazards associated with the materials being sprayed and their residues.

18.2 Belts and Conveyors.

18.2.1 General. Flat or V-shaped rubber or leather belts used for transmission of power and belts used for the transportation of solid materials can generate static electric charges that warrant corrective measures if a possibility exists that ignitible concentrations of flammable gases or vapors or combustible dusts or fibers might be present. The amount of charge generated increases as any of the following increases:

(1) Belt speed
(2) Belt tension
(3) Width of the contact area

18.2.2 Flat Belts.

18.2.2.1* Synthetic, rubber, or leather flat belts are usually good insulators, because they are dry when operated and because they operate at elevated temperatures due to friction. Generation of static electric charge occurs where the belt leaves the pulley and can occur with either conductive or nonconductive pulleys.

18.2.2.2* Accumulation of static electric charge on belts can be prevented by using belts made of conductive materials or by applying a conductive dressing to the belt.

18.2.2.2.1 If a dressing is used, it should be reapplied frequently, or the conductivity of the belt will diminish. Whether or not a dressing is used, belts should be kept free of accumulations.

18.2.2.3 An electrostatic neutralizer placed so that the points are close to the inside of the belt and a few centimeters away from the point where the belt leaves the pulley is also effective in draining away most of the charge. *(See 17.5.3.)*

18.2.3* V Belts.

18.2.3.1 V belts are not as susceptible to hazardous accumulations of static electric charge as are flat belts. Under certain conditions of temperature and humidity, however, a V belt can generate a significant charge.

18.2.3.2 Where ignitible mixtures of gases, vapors, dusts, or fibers are present, the preferred method to limit ignition by static electric discharge is to use a direct drive instead of a belt. If a V belt is necessary for other reasons, it should be protected in accordance with 18.2.2.2. (See CENELEC TR50504, *Electrostatics - Code of Practice for the Avoidance of Hazards Due to Static Electricity.*)

18.2.4 Conveyor Belts.

18.2.4.1 Belts used for the transport of solid materials usually move at speeds that are slow enough to prevent an accumulation of static electric charges. However, if the material being transported is very dry, or if the belt operates in a heated environment and at high speeds, significant charges can be generated.

Copyright 2014 National Fire Protection Association (NFPA). Licensed, by agreement, for individual use and download on October 4, 2014 to LEADER and READER for designated user PATTARAPORN SRITRAKOOL. No other reproduction or transmission in any form permitted without written permission of NFPA. For inquires or to report unauthorized use, contact licensing@nfpa.org.

18.2.4.2 Material that is spilled from the end of a conveyor belt into a hopper or chute can carry a significant charge. In such cases, the belt support and terminal pulleys should be electrically grounded or bonded to the hopper or chute. A passive or active neutralizer installed close to the end of the conveyor can also help reduce the charge. Conductive or antistatic belts cannot be expected to remove static from the conveyed product.

18.2.4.3 It should be noted that both conductive and nonconductive belts can generate and deposit charge on the material or objects being conveyed.

18.2.5 Pulleys and Shafts.

18.2.5.1 Metal pulleys can accumulate a charge equal and opposite to that carried by the belt that runs over them. The charge typically will pass to the supporting shaft and then through bearings to the equipment and to ground. Where nonconductive components isolate metal parts, separate bonding or grounding of those parts could be necessary.

18.2.5.2 Lubricated bearings are still sufficiently conductive to allow dissipation of a static electric charge from the shaft. However, the conductivity across bearings that operate at very high speed is not necessarily sufficient to prevent accumulation of charge where the rate of generation is also high. For that reason, shafts that rotate at high speed should meet the following criteria:

(1) They should be checked for accumulation of static electric charge.
(2) They should be bonded or grounded by means of a sliding metal contact to the housing, if necessary.

18.2.5.3 The effective resistance across a bearing while in operation can be measured with a common ohmmeter as follows:

(1) One of the probes should be placed on the grounded machine frame.
(2) The other probe should be allowed to rest against the rolling member.

18.2.5.3.1 A value of approximately 10^4 ohms is to be expected. If a value greater than 10^5 ohms is found, an auxiliary grounding brush or shoe might be needed to prevent changes with time that could allow the resistance to exceed 10^6 ohms. The grounding brush should be periodically checked and maintained.

18.2.5.3.2 Critical bearings without a brush should be measured periodically.

18.2.6 Maintenance of Belts and Conveyors. Belts and conveyors should be inspected frequently for slipping or jamming to lessen the chance of generation of static electricity.

18.2.6.1 Drive systems operating in hazardous environments should be designed to stall without slipping.

18.2.6.2 Lubricant does not prevent the removal of static electric charges. Therefore, all bearings should be properly lubricated. However, the flow of static electricity across the film of lubricant sometimes results in pitting of bearing surfaces. A conductive grounded brush running on the shaft or pulley prevents pitting of the bearings.

18.3 Explosives. Most explosives and materials used as solid propellants contain enough oxidizer to sustain an explosive reaction without any outside contribution. These materials might be sensitive to static electric discharge and can be extremely hazardous to handle if suitable precautions are not taken. In addition to the recommendations contained in this recommended practice, the following documents should be consulted for more specific information:

(1) NFPA 495, *Explosive Materials Code*
(2) NFPA 498, *Standard for Safe Havens and Interchange Lots for Vehicles Transporting Explosives*
(3) NFPA 1124, *Code for the Manufacture, Transportation, Storage, and Retail Sales of Fireworks and Pyrotechnic Articles*
(4) NFPA 1125, *Code for the Manufacture of Model Rocket and High Power Rocket Motors*
(5) IME Safety Library Publication No. 3, *Suggested Code of Regulations for the Manufacture, Transportation, Storage, Sale, Possession, and Use of Explosive Materials*
(6) IME Safety Library Publication No. 17, *Safety in the Transportation, Storage, Handling, and Use of Explosive Materials*
(7) U.S. Department of Defense Standard 4145.26M, *Contractors' Safety Manual for Ammunition and Explosives*
(8) U.S. Department of Defense Standard 6055.9, *Ammunition and Explosive Safety Standards*

18.4 Cathode Ray Tube Video Display Terminals.

18.4.1 A static electric charge is commonly present on the face of cathode ray tube (CRT) video display terminals, particularly on color monitors and color television screens. This charge is the direct result of the CRT's high-energy electron beam "writing" the image on the inside surface of the screen. The charge accumulates on the nonconductive surface of the screen and can reach energies capable of igniting a flammable atmosphere, if discharge occurs. Such an atmosphere can be created by wiping the screen of an operating or recently operated CRT with a cloth or tissue that is wet with a commercial cleaner that contains a flammable liquid such as isopropyl alcohol or by using a spray-on aerosol cleaner that uses a flammable gas propellant. The static electric charge can be removed from the screen of the CRT by accessories or by proper procedures. *(See 18.4.3.)* Other video display terminals, such as liquid crystal displays, gas plasma displays, and vacuum fluorescent displays, do not present similar static electric effects. That does not mean, however, that those displays are intrinsically safe for use in hazardous locations.

18.4.2 In an industrial environment that is classified as hazardous in accordance with Article 500 of *NFPA 70, National Electrical Code*, only engineering methods are acceptable for controlling the hazard.

18.4.2.1 Due to the high voltages present, the CRT should be enclosed in a purged or pressurized enclosure, as described in NFPA 496, *Standard for Purged and Pressurized Enclosures for Electrical Equipment.*

18.4.2.2 To protect against a static electric discharge from the screen's surface, the screen cannot be exposed to the surrounding environment but should be located behind a window in the enclosure.

18.4.3 In nonhazardous locations, a commercial static electric dissipating screen that overlays the CRT screen can be used to drain the static electric charge by means of a connection to ground. The ground connection from the overlay should be secure to prevent shock or an ignition-capable spark. One safe procedure for reducing the charge on the CRT screen is to wipe the screen with a water-wet cloth or tissue immediately before using any solvent-based cleaner. This action drains off the excess charge through the operator's body. Ideally, nonflammable or low-volatility cleaning agents should be used.

Copyright 2014 National Fire Protection Association (NFPA). Licensed, by agreement, for individual use and download on October 4, 2014 to LEADER and READER for designated user PATTARAPORN SRITRAKOOL. No other reproduction or transmission in any form permitted without written permission of NFPA. For inquires or to report unauthorized use, contact licensing@nfpa.org.

18.5 Plastic Sheets and Wraps.

18.5.1 Nonconductive plastic sheets and wraps, such as those used to wrap shipping pallets, present hazards similar to those of plastic bags. Such sheets and wraps can generate brush discharges from their surfaces following rubbing or separation of surfaces. Isolated wet patches can also create spark hazards.

18.5.2 An additional problem is charging of personnel as they handle plastic sheets and wrap. Plastic sheets and wrap should not be brought into areas that can contain ignitible atmospheres. Plastic pallet wrap can be removed outside the area and, if necessary, replaced by a suitable tarpaulin or other temporary cover. Antistatic wrap is available. Tear sheets (used outside many clean areas) can generate significant static electric charge when they are pulled from a dispenser, and precautions are similar to those for plastic sheets. *(Additional information on handling sheet materials is found in Chapter 17.)*

Annex A Explanatory Material

Annex A is not a part of the recommendations of this NFPA document but is included for informational purposes only. This annex contains explanatory material, numbered to correspond with the applicable text paragraphs.

A.1.1.2 See *NFPA 70, National Electrical Code*, for additional information on grounding to prevent shock hazards.

A.1.1.4 For information on the hazards of lightning, see NFPA 780, *Standard for the Installation of Lightning Protection Systems.*

A.1.1.5 For information on the hazards of stray electrical currents and induced radio frequency currents, see API RP 2003, *Protection Against Ignitions Arising Out of Static, Lightning, and Stray Currents.*

A.1.1.6 For information on the hazards of automotive and marine craft fueling, see NFPA 30A, *Code for Motor Fuel Dispensing Facilities and Repair Garages*, and NFPA 302, *Fire Protection Standard for Pleasure and Commercial Motor Craft.* For information on aircraft refueling, see NFPA 407, *Standard for Aircraft Fuel Servicing.*

A.1.1.7 For information on the hazards of static electricity in cleanrooms, see NFPA 318, *Standard for the Protection of Semiconductor Fabrication Facilities.*

A.3.2.1 Approved. The National Fire Protection Association does not approve, inspect, or certify any installations, procedures, equipment, or materials; nor does it approve or evaluate testing laboratories. In determining the acceptability of installations, procedures, equipment, or materials, the authority having jurisdiction may base acceptance on compliance with NFPA or other appropriate standards. In the absence of such standards, said authority may require evidence of proper installation, procedure, or use. The authority having jurisdiction may also refer to the listings or labeling practices of an organization that is concerned with product evaluations and is thus in a position to determine compliance with appropriate standards for the current production of listed items.

A.3.2.2 Authority Having Jurisdiction (AHJ). The phrase "authority having jurisdiction," or its acronym AHJ, is used in NFPA documents in a broad manner, since jurisdictions and approval agencies vary, as do their responsibilities. Where public safety is primary, the authority having jurisdiction may be a federal, state, local, or other regional department or individual such as a fire chief; fire marshal; chief of a fire prevention bureau, labor department, or health department; building official; electrical inspector; or others having statutory authority. For insurance purposes, an insurance inspection department, rating bureau, or other insurance company representative may be the authority having jurisdiction. In many circumstances, the property owner or his or her designated agent assumes the role of the authority having jurisdiction; at government installations, the commanding officer or departmental official may be the authority having jurisdiction.

A.3.2.3 Listed. The means for identifying listed equipment may vary for each organization concerned with product evaluation; some organizations do not recognize equipment as listed unless it is also labeled. The authority having jurisdiction should utilize the system employed by the listing organization to identify a listed product.

A.3.3 The terms and their definitions apply only within the scope of this recommended practice.

A.3.3.1.1 Antistatic Additive. Extrinsic and intrinsic antistatic additives can be distinguished according to the method of addition. Based on the permanence of their effect, antistatic treatments can be short-term or long-term.

A.3.3.5 Capacitance. Capacitance is the property of a system of conductors and nonconductors that permits the storage of electrically separated charges where potential differences exist between the conductors. For a given potential difference, the higher the capacitance, the greater is the amount of charge that can be stored. Quantitatively, it is the ratio of the charge on one of the conductors of a capacitor (there being an equal and opposite charge on the other conductor) to the potential difference between the conductors. The unit of capacitance is the farad. Because the farad is so large a quantity, capacitance *(see examples in Table A.3.3.5)* is usually reported in microfarads (μF) or picofarads (pF) in accordance with the following equation:

$$1 \text{ farad} = 10^{6} \ \mu\text{F} = 10^{12} \text{ pF}$$

Table A.3.3.5 Examples of Capacitance of Various Items

Item	Capacitance (pF)
Tank car	1000
Automobile	500
Person	100–300
Oil/solvent drum	10–100
Metal scoop	10–20
Needle electrode	1
Dust particle	10^{-7}

A.3.3.7.2 Triboelectric Charging. Triboelectric charging is the most familiar, yet least understood, charge generation mechanism. Triboelectric charging results from contact or friction between two unlike materials. The amount of charge generated in this way is dependent primarily on the nature of contact, the intrinsic electrical and static electric properties of the materials involved, and the prevailing conditions of humidity and temperature. An indication of the tendency of materials to accept static electric charge in this way is given by the triboelectric series. Recent studies indicate that the amount of charge transferred depends not only on the composition of

Copyright 2014 National Fire Protection Association (NFPA). Licensed, by agreement, for individual use and download on October 4, 2014 to LEADER and READER for designated user PATTARAPORN SRITRAKOOL. No other reproduction or transmission in any form permitted without written permission of NFPA. For inquires or to report unauthorized use, contact licensing@nfpa.org.

the materials but also on the capacitance of the junction. The following situations are examples of triboelectric charging:

(1) Pneumatic transport of powders along pipes
(2) High-speed webs of synthetic materials moving over rollers
(3) Charging of the bottom of shoes as a person walks across a carpet
(4) Extrusion of plastics or the ejection of plastic parts from a mold

Table A.3.3.7.2 illustrates typical electrostatic voltages observed as a result of triboelectric charging at two levels of relative humidity (RH).

Table A.3.3.7.2 Electrostatic Voltages Resulting from Triboelectric Charging at Two Levels of Relative Humidity (RH)

Situation	Electrostatic Voltages (kV)	
	RH 10%–20%	RH 65%–90%
Walking across a carpet	35	1.5
Walking across a vinyl floor	12	0.25
Working at a bench	6	0.1
Vinyl envelopes for work instructions	7	0.6
Poly bag picked up from bench	20	1.2
Work chair padded with polyurethane foam	18	1.5

A.3.3.12 Conductivity (σ). This property can be dramatically affected by the temperature and especially by the presence of moisture or antistatic additives. Conductors such as metals and aqueous solutions have a high conductivity (low resistivity) and lose charge quickly where grounded. Insulators have a high resistivity and lose charge very slowly, even where grounded. Conductors isolated from ground can store charge and can rise to fairly high potentials in many industrial situations, resulting in hazardous spark discharges.

The unit of conductivity is siemens per meter (S/m). (Note basis as reciprocal of resistivity, with units of ohm-meters.) Some authors express volume resistivity data in terms of ohm-meters (100 Ω-cm = 1 Ω-m).

Conductivity is not generally assigned to a gas. In gases, free electrons or ions can be formed or injected by external means. In the presence of an electric field, the ions migrate to electrodes or charged surfaces and constitute a current. Conductivity is rarely an intrinsic property of gas.

Another way to characterize conductivity is as the ratio of the electric current density to the electric field in a material.

A.3.3.15 Dielectric Constant. Typical dielectric constants and dielectric strengths are shown in Table A.3.3.15. A dielectric is not necessarily an insulator. For example, water, which has a high dielectric constant, is not a very good insulator. The measure of a good dielectric is its polarizability rather than its conductivity.

A.3.3.16 Dielectric Strength. The maximum dielectric field strength in atmospheric air is around 3×10^6 V/m. This value implies the existence of maximum value of surface charge density. Oscillating electric fields produce a significantly greater stress on materials than do time-independent fields. For that reason, insulation system based on dc ratings fail quickly where used with ac power units. See Table B.2 for typical data.

Table A.3.3.15 Dielectric Properties of Selected Materials

Material	Dielectric Constant	Dielectric Strength (V/m)
Bakelite	4.9	2.4×10^7
Cellulose acetate	3.8	1.0×10^7
Mica	5.4	1.0×10^8
Plexiglas, Lucite	3.4	4.0×10^7
Polystyrene	2.5	2.4×10^7
Porcelain	7	6.0×10^6
Titanium dioxide	90	6.0×10^6
Barium titanate	1200	5.0×10^6

A.3.3.17.1 Brush Discharge. For positive discharges, pre-onset or breakdown streamers are observed, and the maximum effective energy is a few millijoules. For negative discharges, the maximum effective energy is a few tenths of a millijoule. Brush discharges can ignite flammable gas and hybrid mixtures but not dust in air.

A.3.3.17.2 Bulking Brush Discharge. The maximum effective energy of a bulking brush discharge is believed to be 10 mJ to 25 mJ. It can ignite flammable gas, hybrid mixtures, and some fine dusts in air. Bulking brush discharge is also known as *cone discharge*.

A.3.3.17.3 Corona Discharge. Corona discharges can also result from similar sharp points on conductors at high voltage. Corona discharge might be a hazard with ignition-sensitive flammable gases such as acetylene, hydrogen, and carbon disulfide or other flammable gases in oxygen-enriched atmospheres.

A.3.3.17.4 Propagating Brush Discharge. The two-sided charge is typically formed by charged plastic coating on a metal substrate, although plastic pipe and plastic intermediate bulk containers can also form the required charged double layer. The effective energy can exceed 1000 mJ, causing both shock to personnel and ignition hazards for a wide variety of materials, including dusts in air.

A.3.3.18 Dissipative. Typically, a dissipative material is one having a surface resistivity between 10^5 and 10^9 ohms per square or a volume resistivity between 10^5 and 10^9 ohm-meters. Some applications might require different resistivities, while the intent is to dissipate charge.

A.3.3.19 Double Layer. In such a system, the movement of liquid causes a displacement of the mobile ions with respect to the fixed charges on the solid surface, creating a streaming current *(see 3.3.14.2)*.

A.3.3.27 Induction Bar. Ions (corona) are produced by the electrode if the charge on the object is great enough and if the object's placement is sufficiently close that corona onset is achieved.

A.3.3.36.2 Volume Resistivity. Typical test procedures include ASTM D 991, *Standard Test Method for Rubber Property-Volume — Resistivity of Electrically Conductive and Antistatic Products*, and ASTM D 257, *Standard Test Methods for DC Resistance or Conductance of Insulating Materials*.

Copyright 2014 National Fire Protection Association (NFPA). Licensed, by agreement, for individual use and download on October 4, 2014 to LEADER and READER for designated user PATTARAPORN SRITRAKOOL. No other reproduction or transmission in any form permitted without written permission of NFPA. For inquires or to report unauthorized use, contact licensing@nfpa.org.

A.3.3.41 Surface Streamer. The effective energy is unknown but is possibly as high as approximately 10 mJ. Surface streamers are also observed on tribocharged solid surfaces, such as between aircraft windshields and metal airframe, where puncturing does not occur.

A.3.3.42 Triboelectric Series. Where different materials are rubbed together, charge is transferred. Many researchers working in the field of triboelectricity have set up triboelectric series to show which combinations of materials would receive which charge. There is some agreement on the ranking of some materials, but most of the series are dissimilar, even where the same materials are used.

A.5.5.3.4 Minimum ignition energies can be determined for pure materials and their mixtures. The actual ignition energy could be higher than the MIE by an order of magnitude or more if the mixture varies significantly from the most easily ignited concentration. For hazard evaluation, the MIE should be considered the worst case.

A.7.2.2.1 The technique of inerting or enriching a potentially flammable atmosphere to mitigate the risk of a fire or explosion associated with a static electric discharge is well known. If inerting or enrichment is used to relax the guidelines established in this recommended practice for reducing static electric charge generation or accumulation or to eliminate spark promoters, the design, operation, and testing of the inerting or enrichment system must provide an equivalent level of risk mitigation. The design, operation, testing, and maintenance of such systems should address the following issues:

(1) Ensuring a reliable gas supply, including the following considerations:
   (a) Providing a backup gas supply
   (b) Anticipating credible high-demand scenarios to ensure that an adequate volume of gas is available to accommodate, for example, simultaneous start-up of multiple pieces of equipment or simultaneous rapid temperature change in multiple fixed-roof storage tanks due to a rain event, either of which can result in a demand for inert gas that is greater than the available supply
(2) System availability commensurate with the risk, including the following considerations:
   (a) Alarms for low gas pressure and high gas flow rate
   (b) Flow meters to monitor gas flow rate
   (c) Automatic controls, including interlocks to bring equipment to a safe state in the event of a failure or to initiate supply of the backup gas supply
   (d) Inspection, testing, and maintenance
(3) Written contingency plans to ensure the safety of the facility should failures occur or for planned shutdown of the inerting or enrichment system

A.8.2.2.2 See ASTM F 2413, *Standard Specification for Performance Requirements for Foot Protection.*

A.8.2.3 See Britton, *Avoiding Static Ignition Hazards in Chemical Operations*, for additional information.

A.8.2.4.2 See Britton, *Avoiding Static Ignition Hazards in Chemical Operations*, for additional information.

A.8.2.4.3 See NFPA 53, *Recommended Practice on Materials, Equipment, and Systems Used in Oxygen-Enriched Atmospheres.*

A.9.2.1.1 Class I flammable liquids, which have flash points of less than 38°C, can form ignitible vapor–air mixtures under most ambient conditions. Class II and Class III combustible liquids, which have flash points of 38°C or greater, typically require some degree of preheating before they evolve enough vapor to form an ignitible mixture. Certain liquids of low fire hazard, such as solvent formulations consisting of mostly water, might be classed as combustible liquids, yet they can generate ignitible vapor–air mixtures in closed containers at less than 38°C. Similarly, certain liquids that do not have a flash point could be capable of generating an ignitible vapor–air mixture as a result of degassing or slow decomposition, especially where the vapor space is small compared with the liquid volume. *(Also see Annex C.)*

A.9.2.1.2 The standard closed-cup flash point is generally higher than the true flash point, which is known as the lower temperature limit of flammability (LTLF). LTLF is the temperature at which the vapor at thermal equilibrium with the liquid achieves a concentration equal to the lower flammable limit (LFL). For single-component liquids, it is found that the standard flash point can be 4°C to 6°C higher than the true flash point (LTLF). For complex fuel mixtures, such as Jet Fuel A, the difference can be 10°C to 15°C.

A.9.2.2 Operating a process at less than the LFL is often safer than operating above the UFL, particularly for tanks and other large vessels. Even if liquid in a tank rapidly generates sufficient vapor for operation above the UFL, flammable mixtures can still be present at tank openings, such as sampling ports, and the flammable range could be traversed inside the tank during start-up or some other operating condition.

Often, the atmosphere in the vessel can be inerted, as described in NFPA 69, *Standard on Explosion Prevention Systems.* This technique reduces the oxygen concentration below that required to sustain combustion. Inerting might not be effective near tank openings, especially in cases where additions of solids can entrain air. Also for storage tanks, the inert gas supply should be capable of compensating for changes in temperature or in-breathing of air during tank emptying. *(Also see Annex D.)*

A.9.2.4 Preventing an ignitible atmosphere can be accomplished using any of the methods described in NFPA 69, *Standard on Explosion Prevention Systems.* Of those methods, the most common is to add a suitable inert gas, such as nitrogen, so that the resulting concentration of oxygen is not sufficient to support a flame. A safety factor is usually applied. For most flammable gases and vapors, inerting typically requires reducing the oxygen concentration to about 5 percent by volume.

A.9.3.1 The system of two layers having opposite net charge is referred to as an *electrical double layer.* Farther away from the contact surface is what is known as a *diffuse layer*, which has a charge of opposite polarity. Any process that shears the liquid, such as pipe flow, moves the diffuse layer downstream with the bulk of the liquid, while the bound layer charge relaxes to the wall, provided that the wall is grounded. This process, in effect, allows the diffuse layer to result in charge accumulation in the liquid. For conductive liquids such as water, the diffuse layer is only a few molecules thick. However, for nonconductive liquids, such as light petroleum distillates, the layer could be many millimeters thick. Ionic species present in liquids undergo charge separation at interfaces in a manner that results in one sign of charge being more strongly bound at the contacted surface than the other. This results in a bound layer of liquid close to the contact surface.

Copyright 2014 National Fire Protection Association (NFPA). Licensed, by agreement, for individual use and download on October 4, 2014 to LEADER and READER for designated user PATTARAPORN SRITRAKOOL. No other reproduction or transmission in any form permitted without written permission of NFPA. For inquires or to report unauthorized use, contact licensing@nfpa.org.

Where small droplets having dimensions smaller than the thickness of the double layer are formed, the formation of the droplet can pinch off a net charge. This can result in charged sprays and mists for both conductive and nonconductive liquids. The larger the area of the interface, the greater is the rate of charging. Examples of such processes are fine filtration; agitation of two-phase systems, such as water and oil; and suspension of powder in liquid.

The charges that are carried in the bulk of the flowing liquid create a current referred to as a *streaming current*. Although the charge is separated at the wall, flow mixes the charge into the bulk of the liquid, and a charge density, measured in coulombs per cubic meter, can be achieved. Streaming current, in coulombs per second or amperes, is equal to the volume flow rate, in cubic meters per second, multiplied by the liquid charge density, in coulombs per cubic meter.

A.9.3.2 See Annex E.

A.9.3.3.1 The mechanism of charge generation is highly complex. For flow of liquid in pipes, the charging current depends on the liquid's electrical conductivity and dielectric constant and its viscosity and flow characteristics, which involve factors such as flow velocity, pipe diameter, and surface roughness. For equal flow characteristics, electrical conductivity is the dominant factor. This is most pronounced for low-conductivity liquids, due to trace contaminants.

Trace contaminants have a negligible effect on the liquid's dielectric constant and viscosity but have a dominant effect on conductivity. Conductive liquids are much less affected by trace contaminants. In many systems, such as long pipes, the charge density reaches a steady state at which the rate of charge generation is balanced by the rate of charge relaxation back to ground. *(Also see Annex E.)*

A.10.1 See Britton, *Avoiding Static Ignition Hazards in Chemical Operations*, for additional information.

Various theoretical and empirical models have been derived expressing either charge density or charging current in terms of flow characteristics, such as pipe diameter and flow velocity. Liquid dielectric and physical properties appear in more complex models. For turbulent flow of a nonconductive liquid through a pipe under conditions where the residence time is long compared with the relaxation time, the streaming current, I_s, can be expressed by the following equation:

$$I_s = N(v^x)(d^y)$$

where:
I_s = streaming current (amperes)
N = constant (characterizing flow conditions, as explained in the following text)
v = flow velocity (meters per second)
x = approximately 2
d = diameter of conduit (meters)
y = approximately 2

Various values for the constants can be found in the literature. The constant, N, has been reported to range from 3.75×10^{-6} C-sec/m^4 to 25×10^{-6} C-sec/m^4. The lower value corresponds to turbulent flow through a long, smooth pipe, while the higher value corresponds to turbulent flow through spiral-wound composite hose. An order of magnitude value for N is 1×10^{-5} C-sec/m^4. While more recent studies suggest that y is equal to 1, it has been most commonly reported that both x and y are approximately equal to 2, so that the charging current is roughly proportional to the square of $(v \times d)$. An important outcome of the studies is that $(v \times d)$ can be used as a means of characterizing the charging current in pipe flow and as a basis for setting flow limits where filling tanks. *(See Sections 12.1 and 12.2.)*

A.10.2 All-plastic nonconductive pipe should not be used for handling nonconductive or semiconductive liquids except where it can be shown that the advantages outweigh any risks associated with external static electric discharge or leaks from pinholes or where tests have demonstrated that the phenomena will not occur. Grounded, plastic-lined metal pipe does not pose either of those risks directly, but tolerance for liner pinholes should be considered. For example, if the liquid is corrosive to metal piping, gradual loss of metal because of pinholes could lead to unacceptable product contamination and eventual loss of containment. Conversely, minor pinhole damage might be acceptable, provided that the liner is intended only to minimize product discoloration caused by rust and scale.

Where nonconductive and partly conductive liquids need to be transferred through plastic piping systems, mitigating strategies include the following:

(1) Reducing the rate of charging by decreasing flow velocity
(2) Eliminating or relocating microfilters further upstream
(3) Reducing wall resistivity, possibly to less than 10^8 ohm-m
(4) Increasing the breakdown strength of the pipe wall by increasing the thickness or changing the material of construction
(5) Incorporating an external grounded conductive layer on the piping

Combinations of these strategies can be considered. For example, in many cases, the presence of an external conductive layer on a plastic pipe will not by itself eliminate puncturing of the internal plastic wall, and if the layer does not provide containment, it will not prevent external leakage.

A.10.3 For all-metal conductive hose, the resistance to ground from any point normally should be 10 ohms or less. For conductive hose that contain a continuous bonding element, such as wire or braid, the resistance to ground from any metal connector normally should be 1000 ohms per meter or less, with the same exception being applicable. Resistance to ground through semiconductive hose with a current-limiting design that eliminates a low-resistance bonding element and resistance to ground through insulating flanges should be between 10^3 ohms/m and 10^5 ohms/m. In either case, the total resistance to ground from a metal hose connector should not exceed 10^6 ohms.

While a resistance to ground of less than 10^6 ohms will prevent accumulation of static electric charge in most cases, if periodic testing reveals a significant increase in the as-installed resistance, that increase could be the result of corrosion or other damage, which could lead to sudden loss of continuity. The hose, insulating flange, or both should be inspected to determine the need for replacement.

Where conductive hose has double spirals, one for bonding and the other for mechanical strength, continuity between the end connectors confirms the continuity of only one spiral. A fire was reported during draining of toluene from a tank vehicle through such a hose. It was found that the inner spiral not only was broken but was not designed to be bonded to the end connectors. For handling nonconductive liquids, one option is to use a hose with a semiconductive or conductive liner, so that a broken inner spiral cannot become isolated from

Copyright 2014 National Fire Protection Association (NFPA). Licensed, by agreement, for individual use and download on October 4, 2014 to LEADER and READER for designated user PATTARAPORN SRITRAKOOL. No other reproduction or transmission in any form permitted without written permission of NFPA. For inquires or to report unauthorized use, contact licensing@nfpa.org.

ground and form a spark gap. Ideally, the inner spiral should be separately bonded to the end connectors.

It is especially important to ensure continuity with end connectors (or nozzles) where a hose is used in an ignitible atmosphere. In general, it is safer to use a properly designed fixed fill system, such as a dip pipe arrangement, for filling tank vehicles, rather than to use a hose.

Where used in flammable atmospheres, such as inside tanks, utility hose should be conductive or semiconductive. In particular, all metal connectors and nozzles should be grounded. Ungrounded hose connectors on nonconductive hose can become charged by a variety of means, such as by the insertion of a nitrogen hose into a tank containing charged liquid or mist, by rubbing, or by streaming currents generated by the flow of steam condensate. While clean and dry gases do not generate charge, a nonconductive hose will become highly charged by the flow of steam.

A.11.1.5 Removal of linings that are wet with flammable material pose ignition hazards during handling and storage. Conductive and static dissipative linings should be handled by a grounded person and stored outside the operating area in a well-ventilated location. Nonconductive linings pose special hazards if they are stacked and then unstacked, creating static via rubbing. A hazard review should be considered to determine the safest way to handle and store removable linings.

A.11.2 See NFPA 326, *Standard for the Safeguarding of Tanks and Containers for Entry, Cleaning, or Repair*.

A.12.1.1 For background information regarding fill rates and flow velocities, see Britton and Walmsley, "Static Electricity — New Guidance for Storage Tank Loading Rates," and Britton and Smith, "Static Hazards of the VAST." For guidance about inerting of tanks and about "padding" of tanks with fuel gas, see Chapter 7 of NFPA 69, *Standard on Explosion Prevention Systems*.

A.12.1.4.3 Floating-roof storage tanks are inherently safe, provided that the floating roof is bonded to the tank shell. Bonding typically is achieved by shunts between the floating roof or cover and the wall of the tank. The shunts are installed for lightning protection, but they also provide protection from static electric charges that could be generated. If the floating roof is landed on its supports, charge accumulation in the surface of the liquid can occur, and the precautions for a fixed-roof tank should be followed. If an internal floating-roof tank is not adequately ventilated, flammable vapor can accumulate between the floating roof and the fixed roof.

A.12.3 See API 2219, *Safe Operation of Vacuum Trucks in the Petroleum Service*, for general recommendations.

A.13.2 See NFPA 69, *Standard on Explosion Prevention Systems*, for additional information.

A.14.4 If used for flammable liquid spills, which could involve a second phase such as spill control granules or debris, wet-dry vacuum cleaners pose a number of problems, including the following:

(1) Generation of static electricity
(2) Electrical classification of powered equipment
(3) Chemical compatibility
(4) Industrial hygiene (relative to the exhaust from the vacuum cleaner)

Commercial machines for Class I, Group D, and Class II, Group E through Group G atmospheres are typically air-operated via a venturi, so they contain no electrical power. Air supply hose and liquid recovery hose should be conductive and constructed of semiconductive fabric. Filters are also semiconductive or conductive. The design is such that all parts are continuously bonded and grounded. Normally, ground continuity at prescribed checkpoints is established before each use. Floats or similar mechanisms are employed to shut off suction once the recovery tank has reached capacity level. Additional precautions might be needed to avoid overflow via siphoning (if the recovery hose is completely submerged in liquid) or where defoaming agents are not used. For flammable liquid spills in particular, measures should be taken, including training and personnel grounding, to ensure personnel are not a source of ignition.

A.15.2.4 The minimum ignition energy (MIE) of a dust cloud is determined using a sample that is representative of the dust in a process. The equipment and procedures used over the years have been many and varied. Therefore, MIE data might not be comparable from one data set to the next. Furthermore, the conditions under which laboratory data are acquired can be different from those of the process being examined. For these reasons, comparisons of MIE data are sometimes qualitative rather than quantitative. Nevertheless, comparisons can be quite useful.

The MIE of a dust decreases with decreasing particle size and with increasing temperature. The MIE could increase with increasing moisture content of the dust. The MIE of a dust varies little with the humidity of the supporting atmosphere, excluding problems with hygroscopic dusts. The factors that affect the MIE should be considered in a hazards analysis of a process.

A.15.6 See Britton, *Avoiding Static Ignition Hazards in Chemical Operations*, for additional information.

A.15.8 Some flexible hose can be cut to length and put into service by simply slipping them over a pipe with a hose clamp. It is important that the spiral wires be in good metal-to-metal contact with the pipes to maintain a proper ground of the spiral. This contact can be achieved by stripping the spiral and bending it under the hose next to the pipe and under the clamp. In cases where hose with metal spirals are connected to plastic pipes, the spirals should be independently grounded.

The reason for discouraging the use of hose with more than one spiral is that if one of the spiral wires is broken in such a way that it is disconnected from ground, it can become a source of spark gap ignition.

A.15.11 See Britton, *Avoiding Static Ignition Hazards in Chemical Operations*, for additional information.

A.15.12 See Britton, *Avoiding Static Ignition Hazards in Chemical Operations*, for additional information.

A.17.5.3.1.1 It is possible that grounding of conductive rollers could be compromised by nonconductive bearing lubricants or excessive bearing clearances, as well as buildup of dirt or rust over time. In such cases, rolling or sliding contacts, such as conductive brushes, can be used to ground rollers in cases where an acceptably low resistance cannot be obtained.

A.18.1.2 See NFPA 33, *Standard for Spray Application Using Flammable or Combustible Materials*, for further information.

A.18.2.2.1 Investigations into the static electric hazard in grain elevators have shown that danger exists where the voltage reaches 30,000 volts on the belt. These studies also show that low relative humidity is an important factor in that it allows voltages to increase rapidly at temperatures below freezing.

Copyright 2014 National Fire Protection Association (NFPA). Licensed, by agreement, for individual use and download on October 4, 2014 to LEADER and READER for designated user PATTARAPORN SRITRAKOOL. No other reproduction or transmission in any form permitted without written permission of NFPA. For inquires or to report unauthorized use, contact licensing@nfpa.org.

A.18.2.2.2 The surface resistivity of a grain conveyor belt affects its ability to accumulate a charge. Tests have shown that belts with a resistance of 10^6 ohms to 10^8 ohms are conductive enough to prevent significant accumulation of charge. According to the CENELEC draft standard *Safety of Machinery — Electrotechnical Aspects*, a belt is considered to be sufficiently conductive if the surface resistance is less than 3×10^8 ohms.

A.18.2.3 According to the CENELEC draft standard *Safety of Machinery — Electrotechnical Aspects*, V belts and similar transmission belts are considered to be sufficiently conductive if the following criterion is met:

$$R \times B < 10^5 \text{ ohm-m}$$

where:

R = electrical resistance, measured at the inner side of the mounted transmission belt between an electrode halfway between the two pulleys and ground (ohms)

B = width of a flat belt or twice the depth of the side face of a V belt (meters)

For belts constructed of different materials, a belt is considered to be sufficiently conductive if the resistance across the belt does not exceed 10^9 ohms, measured at 23°C and 50 percent relative humidity.

Annex B Physical Characteristics of Materials

This annex is not a part of the recommendations of this NFPA document but is included for informational purposes only.

B.1 Combustibility Parameters of Gases and Vapors. Table B.1 lists typical gases and vapors and the lowest value of their minimum ignition energies (MIEs) in millijoules; the stoichiometric composition, expressed as percent by volume in air (or other oxidant); and the flammable limits, also expressed as percent by volume in air (or other oxidant).

B.2 Static Electric Characteristics of Liquids. Table B.2 lists typical flammable and combustible liquids and their conductivities, dielectric constants, and relaxation time constants.

Table B.1 Combustibility Parameters of Gases and Vapors

Gas or Vapor[a]	Lowest MIE[b] (mJ)	Stoichiometric Mixture (% by volume)	Flammable Limits (% by volume)
Acetaldehyde	0.13[c]	7.73	4.0–57.0
Acetone	0.19[c]	4.97	2.6–12.8
Acetone in oxygen	0.0024	—	—
Acetylene	0.017 @ 8.5%	7.72	2.5–100
Acetylene in oxygen	0.0002 @ 40%	28.6	2.5–100
Acrolein	0.13	5.64	2.8–31
Acrylonitrile	0.16 @ 9.0%	5.29	3.0–17.0
Allyl chloride	0.77[d]	—	2.9–11.1
Ammonia	680	21.8	15–28
Benzene	0.2 @ 4.7%	2.72	1.3–8.0
1,3-Butadiene	0.13 @ 5.2%	3.67	2.0–12
Butane	0.25 @ 4.7%	3.12	1.6–8.4
n-Butyl chloride	1.24[d]	3.37	1.8–10.1
Carbon disulfide	0.009 @ 7.8%	6.53	1.0–50.0
Cyclohexane	0.22 @ 3.8%	2.27	1.3–7.8
Cyclopentadiene	0.17[c]	—	—
Cyclopentane	0.24[c]	2.71	1.5–ND
Cyclopropane	0.17 @ 6.3%	4.44	2.4–10.4
Dichlorosilane	0.015	17.36	4.7–96
Diethyl ether	0.19 @ 5.1%	3.37	1.85–36.5
Diethyl ether in oxygen	0.0012	—	2.0–82
Di-isobutylene	0.23[c]	—	1.1–6.0
Di-isopropyl ether	0.23[c]	—	1.4–7.9
Dimethoxymethane	0.12[c]	—	2.2–13.8
2,2-Dimethylbutane	0.25 @ 3.4%	2.16	1.2–7.0
Dimethyl ether	0.15[c]	—	3.4–27.0
2,2-Dimethyl propane	1.57	—	1.4–7.5
Dimethyl sulfide	0.48[d]	—	2.2–19.7
Di-t-butyl peroxide	0.1	—	—
Ethane	0.23 @ 6.5%	5.64	3.0–12.5
Ethane in oxygen	0.0019	—	3.0–66
Ethanol	0.23[c]	6.53	3.3–19
Ethyl acetate	0.23[c]	4.02	2.0–11.5
Ethylamine	0.19[c]	5.28	3.5–14.0

Copyright 2014 National Fire Protection Association (NFPA). Licensed, by agreement, for individual use and download on October 4, 2014 to LEADER and READER for designated user PATTARAPORN SRITRAKOOL. No other reproduction or transmission in any form permitted without written permission of NFPA. For inquires or to report unauthorized use, contact licensing@nfpa.org.

Table B.1 *Continued*

Gas or Vapor[a]	Lowest MIE[b] (mJ)	Stoichiometric Mixture (% by volume)	Flammable Limits (% by volume)
Ethylene	0.084	—	2.7–36.0
Ethylene in oxygen	0.0009	—	3.0–80
Ethyleneimine	0.11[c]	—	3.6–46
Ethylene oxide	0.065 @ 10.8%	7.72	3.0–100
Furan	0.14[c]	4.44	2.3–14.3
Heptane	0.24 @ 3.4%	1.87	1.05–6.7
Hexane	0.24 @ 3.8%	2.16	1.1–7.5
Hydrogen	0.016 @ 28%	29.5	4.0–75
Hydrogen in oxygen	0.0012	—	4.0–94
Hydrogen sulfide	0.068	—	4.0–44
Iso-octane	0.25	—	0.95–6.0
Isopentane	0.21 @ 3.8%	—	1.4–7.6
Isopropyl alcohol	0.21	4.44	2.0–12.7
Isopropyl chloride	1.08[d]	—	2.8–10.7
Isopropylamine	0.23[c]	—	—
Isopropyl mercaptan	0.53	—	—
Methane	0.21 @ 8.5%	9.47	5.0–15.0
Methane in oxygen	0.0027	—	5.1–61
Methanol	0.14 @ 14.7%	12.24	6.0–36.0
Methylacetylene	0.11 @ 6.5%	—	1.7–ND
Methyl acrylate	0.18[c]	—	2.8–25
Methylene chloride	>1000	—	14–22
Methyl butane	<0.25	—	1.4–7.6
Methyl cyclohexane	0.27 @ 3.5%	—	1.2–6.7
Methyl ethyl ketone	0.21[c]	3.66	2.0–12.0
Methyl formate	0.13[c]	—	4.5–23
N-Pentane	0.24	2.55	1.5–7.8
2-Pentane	0.18 @ 4.4%	—	—
Propane	0.24	4.02	2.1–9.5
Propane in oxygen	0.0021	—	—
Propionaldehyde	0.18[c]	—	2.6–17
n-Propyl chloride	1.08[d]	—	2.6–11.1
Propylene	0.18[c]	—	2.0–11.0
Propylene oxide	0.13 @ 7.5%	—	2.3–36.0
Styrene	0.18[c]	2.05	0.9–6.8
Tetrahydrofuran	0.19[c]	—	2.0–11.8
Tetrahydropyran	0.22 @ 4.7%	—	—
Thiophene	0.39[d]	—	—
Toluene	0.24 @ 4.1%	2.27	1.27–7.0
Trichlorosilane	0.017	—	7.0–83
Triethylamine	0.22[c]	2.10	—
2,2,3-Trimethyl butane	1.0	—	—
Vinyl acetate	0.16[c]	4.45	2.6–13.4
Vinyl acetylene	0.082	—	1.7–100
Xylene	0.2	1.96	1.0–7.0

ND: Not determined.

[a]In air at standard temperature and pressure, unless otherwise noted.

[b]Lowest MIE = lowest minimum ignition energy measured at optimum concentration.

[c]Lowest MIE calculated using heat of oxidation method.

[d]Lowest MIE is too high, measured at stoichiometric concentration, but is not amenable to calculation using heat of oxidation method.

Source: Britton, L. G., "Using Heats of Oxidation to Evaluate Flammability Hazards."

Copyright 2014 National Fire Protection Association (NFPA). Licensed, by agreement, for individual use and download on October 4, 2014 to LEADER and READER for designated user PATTARAPORN SRITRAKOOL. No other reproduction or transmission in any form permitted without written permission of NFPA. For inquires or to report unauthorized use, contact licensing@nfpa.org.

Table B.2 Static Electric Characteristics of Liquids

Liquid	Conductivity (pS/m)	Dielectric Constant	Relaxation Time Constant (sec)
Conductive Liquids: Conductivity > 10^4 pS/m			
Acetaldehyde (15°C)	1.7×10^8	21.1	1.1×10^{-6}
Acetamide	8.8×10^7	59	5.9×10^{-6}
Acetic acid (0°C)	5×10^5	6.15	1.1×10^{-4}
Acetic acid (25°C)	1.12×10^6	6.15	4.9×10^{-5}
Acetic anhydride (25°C)	4.8×10^7	NA	NA
Acetone (25°C)	6×10^6	20.7	3×10^{-5}
Acetonitrile (20°C)	7×10^8	37.5	5×10^{-7}
Acetophenone (25°C)	3.1×10^5	17.39	5.0×10^{-4}
Acetyl bromide (25°C)	2.4×10^8	NA	NA
Acetyl chloride (25°C)	4×10^7	NA	NA
Acrolein	1.55×10^7	NA	NA
Acrylonitrile	7×10^5	38	4.8×10^{-4}
Allyl alcohol (25°C)	7×10^8	NA	NA
Aminoethyl-ethanolamine	$>1 \times 10^6$	NA	NA
n-Aminoethyl piperazine	2.4×10^5	NA	NA
Ammonia (–79°C)	1.3×10^7	NA	NA
Iso-amyl alcohol	1.4×10^5	14.7	9.3×10^{-4}
Aniline (25°C)	2.4×10^6	6.89	2.5×10^{-5}
Anthracene (25°C)	3×10^4	NA	NA
Arsenic tribromide (25°C)	1.5×10^8	NA	NA
Arsenic trichloride (25°C)	1.2×10^8	NA	NA
Benzaldehyde (25°C)	1.5×10^7	NA	NA
Benzoic acid (125°C)	3×10^5	NA	NA
Benzonitrile (25°C)	5×10^6	25.2	4.5×10^{-5}
Benzyl alcohol (25°C)	1.8×10^8	NA	NA
Benzylamine (25°C)	$<1.7 \times 10^6$	NA	NA
Benzyl benzoate (25°C)	$<1 \times 10^5$	NA	NA
Benzyl cyanide	$<5 \times 10^6$	18.7	$>3.3 \times 10^{-5}$
Biphenyl (liquid above 120°C)	$>1 \times 10^4$	NA	NA
Bromoform (25°C)	$<2 \times 10^6$	4.39	$>1.9 \times 10^{-5}$
Isobutyl alcohol	9.12×10^5	17.51	1.7×10^{-4}
sec-Butyl alcohol	$<1 \times 10^7$	16.56	$>1.5 \times 10^{-5}$
t-Butyl alcohol	2.66×10^6	12.47	4.2×10^{-5}
Isobutyl chloride	1×10^4	6.49	5.7×10^{-3}
sec-Butyl chloride	1×10^4	7.09	6.3×10^{-3}
Capronitrile (25°C)	3.7×10^8	NA	NA
m-Chloroaniline (25°C)	5×10^6	NA	NA
Chlorohydrin (25°C)	5×10^7	NA	NA
m-Cresol	1.397×10^6	11.8	7.5×10^{-5}
o-Cresol	1.27×10^5	11.5	8.0×10^{-4}
p-Cresol	1.378×10^6	9.91	6.4×10^{-5}
Cyanogen	$<7 \times 10^5$	NA	NA
Cyclohexanone	5×10^5	NA	NA
Cymene (25°C)	$<2 \times 10^6$	NA	NA
Dibutyl-o-phthalate	1.8×10^5	6.436	3.2×10^{-4}
Dichloroacetic acid (25°C)	7×10^6	NA	NA
cis-Dichloroethylene	8.5×10^5	9.20	9.6×10^{-5}
Dichlorohydrin (25°C)	1.2×10^9	NA	NA
Diethylamine (–33.5°C)	2.2×10^5	NA	NA
Diethyl carbonate (25°C)	1.7×10^6	2.82	1.5×10^{-5}
Diethylene glycol	5.86×10^7	31.69	4.8×10^{-6}
Diethylenetriamine	$>1 \times 10^6$	NA	NA
Diethyl oxalate (25°C)	7.6×10^7	NA	NA

Copyright 2014 National Fire Protection Association (NFPA). Licensed, by agreement, for individual use and download on October 4, 2014 to LEADER and READER for designated user PATTARAPORN SRITRAKOOL. No other reproduction or transmission in any form permitted without written permission of NFPA. For inquires or to report unauthorized use, contact licensing@nfpa.org.

Table B.2 *Continued*

Liquid	Conductivity (pS/m)	Dielectric Constant	Relaxation Time Constant (sec)
Diethyl sulfate (25°C)	2.6×10^{7}	NA	NA
Dimethyl acetamide	1.1×10^{7}	NA	NA
Dimethyl formamide	6×10^{6}	36.71	5.4×10^{-5}
Dimethyl sulfate (0°C)	1.6×10^{7}	NA	NA
Dimethyl sulfoxide	2×10^{5}	46.68	2.1×10^{-3}
Diphenyl oxide	$<1.7 \times 10^{6}$	4.22	$>2.2 \times 10^{-5}$
Epichlorohydrin (25°C)	3.4×10^{6}	22.6	5.9×10^{-5}
Ethanolamine	1.1×10^{9}	37.72	3.0×10^{-7}
Ethylacetate (25°C)	4.6×10^{4}	6.02	1.2×10^{-3}
Ethyl acetoacetate (25°C)	4×10^{6}	15.7	3.5×10^{-5}
Ethyl acrylate	3.35×10^{5}	NA	NA
Ethyl alcohol (25°C)	1.35×10^{5}	24.55	1.6×10^{-3}
Ethylamine (0°C)	4×10^{7}	NA	NA
Ethyl benzoate (25°C)	$<1 \times 10^{5}$	6.02	$>5.3 \times 10^{-4}$
Ethyl bromide (25°C)	$<2 \times 10^{6}$	9.39	$>4.2 \times 10^{-5}$
Ethyl chloride	$<3 \times 10^{5}$	9.45	$>2.8 \times 10^{-4}$
Ethyl cyanoacetate	6.9×10^{7}	26.7	3.4×10^{-6}
Ethylene carbonate	$<1 \times 10^{7}$	89.6	$>7.9 \times 10^{-5}$
Ethylenediamine	9×10^{6}	12.9	1.3×10^{-5}
Ethylene dibromide (25°C)	$<2 \times 10^{4}$	4.78	$>2.1 \times 10^{-3}$
Ethylene glycol	1.16×10^{8}	37.7	2.9×10^{-6}
Ethylene glycol monobutyl ether	4.32×10^{7}	9.30	1.9×10^{-6}
Ethylene glycol monoethyl ether	9.3×10^{6}	29.6	2.8×10^{-5}
Ethylene glycol monomethyl ether	1.09×10^{8}	16.93	1.4×10^{-6}
Ethyleneimene	8×10^{8}	18.3	2.0×10^{-7}
Ethylene oxide	4×10^{6}	12.7	2.8×10^{-5}
Ethyl formate	1.45×10^{5}	7.16	4.4×10^{-4}
Ethylidene chloride	2.0×10^{5}	10.0	4.4×10^{-4}
Ethyl isothiocyanate (25°C)	1.26×10^{7}	NA	NA
Ethyl lactate	1.0×10^{8}	13.1	1.2×10^{-6}
Ethyl nitrate (25°C)	5.3×10^{7}	NA	NA
Ethyl oxalate	7.12×10^{7}	NA	NA
Ethyl propionate	8.33×10^{10}	5.65	6×10^{-10}
Ethyl thiocyanate (25°C)	1.2×10^{8}	NA	NA
Eugenol (25°C)	$<1.7 \times 10^{6}$	NA	NA
Formamide (25°C)	4×10^{8}	111.0	2×10^{-6}
Formic acid (25°C)	6.4×10^{9}	58.5	8.1×10^{-8}
Furfural (25°C)	1.5×10^{8}	NA	NA
Glycerol (25°C)	6.4×10^{6}	42.5	5.9×10^{-5}
Guaiacol (25°C)	2.8×10^{7}	NA	NA
Hydrogen bromide (–80°C)	8×10^{5}	NA	NA
Hydrogen chloride (–96°C)	1×10^{6}	NA	NA
Hydrogen cyanide (0°C)	3.3×10^{8}	NA	NA
Hydrogen iodide (at boiling point)	2×10^{7}	NA	NA
Iodine (110°C)	1.3×10^{4}	NA	NA
Mercury (0°C)	1.063×10^{18}	NA	NA
Methoxy triglycol	$>1 \times 10^{6}$	NA	NA
Methyl acetamide	2×10^{7}	191.3	8.5×10^{-5}
Methyl acetate (25°C)	3.4×10^{8}	6.68	1.7×10^{-7}
Methyl alcohol (18°C)	4.4×10^{7}	32.70	6.6×10^{-6}
Methyl cyanoacetate	4.49×10^{7}	29.30	5.8×10^{-6}
Methyl ethyl ketone (25°C)	1×10^{7}	18.51	1.6×10^{-5}
Methyl formamide	8×10^{7}	182.4	2.0×10^{-5}

(continues)

Copyright 2014 National Fire Protection Association (NFPA). Licensed, by agreement, for individual use and download on October 4, 2014 to LEADER and READER for designated user PATTARAPORN SRITRAKOOL. No other reproduction or transmission in any form permitted without written permission of NFPA. For inquires or to report unauthorized use, contact licensing@nfpa.org.

Table B.2 *Continued*

Liquid	Conductivity (pS/m)	Dielectric Constant	Relaxation Time Constant (sec)
Methyl formate	1.92×10^{8}	8.5	3.9×10^{-7}
Methyl iodide (25°C)	$<2 \times 10^{6}$	NA	NA
Methyl isobutyl ketone	$<5.2 \times 10^{6}$	13.11	$>2.2 \times 10^{-5}$
Methyl nitrate (25°C)	4.5×10^{8}	NA	NA
n-Methyl-2-pyrolidone	2×10^{6}	32.0	1.4×10^{-4}
Methyl thiocyanate (25°C)	1.5×10^{8}	NA	NA
Naphthalene (82°C)	4×10^{4}	NA	NA
Nitrobenzene (0°C)	5×10^{5}	34.82	6.2×10^{-4}
Nitroethane	5×10^{7}	28.06	5.0×10^{-6}
Nitromethane (18°C)	6×10^{7}	35.87	5.3×10^{-6}
1-Nitropropane	3.3×10^{7}	23.24	6.2×10^{-6}
2-Nitropropane	5×10^{7}	25.52	4.5×10^{-6}
Nitrotoluene (25°C) (ortho or meta)	$<2 \times 10^{7}$	NA	NA
Octyl alcohol	1.39×10^{7}	10.34	6.9×10^{-6}
Phenetole (25°C)	$<1.7 \times 10^{6}$	NA	NA
Phenol	1×10^{6}	9.78	8.7×10^{-5}
Phenyl isothiocyante (25°C)	1.4×10^{8}	NA	NA
Phosgene (25°C)	7×10^{5}	NA	NA
Phosphorus (25°C)	4×10^{8}	NA	NA
Phosphorus oxychloride (25°C)	2.2×10^{8}	NA	NA
Pinene (23°C)	$<2 \times 10^{4}$	NA	NA
Piperidine (25°C)	$<2 \times 10^{7}$	NA	NA
Propionaldehyde (25°C)	8.5×10^{7}	18.5	1.9×10^{-6}
Propionic acid (25°C)	$<1 \times 10^{5}$	3.44	$>3.0 \times 10^{-4}$
Propionitrile	8.51×10^{6}	27.2	2.8×10^{-5}
Propyl acetate (i- or n-) (23°C)	6.5×10^{4}	6.002	NA
n-Propyl alcohol (25°C)	2×10^{6}	20.33	9×10^{-5}
Isopropyl alcohol (25°C)	3.5×10^{8}	19.92	5×10^{-7}
Propyl formate	5.5×10^{9}	7.72	1.2×10^{-8}
Pyridine (18°C)	5.3×10^{6}	12.4	2.1×10^{-5}
Quinoline (25°C)	2.2×10^{6}	9.0	3.6×10^{-5}
Salicylaldehyde (25°C)	1.6×10^{7}	13.9	7.5×10^{-6}
Succinonitrile	5.64×10^{10}	56.5	8.9×10^{-9}
Sulfolane	$<2 \times 10^{6}$	43.3	$>1.9 \times 10^{-4}$
Sulfonyl chloride (25°C)	2×10^{8}	NA	NA
Sulfuric acid (25°C)	1×10^{12}	NA	NA
Tetraethylene-pentamine	$>1 \times 10^{6}$	NA	NA
Tetramethylurea	$<6 \times 10^{6}$	23.06	$>3.4 \times 10^{-5}$
m-Toluidine	5.5×10^{4}	9.91	1.6×10^{-3}
o-Toluidine	3.79×10^{7}	6.34	1.5×10^{-6}
p-Toluidine (100°C)	6.2×10^{6}	4.98	7.1×10^{-6}
Trichloroacetic acid (25°C)	3×10^{5}	NA	NA
1,1,1-Trichloroethane	7.3×10^{5}	7.53	9.1×10^{-5}
Triethylene glycol	8.4×10^{6}	23.69	2.5×10^{-5}
Triethylenetetramine	$>1 \times 10^{6}$	NA	NA
Trimethylamine (–35°C)	2.2×10^{4}	NA	NA
Vinyl acetate	2.6×10^{4}	NA	NA
Water (extremely pure)	4.3×10^{6}	80.4	1.7×10^{-4}
Water (air distilled)	$\sim 1 \times 10^{9}$	80.4	7.1×10^{-4}
Semiconductive Liquids: Conductivity from 50 pS/m to 10^{4} pS/m			
Amyl acetate	2160	4.75	1.9×10^{-2}
Armeen	470	NA	NA
Biphenyl (liquid at 69°C – 120°C)	2500–10,000	NA	NA

Copyright 2014 National Fire Protection Association (NFPA). Licensed, by agreement, for individual use and download on October 4, 2014 to LEADER and READER for designated user PATTARAPORN SRITRAKOOL. No other reproduction or transmission in any form permitted without written permission of NFPA. For inquires or to report unauthorized use, contact licensing@nfpa.org.

Table B.2 *Continued*

Liquid	Conductivity (pS/m)	Dielectric Constant	Relaxation Time Constant (sec)
Bromobenzene	1200	5.40	4×10^{-2}
1-Bromonaphthalene	3660	4.83	1.1×10^{-2}
Butyl acetate (i- or n-)	4300	NA	NA
Butyl acrylate	3580	NA	NA
Chlorobenzene	7000	5.621	7.1×10^{-3}
Chloroform	<10,000	4.806	$>4.3 \times 10^{-3}$
Dibutyl sebacate	1700	4.54	2.4×10^{-2}
Dichlorobenzene	3000	9.93	2.9×10^{-3}
Ethylene dichloride	4000	10.36	2.2×10^{-2}
2-Ethylhexyl acrylate	610	NA	NA
Gasoline (leaded)	>50	2.3	<0.41
Hydrogen sulfide (at boiling point)	1000	NA	NA
Methylene chloride	4300	8.93	1.8×10^{-2}
Pentachloroethane	100	3.83	0.3
Sulfur (130°C)	5000	NA	NA
1,2,4-Trichlorobenzene	200	4.08	0.18
Trichloroethylene	800	3.42	3.7×10^{-2}
Vinyltrimethoxysilane (<2% methanol)	5900	NA	NA
Nonconductive Liquids: Conductivity <50 pS/m			
Anisole	10	4.33	3.8
Benzene (pure)	5×10^{-3}	2.3	~100 (dissipation)
Biphenyl (solid <69°C)	0.17	NA	NA
Bromine (17.2°C)	13	NA	NA
Butyl stearate	21	3.111	1.3
Caprylic acid	<37	2.45	>0.58
Carbon disulfide (1°C)	7.8×10^{-4}	2.6	~100 (dissipation)
Carbon tetrachloride	4×10^{-4}	2.238	~100 (dissipation)
Chlorine (–70°C)	<0.01	NA	NA
Cyclohexane	<2	2.0	>8.8
Decalin	6	2.18	3.2
Dichlorosilane	NA	NA	NA
Diesel oil (purified)	~0.1	~2	~100 (dissipation)
Diethyl ether	30	4.6	1.4
1,4-Dioxane	0.1	2.2	~100 (dissipation)
Ethyl benzene	30	2.3	0.68
Gasoline (straight run)	~0.1	~2	~100 (dissipation)
Gasoline (unleaded)	<50 (varies)	NA	NA
Heptane (pure)	3×10^{-2}	2.0	~100 (dissipation)
Hexane (pure)	1×10^{-5}	1.90	~100 (dissipation)
Hexamethyldisilazane	29	NA	NA
Isovaleric acid	40	2.64	>0.58
Jet fuel	0.01–50	2.2	0.39–100
Kerosene	1–50	2.2	0.39–19
Pentachlorodiphenyl	0.8	5.06	~100
Silicon tetrachloride	NA	NA	NA
Stearic acid (80°C)	<40	NA	NA
Styrene monomer	10	2.43	2.2
Sulfur (115°C)	100	NA	NA
Toluene	<1	2.38	21
Trichlorosilane	NA	NA	NA
Turpentine	22	NA	NA
Xylene	0.1	2.38	~100

NA: Not applicable.

Source: L. G. Britton, "Using Material Data in Static Hazard Assessment."

Copyright 2014 National Fire Protection Association (NFPA). Licensed, by agreement, for individual use and download on October 4, 2014 to LEADER and READER for designated user PATTARAPORN SRITRAKOOL. No other reproduction or transmission in any form permitted without written permission of NFPA. For inquires or to report unauthorized use, contact licensing@nfpa.org.

Annex C Additional Information on Flash Point

This annex is not a part of the recommendations of this NFPA document but is included for informational purposes only.

C.1 Errors in Flash Point Testing. The reported flash point of a liquid might not represent the minimum temperature at which a pool of liquid will form an ignitible atmosphere.

C.1.1 Typical closed-cup test methods involve downward flame propagation, which is more difficult than upward propagation, and the region where the test flame is introduced is normally fuel-lean relative to the liquid surface. Also, the volume of the test apparatus is too small to allow flame propagation of certain flammable vapors such as halogenated hydrocarbons.

C.1.2 Limitations of flash point test methods are discussed in ASTM E 502, *Standard Test Method for Selection and Use of ASTM Standards for the Determination of Flash Point of Chemicals by Closed Cup Methods*. In most cases, closed-cup flash points are lower than open-cup values.

C.2 Safety Margin for Use of Flash Point.

C.2.1 The temperature of interest in determining the hazard is the temperature at the exposed liquid surface, not that of the bulk liquid, because vapor is in equilibrium with the liquid at the surface. However, in many instances, the surface temperature is difficult to determine. While the surface temperature should be considered to the extent possible, most hazard evaluations are, by necessity and practicality, based on bulk temperature. Therefore, a safety factor should be applied where the hazard is assessed using the flash point.

C.3 Effect of Bulk Liquid Temperature.

C.3.1 The surface temperature of a quiescent liquid in a tank can significantly exceed the temperature of the bulk liquid due to heat transfer from the unwet upper walls of the tank, which in some cases could be heated by sunlight to as much as 60°C.

C.3.2 Because vapor–liquid equilibrium is established at the vapor–liquid interface, the higher surface temperature discussed in C.3.1 can result in a vapor concentration that is elevated compared to the concentration based on the bulk liquid temperature. An elevated concentration means that vapor in the tank could be ignitible, even if the bulk liquid temperature is less than the reported flash point, which can be a significant hazard during sampling. Vapor vented from large storage tanks could be at a concentration that is only 30 percent to 50 percent of theoretical saturation, based on bulk liquid temperature. This vapor also could be a significant hazard if tank vapor is assumed to be above the upper flammable limit (UFL).

C.4 Effect of Ambient Pressure.

C.4.1 The vapor pressure above a liquid depends only on the temperature at the surface and the time necessary to reach equilibrium. The fraction of the total pressure exerted by a vapor determines the composition of the vapor–air mixture. Thus, where the total pressure is reduced, as could be the case at high altitudes, the vapor concentration in air increases.

C.4.2 Because flash points are reported at a pressure of 1 atm [101.3 kPa (760 mm Hg)], an ambient pressure less than that value lowers the actual effective flash point. The flash point correction given in ASTM E 502, *Standard Test Method for Selection and Use of ASTM Standards for the Determination of Flash Point of Chemicals by Closed Cup Methods,* is expressed as follows:

$$FP_{corr}(°C) = C + 0.25\ (101.3 - A)$$
$$FP_{corr}(°C) = C + 0.03\ (760 - B)$$
$$FP_{corr}(°F) = F + 0.006\ (760 - B)$$

where:
FP_{corr} = corrected flash point
C = observed flash point (°C)
A = ambient barometric pressure (kPa)
B = ambient barometric pressure (mm Hg)
F = observed flash point (°F)

C.5 Effect of Low Concentrations of Volatiles. Low concentrations of volatile components in a liquid mixture can accumulate in the vapor space of a container over time, which can reduce the flash point to a temperature below the reported value. This effect can result from off-gassing, chemical reaction, or some other mechanism. An example is bitumen. Similarly, if a tank truck is not cleaned after delivering gasoline, and a higher flash point liquid, such as kerosene or diesel fuel, is transferred to it, the residual gasoline will create an ignitible atmosphere both in the truck's tank and possibly in the receiving tank as well. Solids that contain more than 0.2 weight percent flammable solvent need to be evaluated for their potential to form ignitible vapor in containers.

C.6 Liquid Mist.

C.6.1 If a liquid is dispersed in air in the form of a mist, it is possible for a flame to be propagated through the mist, even at temperatures below the liquid's flash point.

C.6.2 In cases such as those described in C.6.1, the mist droplets behave like dust particles. The flash point of the liquid is irrelevant in determination of the combustibility of mists. Even at very low liquid temperatures, frozen liquid droplets can burn. Ease of ignition and rate of combustion both increase as the droplet size of the mist decreases. Depending on the volatility of the liquid, droplets with diameters less than 20 µm to 40 µm typically vaporize and ignite ahead of a flame front, and their overall combustion behavior is similar to that of a vapor.

C.6.3 Because mists usually are produced by some form of shear process, and those processes also generate static electricity, it is good practice to avoid splashing and other procedures that generate mist inside equipment.

Annex D Additional Information on Vapor Pressure

This annex is not a part of the recommendations of this NFPA document but is included for informational purposes only.

D.1 Vapor Pressure.

D.1.1 The vapor pressure can be used with a measured lower flammable limit (LFL) to estimate the flash point. Usually, the calculated flash point is less than the measured value due to limitations in the flash point test technique. Conversely, only an approximate estimate of the LFL can be made from the flash point.

D.1.2 The vapor pressure can be used to replace the concentration volume axis shown in Figure 9.2.3 with the corresponding temperatures required to generate the concentrations shown in the figure. This method allows the determination of the equilibrium liquid temperature at which vapor ignition is most probable, corresponding to generation of the vapor–air

Copyright 2014 National Fire Protection Association (NFPA). Licensed, by agreement, for individual use and download on October 4, 2014 to LEADER and READER for designated user PATTARAPORN SRITRAKOOL. No other reproduction or transmission in any form permitted without written permission of NFPA. For inquires or to report unauthorized use, contact licensing@nfpa.org.

mixture having the lowest minimum ignition energy (MIE). For many liquids, this point is approximately halfway between the LFL and the upper flammable limit (UFL). For example, benzene generates its lowest MIE vapor–air mixture at about 7°C (4.8 percent benzene vapor in air), and toluene generates its lowest-MIE vapor–air mixture at about 26°C (4.1 percent toluene vapor in air). Therefore, for operations conducted at room temperatures, toluene is more prone to ignition from a low-energy static electric discharge than is benzene. In closed containers at equilibrium, benzene becomes too rich to burn (the concentration of vapor exceeds its UFL of 8 percent) at temperatures above about 16°C. Conversely, at about 7°C, benzene is more easily ignited than toluene, because the latter will generate a vapor composition not far above its LFL. Some of the lowest-MIE compositions are given in Table B.1.

D.2 High Vapor Pressure Liquids.

D.2.1 High vapor pressure liquids are defined in API RP 2003, *Protection Against Ignitions Arising Out of Static, Lightning, and Stray Currents*, as having "a Reid vapor pressure above 4.5 psia" (an absolute pressure of 31 kPa). At normal handling temperatures, rapid evaporation of such liquids minimizes the duration of a flammable atmosphere above the liquid during loading, and the UFL is soon exceeded. However, if there is no initial heel in the tank and the tank is not inerted, the flammable range will be traversed prior to vapor equilibrium being attained.

D.2.2 The duration of the ignitible atmosphere is minimal for liquefied gases such as propylene, but it could be considerable for certain petroleum distillate fuels. Inerting might be considered where high vapor pressure nonconductive liquids are loaded into tanks containing air with no liquid heel.

D.3 Intermediate Vapor Pressure Liquids.

D.3.1 Intermediate vapor pressure liquids are defined in API RP 2003, *Protection Against Ignitions Arising Out of Static, Lightning, and Stray Currents*, as having "a Reid vapor pressure below 4.5 psia" (an absolute pressure of 31 kPa) and a closed-cup flash point below 38°C. They are most likely to generate ignitible mixtures in vessels at ordinary temperatures.

D.3.2 Although graphical methods have been proposed to estimate whether liquids are likely to generate ignitible atmospheres at various temperatures, based on their Reid vapor pressures, such graphs were originally derived for petroleum fuel mixtures and do not always apply to other flammable liquids.

D.4 Low Vapor Pressure Liquids. Low vapor pressure liquids are Class II and Class III combustible liquids (i.e., with closed-cup flash points above 38°C) and will generate ignitible atmospheres only if handled at an elevated temperature, suspended as a mist, or subject to slow vapor evolution. However, static electricity generated during handling could ignite vapors present from previous operations.

Annex E Additional Information on Charge Relaxation

This annex is not a part of the recommendations of this NFPA document but is included for informational purposes only.

E.1 General. Charge relaxation is characterized by a time constant, which is the time required for a charge to dissipate to e^{-1} (approximately 37 percent) of its original value, assuming that charge relaxation follows exponential decay. This time constant is determined from the following equation:

$$\tau = \frac{\varepsilon\varepsilon_0}{\kappa}$$

where:
- τ = charge relaxation time constant (seconds)
- ε = dielectric constant for the liquid
- ε_0 = electrical permitttivity of a vacuum = 8.845×10^{-12} farads per meter
- κ = liquid conductivity (siemens per meter)

E.1.1 Overall, the time constant provides some indication of a liquid's potential for accumulating a static electric charge. Exponential, or "ohmic," decay has been experimentally confirmed for hydrocarbon liquids having conductivities of 1 pS/m or greater and is described by the following equation:

$$Q_t = Q_0 e^{-t\kappa/\varepsilon\varepsilon_0}$$

where:
- Q_t = charge density (coulombs per cubic meter)
- Q_0 = initial charge density (coulombs per cubic meter)
- e = base of natural logarithms = 2.718
- t = elapsed time (seconds)
- κ = liquid conductivity (siemens per meter)
- ε = dielectric constant for the liquid
- ε_0 = electrical permitttivity of a vacuum = 8.845×10^{-12} farads per meter

E.1.2 According to Bustin et al. in the API publication *New Theory for Static Relaxation from High Resistivity Fuel*, the rate at which charge is lost depends on the conductivity of the liquid. The lower the conductivity, the slower is the relaxation. Liquids with conductivity of less than 1 pS/m relax differently when they are highly charged. The usual relationship described by Ohm's law does not apply. Instead, for nonviscous liquids (i.e., less than 30×10^{-6} m^2/sec), relaxation precedes hyperbolic decay.

E.1.2.1 The Bustin theory of charge relaxation has been experimentally confirmed for low-conductivity hydrocarbon liquids, both in small-scale laboratory experiments and in full-scale tests and is described by the following equation:

$$Q_t = \frac{Q_0}{\left(1 + \mu Q_0 t/\varepsilon\varepsilon_0\right)}$$

where:
- Q_t = charge density (coulombs per cubic meter)
- Q_0 = initial charge density (coulombs per cubic meter)
- μ = ion mobility (square meters per volt-second), about 1×10^{-8} m^2/V-sec for charged distillate oil
- t = elapsed time (seconds)
- $\varepsilon\varepsilon_0$ = electrical permittivity for the liquid (farads per meter)

E.1.2.2 The Bustin theory of charge relaxation depends only on the initial charge density, Q_0, and ion mobility, μ. The conductivity of the uncharged liquid is not a factor. In addition, Bustin charge decay theory is not very sensitive to initial charge density where the initial charge density is greater than about 100 microcoulombs per cubic meter.

Copyright 2014 National Fire Protection Association (NFPA). Licensed, by agreement, for individual use and download on October 4, 2014 to LEADER and READER for designated user PATTARAPORN SRITRAKOOL. No other reproduction or transmission in any form permitted without written permission of NFPA. For inquires or to report unauthorized use, contact licensing@nfpa.org.

Annex F Additional Information on Conductivity

This annex is not a part of the recommendations of this NFPA document but is included for informational purposes only.

F.1 Classification of Liquids Based on Conductivity. The conductivity of most flammable and combustible liquids varies from about 10^{-2} pS/m to 10^{10} pS/m (i.e., by 12 orders of magnitude). Dielectric constants usually range from 2 to 40, the higher values generally being exhibited by polar liquids, which also exhibit higher conductivity.

F.1.1 Because relaxation behavior is governed primarily by conductivity, conductivity can be used to classify liquids relative to their potential for charge accumulation as nonconductive, semiconductive, and conductive. Because conductivity is so sensitive to purity and temperature, class demarcations can be given only to within an order of magnitude.

F.1.2 It should be kept in mind that conductivity under actual conditions could be less than what is measured in the laboratory. *(See Annex B for conductivity values and relaxation times for some typical liquids.)*

F.2 Nonconductive Liquids.

F.2.1 Liquids that have relaxation time constants greater than 0.36 sec (equivalent to a conductivity of less than 50 pS/m for typical hydrocarbons having dielectric constants of about 2) are considered nonconductive. Examples include purified toluene and most low-sulfur diesel oils.

F.2.2 Nonconductive liquids, as specified in F.2.1, are highly susceptible to variation due to trace contamination. Corona and brush discharges, rather than spark discharges, are observed from charged nonconductive liquids. Because only partial discharge is possible, induction charging from highly charged plastic containers is not a significant hazard. Nonconductive liquids are most prone to accumulate charge in grounded metallic containers.

F.2.3 For the purposes of this recommended practice, the criterion of 50 pS/m is not ironclad; the dielectric constant also plays a role. For example, the dielectric constant of ethyl ether is 4.6, versus 2.3 for benzene. Therefore, the relaxation time constant for ethyl ether at a conductivity of 100 pS/m is approximately the same as that for benzene at a conductivity of 50 pS/m. It is the relaxation time constant, not the conductivity alone, that determines the rate of loss of charge.

F.3 Semiconductive Liquids.

F.3.1 Liquids that have relaxation time constants ranging from 0.36 sec down to 0.002 sec (equivalent to a conductivity range between 50 pS/m and 10^4 pS/m for typical hydrocarbons having dielectric constants of about 2) are considered conductive. Examples include crude oil and butyl acetate.

F.3.2 Semiconductive liquids tend not to accumulate charge, except where charging rates are extremely high or where they are effectively isolated from ground, such as where they flow through a rubber hose or end-of-line "polishing" filters. Spark discharges are possible from the more conductive of these liquids.

F.4 Conductive Liquids.

F.4.1 Liquids that have relaxation time constants of less than 0.002 sec (equivalent to a conductivity greater than 10^4 pS/m for typical hydrocarbons having dielectric constants of about 2) are considered highly conductive. These liquids tend not to accumulate charge, except where handling conditions isolate them from ground. Such conditions include complete isolation in the form of a droplet suspended in air, partial isolation by suspension in another liquid, and containment in a plastic or other highly resistive container.

F.4.2 Conductive liquids are most prone to induction charging by plastic containers and are sufficiently conductive to lose much of the induced charge in the form of a spark.

F.5 Changes in Conductivity Caused by Solidification.

F.5.1 Liquids can undergo a sudden and dramatic decrease in conductivity at their freezing points, which in some cases can cause unexpected static electricity hazards. For example, the conductivity of biphenyl decreases by four orders of magnitude between the liquid phase (above 69°C) and the solid phase. A static electric ignition was reported where biphenyl at 120°C was loaded into a tank containing a thick layer of solid biphenyl from a previous operation.

F.5.2 Normally, hot biphenyl is conductive enough to rapidly dissipate charge where loaded into a grounded metal tank. However, due to the presence of the thick, insulating layer of solid biphenyl, charge was able to accumulate, and a brush discharge occurred from the liquid surface to the fill pipe.

Annex G Recommended Means for Providing Bonding and Grounding

This annex is not a part of the recommendations of this NFPA document but is included for informational purposes only.

G.1 Diagrams. Figure G.1(a) through Figure G.1(k) are reprinted from National Paint and Coatings Association (NPCA), *Generation and Control of Static Electricity*. Refer to this publication for additional diagrams.

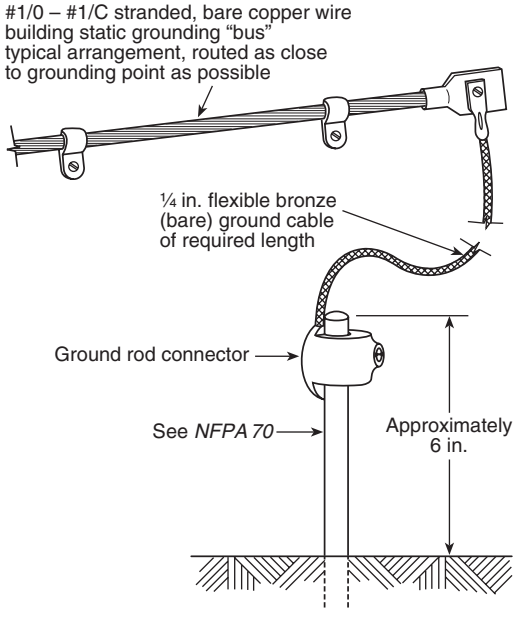

FIGURE G.1(a) Ground Bus Connection to Ground Rod. ***(Source: NPCA, Generation and Control of Static Electricity.)***

Copyright 2014 National Fire Protection Association (NFPA). Licensed, by agreement, for individual use and download on October 4, 2014 to LEADER and READER for designated user PATTARAPORN SRITRAKOOL. No other reproduction or transmission in any form permitted without written permission of NFPA. For inquires or to report unauthorized use, contact licensing@nfpa.org.

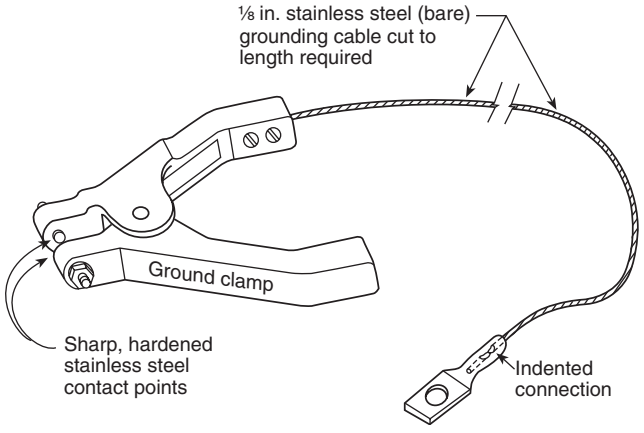

FIGURE G.1(b) Small Ground Clamp. *(Source: NPCA, Generation and Control of Static Electricity.)*

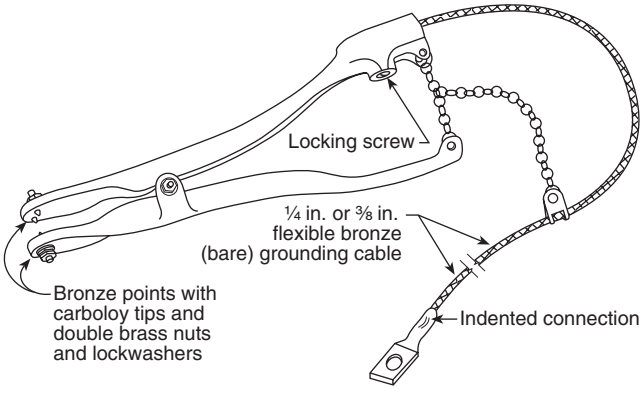

FIGURE G.1(c) Large Ground Clamp. *(Source: NPCA, Generation and Control of Static Electricity.)*

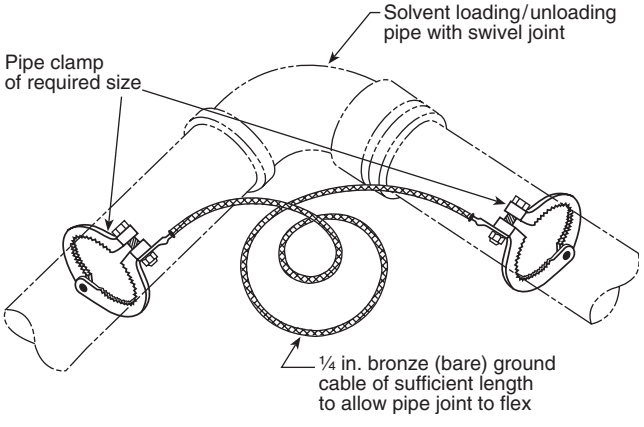

FIGURE G.1(d) Pipe Grounding Jumper. *(Source: NPCA, Generation and Control of Static Electricity.)*

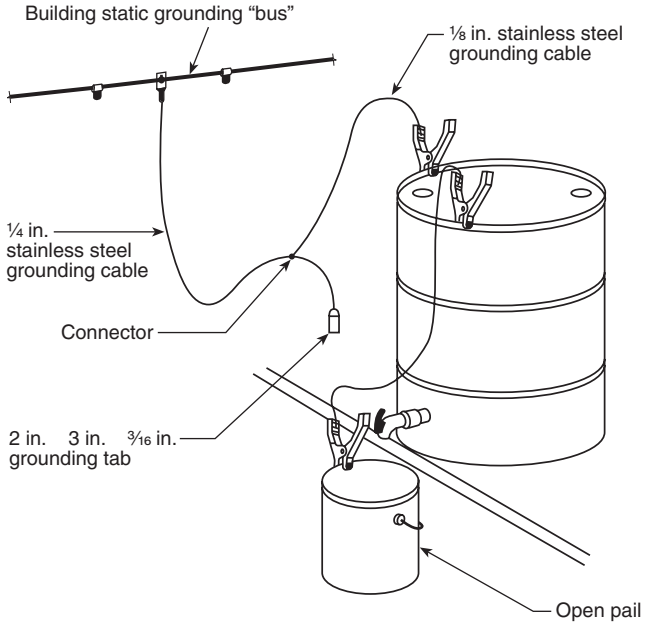

FIGURE G.1(e) Typical Grounding System for Small Volume Solvent Dispensing via Drum Tap. *(Source: NPCA, Generation and Control of Static Electricity.)*

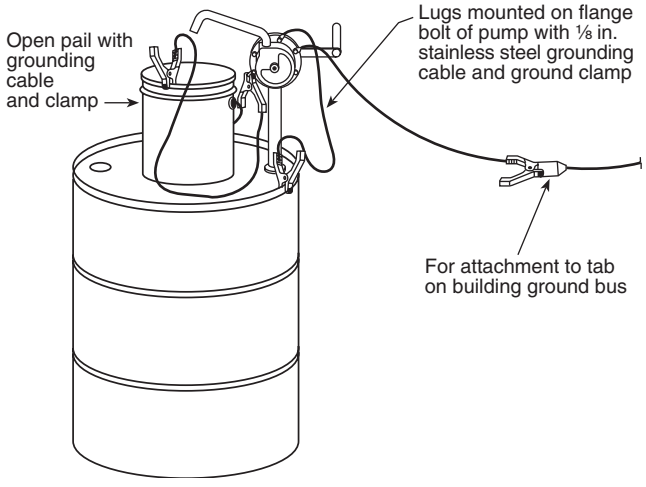

FIGURE G.1(f) Typical Grounding System for Small Volume Solvent Dispensing via Drum Pump. *(Source: NPCA, Generation and Control of Static Electricity.)*

Copyright 2014 National Fire Protection Association (NFPA). Licensed, by agreement, for individual use and download on October 4, 2014 to LEADER and READER for designated user PATTARAPORN SRITRAKOOL. No other reproduction or transmission in any form permitted without written permission of NFPA. For inquires or to report unauthorized use, contact licensing@nfpa.org.

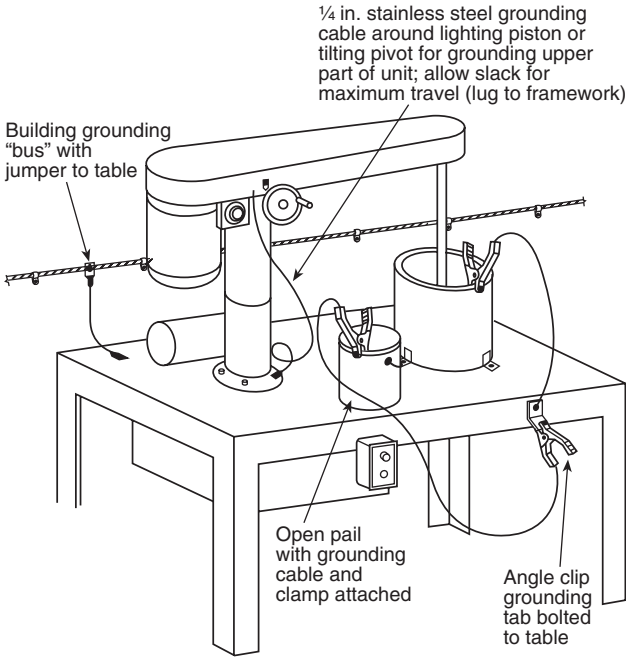

FIGURE G.1(g) Typical Grounding System for Small Equipment. *(Source: NPCA, Generation and Control of Static Electricity.)*

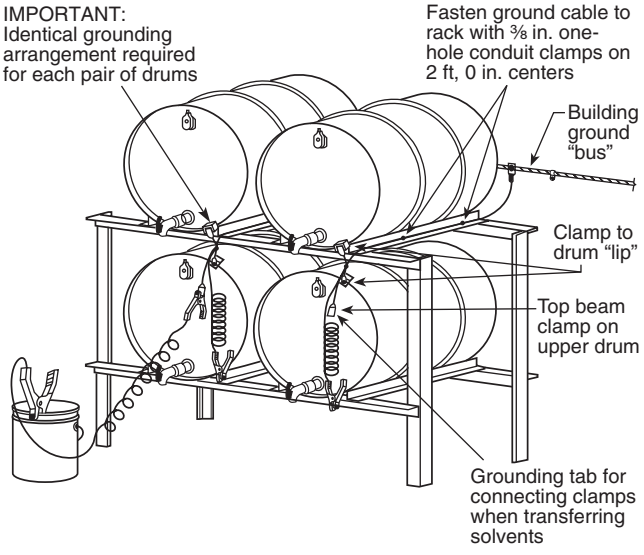

FIGURE G.1(h) Typical Grounding System for Small Volume Solvent Handling at Dispensing Station. *(Source: NPCA, Generation and Control of Static Electricity.)*

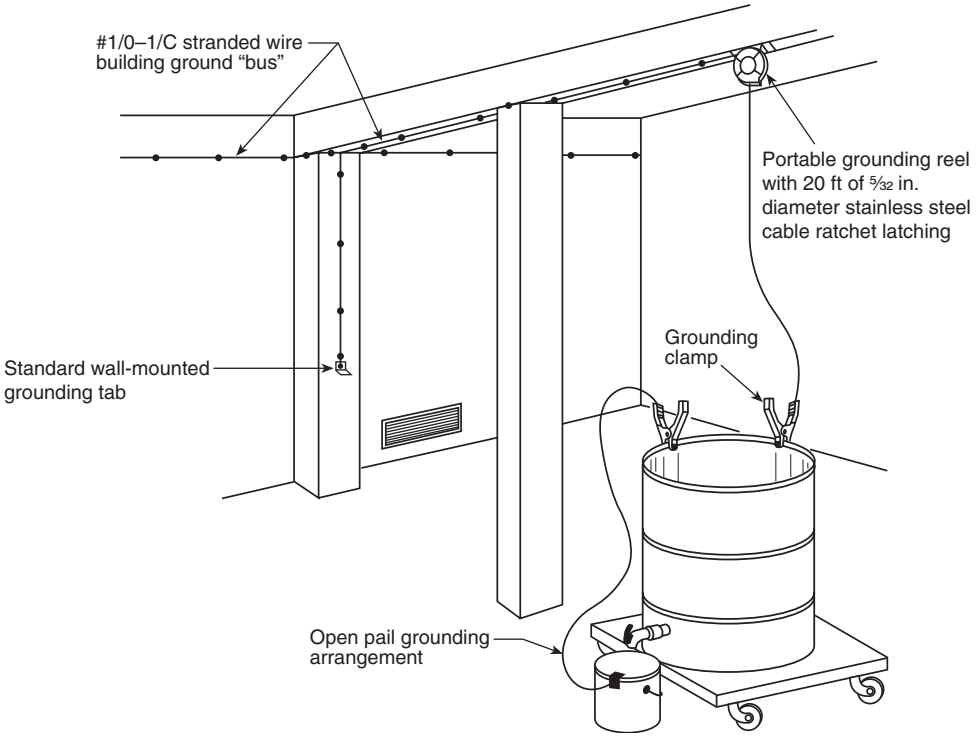

FIGURE G.1(i) Typical Grounding System for Small Volume for Portable Tank and Drum Transfer Area. *(Source: NPCA, Generation and Control of Static Electricity.)*

Copyright 2014 National Fire Protection Association (NFPA). Licensed, by agreement, for individual use and download on October 4, 2014 to LEADER and READER for designated user PATTARAPORN SRITRAKOOL. No other reproduction or transmission in any form permitted without written permission of NFPA. For inquires or to report unauthorized use, contact licensing@nfpa.org.

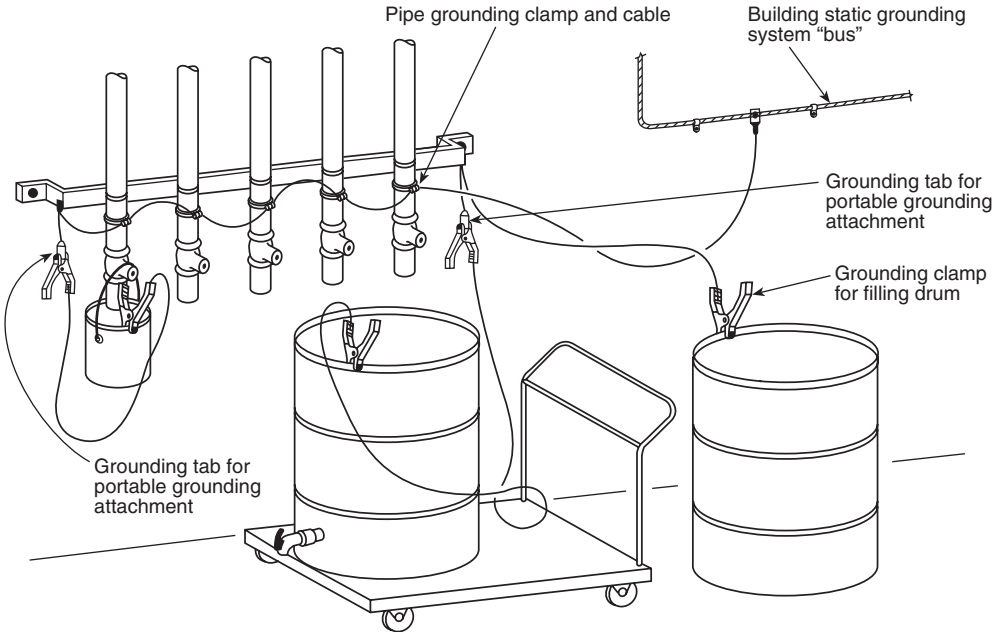

FIGURE G.1(j) Typical Grounding System for Drum Rack. *(Source: NPCA, Generation and Control of Static Electricity.)*

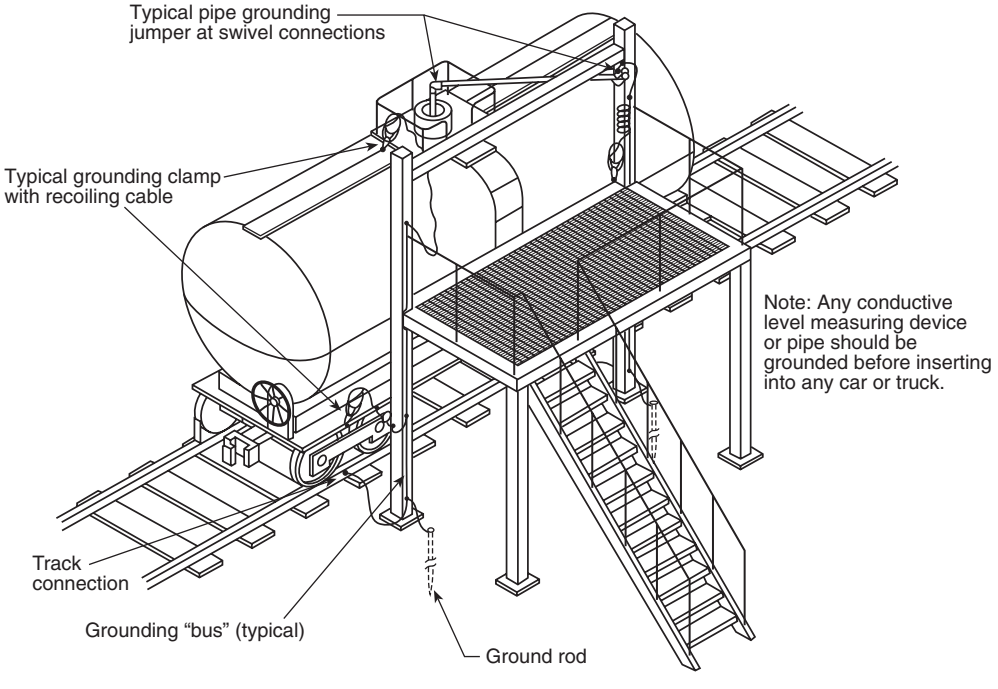

FIGURE G.1(k) Typical Grounding System for Tank Car or Tank Truck Loading/Unloading Station. *(Source: NPCA, Generation and Control of Static Electricity.)*

Copyright 2014 National Fire Protection Association (NFPA). Licensed, by agreement, for individual use and download on October 4, 2014 to LEADER and READER for designated user PATTARAPORN SRITRAKOOL. No other reproduction or transmission in any form permitted without written permission of NFPA. For inquires or to report unauthorized use, contact licensing@nfpa.org.

Annex H Glossary of Terms

This annex is not a part of the recommendations of this NFPA document but is included for informational purposes only.

H.1 General. This glossary contains terms and definitions that are not included in Chapter 3. The terms are presented here to assist the user.

H.2 Terms.

H.2.1 Air Ionizer. A device for producing ions in air. Ions from an air ionizer can be attracted to stationary charges on nonconductive items (or items insulated from ground) to eliminate the charge imbalance. Other air ionizers are used to inject ions of a single polarity into an enclosure.

H.2.2 Alternating Current Static Neutralizer. See H.2.16.1.

H.2.3 Bulk Density. The mass per unit volume of a dust pile or a dust deposit.

H.2.4 Conductive Floor. Flooring that has an average resistance between 2.5×10^3 ohms and 1×10^6 ohms where measured using specified electrodes placed a specified distance apart. *(See* NFPA 99, *Health Care Facilities Code.)*

H.2.5 Conductive Hose. Hose that has an electrical resistance of less than 10^3 ohms per meter, where measured between the end connectors.

H.2.6 Coulomb. A quantity of electrons equal to 6.24×10^{18} electrons; also, the quantity of electricity on the positive plate of a capacitor of 1 farad capacitance where the potential difference across the plates is 1 volt.

H.2.7 Dielectric Breakdown. A voltage-dependent failure mechanism that occurs where a potential difference is applied across a dielectric region that exceeds the region's inherent breakdown characteristics.

H.2.8 Electrically Powered Static Neutralizer. See H.2.16.2.

H.2.9 Electrostatic Field. The electric force per unit charge that is produced by a distribution of charge; also called the *electric field intensity* or *potential gradient*. An electrostatic field can be most easily thought of as lines of influence originating from unit positive charges and terminating at unit negative charges or at infinity. It is, therefore, closely related to charges on surfaces and in gas streams.

H.2.10 Electrostatic Field Meter. A device that estimates the electric field from a charged object by sensing the charge and the charge polarity on the surface of a conductor or insulator.

H.2.11 Faraday Cage. An electrically continuous, conductive enclosure that provides a shield from static electricity (region of no electrostatic field). The cage or shield is usually grounded, although grounding is not necessary.

H.2.12 Field Charging. Charging of particles in an electric field as the result of ions from a corona or other source; also known as ion-bombardment charging. The maximum charge that a particle can gain by field charging is proportional to the cross-sectional area of the particle and the strength of the electric field. Field charging is a dominant particle-charging mechanism for particles larger than a few tenths of a micron.

H.2.13 Field Suppression. The observed reduction in electric field away from an object when it is brought near a grounded object. The effect results from a repositioning of the electric field lines toward the grounded surface.

H.2.14 Joule. A unit of work and energy equal to 1 W-sec.

H.2.15 Limiting Oxidant Concentration (LOC). The lowest molar (or volume) gas-phase concentration of oxidant at which a specified fuel can propagate a flame.

H.2.16 Static Neutralizer.

H.2.16.1 *Alternating Current Static (ac) Neutralizer.* A static neutralizer that uses an alternating current corona to generate positive and negative ions. Ions from this equipment are drawn from the ionizer to neutralize charged (usually insulating) surfaces. The frequency for ac static neutralizers is usually that of line frequency, 50 Hz to 60 Hz.

H.2.16.2 *Electrically Powered Static Neutralizer.* A static neutralizer that uses one or more electrified needles rigidly held in a housing and a high-potential supply that powers the neutralizer. Ion generation occurs in the air space surrounding the highly charged needle points.

H.2.17 Surface Charge Density. The charge per unit area of solid surface expressed in coulombs per square meter. In air, the maximum surface charge density before air breakdown occurs is 2.65×10^{-5} C/m^2. In most practical situations, only a fraction of this value is achieved.

H.2.18 Tribocharging. Charge separation caused by the rubbing of surfaces, creating triboelectricity.

Annex I Bibliography

I.1 Referenced Publications. The documents or portions thereof listed in this annex are referenced within the informational sections of this recommended practice and are not part of the recommendations of this document unless also listed in Chapter 2 for other reasons.

Cross, J. A., *Electrostatics: Principles, Problems and Applications*, Adam Hilger, Bristol, England, UK, 1987 [ISBN 0-85274-589-3]

Guest, P. G., *Static Electricity in Nature and Industry*, U.S. Department of Commerce — Bureau of Mines, U.S. Government Printing Office, Washington, DC, USA, 1939

Moore, A. D., Ed., *Electrostatics and Its Application*, 2nd Ed., John Wiley & Sons — Wiley Interscience, New York, NY, USA, 1973 [ISBN 0-471-61450-5]

Moore, A. D., *Electrostatics — Exploring, Controlling, and Using Static Electricity*, 2nd Ed., Laplacian Press, Morgan Hill, CA, USA, 1997 [ISBN 1-885540-04-3]

Pratt, T. H., *Electrostatic Ignitions of Fires and Explosions*, Center for Chemical Process Safety, 1997, John Wiley & Sons, New York, NY

Pratt, T. H., *Possible Electrostatic Hazards in Material Handling Systems*, 1992 Process Plant Safety Symposium, South Texas Section, American Institute of Chemical Engineers, 1992, pp. 1114-1123

Uman, M. A., *Lightning*, Dover Publications, New York, NY, USA, 1989

Annex J Informational References

J.1 Referenced Publications. The following documents or portions thereof are referenced within this recommended practice for informational purposes only and are thus not part of the recommendations of this document unless also listed in Chapter 2.

Copyright 2014 National Fire Protection Association (NFPA). Licensed, by agreement, for individual use and download on October 4, 2014 to LEADER and READER for designated user PATTARAPORN SRITRAKOOL. No other reproduction or transmission in any form permitted without written permission of NFPA. For inquires or to report unauthorized use, contact licensing@nfpa.org.

J.1.1 NFPA Publications. National Fire Protection Association, 1 Batterymarch Park, Quincy, MA 02169-7471.

NFPA 30, *Flammable and Combustible Liquids Code*, 2012 edition.

NFPA 30A, *Code for Motor Fuel Dispensing Facilities and Repair Garages*, 2012 edition.

NFPA 33, *Standard for Spray Application Using Flammable or Combustible Materials*, 2011 edition.

NFPA 53, *Recommended Practice on Materials, Equipment, and Systems Used in Oxygen-Enriched Atmospheres*, 2011 edition.

NFPA 69, *Standard on Explosion Prevention Systems*, 2008 edition.

NFPA 70®, *National Electrical Code®*, 2014 edition.

NFPA 99, *Health Care Facilities Code*, 2012 edition.

NFPA 302, *Fire Protection Standard for Pleasure and Commercial Motor Craft*, 2010 edition.

NFPA 318, *Standard for the Protection of Semiconductor Fabrication Facilities*, 2012 edition.

NFPA 326, *Standard for the Safeguarding of Tanks and Containers for Entry, Cleaning, or Repair*, 2010 edition.

NFPA 407, *Standard for Aircraft Fuel Servicing*, 2012 edition.

NFPA 780, *Standard for the Installation of Lightning Protection Systems*, 2014 edition.

J.1.2 Other Publications.

J.1.2.1 AIChE Publications. American Institute of Chemical Engineers, 3 Park Avenue, New York, NY 10016-5901.

Britton, L. G., *Avoiding Static Ignition Hazards in Chemical Operations*, 1999.

Britton, L. G., "Using Material Data in Static Hazard Assessment," *Plant/Operations Progress*, Vol. 11, April 1992, pp. 56–70.

Britton, L. G. and Walmsley, H. L., "Static Electricity — New Guidance for Storage Tank Loading Rates," Process Safety Progress, Vol. 31, No. 3, September 2012, pp 219-229.

J.1.2.2 API Publications. American Petroleum Institute, 1220 L Street, NW, Washington, DC 20005.

Bustin, W. M., et al., *New Theory for Static Relaxation from High Resistivity Fuel*, API Refining Division Proceedings, Vol. 44, No. 3, 1964.

API RP 2003, *Protection Against Ignitions Arising Out of Static, Lightning, and Stray Currents*, 7th edition, September, 2008.

API 2219, *Safe Operation of Vacuum Trucks in the Petroleum Service*, 3rd edition, 2005.

J.1.2.3 ASTM Publications. ASTM International, 100 Barr Harbor Drive, P.O. Box C700, West Conshohocken, PA 19428-2959.

ASTM D 257, *Standard Test Methods for DC Resistance or Conductance of Insulating Materials*, 2007.

ASTM D 991, *Standard Test Method for Rubber Property - Volume Resistivity of Electrically Conductive and Antistatic Products*, 2010.

ASTM E 502, *Standard Test Method for Selection and Use of ASTM Standards for the Determination of Flash Point of Chemicals by Closed Cup Methods*, 2007.

ASTM F 2413, *Standard Specification for Performance Requirements for Foot Protection*, 2005.

J.1.2.4 CENELEC Publications. European Committee for Electrotechnical Standardization (CENELEC), Rue de Stassart, 35, B - 1050 Brussels, Belgium.

CENELEC Technical Report CLC/TR 50404, *Electrostatics - Code of Practice for the Avoidance of Hazards Due to Static Electricity*, June 2003.

CLC/TC 44X, *Safety of Machinery: Electrotechnical Aspects.*

J.1.2.5 NPCA Publications. National Paint and Coatings Association, 1500 Rhode Island Avenue, NW, Washington, DC 20005-5597.

Generation and Control of Static Electricity in Coatings Operations, 2010.

J.1.2.6 Other Publications. *Process Safety Progress*, Vol. 21, No. 1, March 2003.

Britton, L. G., and Smith, J. A., "Static Hazards of the VAST," *Journal of Loss Prevention in the Process Industries*, Vol. 25, 2012, pp. 309-328, Elsevier.

J.2 Informational References. (Reserved)

J.3 References for Extracts in Informational Sections. (Reserved)

Copyright 2014 National Fire Protection Association (NFPA). Licensed, by agreement, for individual use and download on October 4, 2014 to LEADER and READER for designated user PATTARAPORN SRITRAKOOL. No other reproduction or transmission in any form permitted without written permission of NFPA. For inquires or to report unauthorized use, contact licensing@nfpa.org.

Index

Copyright © 2013 National Fire Protection Association. All Rights Reserved.

The copyright in this index is separate and distinct from the copyright in the document that it indexes. The licensing provisions set forth for the document are not applicable to this index. This index may not be reproduced in whole or in part by any means without the express written permission of NFPA.

-A-

Additional Information on Charge Relaxation ..... Annex E
Additional Information on Conductivity ..... Annex F
Additional Information on Flash Point ..... Annex C
Additional Information on Vapor Pressure ..... Annex D
Administration ..... Chap. 1
Application (Reserved) 1.3
Equivalency 1.4
Purpose 1.2
Scope 1.1
Reserved 1.1.3
Symbols, Units, and Formulas 1.5
Antistatic
Antistatic Additive
Definition 3.3.1.1, A.3.3.1.1
Definition 3.3.1
Approved
Definition 3.2.1, A.3.2.1
Authority Having Jurisdiction (AHJ)
Definition 3.2.2, A.3.2.2

-B-

Bibliography ..... Annex I
Bonding
Definition 3.3.2
Breakdown Strength
Definition 3.3.3
Breakdown Voltage
Definition 3.3.4

-C-

Capacitance
Definition 3.3.5, A.3.3.5
Charge
Charge Decay Time
Definition 3.3.6.1
Charge Density
Definition 3.3.6.2
Charge Relaxation
Definition 3.3.6.3
Definition 3.3.6
Charging
Definition 3.3.7
Induction Charging
Definition 3.3.7.1
Triboelectric Charging
Definition 3.3.7.2, A.3.3.7.2
Combustible
Definition 3.3.8
Combustible Dust
Definition 3.3.9
Combustion
Definition 3.3.10
Conductive
Definition 3.3.11
Conductivity (σ)
Definition 3.3.12, A.3.3.12
Conductor
Definition 3.3.13
Control of Static Electricity and Its Hazards by Process Modification and Grounding ..... Chap. 7
Charge Dissipation 7.4
Bonding and Grounding 7.4.1
Charge Relaxation and Antistatic Treatments 7.4.3
Humidification 7.4.2
Control of Generation of Static Electric Charge 7.3
Control of Ignitible Mixtures in Equipment 7.2
General 7.2.1
Inerting 7.2.2
Relocation 7.2.4
Ventilation 7.2.3
General 7.1
Control of Static Electricity and Its Hazards by Static Eliminators and Personnel Factors ..... Chap. 8
Charge Neutralization by Ionization of Air 8.1
Active Electric Static Neutralizers 8.1.3
Active Radioactive Static Neutralizers 8.1.4
General 8.1.1
Inductive Neutralizers 8.1.2
Control of Static Electric Charge on Personnel 8.2
Antistatic or Conductive Clothing 8.2.4
Cleaning or Wiping Cloths 8.2.6
Conductive and Static Dissipative Flooring and Footwear 8.2.2
Gloves 8.2.5
Personnel Grounding Devices 8.2.3, A.8.2.3
Prevention of Charge Accumulation 8.2.1
Discomfort and Injury 8.4
Maintenance and Testing 8.3
Current (I)
Charging Current (I_c)
Definition 3.3.14.1
Definition 3.3.14
Streaming Current (I_s)
Definition 3.3.14.2

-D-

Definitions ..... Chap. 3
Dielectric Constant
Definition 3.3.15, A.3.3.15
Dielectric Strength
Definition 3.3.16, A.3.3.16
Discharge
Brush Discharge
Definition 3.3.17.1, A.3.3.17.1
Bulking Brush Discharge
Definition 3.3.17.2, A.3.3.17.2
Corona Discharge
Definition 3.3.17.3, A.3.3.17.3
Definition 3.3.17
Propagating Brush Discharge
Definition 3.3.17.4, A.3.3.17.4
Dissipative
Definition 3.3.18, A.3.3.18
Double Layer
Definition 3.3.19, A.3.3.19

Copyright 2014 National Fire Protection Association (NFPA). Licensed, by agreement, for individual use and download on October 4, 2014 to LEADER and READER for designated user PATTARAPORN SRITRAKOOL. No other reproduction or transmission in any form permitted without written permission of NFPA. For inquires or to report unauthorized use, contact licensing@nfpa.org.

-E-

Electrometer
Definition 3.3.20
Evaluating Static Electricity Hazards ..... Chap. 6
Assessment of Conduction Paths 6.8
General 6.1
General Practices 6.5
Measuring a Static Electric Charge 6.2
Measuring Ignition Energies 6.10
Measuring Spark Discharge Energies 6.9
Measuring the Accumulation and Relaxation of Charge 6.6
Measuring the Charge on a Conductor 6.3
Measuring the Charge on a Nonconductor 6.4
Measuring the Resistivity of Materials 6.7
Explanatory Material ..... Annex A

-F-

Flammable and Combustible Liquids and Their Vapors ..... Chap. 9
Combustion Characteristics of Liquids, Vapors, and Mists 9.2
Flammable Limits and Vapor Pressure 9.2.2, A.9.2.2
Flash Point 9.2.1
Ignition Energy 9.2.3
Oxidant Concentration 9.2.4, A.9.2.4
General 9.1
Generation and Dissipation of Static Electric Charge in Liquids 9.3
Charge Generation 9.3.1, A.9.3.1
Charge Relaxation 9.3.2, A.9.3.2
Factors That Affect Liquid Charging 9.3.3
Flammable Limit
Definition 3.3.21
Lower Flammable Limit (LFL)
Definition 3.3.21.1
Upper Flammable Limit (UFL)
Definition 3.3.21.2
Fluid Flow in Piping, Hose, Tubing, and Filters ..... Chap. 10
Fill Pipes 10.4
Filtration 10.5
Microfilters 10.5.1
Polishing Filters 10.5.3
Strainers 10.5.2
Flexible Hose and Tubing 10.3, A.10.3
Metal Piping Systems 10.1, A.10.1
Miscellaneous Line Restrictions 10.7
Nonconductive Pipe and Lined Pipe 10.2, A.10.2
Suspended Material 10.6
Fundamentals of Static Electricity ..... Chap. 5
Accumulation and Dissipation of Charge 5.4
Charging by Induction 5.3
Induction Charging of Personnel 5.3.2
Theory of Induction Charging 5.3.1
Discharge of Static Electricity and Ignition Mechanisms 5.5
Corona Discharge 5.5.2
Discharge on the Surface of an Insulator Backed by a Conductor 5.5.7
Discharges Between Conductors and Insulators 5.5.6
General 5.5.1
Hybrid Mixtures 5.5.4
Sparks Between Conductors 5.5.3
Static Electric Discharge from the Human Body 5.5.5
General 5.1
Separation of Charge by Contact of Materials 5.2

-G-

Glossary of Terms ..... Annex H
Grounding
Definition 3.3.22

-I-

Ignitible Mixture
Definition 3.3.23
Ignition Energy
Definition 3.3.24
Minimum Ignition Energy (MIE)
Definition 3.3.24.1
Incendive
Definition 3.3.25
Induction
Definition 3.3.26
Induction Bar
Definition 3.3.27, A.3.3.27
Inert Gas
Definition 3.3.28
Informational References ..... Annex J
Intermediate Bulk Containers (IBCs) for Powders ..... Chap. 16
Conductive Intermediate Bulk Containers (IBCs) 16.4
Flexible Intermediate Bulk Containers (FIBCs) 16.6
Charge Generation 16.6.2
Description 16.6.1
Liners for Flexible Intermediate Bulk Containers. (Reserved) 16.6.8
Type A FIBCs 16.6.4
Type B FIBCs 16.6.5
Type C FIBCs 16.6.6
Type D FIBCs 16.6.7
Types of FIBCs and Their Inner Liners 16.6.3
General 16.1
Granular Material 16.3
Nonconductive Intermediate Bulk Containers (IBCs) 16.5
Types of Discharge 16.2
Ionization
Definition 3.3.29

-L-

Listed
Definition 3.2.3, A.3.2.3

-M-

Megohmeter
Definition 3.3.30
Minimum Explosible Concentration (MEC)
Definition 3.3.31
Miscellaneous Applications ..... Chap. 18
Belts and Conveyors 18.2
Conveyor Belts 18.2.4
Flat Belts 18.2.2
General 18.2.1
Maintenance of Belts and Conveyors 18.2.6
Pulleys and Shafts 18.2.5
V Belts 18.2.3, A.18.2.3
Cathode Ray Tube Video Display Terminals 18.4
Explosives 18.3
Plastic Sheets and Wraps 18.5
Spray Application Processes 18.1

-N-

Nonconductor (Insulator)
Definition 3.3.32

-O-

Ohms per Square
Definition 3.3.33

Copyright 2014 National Fire Protection Association (NFPA). Licensed, by agreement, for individual use and download on October 4, 2014 to LEADER and READER for designated user PATTARAPORN SRITRAKOOL. No other reproduction or transmission in any form permitted without written permission of NFPA. For inquires or to report unauthorized use, contact licensing@nfpa.org.

-P-

Physical Characteristics of Materials ..... Annex B
Powders and Dusts ..... Chap. 15
Bulk Storage 15.13
Combustibility of Dust Clouds 15.2
Discharges During Filling Operations 15.6, A.15.6
Discharges in Powder Operations 15.5
Bulking Brush Discharge (Cone Discharge) 15.5.4
Corona and Brush Discharge 15.5.2
Lightning-Like Discharges 15.5.5
Propagating Brush Discharge 15.5.3
Spark Discharge 15.5.1
Fabric Filters 15.10
Flexible Boots and Socks 15.9
Flexible Hose 15.8, A.15.8
General 15.1
Hybrid Mixtures 15.11, A.15.11
Manual Addition of Powders to Flammable Liquids 15.12, A.15.12
Mechanisms of Static Electric Charging 15.3
Pneumatic Transport Systems 15.7
Retention of Static Electric Charge 15.4

-R-

Recommended Means for Providing Bonding and Grounding ..... Annex G
Recommended Practice
Definition 3.2.4
Referenced Publications ..... Chap. 2
General 2.1
NFPA Publications 2.2
Other Publications 2.3
References for Extracts in Recommendations Sections 2.4
Relaxation Time Constant (τ)
Definition 3.3.34
Resistance (R)
Definition 3.3.35
Resistivity
Definition 3.3.36
Surface Resistivity
Definition 3.3.36.1
Volume Resistivity
Definition 3.3.36.2, A.3.3.36.2

-S-

Semiconductive (Static Dissipative)
Definition 3.3.37
Should
Definition 3.2.5
Spark
Definition 3.3.38
Static Electric Discharge
Definition 3.3.39
Static Electricity
Definition 3.3.40
Static Electricity Hazards in Process Vessels ..... Chap. 13
Adding Solids 13.5
Agitation 13.3
General 13.1
Mixing Solids 13.6
Nonconductive Process Vessels 13.7
Procedures for Transfer to Tanks 13.2, A.13.2
Process Vessels with Nonconductive Linings 13.4
Static Electricity Hazards of Liquids in Bulk Storage Tanks and in Tank Vehicles ..... Chap. 12
Loading of Tank Vehicles 12.2
Antistatic Additives 12.2.6
Bottom Filling 12.2.2
Highway Transport 12.2.4
Switch Loading 12.2.3
Top Filling 12.2.1
Unloading of Tank Vehicles 12.2.5
Marine Vessel and Barge Cargo Tanks 12.5
Railroad Tank Cars 12.4
Storage Tanks 12.1
Classification 12.1.2
Coated and Lined Tanks 12.1.11
Gas Agitation 12.1.10
General 12.1.1, A.12.1.1
Grounding 12.1.7
Large Conductive Tanks 12.1.4
Specific Recommendations for Large Conductive Fixed-Roof Tanks 12.1.4.2
Specific Recommendations for Large Conductive Floating-Roof Tanks and Fixed-Roof Tanks with Internal Floating Covers 12.1.4.3, A.12.1.4.3
Summary of Flow Velocities 12.1.4.4
Limitations for Medium-Sized Fixed-Roof Tanks 12.1.6
Medium-Sized Fixed-Roof Conductive Tanks 12.1.5
Additional Flow Velocity and Flow Rate Limitations for Medium-Sized Fixed-Roof Tanks 12.1.5.3
Spark Promoters 12.1.8
Tank Mixers 12.1.9
Tanks Constructed of Nonconductive Materials 12.1.12
Vacuum Trucks 12.3, A.12.3
Static Electricity Hazards of Liquids in Containers and Intermediate Bulk Containers ..... Chap. 11
Cleaning of Containers 11.2, A.11.2
Portable Tanks, Intermediate Bulk Containers (IBCs), and Non-Bulk Containers 11.1
Containers for Sampling 11.1.9
Hand-Held Containers Up to 20 L Capacity 11.1.7
Metal Non-Bulk Containers 11.1.3
Metal Portable Tanks and Metal IBCs 11.1.1
Nonconductive Containers 11.1.8
Nonconductive Portable Tanks and Nonconductive IBCs 11.1.2
Plastic Non-Bulk Containers 11.1.6
Plastic-Lined Metal Non-Bulk Containers 11.1.4
Removable Conductive and Static Dissipative Linings 11.1.5, A.11.1.5
Static Electricity Hazards of Operations in Process Vessels and Tanks ..... Chap. 14
Ancillary Operations (Reserved) 14.6
Clean Gas Flows 14.5
Cleaning Vessels and Tanks 14.3
Internal Grit Blasting 14.3.4
Solvent Washing 14.3.2
Steam Cleaning 14.3.3
Water Washing 14.3.1
Gauging and Sampling 14.2
Gauging 14.2.4
Manual Operations 14.2.2
Materials 14.2.3
Precautions 14.2.1
Waiting Period 14.2.5
General 14.1
Vacuum Cleaning 14.4, A.14.4
Surface Streamer
Definition 3.3.41, A.3.3.41

-T-

Triboelectric Series
Definition 3.3.42, A.3.3.42

-U-

Units and Symbols of Measure ..... Chap. 4
Symbols 4.2
Units (Reserved) 4.1

Copyright 2014 National Fire Protection Association (NFPA). Licensed, by agreement, for individual use and download on October 4, 2014 to LEADER and READER for designated user PATTARAPORN SRITRAKOOL. No other reproduction or transmission in any form permitted without written permission of NFPA. For inquires or to report unauthorized use, contact licensing@nfpa.org.

-W-

Web and Sheet Processes ..... Chap. 17
Control of Static Electricity in Web Processes 17.5
Charging in Web-Handling Operations 17.5.1
Potential Hazards of Charged Webs 17.5.2
Static Charge Control 17.5.3
Conductive Components 17.5.3.1
Nonconductive Webs 17.5.3.2
Personnel 17.5.3.3
General 17.1
Inks and Coatings 17.3
Processes 17.4
Calendaring 17.4.4
Coating 17.4.2
Printing Presses 17.4.1
Ribbon Tacking 17.4.6
Saturating 17.4.3
Web Handling and Converting 17.4.5
Substrates 17.2
Fabrics and Nonwovens 17.2.3
Paper 17.2.1
Plastics 17.2.2

Copyright 2014 National Fire Protection Association (NFPA). Licensed, by agreement, for individual use and download on October 4, 2014 to LEADER and READER for designated user PATTARAPORN SRITRAKOOL. No other reproduction or transmission in any form permitted without written permission of NFPA. For inquires or to report unauthorized use, contact licensing@nfpa.org.

Sequence of Events Leading to Issuance of This NFPA Committee Document

Step 1: Call for Proposals

- Proposed new Document or new edition of an existing Document is entered into one of two yearly revision cycles, and a Call for Proposals is published.

Step 2: Report on Proposals (ROP)

- Committee meets to act on Proposals, to develop its own Proposals, and to prepare its Report.
- Committee votes by written ballot on Proposals. If two-thirds approve, Report goes forward. Lacking two-thirds approval, Report returns to Committee.
- Report on Proposals (ROP) is published for public review and comment.

Step 3: Report on Comments (ROC)

- Committee meets to act on Public Comments to develop its own Comments, and to prepare its report.
- Committee votes by written ballot on Comments. If two-thirds approve, Report goes forward. Lacking two-thirds approval, Report returns to Committee.
- Report on Comments (ROC) is published for public review.

Step 4: Technical Report Session

- "*Notices of intent to make a motion*" are filed, are reviewed, and valid motions are certified for presentation at the Technical Report Session. ("Consent Documents" that have no certified motions bypass the Technical Report Session and proceed to the Standards Council for issuance.)
- NFPA membership meets each June at the Annual Meeting Technical Report Session and acts on Technical Committee Reports (ROP and ROC) for Documents with "certified amending motions."
- Committee(s) vote on any amendments to Report approved at NFPA Annual Membership Meeting.

Step 5: Standards Council Issuance

- Notification of intent to file an appeal to the Standards Council on Association action must be filed within 20 days of the NFPA Annual Membership Meeting.
- Standards Council decides, based on all evidence, whether or not to issue Document or to take other action, including hearing any appeals.

Committee Membership Classifications

The following classifications apply to Technical Committee members and represent their principal interest in the activity of the committee.

M *Manufacturer:* A representative of a maker or marketer of a product, assembly, or system, or portion thereof, that is affected by the standard.

U *User:* A representative of an entity that is subject to the provisions of the standard or that voluntarily uses the standard.

I/M *Installer/Maintainer:* A representative of an entity that is in the business of installing or maintaining a product, assembly, or system affected by the standard.

L *Labor:* A labor representative or employee concerned with safety in the workplace.

R/T *Applied Research/Testing Laboratory:* A representative of an independent testing laboratory or independent applied research organization that promulgates and/or enforces standards.

E *Enforcing Authority:* A representative of an agency or an organization that promulgates and/or enforces standards.

I *Insurance:* A representative of an insurance company, broker, agent, bureau, or inspection agency.

C *Consumer:* A person who is, or represents, the ultimate purchaser of a product, system, or service affected by the standard, but who is not included in the *User* classification.

SE *Special Expert:* A person not representing any of the previous classifications, but who has a special expertise in the scope of the standard or portion thereof.

NOTES:
1. "Standard" connotes code, standard, recommended practice, or guide.
2. A representative includes an employee.
3. While these classifications will be used by the Standards Council to achieve a balance for Technical Committees, the Standards Council may determine that new classifications of members or unique interests need representation in order to foster the best possible committee deliberations on any project. In this connection, the Standards Council may make appointments as it deems appropriate in the public interest, such as the classification of "Utilities" in the National Electrical Code Committee.
4. Representatives of subsidiaries of any group are generally considered to have the same classification as the parent organization.

Copyright 2014 National Fire Protection Association (NFPA). Licensed, by agreement, for individual use and download on October 4, 2014 to LEADER and READER for designated user PATTARAPORN SRITRAKOOL. No other reproduction or transmission in any form permitted without written permission of NFPA. For inquires or to report unauthorized use, contact licensing@nfpa.org.

Submitting Public Input / Public Comment through the Electronic Submission System (e-Submission):

As soon as the current edition is published, a Standard is open for Public Input.

Before accessing the e-Submission System, you must first sign-in at www.NFPA.org. *Note: You will be asked to sign-in or create a free online account with NFPA before using this system*:

a. Click in the gray Sign In box on the upper left side of the page. Once signed-in, you will see a red "Welcome" message in the top right corner.
b. Under the Codes and Standards heading, Click on the Document Information pages (List of Codes & Standards), and then select your document from the list or use one of the search features in the upper right gray box.

OR

a. Go directly to your specific document page by typing the convenient short link of www.nfpa.org/document#, (Example: NFPA 921 would be www.nfpa.org/921) Click in the gray Sign In box on the upper left side of the page. Once signed in, you will see a red "Welcome" message in the top right corner.

To begin your Public Input, select the link The next edition of this standard is now open for Public Input (formally "proposals") located on the Document Information tab, the Next Edition tab, or the right-hand Navigation bar. Alternatively, the Next Edition tab includes a link to Submit Public Input online

At this point, the NFPA Standards Development Site will open showing details for the document you have selected. This "Document Home" page site includes an explanatory introduction, information on the current document phase and closing date, a left-hand navigation panel that includes useful links, a document Table of Contents, and icons at the top you can click for Help when using the site. The Help icons and navigation panel will be visible except when you are actually in the process of creating a Public Input.

Once the First Draft Report becomes available there is a Public comment period during which anyone may submit a Public Comment on the First Draft. Any objections or further related changes to the content of the First Draft must be submitted at the Comment stage.

To submit a Public Comment you may access the e-Submission System utilizing the same steps as previous explained for the submission of Public Input.

For further information on submitting public input and public comments, go to: http://www.nfpa.org/publicinput

Other Resources available on the Doc Info Pages

Document information tab: Research current and previous edition information on a Standard

Next edition tab: Follow the committee's progress in the processing of a Standard in its next revision cycle.

Technical committee tab: View current committee member rosters or apply to a committee

Technical questions tab: For members and Public Sector Officials/AHJs to submit questions about codes and standards to NFPA staff. Our Technical Questions Service provides a convenient way to receive timely and consistent technical assistance when you need to know more about NFPA codes and standards relevant to your work. Responses are provided by NFPA staff on an informal basis.

Products/training tab: List of NFPA's publications and training available for purchase.

Community tab: Information and discussions about a Standard

Copyright 2014 National Fire Protection Association (NFPA). Licensed, by agreement, for individual use and download on October 4, 2014 to LEADER and READER for designated user PATTARAPORN SRITRAKOOL. No other reproduction or transmission in any form permitted without written permission of NFPA. For inquires or to report unauthorized use, contact licensing@nfpa.org.

Information on the NFPA Standards Development Process

I. Applicable Regulations. The primary rules governing the processing of NFPA standards (codes, standards, recommended practices, and guides) are the NFPA *Regulations Governing the Development of NFPA Standards (Regs)*. Other applicable rules include NFPA *Bylaws*, NFPA *Technical Meeting Convention Rules*, NFPA *Guide for the Conduct of Participants in the NFPA Standards Development Process*, and the NFPA *Regulations Governing Petitions to the Board of Directors from Decisions of the Standards Council*. Most of these rules and regulations are contained in the *NFPA Standards Directory*. For copies of the *Directory*, contact Codes and Standards Administration at NFPA Headquarters; all these documents are also available on the NFPA website at "www.nfpa.org."

The following is general information on the NFPA process. All participants, however, should refer to the actual rules and regulations for a full understanding of this process and for the criteria that govern participation.

II. Technical Committee Report. The Technical Committee Report is defined as "the Report of the responsible Committee(s), in accordance with the Regulations, in preparation of a new or revised NFPA Standard." The Technical Committee Report is in two parts and consists of the First Draft Report and the Second Draft Report. (See *Regs* at 1.4)

III. Step 1: First Draft Report. The First Draft Report is defined as "Part one of the Technical Committee Report, which documents the Input Stage." The First Draft Report consists of the First Draft, Public Input, Committee Input, Committee and Correlating Committee Statements, Correlating Input, Correlating Notes, and Ballot Statements. (See *Regs* at 4.2.5.2 and Section 4.3) Any objection to an action in the First Draft Report must be raised through the filing of an appropriate Comment for consideration in the Second Draft Report or the objection will be considered resolved. [See *Regs* at 4.3.1(b)]

IV. Step 2: Second Draft Report. The Second Draft Report is defined as "Part two of the Technical Committee Report, which documents the Comment Stage." The Second Draft Report consists of the Second Draft, Public Comments with corresponding Committee Actions and Committee Statements, Correlating Notes and their respective Committee Statements, Committee Comments, Correlating Revisions, and Ballot Statements. (See *Regs* at Section 4.2.5.2 and 4.4) The First Draft Report and the Second Draft Report together constitute the Technical Committee Report. Any outstanding objection following the Second Draft Report must be raised through an appropriate Amending Motion at the Association Technical Meeting or the objection will be considered resolved. [See *Regs* at 4.4.1(b)]

V. Step 3a: Action at Association Technical Meeting. Following the publication of the Second Draft Report, there is a period during which those wishing to make proper Amending Motions on the Technical Committee Reports must signal their intention by submitting a Notice of Intent to Make a Motion. (See *Regs* at 4.5.2) Standards that receive notice of proper Amending Motions (Certified Amending Motions) will be presented for action at the annual June Association Technical Meeting. At the meeting, the NFPA membership can consider and act on these Certified Amending Motions as well as Follow-up Amending Motions, that is, motions that become necessary as a result of a previous successful Amending Motion. (See 4.5.3.2 through 4.5.3.6 and Table1, Columns 1-3 of *Regs* for a summary of the available Amending Motions and who may make them.) Any outstanding objection following action at an Association Technical Meeting (and any further Technical Committee consideration following successful Amending Motions, see *Regs* at 4.5.3.7 through 4.6.5.3) must be raised through an appeal to the Standards Council or it will be considered to be resolved.

VI. Step 3b: Documents Forwarded Directly to the Council. Where no Notice of Intent to Make a Motion (NITMAM) is received and certified in accordance with the Technical Meeting Convention Rules, the standard is forwarded directly to the Standards Council for action on issuance. Objections are deemed to be resolved for these documents. (See *Regs* at 4.5.2.5)

VII. Step 4a: Council Appeals. Anyone can appeal to the Standards Council concerning procedural or substantive matters related to the development, content, or issuance of any document of the Association or on matters within the purview of the authority of the Council, as established by the *Bylaws* and as determined by the Board of Directors. Such appeals must be in written form and filed with the Secretary of the Standards Council (See *Regs* at 1.6). Time constraints for filing an appeal must be in accordance with 1.6.2 of the *Regs*. Objections are deemed to be resolved if not pursued at this level.

VIII. Step 4b: Document Issuance. The Standards Council is the issuer of all documents (see Article 8 of *Bylaws*). The Council acts on the issuance of a document presented for action at an Association Technical Meeting within 75 days from the date of the recommendation from the Association Technical Meeting, unless this period is extended by the Council (See *Regs at* 4.7.2). For documents forwarded directly to the Standards Council, the Council acts on the issuance of the document at its next scheduled meeting, or at such other meeting as the Council may determine (See *Regs* at 4.5.2.5 and 4.7.4).

IX. Petitions to the Board of Directors. The Standards Council has been delegated the responsibility for the administration of the codes and standards development process and the issuance of documents. However, where extraordinary circumstances requiring the intervention of the Board of Directors exist, the Board of Directors may take any action necessary to fulfill its obligations to preserve the integrity of the codes and standards development process and to protect the interests of the Association. The rules for petitioning the Board of Directors can be found in the *Regulations Governing Petitions to the Board of Directors from Decisions of the Standards Council* and in 1.7 of the *Regs*.

X. For More Information. The program for the Association Technical Meeting (as well as the NFPA website as information becomes available) should be consulted for the date on which each report scheduled for consideration at the meeting will be presented. For copies of the First Draft Report and Second Draft Report as well as more information on NFPA rules and for up-to-date information on schedules and deadlines for processing NFPA documents, check the NFPA website (www.nfpa.org/aboutthecodes) or contact NFPA Codes & Standards Administration at (617) 984-7246.

Copyright 2014 National Fire Protection Association (NFPA). Licensed, by agreement, for individual use and download on October 4, 2014 to LEADER and READER for designated user PATTARAPORN SRITRAKOOL. No other reproduction or transmission in any form permitted without written permission of NFPA. For inquires or to report unauthorized use, contact licensing@nfpa.org.

Stay Up-To-Date. Join NFPA® Today!

☑ **YES** Please enroll me as a member of NFPA for the term checked below. Activate all benefits, and ship my *Member Kit* including the *Benefits Guide* and other resources to help me make the most of my NFPA membership.

Please allow three to four weeks for the kit to arrive.

Billing Information:

Name _____ Title _____

Organization _____

Address _____

City _____ State _____ Zip/Postal Code _____

Country _____

Phone _____ E-mail _____

Priority Code: 8J-MIS-1Z

Please Answer The Following Questions:

Job Title *(check one)*

- ❑ Architect, Engineer, Consultant, Contractor (C17)
- ❑ Facilities Safety Officer (F14)
- ❑ Fire Chief, Other Fire Service (A11)
- ❑ Loss Control, Risk Manager (L11)
- ❑ Inspector, Building Official, Fire Marshal (F03)
- ❑ Owner, President, Manager, Administrator (C10)
- ❑ Other (please specify): (G11)_____

Type of Organization *(check one)*

- ❑ Architecture, Engineering, Contracting (A14)
- ❑ Commercial Firm (Office, Retail, Lodging, Restaurant) (G13)
- ❑ Electrical Services, Installation (J11)
- ❑ Fire Service, Public and Private (AA1)
- ❑ Government (C12)
- ❑ Industrial Firm (Factory, Warehouse) (C11)
- ❑ Institutional (Health Care, Education, Detention, Museums) (B11)
- ❑ Insurance, Risk Management (B12)
- ❑ Utilities (G12)
- ❑ Other (please specify): (G11)_____

4 Easy Ways to Join

Fax: 1-800-593-6372, Outside the U.S. +1-508-895-8301
Mail: NFPA Membership Services Center,
11 Tracy Drive, Avon, MA 02322-9908
Online: nfpa.org
Call: 1-800-344-3555
Outside the U.S. call +1-617-770-3000

05/13-D

Terms and Payment:

- ❑ 1 year ($165)
- ❑ 2 years ($300) SAVE $30
- ❑ 3 years ($430) SAVE $65

Annual membership dues include a $45 subscription to *NFPA Journal*®. Regular membership in NFPA is individual and non-transferable. NFPA Journal is a registered trademark of the National Fire Protection Association, Quincy, MA 02169. Voting privileges begin after 180 days of individual membership. Prices subject to change.

Payment Method:

Check One:

- ❑ Payment Enclosed *(Make check payable to NFPA.)*
- ❑ Purchase Order *(Please attach this form to your P.O.)*
- ❑ Bill Me Later *(Not available on International memberships.)*

Charge My: ❑ VISA ❑ MasterCard ❑ AmEx ❑ Discover

Card #_____

Expiration Date _____

Name on Card _____

Signature _____

International members: Please note prepayment is required on all International orders. Be sure to enclose a check or select your preferred credit card option.

100% Money-Back Guarantee

If anytime during your first year you decide membership is not for you, let us know and you'll receive a 100% refund of your dues.

Copyright 2014 National Fire Protection Association (NFPA). Licensed, by agreement, for individual use and download on October 4, 2014 to LEADER and READER for designated user PATTARAPORN SRITRAKOOL. No other reproduction or transmission in any form permitted without written permission of NFPA. For inquires or to report unauthorized use, contact licensing@nfpa.org.

"Member-Only" Benefits
Keeps You Up-To-Date!

FREE! Technical Support — Technical Support by Phone/Email. Get fast, reliable answers to all code-related questions—from electrical safety for employee workplaces to carbon dioxide extinguishing systems—from NFPA's team of fire protection specialists.

NFPA Journal® — THE journal of record for fire protection, this bi-monthly publication will keep you abreast of the latest fire prevention and safety practices, as well as new technologies and strategies for protecting life and property from fire.

NFPA Update — This easy-to-read monthly e-newsletter will keep you up-to-date on important association programs such as the annual meeting; bring you times of interest from NFPA's regional offices; and alert you to nationwide events and opportunities you won't want to miss.

NFPA News — From new standards for dry cleaning plants to warning equipment for household carbon monoxide, this monthly online update keeps you abreast of additions of changes that could impact how you do you work.

NFPA Standards Directory — The NFPA Standards Directory is your complete guide to NFPA's code-making process. Simply access your online NFPA member profile for document revision guidelines, the revision cycle schedule, and forms for submitting Proposals and Comments. Your online NFPA member profile and access to the NFPA Standards Directory is automatically generated once you join NFPA.

FREE! Section Membership — Share YOUR expertise with others in any of 16 industry-specific sections covering your own field of interest.

Member Kit — Includes Membership Certificate, Pin, Decals, ID Card, and Camera-ready Logo Art. Display the NFPA member logo proudly on your business correspondence, literature, website, and vehicles.

10% Discounts — Save hundreds of dollars each year on the many products and services listed in the NFPA Catalog, including codes and standards publications, handbooks, training videos, and other education materials to increase your knowledge and skills.

Voting Rights — Your chance to help shape the future direction of fire prevention codes and standards. Voting rights go into effect 180 days from the start of individual membership.

Conference Invitation— Invitation to the NFPA Conference and Expo. Attend this important meeting at discounted rates as a member of NFPA.

Join NFPA today!
www.nfpa.org

NFPA® and *NFPA Journal*® are registered trademarks of the National Fire Protection Association, Quincy, MA 02169-7471