Copyright 2014 National Fire Protection Association (NFPA). Licensed, by agreement, for individual use and download on October 4, 2014 to LEADER and READER for designated user PATTARAPORN SRITRAKOOL. No other reproduction or transmission in any form permitted without written permission of NFPA. For inquires or to report unauthorized use, contact licensing@nfpa.org.

NFPA® 69

Standard on Explosion Prevention Systems

2014 Edition



NFPA, 1 Batterymarch Park, Quincy, MA 02169-7471
An International Codes and Standards Organization

Copyright 2014 National Fire Protection Association (NFPA). Licensed, by agreement, for individual use and download on October 4, 2014 to LEADER and READER for designated user PATTARAPORN SRITRAKOOL. No other reproduction or transmission in any form permitted without written permission of NFPA. For inquires or to report unauthorized use, contact licensing@nfpa.org.

IMPORTANT NOTICES AND DISCLAIMERS CONCERNING NFPA® DOCUMENTS
NOTICE AND DISCLAIMER OF LIABILITY CONCERNING THE USE OF NFPA DOCUMENTS

NFPA® codes, standards, recommended practices, and guides ("NFPA Documents"), of which the document contained herein is one, are developed through a consensus standards development process approved by the American National Standards Institute. This process brings together volunteers representing varied viewpoints and interests to achieve consensus on fire and other safety issues. While the NFPA administers the process and establishes rules to promote fairness in the development of consensus, it does not independently test, evaluate, or verify the accuracy of any information or the soundness of any judgments contained in NFPA Documents.

The NFPA disclaims liability for any personal injury, property or other damages of any nature whatsoever, whether special, indirect, consequential or compensatory, directly or indirectly resulting from the publication, use of, or reliance on NFPA Documents. The NFPA also makes no guaranty or warranty as to the accuracy or completeness of any information published herein.

In issuing and making NFPA Documents available, the NFPA is not undertaking to render professional or other services for or on behalf of any person or entity. Nor is the NFPA undertaking to perform any duty owed by any person or entity to someone else. Anyone using this document should rely on his or her own independent judgment or, as appropriate, seek the advice of a competent professional in determining the exercise of reasonable care in any given circumstances.

The NFPA has no power, nor does it undertake, to police or enforce compliance with the contents of NFPA Documents. Nor does the NFPA list, certify, test, or inspect products, designs, or installations for compliance with this document. Any certification or other statement of compliance with the requirements of this document shall not be attributable to the NFPA and is solely the responsibility of the certifier or maker of the statement.

REMINDER: UPDATING OF NFPA DOCUMENTS

Users of NFPA codes, standards, recommended practices, and guides ("NFPA Documents") should be aware that NFPA Documents may be amended from time to time through the issuance of Tentative Interim Amendments or corrected by Errata. An official NFPA Document at any point in time consists of the current edition of the document together with any Tentative Interim Amendment and any Errata then in effect.

In order to determine whether an NFPA Document has been amended through the issuance of Tentative Interim Amendments or corrected by Errata, visit the Document Information Pages on NFPA's website. The Document Information Pages provide up-to-date, document specific information including any issued Tentative Interim Amendments and Errata.

To access the Document Information Page for a specific NFPA Document go to http://www.nfpa.org/document for a list of NFPA Documents, and click on the appropriate Document number (e.g., NFPA 101). In addition to posting all existing Tentative Interim Amendments and Errata, the Document Information Page also includes the option to sign-up for an "Alert" feature to receive an email notification when new updates and other information are posted regarding the document.

ISBN: 978-145590847-9 (Print)
ISBN: 978-145590858-5 (PDF)

Copyright 2014 National Fire Protection Association (NFPA). Licensed, by agreement, for individual use and download on October 4, 2014 to LEADER and READER for designated user PATTARAPORN SRITRAKOOL. No other reproduction or transmission in any form permitted without written permission of NFPA. For inquires or to report unauthorized use, contact licensing@nfpa.org.

IMPORTANT NOTICES AND DISCLAIMERS CONCERNING NFPA® DOCUMENTS

ADDITIONAL NOTICES AND DISCLAIMERS

Updating of NFPA Documents

Users of NFPA codes, standards, recommended practices, and guides ("NFPA Documents") should be aware that these documents may be superseded at any time by the issuance of new editions or may be amended from time to time through the issuance of Tentative Interim Amendments. An official NFPA Document at any point in time consists of the current edition of the document together with any Tentative Interim Amendments and any Errata then in effect. In order to determine whether a given document is the current edition and whether it has been amended through the issuance of Tentative Interim Amendments or corrected through the issuance of Errata, consult appropriate NFPA publications such as the National Fire Codes® Subscription Service, visit the NFPA website at www.nfpa.org, or contact the NFPA at the address listed below.

Interpretations of NFPA Documents

A statement, written or oral, that is not processed in accordance with Section 6 of the Regulations Governing Committee Projects shall not be considered the official position of NFPA or any of its Committees and shall not be considered to be, nor be relied upon as, a Formal Interpretation.

Patents

The NFPA does not take any position with respect to the validity of any patent rights referenced in, related to, or asserted in connection with an NFPA Document. The users of NFPA Documents bear the sole responsibility for determining the validity of any such patent rights, as well as the risk of infringement of such rights, and the NFPA disclaims liability for the infringement of any patent resulting from the use of or reliance on NFPA Documents.

NFPA adheres to the policy of the American National Standards Institute (ANSI) regarding the inclusion of patents in American National Standards ("the ANSI Patent Policy"), and hereby gives the following notice pursuant to that policy:

NOTICE: The user's attention is called to the possibility that compliance with an NFPA Document may require use of an invention covered by patent rights. NFPA takes no position as to the validity of any such patent rights or as to whether such patent rights constitute or include essential patent claims under the ANSI Patent Policy. If, in connection with the ANSI Patent Policy, a patent holder has filed a statement of willingness to grant licenses under these rights on reasonable and nondiscriminatory terms and conditions to applicants desiring to obtain such a license, copies of such filed statements can be obtained, on request, from NFPA. For further information, contact the NFPA at the address listed below.

Law and Regulations

Users of NFPA Documents should consult applicable federal, state, and local laws and regulations. NFPA does not, by the publication of its codes, standards, recommended practices, and guides, intend to urge action that is not in compliance with applicable laws, and these documents may not be construed as doing so.

Copyrights

NFPA Documents are copyrighted. They are made available for a wide variety of both public and private uses. These include both use, by reference, in laws and regulations, and use in private self-regulation, standardization, and the promotion of safe practices and methods. By making these documents available for use and adoption by public authorities and private users, the NFPA does not waive any rights in copyright to these documents.

Use of NFPA Documents for regulatory purposes should be accomplished through adoption by reference. The term "adoption by reference" means the citing of title, edition, and publishing information only. Any deletions, additions, and changes desired by the adopting authority should be noted separately in the adopting instrument. In order to assist NFPA in following the uses made of its documents, adopting authorities are requested to notify the NFPA (Attention: Secretary, Standards Council) in writing of such use. For technical assistance and questions concerning adoption of NFPA Documents, contact NFPA at the address below.

For Further Information

All questions or other communications relating to NFPA Documents and all requests for information on NFPA procedures governing its codes and standards development process, including information on the procedures for requesting Formal Interpretations, for proposing Tentative Interim Amendments, and for proposing revisions to NFPA documents during regular revision cycles, should be sent to NFPA headquarters, addressed to the attention of the Secretary, Standards Council, NFPA, 1 Batterymarch Park, P.O. Box 9101, Quincy, MA 02269-9101; email: stds_admin@nfpa.org

For more information about NFPA, visit the NFPA website at www.nfpa.org.

Copyright 2014 National Fire Protection Association (NFPA). Licensed, by agreement, for individual use and download on October 4, 2014 to LEADER and READER for designated user PATTARAPORN SRITRAKOOL. No other reproduction or transmission in any form permitted without written permission of NFPA. For inquires or to report unauthorized use, contact licensing@nfpa.org.

Copyright © 2013 National Fire Protection Association®. All Rights Reserved.

NFPA® 69

Standard on

Explosion Prevention Systems

2014 Edition

This edition of NFPA 69, *Standard on Explosion Prevention Systems*, was prepared by the Technical Committee on Explosion Protection Systems. It was issued by the Standards Council on November 12, 2013, with an effective date of December 2, 2013, and supersedes all previous editions.

This edition of NFPA 69 was approved as an American National Standard on December 2, 2013.

Origin and Development of NFPA 69

In 1965, an NFPA Committee was appointed to develop standards for explosion protection systems. These standards included information on inerting to prevent explosions and on venting to minimize damage from an explosion.

A tentative draft on explosion prevention systems was presented at the NFPA Annual Meeting in New York City in May 1969. This tentative document was officially adopted in May 1970. NFPA 69 was revised in 1973 and reconfirmed in 1978.

In 1982, the Committee on Explosion Protection Systems began a thorough review of NFPA 69, including the development of a chapter on the technique of deflagration pressure containment. The results of that effort became the 1986 edition.

The 1992 edition of NFPA 69 incorporated a new chapter on deflagration isolation systems. Partial amendments were made to refine definitions, improve descriptions of oxidant concentration reduction techniques, improve material on deflagration suppression, and fine-tune deflagration pressure containment material.

The 1997 edition of this standard included some reorganization and updating of the technical material to improve its usability. New material was added on enrichment to operate above the upper flammable limit as a means of explosion protection with minimum oxidant concentrations for preventing explosions. Material was added for provisions on reliability of explosion protection control systems and deflagration suppression systems for consistency with other NFPA standards.

The 2002 edition of NFPA 69 included new information on spark detection and extinguishment system design. A reorganization of the protection methods reflected a hierarchy based on the degree of explosion prevention. The limiting oxidant concentration values for gases and vapors in Annex C were updated based on recent research. The standard was revised to reflect the requirements of the *Manual of Style for NFPA Technical Committee Documents*.

The 2008 edition incorporated a comprehensive revision to the standard that included a performance-based option in addition to the existing specification methods for explosion prevention. This revision included new requirements for detection and ignition control, suppression, and active and passive isolation. The Committee also added a chapter on passive suppression using expanded metal mesh or polymer foams. A new chapter on installation, inspection, and maintenance addressed the concept of safety integrity and reliability. New definitions supporting the expanded requirements were added and existing definitions were updated to conform to the NFPA Glossary of Terms.

The 2014 edition has been revised and updated to improve the overall clarity and use of the document. Design requirements for flow-actuated flap valves and a new annex, Deflagration Containment Calculation Method for Two Interconnected Vessels, have been incorporated. The operating safety margins for oxidant concentration control have also been modified, in order to remove discontinuity. In addition, the use of the term *commissioning* has been updated throughout the document for compatibility with NFPA 3, *Recommended Practice for Commissioning and Integrated Testing of Fire Protection and Life Safety Systems*.

NFPA and National Fire Protection Association are registered trademarks of the National Fire Protection Association, Quincy, Massachusetts 02169.

Copyright 2014 National Fire Protection Association (NFPA). Licensed, by agreement, for individual use and download on October 4, 2014 to LEADER and READER for designated user PATTARAPORN SRITRAKOOL. No other reproduction or transmission in any form permitted without written permission of NFPA. For inquires or to report unauthorized use, contact licensing@nfpa.org.

Technical Committee on Explosion Protection Systems

Samuel A. Rodgers, *Chair*
Honeywell, Inc., VA [U]

Luke S. Morrison, *Secretary*
Professional Loss Control Inc., Canada [SE]

Venkateswara Sarma Bhamidipati, Powder Process Solutions, MN [IM]
Michael Davies, PROTEGO, Germany [M]
Todd A. Dillon, XL Global Asset Protection Services, OH [I]
Alexi I. Dimopoulos, ExxonMobil Corporation, VA [U]
Rep. American Petroleum Institute
Henry L. Febo, Jr., FM Global, MA [I]
Robert J. Feldkamp, Nordson Corporation, OH [M]
Larry D. Floyd, BASF, AL [U]
Joseph P. Gillis, Westboro, MA [SE]
Stanley S. Grossel, Process Safety & Design Consultant, NJ [SE]
Dan A. Guaricci, ATEX Explosion Protection, L.P., FL [M]
Michael D. Hard, Hard Fire Suppression Systems, Inc., OH [IM]
Rep. Fire Suppression Systems Association
David D. Herrmann, E. I. DuPont de Nemours & Company, DE [U]
Alfonso F. Ibarreta, Exponent, Inc., MA [SE]
Eric R. Johnson, Savannah River Nuclear Solutions, LLC, SC [U]
David C. Kirby, Baker Engineering & Risk Consultants, Inc., WV [SE]
Steven A. McCoy, Ingredion, IN [U]
Rep. NFPA Industrial Fire Protection Section
James O. Paavola, DTE Energy/Detroit Edison Company, MI [U]
Stefan Penno, Rembe GmbH Safety & Control, Germany [M]
Mitchel L. Rooker, BS&B Safety Systems, LLC, OK [M]
Joseph A. Senecal, UTC/Kidde-Fenwal, Inc., MA [M]
Cleveland B. Skinker, Bechtel Power Corporation, MD [SE]
Bill Stevenson, CV Technology, Inc., FL [M]
David R. Stottmann, ST Storage, KS [M]
Stephen M. Stuart, Hylant Group, MI [I]
Jerome R. Taveau, Fike Corporation, MO [M]
Erdem A. Ural, Loss Prevention Science & Technologies, Inc., MA [SE]
Robert G. Zalosh, Firexplo, MA [SE]

Alternates

Geof Brazier, BS&B Safety Systems, LLC, OK [M]
(Alt. to M. L. Rooker)
Martin P. Clouthier, Professional Loss Control Inc., Canada [SE]
(Alt. to L. S. Morrison)
Randal R. Davis, UTC/Kidde-Fenwal, Inc., MA [M]
(Alt. to J. A. Senecal)
Paul F. Hart, XL Global Asset Protection Services, IL [I]
(Alt. to T. A. Dillon)
Kirk W. Humbrecht, Phoenix Fire Systems, Inc., IL [IM]
(Alt. to M. D. Hard)
Edward L. Jones, Nordson Corporation, OH [M]
(Alt. to R. J. Feldkamp)
Jason Krbec, CV Technology, Inc., FL [M]
(Alt. to B. Stevenson)
John A. LeBlanc, FM Global, MA [I]
(Alt. to H. L. Febo, Jr.)
Gerd Ph. Mayer, Rembe, Inc., NC [M]
(Alt. to S. Penno)
Keith McGuire, CST Storage, KS [M]
(Alt. to D. R. Stottmann)
Timothy J. Myers, Exponent, Inc., MA [SE]
(Alt. to A. F. Ibarreta)
Thomas C. Scherpa, The DuPont Company, Inc., NH [U]
(Alt. to D. D. Herrmann)
Jef Snoeys, Fike Corporation, Belgium [M]
(Alt. to J. R. Taveau)
James Kelly Thomas, Baker Engineering & Risk Consultants, Inc., TX [SE]
(Alt. to D. C. Kirby)
William B. Till, Jr., Savannah River Nuclear Solutions, LLC, SC [U]
(Alt. to E. R. Johnson)

Nonvoting

Franz Alfert, Inburex Consulting, Germany [SE]
Laurence G. Britton, Process Safety Consultant, WV [SE]
Vladimir Molkov, University of Ulster, Northern Ireland, UK [SE]
Harry Verakis, U.S. Department of Labor, WV [E]
Richard F. Schwab, Basking Ridge, NJ [SE]
(Member Emeritus)

Barry D. Chase, NFPA Staff Liaison

This list represents the membership at the time the Committee was balloted on the final text of this edition. Since that time, changes in the membership may have occurred. A key to classifications is found at the back of the document.

NOTE: Membership on a committee shall not in and of itself constitute an endorsement of the Association or any document developed by the committee on which the member serves.

Committee Scope: This Committee shall have primary responsibility for documents on explosion protection systems for all types of equipment and for buildings, except pressure venting devices designed to protect against overpressure of vessels such as those containing flammable liquids, liquefied gases, and compressed gases under fire exposure conditions, as now covered in existing NFPA standards.

Copyright 2014 National Fire Protection Association (NFPA). Licensed, by agreement, for individual use and download on October 4, 2014 to LEADER and READER for designated user PATTARAPORN SRITRAKOOL. No other reproduction or transmission in any form permitted without written permission of NFPA. For inquires or to report unauthorized use, contact licensing@nfpa.org.

Contents

Chapter 1 Administration 69– 5
1.1 Scope 69– 5
1.2 Purpose 69– 5
1.3 Application 69– 5
1.4 Retroactivity 69– 6
1.5 Equivalency 69– 6

Chapter 2 Referenced Publications 69– 6
2.1 General 69– 6
2.2 NFPA Publications 69– 6
2.3 Other Publications 69– 6
2.4 References for Extracts in Mandatory Sections 69– 7

Chapter 3 Definitions 69– 7
3.1 General 69– 7
3.2 NFPA Official Definitions 69– 7
3.3 General Definitions 69– 7

Chapter 4 General Requirements 69– 8
4.1 Goal 69– 8
4.2 Objectives 69– 9
4.3 Compliance Options 69– 9

Chapter 5 Performance-Based Design Option 69– 9
5.1 General Requirements 69– 9
5.2 Performance Criteria 69– 9

Chapter 6 General Prescriptive Requirements 69– 9
6.1 Methods 69– 9
6.2 Limitations 69– 9
6.3 Factors to Be Considered 69–10
6.4 Plans 69–10
6.5 System Acceptance 69–10
6.6 Inspection and Maintenance 69–10
6.7 Housekeeping 69–10

Chapter 7 Deflagration Prevention by Oxidant Concentration Reduction 69–10
7.1 Application 69–10
7.2 Design and Operating Requirements 69–10
7.3 Purge Gas Sources 69–11
7.4 Purge Gas Conditioning 69–11
7.5 Piping Systems 69–12
7.6 Application of Purge Gas at Points of Use 69–12
7.7 Instrumentation 69–12

Chapter 8 Deflagration Prevention by Combustible Concentration Reduction 69–13
8.1 Application 69–13
8.2 Basic Design Considerations 69–13
8.3 Design and Operating Requirements 69–13
8.4 Instrumentation 69–13

Chapter 9 Predeflagration Detection and Control of Ignition Sources 69–14
9.1 Application 69–14
9.2 Limitations 69–14
9.3 Optical Sensing System and Gas Sensing System Design Considerations 69–14
9.4 Testing 69–15
9.5 Protection System Design and Operation 69–15
9.6 System Manufacturer's Additional Responsibilities 69–15
9.7 Actuation of Other Devices and Systems 69–15
9.8 Process Shutdown 69–15

Chapter 10 Deflagration Control by Suppression 69–15
10.1 Application 69–15
10.2 Limitations 69–16
10.3 Personnel Safety 69–16
10.4 Basic Design Considerations 69–16
10.5 Control Panels 69–17
10.6 Detection Devices 69–18
10.7 Electrically Operated Actuating Devices 69–18
10.8 Suppressant and Suppressant Storage Containers 69–18

Chapter 11 Deflagration Control by Active Isolation 69–18
11.1 Application 69–18
11.2 Isolation Techniques 69–18
11.3 Personnel Safety 69–20
11.4 Basic Design and Operation 69–20
11.5 Detection Devices 69–21
11.6 Electrically Operated Actuating Devices 69–22
11.7 Control Panels 69–22

Chapter 12 Deflagration Control by Passive Isolation 69–22
12.1 Application 69–22
12.2 Passive Isolation Techniques 69–22

Chapter 13 Deflagration Control by Pressure Containment 69–28
13.1 Application 69–28
13.2 Design Limitations 69–28
13.3 Design Bases 69–28
13.4 Maintenance 69–29
13.5 Threaded Fasteners 69–30
13.6 Inspection After a Deflagration 69–30

Copyright 2014 National Fire Protection Association (NFPA). Licensed, by agreement, for individual use and download on October 4, 2014 to LEADER and READER for designated user PATTARAPORN SRITRAKOOL. No other reproduction or transmission in any form permitted without written permission of NFPA. For inquires or to report unauthorized use, contact licensing@nfpa.org.

Chapter 14 Passive Explosion Suppression Using Expanded Metal Mesh or Polymer Foams **69**–30
14.1 Applications **69**–30
14.2 Foam and Mesh Requirements **69**–30
14.3 Expanded Metal Mesh and Polymer Foam Explosion Suppression Testing **69**–31
14.4 Expanded Metal Mesh or Polymer Foam Installations **69**–31
14.5 Expanded Metal Mesh or Polymer Foam Maintenance and Replacement **69**–32

Chapter 15 Installation, Inspection, and Maintenance of Explosion Prevention Systems **69**–32
15.1 General **69**–32
15.2 Installation **69**–32
15.3 Mechanical Installation **69**–32
15.4 Agent, Agent Storage Containers, Automatic Fast-Acting Valves, Flame Arresters, and Flame Front Diverters **69**–32
15.5 Electrical Installation **69**–33
15.6 System Acceptance **69**–33
15.7 Inspection **69**–33
15.8 Procedures Following System Actuation **69**–34
15.9 Recordkeeping **69**–34
15.10 Personnel Safety and Training **69**–34
15.11 Management of Change **69**–34
15.12 Maintenance **69**–35

Annex A Explanatory Material **69**–35

Annex B Control of Flammable Gas Mixtures by Oxidant Concentration Reduction and Combustible Concentration Reduction **69**–56

Annex C Limiting Oxidant Concentrations **69**–61

Annex D Ventilation Calculations **69**–64

Annex E Purging Methods **69**–66

Annex F Flame Arresters **69**–68

Annex G Deflagration Containment Calculation Method for Two Interconnected Vessels **69**–73

Annex H Informational References **69**–74

Index **69**–77

Copyright 2014 National Fire Protection Association (NFPA). Licensed, by agreement, for individual use and download on October 4, 2014 to LEADER and READER for designated user PATTARAPORN SRITRAKOOL. No other reproduction or transmission in any form permitted without written permission of NFPA. For inquires or to report unauthorized use, contact licensing@nfpa.org.

NFPA 69

Standard on

Explosion Prevention Systems

2014 Edition

IMPORTANT NOTE: This NFPA document is made available for use subject to important notices and legal disclaimers. These notices and disclaimers appear in all publications containing this document and may be found under the heading "Important Notices and Disclaimers Concerning NFPA Documents." They can also be obtained on request from NFPA or viewed at www.nfpa.org/disclaimers.

NOTICE: An asterisk (*) following the number or letter designating a paragraph indicates that explanatory material on the paragraph can be found in Annex A.

Changes other than editorial are indicated by a vertical rule beside the paragraph, table, or figure in which the change occurred. These rules are included as an aid to the user in identifying changes from the previous edition. Where one or more complete paragraphs have been deleted, the deletion is indicated by a bullet (•) between the paragraphs that remain.

A reference in brackets [ ] following a section or paragraph indicates material that has been extracted from another NFPA document. As an aid to the user, the complete title and edition of the source documents for extracts in mandatory sections of the document are given in Chapter 2 and those for extracts in informational sections are given in Annex H. Extracted text may be edited for consistency and style and may include the revision of internal paragraph references and other references as appropriate. Requests for interpretations or revisions of extracted text shall be sent to the technical committee responsible for the source document.

Information on referenced publications can be found in Chapter 2 and Annex H.

Chapter 1 Administration

1.1 Scope. This standard applies to the design, installation, operation, maintenance, and testing of systems for the prevention of explosions by means of the following methods:

(1) Control of oxidant concentration
(2) Control of combustible concentration
(3) Predeflagration detection and control of ignition sources
(4) Explosion suppression
(5) Active isolation
(6) Passive isolation
(7) Deflagration pressure containment
(8) Passive explosion suppression

1.2 Purpose.

1.2.1 This standard shall cover the minimum requirements for installing systems for the prevention of explosions in enclosures that contain flammable concentrations of flammable gases, vapors, mists, dusts, or hybrid mixtures.

1.2.2 This standard shall provide basic information for design engineers, operating personnel, and authorities having jurisdiction.

1.2.3* To meet a minimum level of reliability, explosion prevention and control systems provided in accordance with the requirements of this standard shall include, but not be limited to, the following:

(1) Design system verification through testing
(2) Design documentation
(3) System acceptance
(4) Management of change
(5) Regular testing and maintenance

1.3 Application. This standard shall apply to methods for preventing and controlling explosions.

1.3.1 Where provided, explosion prevention shall be achieved by one or more of the following methods as required to mitigate damage, prevent transport of an ignition source, and prevent deflagration:

(1) Using the methods in Chapter 7 or 8 to control the environment within the protected enclosure so that a deflagration cannot occur
(2) Using the methods in Chapter 9, 11, or 12 to prevent the propagation of a deflagration or to prevent the transport of an ignition source
(3) Using the methods in Chapter 10, 13, or 14 or in NFPA 68, *Standard on Explosion Protection by Deflagration Venting*, to mitigate the effects of the deflagration so that the protected enclosure will not be uncontrollably breached

1.3.1.1 It shall be permitted to use the methods in Chapters 4 and 5 in lieu of the methods in Chapters 7 through 14.

1.3.1.2 This standard shall apply to methods for predeflagration detection or control of an ignition. When desired by the owner or operator, or required by the authority having jurisdiction, or when required by other standards, predeflagration detection or control of an ignition shall be achieved by methods described in Chapter 9.

1.3.1.2.1 These methods shall be permitted to be used independently to reduce the frequency of deflagrations.

1.3.1.2.2 These methods shall be permitted to be used as an additional detector for a method of Chapter 10, 11, 12, or 13.

1.3.1.2.3 These methods shall not interfere with the operation of the validated system.

1.3.1.2.4 These methods shall not be permitted to be used as the sole detector for a method of Chapter 10, 11, 12, or 13.

1.3.1.3* When another standard requires explosion prevention or control in accordance with NFPA 69 for an enclosure and that enclosure is interconnected to other enclosures by a line containing combustible dust, gas, mist, or hybrid mixtures that could transmit flame or pressure from the original enclosure, explosion prevention or control shall be provided for interconnected enclosures by one of the following methods:

(1) Deflagration isolation as discussed in Chapters 11 and 12
(2) Explosion venting of the interconnected enclosures within the limitations specified in NFPA 68, Section 8.10
(3) Containment as discussed in Chapter 13
(4) Expanded metal mesh or polymer foam as discussed in Chapter 14

1.3.1.4 It shall be permitted to eliminate deflagration isolation protection for interconnected enclosures based on a documented risk analysis acceptable to the authority having jurisdiction, unless isolation protection is specifically required for such enclosure by other standards.

Copyright 2014 National Fire Protection Association (NFPA). Licensed, by agreement, for individual use and download on October 4, 2014 to LEADER and READER for designated user PATTARAPORN SRITRAKOOL. No other reproduction or transmission in any form permitted without written permission of NFPA. For inquires or to report unauthorized use, contact licensing@nfpa.org.

1.3.2 This standard shall not apply to the following conditions:

(1) Devices or systems designed to protect against detonations
(2)*Design, construction, and installation of deflagration vents
(3) Protection against overpressure due to phenomena other than internal deflagrations
(4) Chemical reactions other than combustion processes
(5) Unconfined deflagrations, such as open-air or vapor cloud explosions
(6) Rock dusting of coal mines, as covered by 30 CFR 75
(7) General use of inert gas for fire extinguishment
(8)*Preparation of tanks, piping, or other enclosures for hot work, such as cutting and welding
(9) Ovens or furnaces handling flammable or combustible atmospheres, as covered by NFPA 86
(10) Marine vapor control systems regulated by 33 CFR 154
(11) Marine vessel tanks regulated by 46 CFR 30, 32, 35, and 39

1.4 Retroactivity. The provisions of this standard reflect a consensus of what is necessary to provide an acceptable degree of protection from the hazards addressed in this standard at the time the standard was issued.

1.4.1 Unless otherwise specified, the provisions of this standard shall not apply to facilities, equipment, structures, or installations that existed or were approved for construction or installation prior to the effective date of the standard. Where specified, the provisions of this standard shall be retroactive.

1.4.2 In those cases where the authority having jurisdiction determines that the existing situation presents an unacceptable degree of risk, the authority having jurisdiction shall be permitted to apply retroactively any portions of this standard deemed appropriate.

1.4.3 The retroactive requirements of this standard shall be permitted to be modified if their application clearly would be impractical in the judgment of the authority having jurisdiction, and only where it is clearly evident that a reasonable degree of safety is provided.

1.5 Equivalency. Nothing in the standard is intended to prevent the use of systems, methods, or devices of equivalent or superior quality, strength, fire resistance, effectiveness, durability, and safety over those prescribed by this standard.

1.5.1 Technical documentation shall be submitted to the authority having jurisdiction to demonstrate equivalency.

1.5.2 The system, method, or device shall be approved for the intended purpose by the authority having jurisdiction.

Chapter 2 Referenced Publications

2.1 General. The documents or portions thereof listed in this chapter are referenced within this standard and shall be considered part of the requirements of this document.

2.2 NFPA Publications. National Fire Protection Association, 1 Batterymarch Park, Quincy, MA 02169-7471.

NFPA 61, *Standard for the Prevention of Fires and Dust Explosions in Agricultural and Food Processing Facilities,* 2013 edition.

NFPA 68, *Standard on Explosion Protection by Deflagration Venting,* 2013 edition.

NFPA 70®, *National Electrical Code®,* 2014 edition.

NFPA 72®, National Fire Alarm and Signaling Code, 2013 edition.

NFPA 86, *Standard for Ovens and Furnaces,* 2011 edition.

NFPA 271, *Standard Method of Test for Heat and Visible Smoke Release Rates for Materials and Products Using an Oxygen Consumption Calorimeter,* 2009 edition.

NFPA 326, *Standard for the Safeguarding of Tanks and Containers for Entry, Cleaning, or Repair,* 2010 edition.

NFPA 484, *Standard for Combustible Metals,* 2012 edition.

NFPA 654, *Standard for the Prevention of Fire and Dust Explosions from the Manufacturing, Processing, and Handling of Combustible Particulate Solids,* 2013 edition.

2.3 Other Publications.

2.3.1 API Publications. American Petroleum Institute, 1220 L Street, NW, Washington, DC 20005-4070.

ANSI/API 510, *Pressure Vessel Inspection Code: In-Service Inspection, Rating, Repair, and Alteration,* Ninth Edition, 2006.

2.3.2 ASME Publications. American Society of Mechanical Engineers, Three Park Avenue, New York, NY 10016-5990.

ASME *Boiler and Pressure Vessel Code,* Section VIII, 2010.

ASME B31.3, *Process Piping,* 2012.

2.3.3 ASTM Publications. ASTM International, 100 Barr Harbor Drive, P.O. Box C700, West Conshohocken, PA 19428-2959.

ASTM D 257, *Standard Test Methods for DC Resistance or Conductance of Insulating Materials,* 2007.

ASTM D 3574, *Standard Test Methods for Flexible Cellular Materials — Slab, Bonded and Molded Urethane Foams,* 2011.

ASTM E 2079, *Standard Test Method for Limiting Oxygen (Oxidant) Concentration for Gases and Vapors,* 2007.

2.3.4 ISO Publications. International Organization for Standardization, 1, ch. de la Voie-Creuse, Case postale 56, CH-1211 Geneva 20, Switzerland.

ISO 16852, *Flame Arresters — Performance Requirements, Test Methods and Limits for Use,* 2008.

2.3.5 Military Specifications. Department of Defense Single Stock Point, Document Automation and Production Service, Building 4/D, 700 Robbins Avenue, Philadelphia, PA 19111-5094.

MIL-DTL-83054C, *Baffle and Inerting Material, Aircraft Fuel Tank,* 2003.

MIL-PRF-87260B, *Foam Material, Explosion Suppression, Inherently Electrically Conductive, for Aircraft Fuel Tanks,* 2006.

2.3.6 U.S. Government Publications. U.S. Government Printing Office, Washington, DC 20402.

Title 29, Code of Federal Regulations, Part 1910.146, "Permit-Required Confined Spaces Standard."

Title 29, Code of Federal Regulations, Part 1910.147, "The Control of Hazardous Energy (Lock-Out/Tag-Out)."

Title 30, Code of Federal Regulations, Part 75.

Title 33, Code of Federal Regulations, Part 154, "Waterfront Facilities."

Title 46, Code of Federal Regulations, Part 30.

Title 46, Code of Federal Regulations, Part 32, "Shipping."

Title 46, Code of Federal Regulations, Part 35.

Title 46, Code of Federal Regulations, Part 39.

Title 49, Code of Federal Regulations, Part 173.24, U.S. Department of Transportation, "General Requirements for Packaging and Packages."

Copyright 2014 National Fire Protection Association (NFPA). Licensed, by agreement, for individual use and download on October 4, 2014 to LEADER and READER for designated user PATTARAPORN SRITRAKOOL. No other reproduction or transmission in any form permitted without written permission of NFPA. For inquires or to report unauthorized use, contact licensing@nfpa.org.

2.3.7 Other Publications.

Bartknecht, W., *Explosions: Course, Prevention, Protection,* Springer-Verlag, Heidelberg, Germany, 1989.

Merriam-Webster's Collegiate Dictionary, 11th edition, Merriam-Webster, Inc., Springfield, MA, 2003.

2.4 References for Extracts in Mandatory Sections.

NFPA 68, *Standard on Explosion Protection by Deflagration Venting,* 2013 edition.

NFPA 72®, National Fire Alarm and Signaling Code, 2013 edition.

NFPA 302, *Fire Protection Standard for Pleasure and Commercial Motor Craft,* 2010 edition.

NFPA 497, *Recommended Practice for the Classification of Flammable Liquids, Gases, or Vapors and of Hazardous (Classified) Locations for Electrical Installations in Chemical Process Areas,* 2012 edition.

NFPA 654, *Standard for the Prevention of Fire and Dust Explosions from the Manufacturing, Processing, and Handling of Combustible Particulate Solids,* 2013 edition.

Chapter 3 Definitions

3.1 General. The definitions contained in this chapter shall apply to the terms used in this standard. Where terms are not defined in this chapter or within another chapter, they shall be defined using their ordinarily accepted meanings within the context in which they are used. *Merriam-Webster's Collegiate Dictionary,* 11th edition, shall be the source for the ordinarily accepted meaning.

3.2 NFPA Official Definitions.

3.2.1* Approved. Acceptable to the authority having jurisdiction.

3.2.2* Authority Having Jurisdiction (AHJ). An organization, office, or individual responsible for enforcing the requirements of a code or standard, or for approving equipment, materials, an installation, or a procedure.

3.2.3 Labeled. Equipment or materials to which has been attached a label, symbol, or other identifying mark of an organization that is acceptable to the authority having jurisdiction and concerned with product evaluation, that maintains periodic inspection of production of labeled equipment or materials, and by whose labeling the manufacturer indicates compliance with appropriate standards or performance in a specified manner.

3.2.4* Listed. Equipment, materials, or services included in a list published by an organization that is acceptable to the authority having jurisdiction and concerned with evaluation of products or services, that maintains periodic inspection of production of listed equipment or materials or periodic evaluation of services, and whose listing states that either the equipment, material, or service meets appropriate designated standards or has been tested and found suitable for a specified purpose.

3.2.5 Shall. Indicates a mandatory requirement.

3.2.6 Should. Indicates a recommendation or that which is advised but not required.

3.2.7 Standard. A document, the main text of which contains only mandatory provisions using the word "shall" to indicate requirements and which is in a form generally suitable for mandatory reference by another standard or code or for adoption into law. Nonmandatory provisions are not to be considered a part of the requirements of a standard and shall be located in an appendix, annex, footnote, informational note, or other means as permitted in the *Manual of Style for NFPA Technical Committee Documents.*

3.3 General Definitions.

3.3.1 Blanketing (or Padding). The technique of maintaining an atmosphere that is either inert or fuel-enriched in the vapor space of a container or vessel.

3.3.2 Burning Velocity.

3.3.2.1 ***Flame Burning Velocity.*** The burning velocity of a laminar flame under specified conditions of composition, temperature, and pressure for unburned gas.

3.3.2.2 ***Fundamental Burning Velocity.*** The burning velocity of a laminar flame under stated conditions of composition, temperature, and pressure of the unburned gas. [**68,** 2013]

3.3.3 Combustible. Capable of undergoing combustion.

3.3.4* Combustible Dust. A finely divided combustible particulate solid that presents a flash fire hazard or explosion hazard when suspended in air or the process-specific oxidizing medium over a range of concentrations [**654,** 2013].

3.3.5* Combustible Particulate Solid. An oxidizable, solid-phase material comprising distinct particles or pieces.

3.3.6 Combustion. A chemical process of oxidation that occurs at a rate fast enough to produce heat and usually light in the form of either a glow or flame.

3.3.7 Concentration Reduction.

3.3.7.1 ***Combustible Concentration Reduction.*** The technique of maintaining the concentration of combustible material in a closed space below the lower flammable limit.

3.3.7.2 ***Oxidant Concentration Reduction.*** The technique of maintaining the concentration of an oxidant in a closed space below the concentration required for ignition to occur.

3.3.8 Deflagration. Propagation of a combustion zone at a velocity that is less than the speed of sound in the unreacted medium. [**68,** 2013]

3.3.9 Deflagration Pressure Containment. The technique of specifying the design pressure of a vessel and its appurtenances so they are capable of withstanding the maximum pressures resulting from an internal deflagration.

3.3.10 Deflagration Suppression. The technique of detecting and arresting combustion in a confined space while the combustion is still in its incipient stage, thus preventing the development of pressures that could result in an explosion.

3.3.11 Detonation. Propagation of a combustion zone at a velocity that is greater than the speed of sound in the unreacted medium. [**68,** 2013]

3.3.12 Enclosure. A confined or partially confined volume. [**68,** 2013]

3.3.13 Enclosure Strength (P_{es}). Up to two-thirds the ultimate strength for low-strength enclosures; for high-strength enclosures the enclosure design pressure sufficient to resist P_{red}. [**68,** 2013]

3.3.14 Explosion. The bursting or rupture of an enclosure or a container due to the development of internal pressure from a deflagration.

Copyright 2014 National Fire Protection Association (NFPA). Licensed, by agreement, for individual use and download on October 4, 2014 to LEADER and READER for designated user PATTARAPORN SRITRAKOOL. No other reproduction or transmission in any form permitted without written permission of NFPA. For inquires or to report unauthorized use, contact licensing@nfpa.org.

3.3.15 Fast-Acting Valve. A valve that closes a path of deflagration propagation in a pipe or duct in response to upstream detection of a deflagration.

3.3.16* Flame Arrester. A device that prevents the transmission of a flame through a flammable gas/air mixture by quenching the flame on the surfaces of an array of small passages through which the flame must pass.

3.3.17 Flame Front Diverter. A device that opens in response to the pressure wave preceding the flame front of the deflagration, thereby venting the pressure wave and flame front.

3.3.18 Flame Speed. The speed of a flame front relative to a fixed reference point. [**68,** 2013]

3.3.19* Flammable Limits. The minimum and maximum concentrations of a combustible material in a homogeneous mixture with a gaseous oxidizer that will propagate a flame.

3.3.19.1 ***Lower Flammable Limit (LFL).*** The lowest concentration of a combustible substance in an oxidizing medium that will propagate a flame.

3.3.19.2 ***Upper Flammable Limit (UFL).*** The highest concentration of a combustible substance in a gaseous oxidizer that will propagate a flame. [**68,** 2013]

3.3.20 Flammable Range. The range of concentrations between the lower and upper flammable limits. [**68,** 2013]

3.3.21 Gas. The state of matter characterized by complete molecular mobility and unlimited expansion; used synonymously with the term *vapor.* [**68,** 2013]

3.3.21.1 ***Inert Gas.*** A gas that is noncombustible and nonreactive.

3.3.21.2 ***Purge Gas.*** An inert or a combustible gas that is continuously or intermittently added to a system to render the atmosphere nonignitible.

3.3.22* Hybrid Mixture. An explosible heterogeneous mixture, comprising gas with suspended solid or liquid particulates, in which the total flammable gas concentration is ≥10 percent of the lower flammable limit (LFL) and the total suspended particulate concentration is ≥10 percent of the minimum explosible concentration (MEC). [**68,** 2013]

3.3.23 Inerting. A technique by which a combustible mixture is rendered nonignitible by adding an inert gas or a noncombustible dust. *(See also 3.3.1, Blanketing.)*

3.3.24* Isolation. A means of preventing certain stream properties from being conveyed past a predefined point.

3.3.24.1 ***Chemical Isolation.*** A means of preventing flame front and ignition from being conveyed past a predetermined point by injection of a chemical suppressant.

3.3.24.2 ***Deflagration Isolation.*** A method employing equipment and procedures that interrupts the propagation of a deflagration flame front past a predetermined point.

3.3.24.3 ***Flow Isolation.*** A method employing equipment and procedures that interrupts flow and prevents pressure rise beyond a predetermined point.

3.3.24.4 ***Ignition Source Isolation.*** A method employing equipment and procedures that interrupts the propagation of an igniting medium past a predetermined point.

3.3.25* Limiting Oxidant Concentration (LOC). The concentration of oxidant in a fuel-oxidant-diluent mixture below which a deflagration cannot occur under specified conditions.

3.3.26 Liquid Seal. A device that prevents the passage of flame by passing the gas mixture through a noncombustible liquid.

3.3.27 Maximum Experimental Safe Gap (MESG). The maximum clearance between two parallel metal surfaces that has been found, under specified test conditions, to prevent an explosion in a test chamber from being propagated to a secondary chamber containing the same gas or vapor at the same concentration. [**497,** 2012]

3.3.28 Maximum Pressure (P_{max}). The maximum pressure developed in a contained deflagration of an optimum mixture. [**68,** 2013]

3.3.29 Mist. A dispersion of fine liquid droplets in a gaseous medium. [**68,** 2013]

3.3.30 Oxidant. Any gaseous material that can react with a fuel (either gas, dust, or mist) to produce combustion. [**68,** 2013]

3.3.31 Padding. See 3.3.1.

3.3.32 Pressure Piling. A condition during deflagration in which pressure increases in the unreacted medium ahead of the propagating combustion zone.

3.3.33 Qualified Person. A person who possesses a recognized degree, certificate, professional standing, or skill and who, by knowledge, training, and experience, has demonstrated the ability to deal with problems related to the subject matter, the work, or the project.

3.3.34* Reduced Pressure (P_{red}). The maximum pressure developed in a vented enclosure during a vented deflagration. [**68,** 2013]

3.3.35* Self-Decomposing Mixtures. Materials or mixtures capable of propagating a flame in the absence of oxidant.

3.3.36 Spark Extinguishing System. An extinguishing system in which the radiant energy of a spark or an ember is detected and the spark or ember is quenched.

3.3.37 Suppressant. The chemical agent used in a deflagration suppression system to extinguish the deflagration.

3.3.38 System Acceptance. A series of actions to verify installation, operation, and integration of the protection system in accordance with the basis of design, as well as training, validation testing, documentation, and arming of the system.

3.3.39 Trouble Signal. A signal that results from the detection of a trouble condition. [**72,** 2013]

3.3.39.1 ***Trouble Condition.*** An abnormal condition in a system due to a fault. [**72,** 2013]

3.3.40 Vapor. See 3.3.21.

3.3.41 Ventilation. The changing of air within a compartment by natural or mechanical means. [**302,** 2010]

Chapter 4 General Requirements

4.1 Goal. The goal of this standard shall be to provide effective deflagration prevention and control for enclosures where there is the potential for a deflagration.

Copyright 2014 National Fire Protection Association (NFPA). Licensed, by agreement, for individual use and download on October 4, 2014 to LEADER and READER for designated user PATTARAPORN SRITRAKOOL. No other reproduction or transmission in any form permitted without written permission of NFPA. For inquires or to report unauthorized use, contact licensing@nfpa.org.

4.2 Objectives.

4.2.1 Life Safety.

4.2.1.1 Deflagration prevention and control for occupied enclosures shall prevent the structural failure of the enclosure and minimize injury to personnel in adjacent areas outside of the enclosure.

4.2.1.2 Deflagration prevention and control for unoccupied enclosures shall prevent the rupture of the enclosure.

4.2.1.3 Deflagration prevention and control shall be arranged to avoid injury to personnel.

4.2.2 Property Protection.

4.2.2.1 Deflagration prevention and control systems shall be designed to limit damage of the protected enclosure.

4.2.2.2 Deflagration prevention and control systems shall be arranged to avoid ignition of adjacent property.

4.2.2.3 Deflagration prevention and control systems shall be designed to avoid damage to adjacent property.

4.2.2.4 Deflagration prevention and control shall be designed to avoid projectile damage to adjacent property.

4.2.3 Hazard Analysis.

4.2.3.1 The design basis deflagration hazard scenario shall be identified and documented.

4.2.3.2 A documented risk evaluation acceptable to the authority having jurisdiction shall be permitted to be conducted to determine the level of protection to be provided.

4.3 Compliance Options.

4.3.1 Options. Deflagration protection and control meeting the goals and objectives of Sections 4.1 and 4.2 shall be provided in accordance with either of the following:

(1) The performance-based provisions of 4.3.2
(2) The prescriptive-based provisions of 4.3.3

4.3.2 Performance-Based Design. A performance-based design shall be in accordance with Chapter 5 of this standard.

4.3.3 Prescriptive-Based Design. A prescriptive-based design shall be in accordance with Chapters 6 through 15 of this standard.

Chapter 5 Performance-Based Design Option

5.1 General Requirements.

5.1.1 Qualifications. The performance-based design shall be prepared by a person with qualifications acceptable to the authority having jurisdiction.

5.1.2 Design Documentation. The design methodology and data sources shall be documented and maintained for the life of the protected enclosure.

5.1.3 Management of Change.

5.1.3.1 To continue meeting the performance goals and objectives of this standard, the design features required for each prevention and control system shall be maintained for the life of the protected enclosure.

5.1.3.2 Any changes to the process shall require review of the design basis for each affected prevention and control system prior to implementation of the change.

5.1.3.3 Any changes to the design features shall require approval of the authority having jurisdiction prior to the actual change.

5.2 Performance Criteria.

5.2.1 Prevention and control system design shall be based on the documented hazard scenario.

5.2.2 Prevention and control systems shall limit the reduced pressure (P_{red}) within an enclosure to meet the objectives in 4.2.1.1 and 4.2.1.2.

5.2.3 Deflagration Prevention and Control.

5.2.3.1 Combustible material outside the enclosure shall not attain their ignition temperature from flame or hot gases.

5.2.3.2 Prevention and control systems shall limit the risk of damage to exposed structures.

5.2.3.3 Prevention and control systems shall not expose personnel to flame, hot gases, hot particles, toxic materials, or projectiles.

5.2.3.4 Prevention and control systems shall limit the risk of flame spread from vessel to vessel via interconnected ducts.

5.2.4 Inspection and Maintenance.

5.2.4.1 Prevention and control systems shall be regularly inspected and maintained to confirm the ability to perform as designed.

5.2.4.1.1 If no guidance is given from the performance-based design documents, the requirements of Chapter 15 of this standard shall apply.

5.2.4.2 Inspection and maintenance shall be documented and retained for at least 1 year or the last three inspections.

Chapter 6 General Prescriptive Requirements

6.1* Methods. The methods recognized in this standard shall be grouped based on the prevention of combustion or on the prevention or limitation of damage after combustion occurs.

6.1.1 Methods Based on the Prevention of Combustion. The following shall be considered methods based on preventing combustion:

(1) Oxidant concentration reduction
(2) Combustible concentration reduction

6.1.2 Methods Based on the Prevention or Limitation of Damage. The following shall be considered methods based on preventing or limiting damage:

(1) Predeflagration detection and ignition control systems
(2) Deflagration suppression
(3) Isolation methods
(4) Deflagration pressure containment

6.2 Limitations. The limitations specific to each method shall be considered and are specified in the corresponding chapter for each method.

Copyright 2014 National Fire Protection Association (NFPA). Licensed, by agreement, for individual use and download on October 4, 2014 to LEADER and READER for designated user PATTARAPORN SRITRAKOOL. No other reproduction or transmission in any form permitted without written permission of NFPA. For inquires or to report unauthorized use, contact licensing@nfpa.org.

6.3 Factors to Be Considered. The following factors shall be considered in the selection of one of the methods and the design of the system:

(1) Effectiveness of each method
(2) Reliability of the system
(3) Personnel hazards inherent in each method

6.3.1 The reliability of the system chosen shall be assessed using the following factors:

(1) System design basis
(2) Possibility of electrical and mechanical malfunction
(3) Dependence on sophisticated activating systems
(4) Need for special installation, training, operating, testing, and maintenance procedures
(5) Further limitations as presented in each chapter

6.3.2 In general, explosion prevention systems shall be used to protect processing, storage, and materials-handling equipment.

6.3.3 When explosion prevention techniques are applied to rooms, buildings, or other enclosures where personnel are present, consideration shall be given to the safety of the personnel.

6.3.4 When using the techniques of Chapters 10, 11, 12, or 13, or of NFPA 68, *Standard on Explosion Protection by Deflagration Venting*, the enclosure strength, P_{es}, of the protected equipment shall be determined and all pertinent calculations or test information, acceptable to the AHJ, shall be documented and certified by a licensed professional engineer.

6.3.4.1 P_{red} shall not exceed two-thirds of the ultimate strength for the enclosure, provided deformation of the equipment can be tolerated.

6.3.4.2 Where deformation cannot be tolerated, P_{red} shall not exceed two-thirds of the yield strength for the enclosure.

6.3.4.3 Determination of required enclosure strength shall be in accordance with NFPA 68, Section 4.3.

6.4 Plans.

6.4.1 Plans, system specifications, and manufacturer's recommendations for testing and maintenance shall contain information that enables the authority having jurisdiction to evaluate the explosion hazard and the effectiveness of the system.

6.4.2 Details of the plans shall include the following information:

(1) Pertinent chemical and physical characteristics of the materials involved
(2) Location of hazards
(3) Enclosures or limits and isolation of the hazards
(4) Exposures to the hazards

6.5 System Acceptance. All new protection installations and modifications shall be tested or otherwise evaluated to confirm operational integrity.

6.5.1 Tests shall be in accordance with the manufacturer's recommendations.

6.5.2 A written report of the tests shall be provided to the users.

6.6* Inspection and Maintenance.

6.6.1* All systems shall be inspected for operability in accordance with the manufacturer's recommendations.

6.6.2 An inspection and preventive maintenance schedule shall be established in accordance with the manufacturer's recommendations.

6.7 Housekeeping. In facilities handling combustible particulate solids where such material(s) cannot be completely and reliably contained within the process equipment during normal operation, there can be a significant risk for secondary explosions from dust deposits in the process area. In such situations, housekeeping shall be performed in accordance with NFPA 654, *Standard for the Prevention of Fire and Dust Explosions from the Manufacturing, Processing, and Handling of Combustible Particulate Solids*; NFPA 484, *Standard for Combustible Metals*; and NFPA 61, *Standard for the Prevention of Fires and Dust Explosions in Agricultural and Food Processing Facilities*.

Chapter 7 Deflagration Prevention by Oxidant Concentration Reduction

7.1 Application. The technique for oxidant concentration reduction for deflagration prevention shall be permitted to be considered where a mixture of oxidant and flammable material is confined to an enclosure within which the oxidant concentration can be controlled.

7.1.1* The system shall be maintained at an oxidant concentration that is low enough to prevent a deflagration.

7.1.2 Oxidant concentration reduction shall be permitted to be applied to rooms or buildings, but because oxygen-deficient atmospheres cannot sustain life, one of the following shall apply:

(1) Operations in such areas shall be remotely controlled.
(2) Operating personnel shall be provided with breathing apparatus as well as other safeguards.

7.1.3* The owner or operator shall evaluate the need for other fire and explosion protection measures where the combustible material leaves the low oxidant concentration environment.

7.1.4 Warning Signs.

7.1.4.1 Where oxidant concentration reduction that poses an asphyxiation hazard is employed, warning signs shall be posted.

7.1.4.2 These warning signs shall be applied to either the inerting system components, the enclosure, or both.

7.2 Design and Operating Requirements.

7.2.1* Design Considerations. The following factors shall be considered in the design of a system intended to reduce the oxidant concentration:

(1) Required reduction in oxidant concentration
(2) Variations in the process, process temperature and pressure, and materials being processed
(3) Source purge gas supply and equipment installation
(4) Compatibility of the purge gas with the process
(5) Operating controls
(6) Maintenance, inspection, and testing
(7) Personnel exposure due to leakage of purge gas to surrounding areas
(8) Need for breathing apparatus by personnel
(9)*Reduced effectiveness of purge gas due to equipment leakage and loss through vents

Copyright 2014 National Fire Protection Association (NFPA). Licensed, by agreement, for individual use and download on October 4, 2014 to LEADER and READER for designated user PATTARAPORN SRITRAKOOL. No other reproduction or transmission in any form permitted without written permission of NFPA. For inquires or to report unauthorized use, contact licensing@nfpa.org.

7.2.2 Protection System Design and Operation.

7.2.2.1* The owner or operator shall be responsible for a thorough analysis of the process to determine the type and degree of deflagration hazards inherent in the process.

7.2.2.2 Information required for the oxidant concentration monitoring and control shall be compiled and documented. This shall include, but not be limited to, the following information:

(1) Monitoring and control objectives
(2) Monitored and controlled areas of the process
(3) Dimensioned drawings of the process with the following information:
    (a) Equipment make and model if available, including volumes and diameters and design strengths
    (b) Plan and elevation views with flows indicated
(4) Startup, normal, shutdown, temporary operations, and emergency shutdown process conditions and ranges for the following factors:
    (a) Flow
    (b) Temperature
    (c) Pressure
    (d) Oxidant concentration
(5) Process flow diagram and description
(6) Ambient temperature in process area
(7) Process interlocks

7.2.2.3 The owner or operator shall disclose any and all process information required for the protection system design.

7.2.2.4 The protection system design shall be subject to a documented review by a qualified person.

7.2.2.5 The owner or operator shall be responsible for the maintenance of the system after installation and acceptance based on procedures provided by the vendor. Maintenance records shall be retained for inspection by the authority having jurisdiction.

7.2.2.6 The owner or operator shall be responsible for periodic inspection of the system by personnel trained by the system manufacturer. The inspection frequency shall be in accordance with Section 15.7.

7.2.2.7 Management of Change. The effect of any process change shall be addressed as specified in Section 15.11.

7.2.2.8 All documentation relevant to the protection system shall be retained in accordance with Chapter 15.

7.2.3 Limiting Oxidant Concentrations (LOCs).

7.2.3.1* Table C.1(a) and Table C.1(b) shall be permitted to be used as a basis for determining LOCs of flammable gases or suspensions of combustible dusts.

7.2.3.1.1 For gases and vapors, if the LOC values according to ASTM E 2079, *Standard Test Method for Limiting Oxygen (Oxidant) Concentration for Gases and Vapors,* are available, then these shall be used.

7.2.3.1.2 For gases and vapors, if the LOC values according to ASTM E 2079 are not available, then the LOC values obtained in flammability tubes shall be used after adjustment by subtracting 2 percent by volume oxidant as indicated in the adjusted columns in Table C.1(a).

7.2.3.2 For fuel, inert, and oxidant combinations not listed in Table C.1(a) or Table C.1(b) or for situations when the process conditions differ from the conditions under which the existing data were obtained, the test methods described in ASTM E 2079 shall be permitted to be used.

7.2.3.3 The extent of oxidant reduction shall be determined by testing where conditions vary significantly from the test conditions under which the data were obtained.

7.2.4 Use of Purge Gas Systems.

7.2.4.1 An additional backflash prevention or protection system shall be installed if a purge gas system is used for lines collecting flammable mixtures and the collection system terminates at a flare or incinerator.

7.2.4.2 Hard-piped vapor control systems shall not require flame arresters at each source connection to the system, provided that the system is designed to operate outside the flammable range.

7.2.4.3 Systems requiring hookups prior to vapor transfer, such as vapor collection from mobile vehicles, shall be purged to a level below the LOC prior to transfer, or backflash protection shall be provided near the point of connection.

7.2.4.4* Where oxygen-deficient atmospheres are maintained in equipment operating under conditions that might form pyrophoric iron sulfides or other pyrophoric materials, a procedure shall be developed to prevent uncontrolled oxidation of the sulfides or other pyrophoric materials.

7.3 Purge Gas Sources.

7.3.1 The purge gas shall be obtained from a source that is capable of continuously supplying the required amount of purge gas to maintain the necessary degree of oxidant deficiency.

7.3.2 Possible sources of purge gas shall include, but shall not be limited to, the following sources:

(1) Commercially available inert gas, such as nitrogen, carbon dioxide, argon, or helium, supplied from high-pressure tanks or cylinders or from air separation plants
(2) Inert gas supplied from a gas generator that burns or catalytically oxidizes a hydrocarbon to produce an oxygen-deficient purge gas
(3) Products of combustion from process furnaces or boiler furnaces for which purification or cooling could be necessary to avoid contamination
(4)*Steam, if it can be supplied at a rate that raises and maintains the protected vessel or system at a temperature high enough to prevent condensation of the steam
(5) High-purity nitrogen supplied by air oxidation of ammonia
(6) Inert gas supplied by removal of oxygen from air by absorption, adsorption, chemical reaction, or membrane permeation
(7) Fuel gases such as methane or natural gas

7.4 Purge Gas Conditioning.

7.4.1 Purge gas shall be conditioned to minimize contaminants that might be harmful to the gas distribution system or that might interfere with the operation of the system.

7.4.2 Before introduction, the purge gas shall be at a temperature compatible with the process being protected to minimize the chance of thermal ignition or condensation.

7.4.3 Purge gas that is distributed in a system subject to freezing temperatures shall have a dew point such that water condensation cannot occur at the minimum ambient temperature to which the system will be exposed.

Copyright 2014 National Fire Protection Association (NFPA). Licensed, by agreement, for individual use and download on October 4, 2014 to LEADER and READER for designated user PATTARAPORN SRITRAKOOL. No other reproduction or transmission in any form permitted without written permission of NFPA. For inquires or to report unauthorized use, contact licensing@nfpa.org.

7.5 Piping Systems. Purge gas distribution systems shall be designed and installed in accordance with recognized engineering practices.

7.5.1 Where purge gas exceeds a gauge pressure of 103 kPa (15 psi), the piping system shall be designed in accordance with ASME B31.3, *Process Piping*.

7.5.2 Where required, piping systems shall be provided with filters, screens, or other means of preventing foreign material from entering critical parts of the system, such as pressure regulators, valves, and instrumentation.

7.5.3 Where required, moisture traps shall be provided and lines shall drain toward the traps.

7.5.3.1 Blowdown connections for moisture traps shall be provided.

7.5.3.2 Moisture traps shall be protected from freezing.

7.5.4 When flue gas or combustion gas is used, means shall be provided to prevent propagation of flame into the system being protected.

7.5.5* Manual shutoff valves shall be provided at each major division point in the distribution system.

7.5.6 The inert gas distribution system shall be designed to prevent contamination by hazardous process materials.

7.5.6.1 Where required, check valves or other design features shall be incorporated to prevent the potential for contamination due to loss of purge gas supply or to excessive pressure in the process unit being protected.

7.5.6.2 A single check valve shall not be considered a positive backflow connection.

7.5.7* Cross-connections between the purge gas distribution system and any other system shall be prohibited unless one of the following criteria is met:

(1) Positive measures shall be taken to prevent backflow from the other system into the purge gas system.
(2) Cross-connections to backup purge gas systems shall be permitted without backflow prevention unless backflow could create a hazard.

7.5.8 The entire distribution system shall be cleaned and functionally tested prior to being placed in service.

7.5.9 The gases from an enclosure or vessel being purged shall be vented to a safe location.

7.6 Application of Purge Gas at Points of Use. Purge gas shall be introduced and exhausted so that distribution is ensured and the desired reduction in oxidant concentration is maintained throughout the system being protected.

7.6.1 Multiple inlets and outlets shall be permitted.

7.6.2 Connections between the purge gas distribution piping and the protected enclosure or system shall be designed for maximum purge gas pressure.

7.7 Instrumentation.

7.7.1* General. Instrumentation shall be provided to monitor the purge gas being supplied to the distribution system.

7.7.1.1 Instrumentation shall be calibrated according to the requirements in Chapter 15.

7.7.1.2 When the conditions being measured are critical to the safety of personnel, alarms shall be provided to indicate abnormal operation of the system.

7.7.2 Systems Operated Below the Limiting Oxidant Concentration (LOC).

7.7.2.1* Instrumentation shall be installed in as many points as necessary to ensure the desired oxidant concentration reduction within the protected system.

7.7.2.2 The determination of the LOC for the system shall be based on the worst credible case gas mixture yielding the smallest LOC.

7.7.2.3 A safety margin shall be maintained between the LOC and the normal working concentration in the system.

7.7.2.4* The safety margin shall take into account all of the following factors:

(1) Fluctuations occurring in the system
(2) Sensitivity and reliability of monitoring and control equipment
(3) Probability and consequences of an explosion

7.7.2.5* One of the following requirements shall be met where the oxygen concentration is continuously monitored and controlled with safety interlocks:

(1) Where the LOC is greater than or equal to 5 percent, a safety margin of at least 2 volume percent below the worst credible case LOC shall be maintained.
(2) Where the LOC is less than 5 percent, the equipment shall be operated at no more than 60 percent of the LOC.

7.7.2.6 The requirement of 7.7.2.5 shall not apply to partial oxidation processes.

7.7.2.7* Where the oxygen concentration is not continuously monitored and controlled with safety interlocks, one of the following requirements shall be met:

(1) Where the LOC is greater than or equal to 7.5 percent, a safety margin of at least 4.5 volume percent below the worst credible case LOC shall be maintained.
(2) Where the LOC is less than 7.5 percent, the oxygen concentration shall be designed to operate at no more than 40 percent of the LOC.

7.7.2.7.1 The oxygen concentration shall be checked on a regularly scheduled basis.

7.7.2.7.2* The vapor space in low-pressure field storage tanks that have padding shall not require checking of the oxygen concentration.

7.7.2.7.3 The procedure of pulling a partial vacuum and then breaking the vacuum with inert gas shall be permitted without measuring the oxygen concentration if all of the following conditions apply:

(1) The vacuum condition is held for a time to check for leakage.
(2) The vacuum level is monitored.
(3) The vacuum-creating medium is compatible with the process chemistry.
(4) The residual oxygen partial pressure is calculated or demonstrated by test to be at least 40 percent below the LOC.

7.7.3 Systems Operated Above the Upper Flammable Limit (UFL).

7.7.3.1* Systems operating above the UFL shall be permitted to be used, and the UFL shall be determined at the conditions applicable to the system.

Copyright 2014 National Fire Protection Association (NFPA). Licensed, by agreement, for individual use and download on October 4, 2014 to LEADER and READER for designated user PATTARAPORN SRITRAKOOL. No other reproduction or transmission in any form permitted without written permission of NFPA. For inquires or to report unauthorized use, contact licensing@nfpa.org.

7.7.3.2 Vent headers operated near atmospheric pressure shall be permitted to be rendered nonflammable by the addition of at least 25 volume percent of natural gas or methane where both of the following criteria are met:

(1) The vent headers shall not contain any vapor with a UFL greater than that of hydrogen in air (75 percent).
(2) The vent headers shall not contain oxygen in concentrations greater than can be derived from ambient air.

7.7.3.3 Instrumentation to control methane flow shall be acceptable to the authority having jurisdiction.

Chapter 8 Deflagration Prevention by Combustible Concentration Reduction

8.1* Application. The technique for combustible concentration reduction shall be permitted to be considered where a mixture of a combustible material and an oxidant is confined to an enclosure and where the concentration of the combustible can be maintained below the lower flammable limit (LFL).

8.2 Basic Design Considerations.

8.2.1 All of the following factors shall be considered in the design of a system intended to reduce the combustible concentration below the LFL:

(1) Required reduction in combustible concentration
(2) Variations in the process, process temperature and pressure, and materials being processed
(3) Operating controls
(4) Maintenance, inspection, and testing

8.2.2* The LFLs of the combustible components shall be determined at all operating conditions, including startup and shutdown.

8.2.3 Protection System Design and Operation.

8.2.3.1* The owner or operator shall be responsible for a thorough analysis of the process to determine the type and degree of deflagration hazards inherent in the process.

8.2.3.2 Information required for the monitoring and control of the concentration of combustible components shall be compiled and documented. This information shall include, but not be limited to, the following:

(1) Monitoring and control objectives
(2) Monitored and controlled areas of the process
(3) Dimensioned drawings of the process with the following:
    (a) Equipment make and model if available, including volumes and diameters and design strengths
    (b) Plan and elevation views with flows indicated
(4) Startup, normal, shutdown, temporary operations, and emergency shutdown process conditions and ranges for the following:
    (a) Flow
    (b) Temperature
    (c) Pressure
    (d) Oxidant concentration
    (e) Fuel concentration
(5) Process flow diagram and description
(6) Ambient temperature in process area
(7) Process interlocks

8.2.3.3 The owner or operator shall disclose any and all process information required for the protection system design.

8.2.3.4 The protection system design shall be subject to a documented review by a qualified person.

8.2.3.5 The owner or operator shall be responsible for the maintenance of the system after installation and acceptance based on procedures provided by the vendor. Maintenance records shall be retained for inspection by the authority having jurisdiction.

8.2.3.6 The owner or operator shall be responsible for periodic inspection of the system by personnel trained by the system manufacturer. The inspection frequency shall be in accordance with Section 15.7.

8.2.3.7 Management of Change. The effect of any process change shall be addressed as specified in Section 15.11.

8.2.3.8 All documentation relevant to the protection system shall be retained in accordance with Chapter 15.

8.3 Design and Operating Requirements.

8.3.1* Combustible Concentration Limit. The combustible concentration shall be maintained at or below 25 percent of the LFL, unless the following conditions apply:

(1) Where continuously monitored and controlled with safety interlocks, the combustible concentration shall be permitted to be maintained at or below 60 percent of the LFL.
(2) Aluminum powder production systems designed and operated in accordance with NFPA 484, *Standard for Combustible Metals,* shall be permitted to be maintained at or below 50 percent of the LFL.

8.3.2* Catalytic Oxidation. Where catalytic oxidation is used for combustible concentration reduction, the following shall apply:

(1) Isolation systems shall be provided in all inlets to the catalytic oxidation unit.
(2) Unless the combustible concentration is monitored continuously, the effectiveness of the catalytic oxidation system shall be verified periodically in accordance with the manufacturer's recommendations.

8.3.3 Ventilation or Air Dilution.

8.3.3.1 If ventilation is used, the outlets from the protected enclosures shall be located so that hazardous concentrations of the exhausted air cannot enter or be drawn into the fresh air intakes of environmental air–handling systems.

8.3.3.2 Air intakes shall meet one of the following requirements:

(1) They shall be located so that combustible material cannot enter the air-handling system, even in the event of spills or leaks.
(2) They shall be provided with gas detectors that automatically interlock to stop air intake.

8.3.3.3 Filters, dryers, or precipitators in the air intakes shall be located such that they are accessible for cleaning and maintenance.

8.4 Instrumentation.

8.4.1* Instrumentation shall be provided to monitor and control the process flows.

Copyright 2014 National Fire Protection Association (NFPA). Licensed, by agreement, for individual use and download on October 4, 2014 to LEADER and READER for designated user PATTARAPORN SRITRAKOOL. No other reproduction or transmission in any form permitted without written permission of NFPA. For inquires or to report unauthorized use, contact licensing@nfpa.org.

8.4.2 Instrumentation shall be calibrated according to the requirements of Chapter 15.

8.4.3 Where the enclosure being protected presents a personnel hazard, alarms shall be provided to indicate abnormal operation of the system.

Chapter 9 Predeflagration Detection and Control of Ignition Sources

9.1* Application. Systems used for the predeflagration detection and control of certain specific ignition sources shall be permitted to be used to reduce the probability of the occurrence of deflagrations in systems that handle combustible particulate solids.

9.1.1 Systems used for the predeflagration detection and control of ignition sources shall be permitted to be used in conjunction with other explosion prevention or explosion protection measures, such as deflagration suppression or deflagration venting, for those systems posing a dust explosion hazard.

9.1.2 Design of systems used for predeflagration detection and control of ignition sources shall be based on various techniques that include, but are not limited to, the use of the following systems:

(1) Optical sensing systems
(2) Gas sensing systems

9.1.3 Optical sensing and gas sensing systems shall be permitted to be used for the detection, control, and extinguishment of ignition sources as they pass through ducts, chutes, hoppers, belts, or similar conveyors or develop in an enclosure.

9.1.4 The optical sensing systems shall operate by means of detectors that sense the radiation from a hot or glowing particle and actuate a means to control or extinguish, such as water spray, carbon dioxide flooding, steam snuffing, diverter valve, stop valve, or initiation of stop material in-feed to the process, if appropriate.

9.1.5 The gas sensing systems shall operate by means of sensing the formation of gaseous thermal decomposition products and actuate a means of control or extinguishment such as alarms, automated shutdown, or the release of the extinguishing system.

9.2 Limitations.

9.2.1 Optical sensing systems and gas sensing systems shall not be used for systems handling flammable gases or hybrid mixtures.

9.2.2 Optical sensing systems and gas sensing systems shall not be used in extinguishing or isolating deflagration flame fronts.

9.3 Optical Sensing System and Gas Sensing System Design Considerations.

9.3.1 General. Optical sensing systems and gas sensing systems shall be listed or approved as a complete system that includes a means to actuate automatic shutdown or other actions described in 9.1.4 and 9.1.5.

9.3.2 Optical Sensing Equipment.

9.3.2.1 Spacing between a detector and control mechanism shall be based on parameters including, but not limited to, the following criteria:

(1) Linear velocity of the material in the duct
(2) Response time of the sensor
(3) Actuator circuitry
(4) Response time of the control mechanism

9.3.2.2 The system manufacturer's application design and guidance shall ensure that a sufficient number of detectors are installed to detect radiant energy at any location in the cross-sectional area of the duct, chute, hopper, belt conveyor, or similar transport system.

9.3.2.3 Provisions shall be made to prevent obscuration of optical sensors.

9.3.2.4 Sensors shall be protected from the accumulation of foreign material that would prevent functioning.

9.3.3 Gas Sensing Equipment.

9.3.3.1 The system shall take air samples at inlets and outlets and evaluate the differential concentration of the selected thermal decomposition products.

9.3.3.2 The design of the gas sensing system shall be based on parameters including, but not limited to, the following criteria:

(1) Process flow
(2) Process flow velocity
(3) Potential measurement interferences (contamination)
(4) Volume
(5) Air exchange rate
(6) Sensor response time

9.3.3.3 The system sampling flow rates and residence times shall be balanced to ensure a relative sample of all air inputs and outputs.

9.3.4 Power and Control Units.

9.3.4.1 A power and control unit shall supply energy to accomplish all of the following processes:

(1) Power all sampling devices, sample preparation unit, control processor, etc.
(2) Energize all electrically actuated extinguishing and control systems
(3) Energize visual and audible alarms
(4) Transfer all auxiliary control and alarm contacts
(5) Control system-disabling interlock and process shutdown circuits

9.3.4.2 The power and control unit shall, as a minimum, fully and continuously supervise all of the following components:

(1) Wiring circuits for opens and other faults
(2) AC power supply (primary)
(3) System safety interlock circuitry
(4) System-disabling interlock circuitry
(5) Releasing outputs
(6) Electrical extinguishing actuators
(7) Air sampler flow (gas sensing only)
(8) Visible and audible alarms
(9) Circuit ground fault

9.3.4.3 In addition to noncritical trouble alarms, the power and control unit shall have separate contacts capable of initiating an orderly shutdown of the protected process upon receipt of any trouble signal that indicates a potentially disabled protection system.

9.3.4.4 The supervisory signal circuits shall be provided with visual and audible trouble signals.

Copyright 2014 National Fire Protection Association (NFPA). Licensed, by agreement, for individual use and download on October 4, 2014 to LEADER and READER for designated user PATTARAPORN SRITRAKOOL. No other reproduction or transmission in any form permitted without written permission of NFPA. For inquires or to report unauthorized use, contact licensing@nfpa.org.

9.4 Testing.

9.4.1 A functional test of all system functions shall be conducted in accordance with the manufacturer's specifications.

9.4.2 The design system shall be based on testing relevant to the early detection and control system.

9.4.3 The sensing system shall be calibrated in accordance with manufacturer's recommendations.

9.5 Protection System Design and Operation.

9.5.1 Process Analysis.

9.5.1.1* The owner or operator shall be responsible for a thorough analysis of the process to determine the type and degree of deflagration hazards inherent in the process.

9.5.1.2 Factors such as the type of combustible material, the enclosure internal geometry, the total volume to be protected, and the operating conditions shall be reviewed in detail.

9.5.1.3 The potential process malfunctions that could affect the extent of the deflagration hazard shall be determined.

9.5.2 The information required for the detection and control system design shall include, but not be limited to, the following:

(1) Protection objective
(2) Protected area of the process
(3) Dimensioned plan and elevation drawings of the process with equipment make and model, if available
(4) Dimensions of inlet and outlet connections
(5) Internal obstructions of protected enclosure
(6) Startup, normal, shutdown, temporary operations, and emergency shutdown process conditions and ranges for the following:
    (a) Flow rate and direction
    (b) Temperature
    (c) Pressure
    (d) Oxidant concentration
    (e) Fuel concentration
(7) Process flow diagram and description
(8) Currently installed protection equipment
(9) Ambient temperature in process area
(10) Explosibility properties of the combustible material
(11) Process interlocks

9.5.3 The owner or operator shall disclose any and all process information required for the protection system design.

9.5.4 The protection system design shall be subject to a documented review by a qualified person.

9.5.5 Maintenance and Inspection.

9.5.5.1 The owner or operator shall be responsible for the maintenance of the system after installation and acceptance.

9.5.5.2 Maintenance records shall be retained for inspection by the authority having jurisdiction in accordance with Section 15.9.

9.5.5.3 The owner or operator shall be responsible for periodic inspection of the system by personnel trained by the system manufacturer.

9.5.5.4 The inspection frequency shall be in accordance with Section 15.7.

9.5.6 Management of Change. The effect of any process change shall be addressed as specified in Section 15.11.

9.5.7 All design documentation relevant to the detection and control system shall be retained in accordance with Chapter 15.

9.6 System Manufacturer's Additional Responsibilities.

9.6.1* The system manufacturer shall provide the owner or operator with information and documentation supporting the design; this information shall be suitable for review by the AHJ.

9.6.2 Upon request, the system manufacturer shall provide to the owner or operator documentation supporting that the design is in compliance with the manufacturer's independent third-party approval, including application limitations, and is suitable for the hazard to be protected.

9.6.3 The system manufacturer shall provide to the owner or operator design specifications based on the data provided by the owner or operator as specified in 9.5.2.

9.6.3.1 Documentation shall be made of the data used in the design.

9.6.3.2 Method of determination shall be consistent with third-party approval and available for review by the authority having jurisdiction.

9.6.4 The system manufacturer shall provide to the owner or operator mechanical and electrical drawings of the system.

9.6.5 The system manufacturer shall provide to the owner or operator installation instructions, operating manuals, and maintenance instructions.

9.6.6 As part of system acceptance, the system manufacturer and the owner or operator shall document that the installation is in accordance with the design and that the system is armed and functional. *(See Section 15.6.)*

9.6.6.1 Variances and any corrective actions shall be identified with the responsible party for any action identified.

9.6.6.2 Changes made at or during installation shall be approved by the system manufacturer and the owner or operator and suitably documented.

9.6.6.3 Concurrence of the AHJ shall be obtained as appropriate.

9.7 Actuation of Other Devices and Systems.

9.7.1 The detection and control system shall be permitted to actuate other devices and systems such as high-speed isolation valves, chemical or mechanical isolation devices, or deluge valves as applicable.

9.8 Process Shutdown.

9.8.1 Upon activation, the detection and control system shall be permitted to initiate an immediate, automatic shutdown of the protected process.

9.8.2 Upon receipt of a trouble signal from the detection and control system, the protected process shall be permitted to initiate an immediate, automatic, and orderly shutdown.

Chapter 10 Deflagration Control by Suppression

10.1* Application.

10.1.1 The technique for deflagration suppression shall be permitted for flammable gases, combustible mists, combustible dusts, or hybrid mixtures that are subject to deflagration in a gas-phase oxidant.

Copyright 2014 National Fire Protection Association (NFPA). Licensed, by agreement, for individual use and download on October 4, 2014 to LEADER and READER for designated user PATTARAPORN SRITRAKOOL. No other reproduction or transmission in any form permitted without written permission of NFPA. For inquires or to report unauthorized use, contact licensing@nfpa.org.

10.1.2 Enclosures that can be protected by a deflagration suppression system shall include, but shall not be limited to, the following equipment:

(1) Processing equipment, such as reactor vessels, mixers, blenders, pulverizers, mills, dryers, ovens, filters, screens, and dust collectors
(2) Storage equipment, such as atmospheric or low-pressure tanks, pressure tanks, and mobile facilities
(3) Material-handling equipment, such as pneumatic and screw conveyors and bucket elevators
(4) Laboratory and pilot plant equipment, including hoods, glove boxes, test cells, and other equipment
(5) Aerosol filling rooms

10.1.3* The suppression system shall be of a design that has been tested under deflagration conditions to verify performance.

10.1.4 The detection conditions; the positioning of the detection points; and the location, quantity, and volume of suppressant containers shall be based upon factors such as, but not limited to:

(1) Time required for detection
(2) Suppressant discharge pattern
(3) Suppressant concentration as a function of time
(4) Suppressant efficiency
(5) Explosibility characteristics of the combustible material
(6) Physical characteristics of the protected enclosure

10.2 Limitations.

10.2.1 Deflagration suppression is successful only where the suppressant can be distributed during the early stages of flame and pressure development.

10.2.2 Deflagration suppression is limited by the physical and chemical properties of the reactants in the system, as well as the design and pressure resistance of the enclosure.

10.2.3* The pressure resistance of the protected enclosure shall not be less than the maximum suppressed deflagration pressure (including effects of suppressant discharge) for the duration of the pressure increase.

10.3 Personnel Safety.

10.3.1* Disarming and Lockout and Tagout Procedures.

10.3.1.1 Disarming and OSHA lockout and tagout procedures (found in 29 CFR 1910.147) and confined space entry procedures (found in 29 CFR 1910.146), NFPA 326, *Standard for the Safeguarding of Tanks and Containers for Entry, Cleaning, or Repair*, or local country equivalent, shall be followed prior to entering an enclosure protected by deflagration suppression systems.

10.3.1.2 The deflagration suppression system shall be disarmed and locked out and tagged out prior to performing maintenance operations on the protected enclosure or suppression system if discharging the suppressant could result in injury.

10.3.1.3 Suppressors protecting unoccupied enclosures shall meet applicable OSHA requirements.

10.3.1.3.1 All suppressors shall be provided with a means to prevent release of stored energy into the protected enclosure.

10.3.1.3.2 The suppression system shall be configured to prevent arming while such means are in place.

10.3.1.3.3 Locks and tagging shall be used to identify suppressors that have such prevention means in place.

10.3.1.4 Operation of the protected process shall be interlocked through the suppression system control panel so that operation cannot be resumed until the suppression system is armed.

10.3.2 Warning Signs.

10.3.2.1 Suppression systems shall be equipped with warning signs indicating that the enclosure is protected with a suppression system.

10.3.2.2 These warning signs shall be applied to suppression system components, the enclosure, or both.

10.4 Basic Design Considerations.

10.4.1 General. The design of a deflagration suppression system shall consider, but shall not be limited to, the following components:

(1) Deflagration characteristics of the combustible material
(2) Identification and design specifications of equipment to be protected
(3) Detection technique(s)
(4) Suppressant type, quantity, and suppressing characteristics
(5) Access to components and ease of maintenance
(6) Deflagration propagation between process vessels
(7) Startup, normal operation, and upset conditions

10.4.2 System Design Certification.

10.4.2.1* System design methodology and application range shall be supported by appropriate testing and certified by a recognized testing organization acceptable to the authority having jurisdiction.

10.4.2.2 The system design shall be based on testing relevant to the application.

10.4.3 Suppression System Design and Operation.

10.4.3.1 Process Analysis.

10.4.3.1.1* The owner or operator shall be responsible for a thorough analysis of the process to determine the type and degree of deflagration hazards inherent in the process.

10.4.3.1.2 Factors such as the type of combustible material, the enclosure internal geometry, the total volume to be protected, and the operating conditions shall be reviewed in detail.

10.4.3.1.3 The potential process malfunctions that could affect the extent of the deflagration hazard shall be determined.

10.4.3.2 The suppression system design shall include, but not be limited to, the following information:

(1) Protection objective
(2) Protected area of the process
(3) Dimensioned plan and elevation drawings of the process with equipment make and model, if available
(4) Pressure resistance of protected enclosures
(5) Internal obstructions of protected enclosure
(6) Startup, normal, shutdown, temporary operations, and emergency shutdown process conditions and ranges for:
    (a) Flow
    (b) Temperature
    (c) Pressure
    (d) Oxidant concentration
    (e) Fuel concentration
(7) Process flow diagram and description
(8) Currently installed protection equipment

Copyright 2014 National Fire Protection Association (NFPA). Licensed, by agreement, for individual use and download on October 4, 2014 to LEADER and READER for designated user PATTARAPORN SRITRAKOOL. No other reproduction or transmission in any form permitted without written permission of NFPA. For inquires or to report unauthorized use, contact licensing@nfpa.org.

(9) Ambient temperature in process area
(10) Explosibility properties of the combustible material
(11) Process interlocks

10.4.3.3 The owner or operator shall disclose any and all process information required for the protection system design.

10.4.3.4 Maintenance and Inspection.

10.4.3.4.1 The owner or operator shall be responsible for the maintenance of the system after installation and acceptance.

10.4.3.4.2 Maintenance records shall be retained for inspection by the authority having jurisdiction in accordance with Section 15.9.

10.4.3.4.3 The owner or operator shall be responsible for periodic inspection of the system by personnel trained by the system manufacturer.

10.4.3.4.4 The inspection frequency shall be in accordance with Section 15.7.

10.4.3.5 Management of Change. The effect of any process change shall be addressed as specified in Section 15.11.

10.4.3.6 All design documentation relevant to the protection system shall be retained in accordance with Chapter 15.

10.4.4 System Manufacturer's Additional Responsibilities.

10.4.4.1* The system manufacturer shall provide the owner or operator with information and documentation that supports the design and is suitable for review by the AHJ.

10.4.4.2 Upon request, the system manufacturer shall provide to the owner or operator documentation supporting that the design is in compliance with the manufacturer's independent third-party approval, including application limitations, and is suitable for the hazard to be protected.

10.4.4.3 The system manufacturer shall provide to the owner or operator design specifications based on the data provided by the owner or operator as specified in 10.4.1.

10.4.4.3.1 Documentation shall be made of the data used in the design.

10.4.4.3.2 The final reduced deflagration pressures shall be provided.

10.4.4.3.3 Method of determination shall be third party approved and available for review by the authority having jurisdiction.

10.4.4.4 The system manufacturer shall provide to the owner or operator mechanical and electrical drawings of the protection system.

10.4.4.5 The system manufacturer shall provide to the owner or operator installation instructions, operating manuals, and maintenance instructions.

10.4.4.6 As part of system acceptance, the system manufacturer and the owner or operator shall document that the installation is in accordance with the design and that the system is armed and functional. *(See Section 15.6.)*

10.4.4.6.1 Variances and any corrective actions shall be identified with the responsible party for any action identified.

10.4.4.6.2 Changes made at or during installation shall be approved by the system manufacturer and the owner or operator and suitably documented.

10.4.4.6.3 Concurrence of the AHJ shall be obtained as appropriate.

10.4.5 Actuation of Other Devices and Systems. The deflagration suppression system shall be permitted to actuate other devices and systems such as high-speed isolation valves, chemical or mechanical isolation devices, or deluge valves as applicable.

10.4.6 Process Shutdown. Upon activation, the suppression system shall initiate an immediate, automatic shutdown of the protected process.

10.4.6.1 Upon receipt of a trouble signal from the suppression system, which indicates the protection system could be compromised, the protected process shall initiate an immediate, automatic, and orderly shutdown.

10.4.6.2 Upon receipt of a supervisory signal from the suppression system, which indicates that a problem exists but that the protection system is not compromised, qualified personnel shall investigate and repair the problem at the next shutdown period.

10.4.6.3 It shall be permitted to manually shut down the protected process in lieu of automatic shutdown when supported by a hazard analysis approved by the AHJ.

10.5 Control Panels.

10.5.1 A control panel with a standby battery backup of no less than 24 hours shall be provided with each suppression system that supplies energy to accomplish the following actions:

(1) Power all detection devices
(2) Energize all electrically operated actuating devices
(3) Energize local visual and audible alarms
(4) Transfer all auxiliary control and alarm contacts
(5) Control system–disabling interlock and process shutdown circuits

10.5.2 The control panel shall, as a minimum, fully and continuously supervise the following components:

(1) Wiring circuits for opens and other faults
(2) ac power supply (primary)
(3) Battery voltage, presence, and polarity
(4) System safety interlock circuitry
(5) System-disabling interlock circuitry, including lockout and tagout status
(6) Releasing outputs
(7) Electrically operated actuating devices
(8) Detection devices
(9) Local visual and audible alarms
(10) Circuit ground fault
(11) Suppressor pressure indicators

10.5.2.1 The minimum number of detection devices shall be either one device that is a transducer with a continuously monitored process parameter output, or two devices that are switches or transducers that are not continuously monitored, where the two switches are connected such that an alarm condition on either switch will activate the system.

10.5.2.2* Additional detection devices shall be permitted for the purpose of reducing spurious failures.

10.5.3* The supervisory circuits in 10.5.2 shall be provided with a visual and an audible signal.

Copyright 2014 National Fire Protection Association (NFPA). Licensed, by agreement, for individual use and download on October 4, 2014 to LEADER and READER for designated user PATTARAPORN SRITRAKOOL. No other reproduction or transmission in any form permitted without written permission of NFPA. For inquires or to report unauthorized use, contact licensing@nfpa.org.

10.5.4 Control panel contacts shall be provided that enable the owner or operator to initiate an orderly, automatic shutdown of the process and protection system should unauthorized entry of a protected enclosure be attempted.

10.6 Detection Devices.

10.6.1* The deflagration shall be detected by the sensing of one or more of a specified pressure, a specified rate of pressure rise, a vent burst, or the radiant energy from the combustion process.

10.6.2 Provisions shall be made to minimize obscuration of radiant energy detectors.

10.6.3 Detection devices shall be located to minimize accumulation of foreign material that would affect functioning.

10.6.4 Detection devices shall be mounted so that their maximum temperature rating, as specified by the manufacturer, is not exceeded.

10.7 Electrically Operated Actuating Devices.

10.7.1* Electrically operated actuating devices shall be mounted so that their maximum temperature rating, as specified by the manufacturer, is not exceeded.

10.7.2 The operating characteristics of the as-installed actuating device circuits shall be within the manufacturer's specifications.

10.8* Suppressant and Suppressant Storage Containers.

10.8.1* The suppressant shall be compatible with the combustible material in the protected enclosure.

10.8.2 The suppressant shall be effective at the expected extremes of temperature encountered in the protected enclosure.

10.8.3 If agent storage container pressure falls below the manufacturer's required level, a trouble signal shall be sent to the control unit indicating a disabled protection system.

10.8.4 Suppressant storage containers, if used as pressurized shipping containers, shall be designed to meet the requirements of the U.S. Department of Transportation, 49 CFR Part 173.24.

10.8.5 Suppressant storage containers, if not used as pressurized shipping containers, shall be designed, fabricated, inspected, certified, and stamped in accordance with Section VIII of the ASME *Boiler and Pressure Vessel Code*.

10.8.6 The design pressure shall be suitable for the maximum pressure developed at 55°C (130°F) or at the maximum controlled temperature limit.

Chapter 11 Deflagration Control by Active Isolation

11.1 Application.

11.1.1* The technique of deflagration isolation shall be permitted for interruption or mitigation of flame, deflagration pressures, pressure piling, and flame-jet ignition between enclosures that are interconnected by pipes or ducts.

11.1.2* Isolation techniques may be active, which requires detection, control, and a pneumatic or electrical response that creates an isolating barrier; or passive, which responds to the deflagration pressure to create the isolating barrier.

11.1.3 Active isolation system design shall be permitted to be based on various techniques that include, but are not limited to, the use of the following equipment:

(1) Flame front extinguishing system (chemical isolation)
(2) Fast-acting mechanical valve (explosion isolation valves)
(3) Actuated float valve
(4) Actuated pinch valve

11.1.4 The isolation system type shall be of a design that has been tested under deflagration conditions to verify performance.

11.1.5* The detection conditions, and the positioning of the detection points and the minimum and maximum barrier locations shall be based on a quantitative analysis that includes factors such as, but not limited to, the following parameters:

(1) The entire range of flammable concentrations
(2) Time required for detection for the least-sensitive and the most-sensitive mixtures
(3) Possible ignition locations in the primary enclosure
(4) Time required for barrier formation
(5) Flame speeds and pressures expected in the pipe
(6) Time of flame front propagation to the barrier position
(7) Flow velocity

11.1.6 Piping, ducts, and enclosures protected by an isolation system shall be designed to withstand estimated pressures as provided by the isolation system manufacturer.

11.2* Isolation Techniques. Isolation methods shall be permitted to be used to interrupt or mitigate flame propagation, deflagration pressure, pressure piling, and flame-jet ignition between items of equipment. Active isolation systems shall be permitted to be based on various techniques that include, but are not limited to, the use of the following components:

(1) Chemical barrier
(2) Fast-acting mechanical valve
(3) Externally actuated float valve
(4) Actuated pinch valve

11.2.1 Chemical Barrier.

11.2.1.1* The function of a chemical isolation system is to inject a barrier of extinguishing agent into the interconnection prior to the arrival of the flame front.

11.2.1.2 The chemical isolation system shall consist of one or more detectors, a control panel, and agent injection equipment.

11.2.1.2.1 Actuation shall be based on detection of pressure or radiant energy with a control panel to provide the initiating signal to the agent containers.

11.2.1.2.2 The agent containers shall be fitted with a fast-acting release that permits injection of agent within milliseconds of receiving the initiating signal.

11.2.1.2.3 Agent containers shall be designed to discharge the agent rapidly.

11.2.1.2.4 The size and number of containers shall be selected to provide the required barrier.

11.2.1.3 The isolation design shall include all information required to install and operate the system, including the following information:

(1) Detection specification of activation pressure or pressure rate of rise
(2) Detector location requirements and limits for pressure or optical detection

Copyright 2014 National Fire Protection Association (NFPA). Licensed, by agreement, for individual use and download on October 4, 2014 to LEADER and READER for designated user PATTARAPORN SRITRAKOOL. No other reproduction or transmission in any form permitted without written permission of NFPA. For inquires or to report unauthorized use, contact licensing@nfpa.org.

(3) Minimum placement location for agent container(s) relative to the protected volume or detector location
(4) Maximum placement location for agent container(s) relative to the protected volume or detector location
(5) Required distance downstream of agent container(s)
(6) Agent identity and minimum container pressure at ambient conditions
(7) Size, number, and orientation of agent container(s)
(8) Maximum process and ambient temperature

11.2.1.4 Extinguishing Agents and Containers.

11.2.1.4.1 The extinguishing agent shall be chemically compatible with the material normally conveyed through the pipe system being protected.

11.2.1.4.2 The extinguishing agent shall be of a type that is effective at all temperatures that are to be encountered in the application.

11.2.1.4.3* Extinguishing agent containers, if used as shipping containers, shall be designed to meet the requirements of the U.S. Department of Transportation, 49 CFR Part 173.24.

11.2.1.4.4 If not used as shipping containers, extinguishing agent containers shall be designed, fabricated, inspected, certified, and stamped in accordance with Section VIII of the ASME *Boiler and Pressure Vessel Code*.

11.2.1.4.5 The design pressure shall be suitable for the maximum pressure developed at 55°C (130°F) or at the maximum controlled temperature limit.

11.2.1.5 Limitations. The specific application limitations created by equipment performance specifications and process conditions shall not be exceeded. These limitations include the following:

(1) Minimum and maximum distance of a barrier from the duct entrance
(2) Process flow rates
(3) Direction of flow
(4) Flow resistance
(5) $P_{detection}$ less than P_{stat} when the enclosure is vented
(6) Process temperature and pressure

11.2.1.6 Chemical isolation system components exposed to the process environment shall be capable of withstanding the maximum expected deflagration pressure.

11.2.2* Fast-Acting Mechanical Valves.

11.2.2.1 Fast-acting mechanical valves shall prevent propagation of flame and combustion-generated pressure beyond the fast-acting valves by providing a positive mechanical seal. The mechanical valve shall be capable of withstanding the maximum expected deflagration pressures, including pressure piling.

11.2.2.2* The mechanical isolation system shall consist of one or more detectors, a control panel, and a fast-acting valve assembly.

11.2.2.2.1 Actuation shall be based on detection of pressure or radiant energy with a control panel, to provide the initiating signal to the mechanical valve.

11.2.2.2.2 The mechanical valve assembly shall include a means of rapidly moving the valve trim.

11.2.2.3 The isolation design shall include all information required to install and operate the system, including the following information:

(1) Detection specification of activation pressure or rate for pressure detection
(2) Detector location requirements and limits for pressure or optical detection
(3) Minimum placement location for mechanical valve relative to the protected volume or detector location
(4) Maximum placement location for mechanical valve relative to the protected volume or detector location
(5) Maximum process and ambient temperature
(6) Minimum actuation pressure

11.2.2.4 Limitations. The specific application limitations created by equipment performance specifications and process conditions shall not be exceeded. These limitations include the following:

(1) Minimum and maximum distance of a valve from the duct entrance
(2) Process flow rates
(3) Direction of flow
(4) Orientation of the valve
(5) Flow resistance
(6) $P_{detection}$ less than P_{stat} when the enclosure is vented
(7) Process temperature

11.2.2.5* Mechanical isolation system components exposed to the process environment shall be capable of withstanding the maximum expected deflagration pressure, including pressure piling.

11.2.3 Externally Actuated Float Valve.

11.2.3.1* The externally actuated float valve shall isolate the explosion by means of a moveable valve plug pressing upon a valve seat.

11.2.3.2* The float valve shall be actuated and caused to move by pneumatic discharge from a pressurized container, by the discharge of a gas generator into a pneumatic cylinder connected to the float, or by other high-speed actuation means.

11.2.3.3 The externally actuated float valve system shall consist of one or more detectors, a control panel, a float valve, and a pressure container or gas generator actuation device.

11.2.3.3.1 Actuation shall be based on detection of pressure or radiant energy with a control panel to provide the initiating signal to the actuator.

11.2.3.3.2 When used, the container shall be pressurized with gas to close the float valve rapidly and completely.

11.2.3.4* The isolation design shall include all information required to install and operate the system, including the following:

(1) Detection specification of activation pressure or rate of pressure rise
(2) Detector location requirements and limits for pressure or optical detection
(3) Minimum placement location for float valve relative to the protected volume or detector location
(4) Maximum placement location for float valve relative to the protected volume or detector location
(5) Maximum process and ambient temperature
(6) Maximum and minimum process flow rate
(7) Maximum permissible dust loading
(8) Minimum actuation pressure

Copyright 2014 National Fire Protection Association (NFPA). Licensed, by agreement, for individual use and download on October 4, 2014 to LEADER and READER for designated user PATTARAPORN SRITRAKOOL. No other reproduction or transmission in any form permitted without written permission of NFPA. For inquires or to report unauthorized use, contact licensing@nfpa.org.

11.2.3.5 Limitations. The specific application limitations created by equipment performance specifications and process conditions shall not be exceeded. These limitations include the following:

(1) Minimum and maximum distance of a valve from the duct entrance
(2) Process flow rates
(3) Direction of flow
(4) Orientation of the valve
(5) Flow resistance
(6) $P_{detection}$ less than P_{stat} when the enclosure is vented
(7)*Process temperature and pressure

11.2.4 Actuated Pinch Valve.

11.2.4.1* The pinch valve shall isolate the explosion by means of a collapsible elastomer pinch.

11.2.4.2* The pinch valve shall be actuated and caused to close by gas discharge from a pressurized cylinder connected to the pinch.

11.2.4.3 The actuated pinch valve system shall consist of one or more detectors, a control panel, a pinch valve, and a pressure cylinder.

11.2.4.3.1 Actuation shall be based on detection of pressure or radiant energy with a control panel, to provide the initiating signal to the actuator.

11.2.4.3.2 The container shall be pressurized with gas sufficient to close the pinch valve rapidly and completely.

11.2.4.4 The isolation design shall include all information required to install and operate the system, including the following:

(1) Detection specification of activation pressure or rate of pressure rise
(2) Detector location requirements and limits for pressure or optical detection
(3) Minimum placement location for pinch valve relative to the protected volume or detector location
(4) Maximum placement location for pinch valve relative to the protected volume or detector location
(5) Maximum process and ambient temperature
(6) Maximum and minimum process flow rates
(7)*Maximum permissible dust loading
(8) Minimum actuation pressure

11.2.4.5 Limitations. The specific application limitations created by equipment performance specifications and process conditions shall not be exceeded. These limitations include the following:

(1) Minimum and maximum distance of a valve from the duct entrance
(2) Process and ambient temperatures
(3) $P_{detection}$ less than P_{stat} when the enclosure is vented
(4) Process flow rates
(5) Maximum deflagration pressure

11.2.4.6 Where the normal operation of the equipment is under vacuum, the pinch valve shall be configured with an equalization line to avoid pinch infringement into the process flow stream.

11.3 Personnel Safety.

11.3.1 The safety of personnel working with and around explosion prevention equipment shall be addressed as specified in Section 15.10.

11.3.2* Disarming and Lockout/Tagout Procedures.

11.3.2.1 Disarming and OSHA lockout/tagout procedures (29 CFR 1910.147) and confined space entry procedures (29 CFR 1910.146), or local country equivalent, shall be followed prior to entering an enclosure or ductwork protected by an isolation system.

11.3.2.2 The isolation system shall be disarmed and locked out/tagged out prior to performing maintenance operations on the protected enclosure, ducting, or isolation system if actuation could result in injury.

11.3.2.3 Isolation systems shall meet applicable OSHA requirements.

11.3.2.3.1 Isolation systems shall be provided with a means to prevent release of stored energy.

11.3.2.3.2 The system shall be configured to prevent arming while such means are in place.

11.3.2.3.3 Locks and tagging shall be used to identify systems that have such prevention means in place.

11.3.2.4 Operation of the protected process shall be interlocked through the isolation system control panel so that operation cannot be resumed until the isolation system is armed.

11.4 Basic Design and Operation.

11.4.1 System Design Certification.

11.4.1.1 System design methodology and application range shall have been supported by appropriate testing and certified by a recognized testing organization acceptable to the authority having jurisdiction. *(See A.10.4.2.1.)*

11.4.1.2 The system design methodology shall be based on testing relevant to the isolation system.

11.4.1.3 Chemical (Barrier) Isolation. The system testing shall consider, but not be limited to, the following design factors or performance measures:

(1) Flame propagation behavior for relevant system conditions
(2) Detection parameters for specific placement locations, with consideration given to the potential range of fuels, ignition locations, and detector type
(3) Barrier formation dynamics, including duration
(4) Agent (barrier) concentration or quantity requirement
(5) Minimum and maximum barrier locations from the equipment
(6) Post-barrier extinguishing distance
(7) Pressure at barrier placement

11.4.1.4 Mechanical Isolation. The system testing shall consider, but not be limited to, the following design factors or performance measures:

(1) Flame propagation behavior for relevant system conditions
(2) Detection parameters for specific placement locations, with consideration given to the potential range of fuels, ignition locations, and detector type
(3) Activation dynamics of the closure
(4) Minimum and maximum placements
(5) Pressure at valve placement
(6) Pressure limitation of hardware

11.4.1.5 Actuated Float Valve. The system testing shall consider, but not be limited to, the following design factors or performance measures:

(1) Flame propagation behavior for relevant system conditions
(2) Detection parameters for specific placement locations, with consideration given to the potential range of fuels, ignition locations, and detector type

Copyright 2014 National Fire Protection Association (NFPA). Licensed, by agreement, for individual use and download on October 4, 2014 to LEADER and READER for designated user PATTARAPORN SRITRAKOOL. No other reproduction or transmission in any form permitted without written permission of NFPA. For inquires or to report unauthorized use, contact licensing@nfpa.org.

(3) Activation dynamics of the closure
(4) Minimum and maximum placements
(5) Pressure at valve placement
(6) Pressure limitation of hardware

11.4.1.6 Actuated Pinch Valve. The system testing shall consider, but not be limited to, the following design factors or performance measures:

(1) Flame propagation behavior for relevant system conditions
(2) Detection parameters for specific placement locations, with consideration given to the potential range of fuels, ignition locations, and detector type
(3) Activation dynamics of the closure
(4) Minimum and maximum placements
(5) Pressure at valve placement
(6) Pressure limitation of hardware

11.4.2 Protection System Design and Operation.

11.4.2.1* The owner or operator shall be responsible for a thorough analysis of the process that shall be conducted to determine the type and degree of deflagration hazards inherent in the process.

11.4.2.2 The information required for the isolation design shall include, but not be limited to, the following:

(1) Protection objective
(2) Protected area of the process
(3) Dimensioned drawings of the process with equipment make and model if available, including volumes and diameters and design strengths
(4) Plan and elevation views with flows indicated
(5) Startup, normal, shutdown, temporary operations, and emergency shutdown process conditions and ranges for:
    (a) Flow
    (b) Temperature
    (c) Pressure
    (d) Oxidant concentration
    (e) Fuel concentration
(6) Process flow diagram and description
(7) Previously installed protection equipment
(8) Ambient temperature in process area
(9) Explosibility properties of the combustible materials
(10) Process interlocks

11.4.2.3 The owner or operator shall disclose any and all process information required for the protection system design.

11.4.2.4 Maintenance.

11.4.2.4.1 The owner or operator shall be responsible for the maintenance of the system after installation and acceptance based on procedures provided by the vendor.

11.4.2.4.2 Maintenance records shall be retained for inspection by the authority having jurisdiction in accordance with Section 15.9.

11.4.2.5 Inspection.

11.4.2.5.1 The owner or operator shall be responsible for periodic inspection of the system by personnel trained by the system manufacturer.

11.4.2.5.2 The inspection frequency shall be in accordance with Section 15.7.

11.4.2.6 Management of Change. The effect of any process change shall be addressed as specified in Section 15.11.

11.4.2.7 All design documentation relevant to the protection system shall be retained in accordance with Chapter 15.

11.4.3* System Manufacturer's Additional Responsibilities. The system manufacturer shall provide the owner or operator with information and documentation that supports the design and that is suitable for review by the AHJ.

11.4.3.1 Upon request, the system manufacturer shall provide to the owner or operator documentation supporting that the design is in compliance with the manufacturer's independent third-party approval, including application limitations, and is suitable for the hazard to be protected.

11.4.3.2 The system manufacturer shall provide to the owner or operator design specifications based on the data provided by the owner or operator as specified in 11.4.2.2.

11.4.3.2.1 Documentation shall be made of the data used in the design.

11.4.3.2.2 The final reduced deflagration pressures shall be provided.

11.4.3.2.3 Method of determination shall be third party approved and available for review by the authority having jurisdiction.

11.4.3.3 The system manufacturer shall provide to the owner or operator mechanical and electrical drawings of the protection system.

11.4.3.4 The system manufacturer shall provide to the owner or operator installation instructions, operating manuals, and maintenance instructions.

11.4.3.5 As part of system acceptance, the system manufacturer and the owner or operator shall document that the installation is in accordance with the design and the system is armed and functional. *(See Section 15.6.)*

11.4.3.5.1 Variances and any corrective actions shall be identified with the responsible party for any action identified.

11.4.3.5.2 Changes made at or during installation shall be approved by the system manufacturer and owner or operator and suitably documented.

11.4.3.5.3 Concurrence of the AHJ shall be obtained as appropriate.

11.4.4 Process Shutdown. Upon activation, the isolation system shall initiate an immediate, automatic shutdown of the protected process.

11.4.4.1 Upon receipt of a trouble signal from the isolation system, the protected process shall initiate an immediate, automatic, and orderly shutdown.

11.4.4.2 The owner or operator shall be permitted to manually shut down the protected process in lieu of automatic shutdown when supported by a hazard analysis approved by the AHJ.

11.4.5 Installation, Inspection, and Maintenance. The installation, inspection, and maintenance of explosion prevention systems shall be addressed as specified in Chapter 15.

11.5 Detection Devices.

11.5.1* The deflagration shall be detected by sensing one or more of a specified pressure, a specified rate of pressure rise, a vent burst, or the radiant energy from the combustion process.

Copyright 2014 National Fire Protection Association (NFPA). Licensed, by agreement, for individual use and download on October 4, 2014 to LEADER and READER for designated user PATTARAPORN SRITRAKOOL. No other reproduction or transmission in any form permitted without written permission of NFPA. For inquires or to report unauthorized use, contact licensing@nfpa.org.

11.5.2 Provisions shall be made to minimize obscuration of radiant energy detectors.

11.5.3 Detection devices shall be located to minimize accumulation of foreign material that would affect functioning.

11.5.4 Detection devices shall be mounted so that their maximum temperature rating, as specified by the manufacturer, is not exceeded.

11.6 Electrically Operated Actuating Devices.

11.6.1* Electrically operated actuating devices shall be mounted so that their maximum temperature rating, as specified by the manufacturer, is not exceeded.

11.7 Control Panels.

11.7.1 A control panel with a standby battery backup of no less than 24 hours shall be provided with each isolation system that supplies energy to accomplish the following actions:

(1) Power all detection devices
(2) Energize all electrically operated actuating devices
(3) Energize local visual and audible alarms
(4) Transfer all auxiliary control and alarm contacts
(5) Control system-disabling interlock and process shutdown circuits

11.7.2 The control panel shall, as a minimum, fully and continuously supervise the following conditions:

(1) Wiring circuits for opens and other faults
(2) AC power supply (primary)
(3) Battery voltage, presence, and polarity
(4) System safety interlock circuitry
(5) System-disabling interlock circuitry including lockout and tagout status
(6) Releasing outputs
(7) Electrically operated actuating devices
(8) Detection devices
(9) Local visual and audible alarms
(10) Circuit ground fault
(11) Isolation container pressure indicators

11.7.3* The supervisory circuits in 11.7.2 shall be provided with visual and audible signals.

11.7.4 Control panel contacts shall be provided that enable the owner or operator to initiate an orderly, automatic shutdown of the process and protection system should unauthorized entry of a protected enclosure be attempted.

11.7.5 If a pressurized container pressure falls below manufacturer's required level, a trouble signal shall be sent to the control unit indicating a disabled protection system.

Chapter 12 Deflagration Control by Passive Isolation

12.1* Application.

12.1.1* The technique of deflagration isolation by passive means shall be permitted for interruption or mitigation of flame, deflagration pressures, pressure piling, and flame-jet ignition between enclosures that are interconnected by pipes or ducts.

12.1.2 Piping, ducts, and enclosures protected by an isolation system shall be designed to withstand estimated pressures as provided by the isolation system manufacturer.

12.2 Passive Isolation Techniques. Passive isolation system design shall be permitted to be based on various techniques that include, but are not limited to, the use of the following equipment:

(1) Flame front diverters
(2) Passive float valves
(3) Passive flap valves
(4) Material chokes (rotary valves)
(5) Static dry flame arresters
(6) Hydraulic (liquid seal)–type flame arresters
(7) Liquid product flame arresters

12.2.1* Flame Front Diverters.

12.2.1.1* Different Types of Flame Front Diverters. Flame front diverters shall be permitted to be any of the following types:

(1) Rupture disc diverters
(2) Explosion door diverters
(3) Self-closing explosion door diverters

12.2.1.2 Basic System Design Considerations. The design of a flame front diverter system shall consider, but shall not be limited to, the following criteria:

(1) Deflagration characteristics of the combustible material
(2) Type of deflagration protection used on the upstream enclosure, if any
(3) Length, cross-sectional area, configuration, and strength of the piping
(4) Turbulence-generating features in the piping such as fittings, valves, elbows, and wall roughness
(5) Velocity of the combustible fuel–air mixture in the pipe
(6) Location of the flame front diverter relative to the protected downstream enclosure
(7) Location of probable ignition sources

12.2.1.3 Flame Front Diverter Design Requirements.

12.2.1.3.1 The body design shall divert the flame front to atmosphere and away from the downstream piping.

12.2.1.3.2 The body shall be capable of withstanding the expected deflagration pressure.

12.2.1.3.3 The closure device shall be a rupture disc, cover plate, or door.

12.2.1.3.4 The opening pressure of the closure device shall be less than 100 mbar (1.74 psi).

12.2.1.3.5 Where the closure device could be a missile hazard, it shall be either tethered or contained in a cage.

12.2.1.3.6 The flame front diverter shall discharge to a safe, unrestricted, outdoor location, and the discharge shall not be obstructed.

12.2.1.3.7 Flame front diverters shall be marked with respect to the direction of deflagration propagation.

12.2.1.4 System Certification. The flame front diverter system design methodology and application range shall be supported by appropriate testing and certified by a recognized testing organization acceptable to the authority having jurisdiction. *(See A.10.4.2.1.)*

12.2.1.4.1* A performance demonstration shall include a determination that the device is capable of maintaining mechanical integrity under expected deflagration conditions and of limiting pressure piling in the downstream protected equipment.

Copyright 2014 National Fire Protection Association (NFPA). Licensed, by agreement, for individual use and download on October 4, 2014 to LEADER and READER for designated user PATTARAPORN SRITRAKOOL. No other reproduction or transmission in any form permitted without written permission of NFPA. For inquires or to report unauthorized use, contact licensing@nfpa.org.

12.2.1.4.2 Upon request, the system manufacturer shall provide to the owner or operator documentation supporting that the design is in compliance with the manufacturer's independent third-party approval, including application limitations, and is suitable for the hazard to be protected.

12.2.1.5 Flame Front Diverter Application Limits. Flame front diverter limitations shall include, but not be limited to, the following:

(1) A flame front diverter shall not be permitted as the only means of isolation if the design intent is to completely stop flame propagation.
(2) A flame front diverter shall not be permitted to be used for gases where the piping configuration could result in transition to detonation.
(3) A flame front diverter shall not be permitted to be used with toxic process materials.
(4) A flame front diverter shall be located outdoors.

12.2.2* Flow-Actuated Float Valve. The interior of this valve shall be designed to contain a valve plug (float) that can be moved axially within its housing. If an explosion (deflagration) occurs, the valve shall close automatically because of the pressure wave preceding the flame front.

12.2.2.1* Flow-Actuated Float Valve Design. Float valve system design shall include the following considerations:

(1) Deflagration characteristics of the combustible material
(2) Volume, configuration, and operating characteristics of the equipment to be protected and the conveying system
(3) Type of deflagration protection used on the enclosure, if any
(4) Length, cross-sectional area, configuration, and strength of the piping
(5) Turbulence-generating features in the piping such as fittings, valves, elbows, and wall roughness
(6) Velocity of the combustible fuel–air mixture in the pipe
(7) Location of probable ignition sources
(8) Anticipated differential pressure across the valve during deflagration
(9) Normal process flow velocity and direction at the valve location
(10) Orientation of the valve

12.2.2.2 Float Valve Design Criteria. Float valve design criteria shall comply with 12.2.2.2.1 through 12.2.2.2.4.

12.2.2.2.1 The anticipated differential pressure across the valve during deflagration, as determined by the valve manufacturer, shall be greater than the float valve closing pressure.

12.2.2.2.2 The normal process flow velocity at the valve shall be less than the specified limit for the float valve closure.

12.2.2.2.3 The valve shall include a means to latch it in the closed position upon actuation.

12.2.2.2.4 A signal shall be provided that indicates the valve is in the closed position.

12.2.2.3 System Certification. The float valve deflagration isolation system design methodology and application range shall be supported by appropriate testing and certified by a recognized testing organization acceptable to the authority having jurisdiction. *(See A.10.4.2.1.)*

12.2.2.3.1 A performance demonstration shall include the required minimum and maximum location placement distances from the expected ignition source and the range of allowable P_{red} for the enclosure where the ignition might occur.

12.2.2.3.2 Upon request, the system manufacturer shall provide to the owner or operator documentation supporting that the design is in compliance with the manufacturer's independent third-party approval, including application limitations, and is suitable for the hazard to be protected

12.2.2.4* Float Valve Application Limits. Float valves shall not be permitted to be used under the following circumstances:

(1) With slow propagating explosions, below the limits of the test data (Bartknecht, 1989)
(2) In a stream containing significant quantities of accumulating dust, as specified by the manufacturer

12.2.3 Flow-Actuated Flap Valve. The flap valve shall be mounted on the inlet conveying duct of a protected vessel and open in the direction of process flow.

12.2.3.1 The interior of the flap valve shall be designed to contain a flap plate on a perpendicular shaft that can be turned within its housing.

12.2.3.2 If an explosion (deflagration) occurs, the valve shall close automatically as a result of the pressure wave preceding the flame front.

12.2.3.3 Flow-Actuated Flap Valve Design. Flap valve system design shall include the following considerations:

(1) Deflagration characteristics of the combustible material
(2) Volume, configuration, and operating characteristics of the equipment to be protected and the conveying system
(3) Type of deflagration protection used on the enclosure, if any
(4) Material loading in the conveying duct
(5) Material physical properties (i.e., abrasiveness, adhesiveness, etc.)
(6) Length, cross-sectional area, configuration, and strength of the piping
(7) Turbulence generating-features in the piping, such as fittings, valves, elbows, and wall roughness
(8) Velocity of the combustible dust/air mixture in the pipe
(9) Location of probable ignition sources
(10) Normal process flow velocity and direction at the valve location
(11) Orientation of the valve
(12) Maximum allowable reduced explosion pressure of the valve

12.2.3.4 Flow-Actuated Flap Valve Design Criteria. Flap valve design criteria shall comply with 12.2.3.4.1 to 12.2.3.4.6.

12.2.3.4.1 The anticipated differential pressure across the valve during deflagration, as determined by the valve manufacturer, shall be greater than the flap valve closing pressure.

12.2.3.4.2 Upon actuation from a deflagration pressure wave, the flap plate shall close and remain sealed via a locking mechanism to prevent flame and burning material propagation.

12.2.3.4.3 The flap valve shall have an inspection door to allow periodic inspection of the flap plate and seal.

12.2.3.4.4 Upon activation, the flap valve shall initiate an immediate, automatic shutdown of the protected process.

12.2.3.4.5 A continuous signal shall be provided to ensure that valve operation is not compromised by the accumulation of a dust layer on the bottom interior of the valve.

Copyright 2014 National Fire Protection Association (NFPA). Licensed, by agreement, for individual use and download on October 4, 2014 to LEADER and READER for designated user PATTARAPORN SRITRAKOOL. No other reproduction or transmission in any form permitted without written permission of NFPA. For inquires or to report unauthorized use, contact licensing@nfpa.org.

12.2.3.4.5.1 Upon receipt of a signal indicating that the flap valve could be compromised, the protected process shall initiate an immediate, automatic, and orderly shutdown.

12.2.3.4.5.2 A documented risk assessment and an appropriate inspection protocol and frequency shall be permitted in lieu of the continuous signal in 12.2.3.4.5, where acceptable to the authority having jurisdiction.

12.2.3.4.6* The conveying ductwork between the protected vessel and the flap valve shall be of sufficient strength to withstand the expected peak pressure.

12.2.3.5 System Certification. The flow-actuated flap valve deflagration isolation system design methodology and application range shall be supported by appropriate testing and certified by a recognized testing organization acceptable to the authority having jurisdiction. (*See A.10.4.2.1.)*

12.2.3.5.1 A performance demonstration shall determine the following:

(1) Minimum and maximum location placement distances from the expected ignition source
(2) Minimum and maximum K_{st}
(3) Maximum number of flow direction changes
(4) Maximum dust loading
(5) Maximum air velocity
(6) Range of allowable P_{red} within the protected enclosure where the ignition might occur

12.2.3.5.2 Upon request, the system manufacturer shall provide to the owner or operator documentation supporting that the design is in compliance with the manufacturer's independent third-party approval, including application limitations, and is suitable for the hazard to be protected.

12.2.3.6 Flow-Actuated Flap Valve Application Limits. Flap valves shall not be permitted to be used under the following circumstances:

(1) With slow propagating explosions, below the limits of the test data
(2) In a stream containing significant quantities of agglomerating dust, as specified by the manufacturer
(3) In a stream containing flammable gases/vapors or hybrid mixtures
(4) In a stream containing chemically unstable material
(5) In a stream containing pyrotechnic or explosive material
(6) In a dense phase conveying stream

12.2.4* Material Chokes (Rotary Valves). Material chokes shall be permitted to be used as isolation devices for processes handling dusts.

12.2.4.1* Rotary Valve System Design Considerations. Rotary valve system design considerations shall include the following:

(1) Deflagration characteristics of the combustible material
(2) Volume, configuration, and operating characteristics of the equipment to be protected and the conveying system
(3) Type of deflagration protection used on the vessel
(4) Maximum deflagration pressure that the rotary valve will experience

12.2.4.2 Rotary Valve Design Criteria. Rotary valves intended for deflagration isolation systems shall be designed according to one of the following isolation concepts:

(1) Deflagration isolation by flame quenching (close-clearance valves)
(2) Deflagration isolation by material blocking (product layer above the valve)

12.2.4.3* The design criteria in 12.2.4.3.1 through 12.2.4.3.9 shall be applicable to either concept defined in 12.2.4.2.

12.2.4.3.1 The valve body and rotor shall have sufficient strength to withstand the maximum anticipated explosion pressure, P_{red}.

12.2.4.3.2 The design basis shall include the specific explosion characteristics (K_{St} and P_{max}) of the powder being handled.

12.2.4.3.3 The valve pressure resistance shall be certified or tested by a knowledgeable test authority.

12.2.4.3.4 There shall be at least six vanes on the rotor, diametrically opposed.

12.2.4.3.5 At least two vanes on each side of the valve housing shall be in a position of minimum clearance at all times.

12.2.4.3.6 The valve shall have metal body and vanes unless it is shown by test data that nonmetallic or composite materials prevent flame passage.

12.2.4.3.7 Rotary valve bearings shall be mounted externally.

12.2.4.3.8 An independent explosion detection device or interlock from another installed explosion prevention or control system on the same protected enclosure shall be interlocked to automatically stop the rotary valve upon a deflagration event.

12.2.4.3.9 The need for performance testing of the valve design shall be determined by the authority having jurisdiction.

12.2.4.4* Rotary Valve with Material Blocking.

12.2.4.4.1 A material block shall be maintained above rotary valves with a design clearance between vane and valve body greater than 0.2 mm (0.0079 in.).

12.2.4.4.2 A level control switch shall be provided and interlocked to the rotary valve to maintain a minimum material layer above the valve inlet flange.

12.2.4.4.3 The minimum maintained material level above the inlet flange shall be at least equal to the larger of the valve inlet equivalent diameter or 0.3 m (1 ft).

12.2.4.5* Close-Clearance Rotary Valves.

12.2.4.5.1 Close-clearance rotary valves shall be designed with a clearance between vane and valve body of = 0.2 mm (0.0079 in.).

12.2.4.5.2 The clearance between vane and valve body shall be small enough to prevent the passage of flame between the rotor and valve housing.

12.2.4.5.3 Actual clearance of such rotary valves shall be measured before installation and monitored using a predictive maintenance program such that the design clearance is not exceeded due to wear.

12.2.4.6 Rotary Valve Application Limits. Rotary valves shall not be permitted to be used as an isolation device for systems handling hybrid mixtures or gases.

12.2.5* Static Dry Flame Arresters.

12.2.5.1 General Application. This section shall not apply to the following equipment:

(1) Devices that utilize a liquid-type flame arrester to prevent the passage of flame

Copyright 2014 National Fire Protection Association (NFPA). Licensed, by agreement, for individual use and download on October 4, 2014 to LEADER and READER for designated user PATTARAPORN SRITRAKOOL. No other reproduction or transmission in any form permitted without written permission of NFPA. For inquires or to report unauthorized use, contact licensing@nfpa.org.

(2) Devices that rely on gas flow velocity to prevent upstream propagation of flame
(3) Systems handling combustible dusts

12.2.5.2* Static Dry Flame Arrester Designs. For the purposes of this subsection, flame arresters shall be divided into the following groups:

(1) In-line deflagration arrester
(2) In-line stable detonation arrester
(3) In-line unstable detonation arrester
(4) End-of-line deflagration arrester
(5) In-equipment deflagration arrester

12.2.5.3 Static Flame Arrester System Design Considerations. Static flame arrester system design considerations shall include the following:

(1) Deflagration characteristics of the combustible material, including the maximum experimental safe gap (MESG)
(2) Length, cross-sectional area, configuration, and strength of the piping on the unprotected side of the flame arrester (ignition source)
(3) Turbulence-generating features in the piping on the unprotected side such as fittings, valves, elbows, and wall roughness
(4) Location of probable ignition sources
(5) Potential for continued burning
(6) Arrester orientation
(7) Process conditions during startup, normal operation, and shutdown

12.2.5.4* Static Dry Flame Arrester Design Criteria. Static dry flame arrester systems shall be designed according to the criteria in 12.2.5.4.1 through 12.2.5.4.16.

12.2.5.4.1 Flame arresters shall be placed in the potential flame path between the source of ignition and the system to be protected.

12.2.5.4.2 The maximum allowable distance from the ignition source shall be documented in an independent third-party approval and in the maintenance and instruction manuals.

12.2.5.4.3 Static dry flame arresters shall consist of a flame arrester element(s) in a housing.

12.2.5.4.4 Flame arresters shall be installed and maintained in accordance with the manufacturer's instructions.

12.2.5.4.5 In-line arresters that can experience continued burning for a time longer than that for which they were tested or that are installed in a different orientation than in the approval test (i.e., an arrester that has undergone continuous-burning test in a upright position with one end open to atmosphere, but that is actually installed horizontally in a closed piping system) shall meet the criteria in 12.2.5.4.5.1 through 12.2.5.4.5.4.

12.2.5.4.5.1 A means of detecting the burning shall be provided on both sides of the arrester along with an alarm or automatic device to interrupt flow prior to failure.

12.2.5.4.5.2* The response time for shutoff shall not extend beyond 1 minute.

12.2.5.4.5.3 The shutoff temperature selected shall be determined on a case-by- case basis by, but not limited to, the following criteria:

(1) The normal operating temperature of the vapor stream
(2) The maximum operating temperature of the vapor stream
(3) The vapor with the lowest autoignition temperature in the vapor stream

12.2.5.4.5.4 If thermocouples are used, they shall not be placed in thermowells unless specifically tested in that configuration.

12.2.5.4.6 The pipe diameter on the unprotected side shall be no larger than the flame arrester inlet connection within 120 times the length-to-diameter ratio of the arrester inlet.

12.2.5.4.7 The pipe diameter on the protected side shall be no less than the pipe diameter on the unprotected side, unless tested with a restriction on the protected side.

12.2.5.4.8 Continuous monitoring of pressure drop shall be provided if the process is known to contain particulates or substances that may block the element and overpressurize the system.

12.2.5.4.9 Suitability of a flame arrester shall be checked if the process conditions or pipework configuration has been changed.

12.2.5.4.10 All parts of the flame arrester shall be constructed to resist the expected mechanical, thermal, and chemical loads for the intended use.

12.2.5.4.11 All joints shall be constructed and sealed in such a way that flame cannot bypass the flame arrester element and that flame is prevented from propagating to the outside of the flame arrester.

12.2.5.4.12 Coatings of components that may be exposed to flames during operation shall not be damaged in such a way that flame transmission is possible.

12.2.5.4.13 When a flame arrester element has no intrinsic stability, it shall be secured in a rigid housing that cannot be dismantled without destruction.

12.2.5.4.14 Inspection. Arrester systems shall be designed to allow inspection for product buildup on a frequency established by facility experience.

12.2.5.4.14.1 Initially, until experience has determined otherwise, the unit shall be inspected based on manufacturer's recommendations.

12.2.5.4.14.2 Design shall allow internal inspection of flame filter elements.

12.2.5.4.14.3 If exposed to corrosive media, filter elements shall be designed so that they can be removed for inspection.

12.2.5.4.15* Flame arresters shall be designed such that when mounted the forces of the deflagration or detonation will be absorbed by the support structure.

12.2.5.4.16 Arrester filter elements shall be replaced if any damage is detected or if a continuous burning flame was present on the arrester elements.

12.2.5.5 System Verification.

12.2.5.5.1 Flame arresters shall be tested in accordance with internationally recognized standards for the identified application (e.g., FM Global and USCG standards; ISO 16852, *Flame Arresters — Performance Requirements, Test Methods and Limits for Use*) and an independent third-party approval shall be issued.

12.2.5.5.2 Evidence that the manufacturing process is controlled within tolerances shall be available to ensure reproducibility.

12.2.5.5.3 Light metal alloys shall not contain more than 6 percent magnesium.

Copyright 2014 National Fire Protection Association (NFPA). Licensed, by agreement, for individual use and download on October 4, 2014 to LEADER and READER for designated user PATTARAPORN SRITRAKOOL. No other reproduction or transmission in any form permitted without written permission of NFPA. For inquires or to report unauthorized use, contact licensing@nfpa.org.

12.2.5.6 Static Dry Flame Arrester Application Limits.

12.2.5.6.1 Use of these devices shall not apply to operational temperature outside the approved temperature range; special testing and approval shall be required if the operational temperature is exceeded.

12.2.5.6.2 Use of these devices shall not apply to operational pressure outside the approved pressure range; special testing and approval shall be required if the operational pressure is exceeded.

12.2.5.6.3 Use of these devices shall be limited to gas–air mixtures with an MESG equal to or greater than that tested; special testing and approval shall be required for use with elevated oxygen concentration or other oxidants.

12.2.5.6.4 For in-line deflagration arresters, at least 10 percent of the cross-sectional area of the pipe shall be open at the identified process ignition source.

12.2.5.6.5 For in-line deflagration arresters the ratio of pipe length (between the potential ignition source and the flame arrester) and pipe diameter shall not exceed the tested ratio of length to diameter.

12.2.5.6.6 Where field installation includes elbows, tees, and instrumentation between the ignition source and the arrester, the owner shall provide isometric drawings of the intended piping layout to the vendor for review.

12.2.5.6.7 Use of these devices shall not apply outside the tested application limits.

12.2.5.6.8 The choice of stable versus unstable detonation arresters shall be made by the owner or operator in consultation with the vendor, giving consideration to piping configuration and location of probable ignition sources.

12.2.5.6.9 These devices shall not be used for self-decomposing mixtures, unless specifically tested for the application.

12.2.6* Hydraulic (Liquid Seal)–Type Deflagration Arresters. A liquid–type deflagration arrester shall be used for preventing the passage of flame by passing gas through a liquid.

12.2.6.1* Hydraulic (Liquid Seal)–Type Deflagration Arrester Designs. Hydraulic (liquid seal)–type deflagration arresters shall be either bubble screen or sparge tube type.

12.2.6.2 Hydraulic (Liquid Seal) Flame Arrester System Design Considerations. Hydraulic (liquid seal) flame arrester system design considerations shall include the following:

(1) Deflagration characteristics of the combustible material, including MESG
(2) Length, cross-sectional area, configuration, and strength of the piping on the unprotected side of the flame arrester (ignition source)
(3) Turbulence-generating features in the piping on the unprotected side such as fittings, valves, elbows, and wall roughness
(4) Location of probable ignition sources
(5) Potential for continued burning
(6) Arrester orientation
(7) Process conditions during startup, normal operation, and shutdown
(8) Tendency for foaming
(9) Particulate load of the process vapors
(10) Maximum process volumetric flow

12.2.6.3 Hydraulic (Liquid Seal) Flame Arrester Design Criteria. Hydraulic (liquid seal) flame arresters shall be designed according to the criteria in 12.2.6.3.1 through 12.2.6.3.27.

12.2.6.3.1 Hydraulic flame arresters shall be placed in the potential flame path between the source of ignition and the system to be protected.

12.2.6.3.2 The maximum allowable distance from the ignition source shall be documented in an independent third-party approval and in the maintenance and instruction manuals.

12.2.6.3.3 Hydraulic flame arresters shall be installed and maintained in accordance with the manufacturer's instructions.

12.2.6.3.4 Hydraulic flame arresters that can experience continued burning for a time longer than that for which they were tested or that are installed in a different orientation than in the approval test (e.g., an arrester that has undergone a continuous-burning test in an upright position with one end open to atmosphere but that is actually installed horizontally in a closed piping system) shall meet the criteria in 12.2.6.3.4.1 through 12.2.6.3.4.3.

12.2.6.3.4.1 A means of detecting the burning shall be provided on both sides of the arrester along with an alarm or automatic device to interrupt flow prior to failure.

12.2.6.3.4.2 The shutoff temperature selected shall be determined on a case-by- case basis by, but not limited to, the following criteria:

(1) The normal operating temperature of the vapor stream
(2) The maximum operating temperature of the vapor stream
(3) The vapor with the lowest autoignition temperature in the vapor stream

12.2.6.3.4.3 If thermocouples are used, they shall not be placed in thermowells unless specifically tested with these.

12.2.6.3.5 Suitability of a hydraulic flame arrester shall be checked if the process conditions or pipe work configuration has been changed.

12.2.6.3.6 All parts of the hydraulic flame arrester shall be constructed to resist the expected mechanical, thermal, and chemical loads for the intended use.

12.2.6.3.7 All joints shall be constructed and sealed in such a way that flame cannot bypass the seal containment and also flame is prevented from propagating to the outside of the flame arrester.

12.2.6.3.8 Coatings of components that might be exposed to flames during operation shall not be damaged in such a way that flame transmission is possible.

12.2.6.3.9 Inspection.

12.2.6.3.9.1 Arrester systems shall be designed to allow inspection for product buildup on a frequency established by facility experience.

12.2.6.3.9.2 Initially, until experience has determined otherwise, the unit shall be inspected based upon manufacturer's recommendations.

12.2.6.3.10* Flame arresters shall be designed such that when mounted, the forces of the deflagration or detonation will be absorbed by the support structure.

12.2.6.3.11 Arrester filter elements shall be replaced if any damage is detected or if a continuous burning flame was present on the arrester elements.

Copyright 2014 National Fire Protection Association (NFPA). Licensed, by agreement, for individual use and download on October 4, 2014 to LEADER and READER for designated user PATTARAPORN SRITRAKOOL. No other reproduction or transmission in any form permitted without written permission of NFPA. For inquires or to report unauthorized use, contact licensing@nfpa.org.

12.2.6.3.12 The hydraulic flame arrester seal level shall be constantly monitored and automatically refilled.

12.2.6.3.13 The temperature of the seal medium shall have a safety margin of 40°C under the vaporization point and 10°C above the freezing point and be maintained by insulation, heating, or cooling as required.

12.2.6.3.14 Hydraulic flame arresters shall be mounted to absorb the forces exerted on the mounting arrangement caused by the deflagration entering the unit.

12.2.6.3.15 Hydraulic flame arresters shall be inspected after each incident in which they have been called upon to function, to determine if the unit has been damaged by the deflagration or detonation.

12.2.6.3.16 Hydraulic flame arresters shall be installed and maintained in accordance with the manufacturer's instructions.

12.2.6.3.17 Hydraulic flame arresters shall have inner design features that prevent sloshing effects and wave resonance in the seal.

12.2.6.3.18 The immersion depth at rest and the operational immersion depth shall not be less than the manufacturer's recommended safety margin.

12.2.6.3.19 The operational immersion depth shall be maintained by automatic control of the water supply to ensure the minimum operational immersion depth.

12.2.6.3.20 Design shall allow internal inspection of the vessel.

12.2.6.3.21 For corrosive media, the bubble-creating devices (e.g., sparge tube or bubble screen) shall be designed from corrosion-resistant material and shall allow for inspection.

12.2.6.3.22 The flow stream design shall ensure that a controlled volume flow passes through the hydraulic flame arrester, so that no zones can be generated in which flame and pressure fronts can pass the hydraulic flame arrester, in order to avoid bubble cascade ignition and compression wave ignition.

12.2.6.3.23 Fouling and clogging shall be avoided in the seal zone.

12.2.6.3.24 Hydraulic flame arrester design and support structures shall support a completely filled system.

12.2.6.3.25 Seal level detection and refilling shall be performed within 30 seconds.

12.2.6.3.26 Seal filling shall be fail-safe or redundant.

12.2.6.3.27* The seal volume and inner design shall be capable of withstanding three impacts of maximum intensity without refilling of the seal liquid.

12.2.6.4 System Verification.

12.2.6.4.1 Hydraulic-type flame arresters shall be tested in accordance with internationally recognized standards for the identified in-line application (e.g., ISO 16852), and an independent third-party approval shall be issued.

12.2.6.4.2 Evidence shall be available that the manufacturing process is controlled within tolerances to ensure reproducibility.

12.2.6.5 Hydraulic (Liquid Seal)–Type Deflagration Arrester Application Limits.

12.2.6.5.1 Hydraulic (liquid seal) arresters shall not apply outside the approved temperature range unless special testing is provided.

12.2.6.5.2 Hydraulic (liquid seal) arresters shall not apply outside the approved pressure range unless special testing is provided.

12.2.6.5.3 Use of hydraulic (liquid seal) arresters shall be limited to gas–air mixtures with an MESG equal to or greater than that tested.

12.2.6.5.4 Hydraulic (liquid seal) arresters shall not be applied with elevated oxygen concentration or other oxidants unless special testing is provided.

12.2.6.5.5 The location of the hydraulic flame arresters shall not exceed the ratio of pipe length (between the potential ignition source and the flame arrester) to pipe diameter, and shall not exceed the tested ratio of length to diameter unless tested for detonation.

12.2.6.5.6 Hydraulic flame arresters shall not be installed for volume flows above the maximum tested volume flow for which they are designed.

12.2.7* Liquid Product Flame Arrester. A liquid product flame arrester uses the product liquid to form a seal to prevent flame transmission of a deflagration.

12.2.7.1* Liquid-Type Flame Arrester Design. Liquid product flame arresters shall be divided, for purposes of this subsection, into the following groups:

(1)*Liquid product flame arrester with siphon bypass for bidirectional transfer operation
(2)*Liquid product flame arrester without siphon bypass for filling operations only
(3)*Liquid product flame arrester with foot valve for emptying operations only

12.2.7.2 Liquid Product Flame Arrester System Design Considerations. Liquid product flame arrester system design considerations shall include the following:

(1) Explosion characteristics of the combustible material, including MESG
(2) Length, cross-sectional area, configuration, and strength of the piping on the unprotected side of the flame arrester (ignition source)
(3) Arrester orientation
(4) Process conditions during startup, normal operation, and shutdown
(5) Maximum process volumetric flow

12.2.7.3 Liquid Product Flame Arrester Design Criteria. Liquid product flame arresters shall be designed according to the criteria in 12.2.7.3.1 through 12.2.7.3.10.

12.2.7.3.1 Liquid product flame arresters shall be placed in the potential flame path between the source of ignition and the system to be protected.

12.2.7.3.2 Liquid product flame arresters shall be installed and maintained in accordance with the manufacturer's instructions.

12.2.7.3.3 Suitability of a liquid product flame arrester shall be checked if the process conditions or piping configuration has been changed.

12.2.7.3.4 All parts of the liquid product flame arrester shall be constructed to resist the expected mechanical, thermal, and chemical loads for the intended use.

Copyright 2014 National Fire Protection Association (NFPA). Licensed, by agreement, for individual use and download on October 4, 2014 to LEADER and READER for designated user PATTARAPORN SRITRAKOOL. No other reproduction or transmission in any form permitted without written permission of NFPA. For inquires or to report unauthorized use, contact licensing@nfpa.org.

12.2.7.3.5 All joints shall be constructed and sealed in such a way that flame cannot bypass the seal containment and also flame is prevented from propagating to the outside of the liquid product flame arrester.

12.2.7.3.6 Coatings of components that might be exposed to flames during operation shall not be damaged in such a way that flame transmission is possible.

12.2.7.3.7 Inspection.

12.2.7.3.7.1 Arrester systems shall be designed to allow inspection for product buildup on a frequency established by facility experience.

12.2.7.3.7.2 Initially, until experience has determined otherwise, the unit shall be inspected based on manufacturer's recommendations.

12.2.7.3.7.3 Design shall allow internal inspection of seal containment.

12.2.7.3.7.4 If a siphon bypass device is included, design shall allow internal inspection of the flame arrester element of the siphon bypass device.

12.2.7.3.7.5 If filter elements are included and these are exposed to corrosive media, filter elements shall be designed such that they can be removed for inspection.

12.2.7.3.8 The temperature of the seal medium shall have a safety margin 40°C below the vaporization point and 10°C above the freezing point and be maintained by insulation, heating, or cooling, as required.

12.2.7.3.9 Liquid product flame arresters shall be mounted to absorb the forces exerted on the mounting arrangement.

12.2.7.3.10 Liquid product flame arresters shall be inspected after each incident in which they have been called on to function, to determine if the unit has been damaged by the deflagration.

12.2.7.4 System Verification.

12.2.7.4.1 Liquid product flame arresters shall be tested in accordance with internationally recognized standards for the identified in-line application and an independent third-party approval shall be issued.

12.2.7.4.2 Evidence shall be available that the manufacturing process is controlled within tolerances to ensure reproducibility.

12.2.7.5 Liquid Product Flame Arrester Application Limits.

12.2.7.5.1 These devices shall not be applied outside the approved temperature range unless special testing is provided.

12.2.7.5.2 These devices shall not be applied outside the approved pressure range unless special testing is provided.

12.2.7.5.3 Use of these devices shall be limited to gas–air mixtures with an MESG (vapor will result from liquid evaporation) equal to or greater than that tested.

12.2.7.5.4 These devices shall not be applied with elevated oxygen concentration or other oxidants unless special testing is provided.

12.2.7.5.5 These devices shall not be applied to self-decomposing mixtures, unless specifically tested.

12.2.7.5.6 These devices shall not be installed for volumetric flows above the maximum tested flow for which they are designed.

Chapter 13 Deflagration Control by Pressure Containment

13.1 Application.

13.1.1 The technique for deflagration pressure containment shall be permitted to be considered for specifying the design pressure of a vessel and its appurtenances so they are capable of withstanding the maximum pressures resulting from an internal deflagration.

13.1.2 This chapter shall provide the basis for determining the vessel design pressure required to withstand the pressures resulting from an internal deflagration.

13.1.3 This chapter shall be limited to systems in which the oxidant is air.

13.1.4 The design pressure specified by this chapter shall be based on the most severe set of system conditions that can occur.

13.1.5* Deflagration pressure containment shall be applied to a vessel with attached equipment to protect such equipment from imposed pressure loads that could equal or be greater than the pressure loads experienced by the protected vessel.

13.2 Design Limitations.

13.2.1* Deflagration pressure containment techniques shall not be applied to systems for the purpose of containing a detonation.

13.2.2* Deflagration pressure containment shall not be applied to systems where two or more vessels are connected by large-diameter pipes or ducts, unless one of the following conditions is met:

(1) Deflagration pressure containment shall be permitted to be used where interconnected piping is provided with deflagration isolation.
(2) Deflagration pressure containment shall be permitted to be used where venting is provided for interconnected piping.
(3) Deflagration pressure containment shall be permitted to be used where interconnected vessels are designed to contain the increased pressures due to the effects of prepressurization. *(See Annex G.)*
(4) Deflagration isolation or venting of one vessel shall be permitted to be used.
(5)*Deflagration pressure containment shall be permitted to be used for initial gauge pressures exceeding 2 bar (30 psi) only when the maximum deflagration pressure ratio (R) is determined by test or calculations.

13.3 Design Bases.

13.3.1 Enclosures protected by design for deflagration pressure containment shall be designed and constructed according to the ASME *Boiler and Pressure Vessel Code*, or similar codes, where the maximum allowable working pressure, herein designated as P_{mawp}, shall be determined by calculation.

13.3.1.1 Such determinations shall include an allowable stress for the enclosure material of construction, which is less than the measured yield stress and the measured ultimate stress for the material of construction.

13.3.1.2 The design pressure shall be based on the wall thickness of the enclosure, subtracting any allowance for corrosion or erosion. For existing enclosures, the design pressure shall be based on the actual measured minimum wall thickness, subtracting a corrosion allowance.

Copyright 2014 National Fire Protection Association (NFPA). Licensed, by agreement, for individual use and download on October 4, 2014 to LEADER and READER for designated user PATTARAPORN SRITRAKOOL. No other reproduction or transmission in any form permitted without written permission of NFPA. For inquires or to report unauthorized use, contact licensing@nfpa.org.

13.3.1.3 The enclosure design shall take into consideration the minimum operating temperature at which a deflagration could occur, which shall be compared with the temperature characteristics of the vessel's construction material to ensure that brittle fracture cannot result from a deflagration.

13.3.1.4 The user shall determine whether permanent deformation of the protected enclosure, as a result of a potential deflagration, can be accepted.

13.3.2 The design pressure of the enclosure, as calculated in 13.3.4, shall be based either on preventing rupture of the enclosure (the ultimate strength of the enclosure), but allowing permanent deformation (also called explosion-proof shock-resistant), or on preventing permanent deformation (the yield strength of the enclosure, also called explosion-pressure shock-resistant) from internal positive overpressure.

13.3.3 Due to the vacuum that could follow a deflagration, all enclosures whose deflagration pressure containment design is based on preventing deformation shall also be designed to withstand an absolute internal pressure of 68.95 kPa (10 psi) or they shall be provided with vacuum relief.

13.3.4* Given an initial pressure and dimensionless pressure ratio for the potential deflagration, P_{mawp} shall be selected based on the following conditions as defined by Equation 13.3.4a or Equation 13.3.4b:

(1) Permanent deformation, but not rupture, of the enclosure can be accepted.

$$P_{mawp} \geq \frac{\left[R(P_i + 14.7) - 14.7\right]}{\left[\left(\frac{2}{3}\right)F_u\right]} \qquad \textbf{(13.3.4a)}$$

(2) Permanent deformation of the enclosure cannot be accepted.

$$P_{mawp} \geq \frac{\left[R(P_i + 14.7) - 14.7\right]}{\left[\left(\frac{2}{3}\right)F_y\right]} \qquad \textbf{(13.3.4b)}$$

where:

P_{mawp} = enclosure design pressure (psig) according to ASME *Boiler and Pressure Vessel Code*
R = dimensionless pressure ratio
P_i = maximum initial pressure at which combustible atmosphere exists (psig)
F_u = ratio of ultimate stress of the enclosure to the allowable stress of the enclosure according to ASME *Boiler and Pressure Vessel Code*
F_y = ratio of the yield stress of the enclosure to the allowable stress of the materials of construction of the enclosure according to ASME *Boiler and Pressure Vessel Code*

13.3.4.1* The dimensionless ratio, R, is the ratio of the maximum deflagration pressure, in absolute pressure units, to the maximum initial pressure, in consistent absolute pressure units.

13.3.4.2 For use as a practical design basis (since optimum conditions seldom exist in industrial equipment), the value of R shall be as follows:

(1) For most gas and air mixtures, the value of R shall be 9.
(2) For St-1 and St-2 dust–air mixtures, the value of R shall be 11.
(3) For St-3 dust–air mixtures, the value of R shall be 13.

13.3.4.3 A value for R other than the values specified in 13.3.4.2 shall be permitted to be used if such value can be substantiated by test data or calculations.

13.3.4.4 For operating temperatures below 25°C (77°F), the value of $\dot{R}$ shall be calculated for use in Equation 13.3.4a and Equation 13.3.4b:

$$\dot{R} = R\left(\frac{298}{273 + T_i}\right) \qquad \textbf{(13.3.4.4)}$$

where:

$\dot{R}$ = deflagration ratio adjusted for operating temperature
R = maximum deflagration ratio for the mixture measured at 25°C (77°F)
T_i = operating temperature (°C)

13.3.5 The presence of any pressure relief device on the system shall not cause the design pressure calculated by the methods of 13.3.4 to be reduced.

13.3.6* The maximum initial pressure for positive pressure systems shall be as follows:

(1) For positive pressure systems that handle gases and liquids, the maximum initial pressure, P_i, shall be the maximum initial pressure at which a combustible atmosphere is able to exist, but a pressure not higher than the setting of the pressure relief device plus its accumulation.
(2) For positive pressure systems that handle dusts, the maximum initial pressure shall be the greater of the following two pressure values:
   (a) Maximum possible discharge pressure of the compressor or blower that is suspending or transporting the material
   (b) Setting of the pressure relief device on the vessel being protected plus its accumulation
(3) For gravity discharge of dusts, the maximum initial pressure shall be the atmospheric gauge pressure (0.0 bar or 0.0 psi).

13.3.7 For systems operating under vacuum, the maximum initial pressure shall not be less than atmospheric gauge pressure (0.0 bar or 0.0 psi).

13.3.8 Auxiliary equipment such as vent systems, manways, fittings, and other openings into the enclosure, which could also experience deflagration pressures, shall be designed to ensure integrity of the total system and shall be inspected periodically.

13.4 Maintenance. Any enclosure designed according to the methods of this chapter shall be inspected and maintained in accordance with local jurisdictional practices for registered pressure vessels. In particular, relief devices shall be inspected periodically to ensure that they are not plugged, frozen, or corroded.

13.4.1 If not required by local jurisdiction, inspection and maintenance shall be in accordance with API 510, *Pressure Vessel Inspection Code: Maintenance Inspection, Rating, Repair, and Alteration.*

13.4.2 Enclosures shall be inspected at least every 3 years.

13.4.3 Repairs and modifications to the enclosure shall be made consistent with the original design code.

Copyright 2014 National Fire Protection Association (NFPA). Licensed, by agreement, for individual use and download on October 4, 2014 to LEADER and READER for designated user PATTARAPORN SRITRAKOOL. No other reproduction or transmission in any form permitted without written permission of NFPA. For inquires or to report unauthorized use, contact licensing@nfpa.org.

13.5 Threaded Fasteners. Threaded fasteners on enclosure appurtenances shall be inspected to ensure that design pressure ratings are maintained.

13.6 Inspection After a Deflagration. Any enclosure designed to contain a deflagration that experiences a deflagration shall be inspected to verify that the vessel is still serviceable for its intended use.

Chapter 14 Passive Explosion Suppression Using Expanded Metal Mesh or Polymer Foams

14.1* Applications.

14.1.1 The use of expanded metal mesh or reticulated polymer foams manufactured, tested, and installed in accordance with the requirements of this chapter shall be permitted for explosion suppression in unoccupied enclosures containing flammable gas or vapor.

14.1.2 These enclosures shall include, but not be limited to, fuel tanks, flammable liquid storage tanks, portable containers, and flammable liquid cargo tanks.

14.2 Foam and Mesh Requirements.

14.2.1 Expanded metal mesh shall meet the requirements in 14.2.4.

14.2.2 Polymer foams shall meet the requirements in 14.2.5.

14.2.3 Both types of suppression materials described in this chapter shall satisfy the explosion suppression test requirements in Section 14.3.

14.2.4 Expanded Metal Mesh Requirements.

14.2.4.1* Expanded aluminum or other metal mesh shall have a density of 24 to 51 kg/m^3 (1.5 to 3.2 lb/ft^3) as determined by the average of three samples from the same manufacturing run as the samples used for the other tests in Sections 14.2 and 14.3.

14.2.4.2 The expanded metal mesh shall have sufficient surface area to absorb the heat generated in an incipient deflagration of a flammable gas–air mixture as demonstrated by the tests described in Section 14.3.

14.2.4.2.1 The expanded metal mesh surface area per unit volume shall be measured or calculated for three samples.

14.2.4.2.2 The measurements and associated calculations shall be documented and made available to the authority having jurisdiction.

14.2.4.2.3* Expanded metal mesh intended for the protection of alkane–air mixtures and other flammable vapors with fundamental burning velocities within 15 percent of the fundamental burning velocity of a near-stoichiometric propane–air mixture shall have a surface area-to-volume ratio of at least 0.25 mm^{-1} (0.1 in.$^{-1}$).

14.2.4.2.4 Expanded metal mesh intended for the protection of flammable gases or vapors with faster burning velocities shall have a minimum area-to-volume ratio determined from explosion suppression tests described in Section 14.3 with that particular flammable gas or vapor.

14.2.4.3* Pore Size.

14.2.4.3.1 Expanded metal mesh shall have a pore (cell) size that is smaller than the quenching distance for the flammable gas or vapor expected in the protected enclosure.

14.2.4.3.2 In the case of alkanes or flammable gases and vapors with fundamental burning velocities within 15 percent of the near-stoichiometric propane–air burning velocity, the maximum pore size shall be 2 mm (0.079 in.).

14.2.4.4* The metal alloy composition and the composition and thickness of any coating shall be reported in accordance with the most applicable ASTM, military, or industry standard.

14.2.5* Polymer Foam Requirements. Polyurethane or other polymer foam shall have a density of 19 to 32 kg/m^3 (1.2 to 2.0 lb/ft^3) as determined by the density test described in ASTM D 3574, *Standard Test Methods for Flexible Cellular Materials Slab, Bonded, and Molded Urethane Foams*.

14.2.5.1* The polymer foam number of pores per inch, as determined from the air flow test shown in Figure 1 in MIL-DTL-83054C and in MIL-PRF-87260A, and the corresponding air flow versus pore size correlation in Figure 2 and paragraph 4.6.4 of MIL-DTL-83054C or Figure 2 of MIL-PRF-87260A for conductive polymer foam, shall be a minimum of 6 pores/cm (15 pores/in.) for foams with a density of 19 to 24 kg/m^3 (1.2 to 1.5 lb/ft^3), and at least 4 pores/cm (10 pores/in.) for foams with a density of 26 to 32 kg/m^3 (1.6 to 2.0 lb/ft^3).

14.2.5.2 For applications with liquids or gases with fundamental burning velocities greater than 0.5 m/sec (1.6 ft/sec) the minimum number of pores per inch shall be determined by test as described in 14.3.2.

14.2.5.3 The polymer foam shall have a maximum of 30 percent deflection when tested in accordance with the constant deflection compression test described in paragraph 4.6.7 of MIL-DTL-83054C and method B of ASTM D 3574.

14.2.5.4 Tensile Strength Specifications.

14.2.5.4.1 The polymer foam shall have a minimum tensile strength of 103 kPa (15 psi) when tested in accordance with ASTM D 3574 and paragraph 4.6.5 of MIL-DTL-83054C.

14.2.5.4.2 In addition, the foam shall not experience a loss of tensile strength greater than 50 percent when tested at the maximum expected application temperature.

14.2.5.5 Electrical Resistivity.

14.2.5.5.1 The polymer electrical resistivity shall be measured at 24°C (75°F) or other temperature representative of the protected process using the procedure described in ASTM D 257, *Standard Test Methods for DC Resistance or Conductance of Insulating Materials*, and in Section 4.56.23 of MIL-PRF-87260A (USAF), *Foam Material, Explosion Suppression, Inherently Electrically Conductive, for Aircraft Fuel Tank and Dry Bay Areas*.

14.2.5.5.2* The polymer resistivity shall be less than 1×10^{11} ohm-cm at 24°C (75°F) or other temperature representative of the protected process and at 55 percent ±5 percent relative humidity.

14.2.5.6 The polymer ignitibility and fire heat release rate shall be measured using an oxygen consumption calorimeter per NFPA 271, *Standard Method of Test for Heat and Visible Smoke Release Rates for Materials and Products Using an Oxygen Consumption Calorimeter*, at an imposed radiant heat flux of 75 kW/m^2.

14.2.5.6.1 The polymer time-to-piloted-ignition at this heat flux shall be longer than 5 seconds.

14.2.5.6.2 The heat release rate per unit area shall be documented and made available to the authority having jurisdiction upon request.

Copyright 2014 National Fire Protection Association (NFPA). Licensed, by agreement, for individual use and download on October 4, 2014 to LEADER and READER for designated user PATTARAPORN SRITRAKOOL. No other reproduction or transmission in any form permitted without written permission of NFPA. For inquires or to report unauthorized use, contact licensing@nfpa.org.

14.2.5.7 The polymer foam shall demonstrate the resistance as shown in 14.2.5.7.1 and 14.2.5.7.2 to deterioration after being submerged in the container liquid for a period of 4 weeks.

14.2.5.7.1 After drying the foam, the tensile strength test referenced in 14.2.5.4.1 shall be repeated with no more than a 40 percent reduction in measured strength.

14.2.5.7.2 The electrical resistivity test shall also be repeated, and the measured resistivity shall be less than 1×10^{11} ohm-cm at 24°C (75°F) or other temperature representative of the protected process and at 55 percent ±5 percent relative humidity.

14.2.6 The foam shall be sufficiently flexible to be inserted into and fill up the protected enclosure, using blocks of foam no smaller than 1 ft (0.3 m) in length or the smallest dimension of the enclosure, whichever is smallest.

14.2.7 The minimum foam block width and height shall be determined from the double void explosion suppression tests described in 14.3.6 and 14.3.7 and the installation requirements in Section 14.4.

14.2.8 Foam packages and shipping documents shall contain the foam make and type, the foam density, the area-to-volume ratio, and the pore size.

14.3 Expanded Metal Mesh and Polymer Foam Explosion Suppression Testing.

14.3.1 Expanded metal mesh and polymer foams shall be subjected to explosion suppression performance testing as described in 14.3.2 through 14.3.5.2.

14.3.2 Test results shall be as specified in 14.3.6 and 14.3.7.

14.3.3* Explosion suppression tests shall be conducted with dry mesh or foam firmly inserted in closed test vessels of at least 140 L (5 ft^3) volume, and with a cross-sectional area of at least 64,500 mm^2 (100 $in.^2$).

14.3.3.1 The first test shall be conducted with the vessel 80 percent filled with mesh or foam of documented area-to-volume ratio or pore size and percent liquid displacement, and the remaining 20 percent of the volume empty except for the gas–air mixture described in 14.3.4.

14.3.3.2 The second test shall be conducted with the vessel 90 percent filled with mesh or foam, with a 10 percent void volume.

14.3.4 The tests shall be conducted with a flammable gas–air mixture with a fundamental burning velocity representative of the burning velocities of flammable vapors expected in the intended applications.

14.3.4.1 Propane at a concentration in the range 4.4 to 4.8 volume percent shall be used for applications in which the flammable gas has a fundamental burning velocity in the range 350 to 500 mm/sec (1.15 to 1.64 ft/sec).

14.3.4.2 Suppression tests for applications involving other flammable gases or vapors shall be conducted with a representative gas–air mixture at a concentration in the range 1.1 to 1.2 times the stoichiometric concentration.

14.3.4.3 After the gas mixture has been established uniformly throughout the test vessel, the gas concentration shall be verified by a calibrated gas analyzer or by sampling and subsequent chemical analysis.

14.3.4.4 The pressure in the test vessel prior to ignition shall be representative of the normal operating pressure of the intended application.

14.3.5 The flammable gas–air mixture shall be ignited with an ignition source of at least 10 joule energy triggered in the void volume, and the resulting reduced explosion pressure, P_{red}, shall be measured and reported.

14.3.5.1 After conducting the second test (with the 10 percent void volume), all the mesh or foam shall be removed and the explosion test repeated with the same gas mixture in the gas-filled closed vessel, or in another test vessel of similar volume.

14.3.5.2 The value of P_{max} measured without the mesh or foam shall be measured and reported.

14.3.6 Single Void Explosion Suppression Tests.

14.3.6.1 A particular composition and porosity of expanded metal mesh or polymer foam shall be permitted for explosion suppression applications if the value of P_{red} measured in the 10 percent void volume test at initially atmospheric pressure is no greater than 34 kPa (5 psi), and if the pressure measured in the test with the 20 percent void volume is no greater than 83 kPa (12 psi).

14.3.6.2 If the tests and intended application has a pre-ignition pressure, P_0, of some other value, the maximum allowable values of P_{red} shall be determined from the values of $(P_{red} - P_0)/(P_{max} - P_0)$ per Table 14.3.6.2.

Table 14.3.6.2 Allowable Results of Single Void Explosion Suppression Tests

Void Volume Fraction	Maximum Value of $(P_{red} - P_0)/(P_{max} - P_0)$
0.10	0.043
0.20	0.10

14.3.7* Double Void Explosion Suppression Tests.

14.3.7.1 Double void explosion suppression tests shall be conducted with the same vessel, gas mixture, and ignition source as described in 14.3.3 through 14.3.6, but now with two voids separated by varying thicknesses of dry expanded metal mesh or polymer foam.

14.3.7.2 Starting with 5 cm (2 in.), the thickness of mesh or foam shall be increased in 2.5 cm (1 in.) increments until the tests demonstrate that the flame does not propagate across the mesh or foam from the ignition void to the second void, as determined from measured temperature increase or visual records, as well as pressure rise.

14.3.8 The minimum thickness of mesh or foam required to achieve suppression in the double void tests shall be no greater than 127 mm (5 in.).

14.4 Expanded Metal Mesh or Polymer Foam Installations.

14.4.1* Explosion suppression mesh or foams shall be installed only in enclosures with ultimate strengths or yield strengths, as determined by the owner or operator, equal to at least 1.5 times the value of P_{red} determined from the 20 percent single void volume explosion suppression tests described in 14.3.3 through 14.3.6.

Copyright 2014 National Fire Protection Association (NFPA). Licensed, by agreement, for individual use and download on October 4, 2014 to LEADER and READER for designated user PATTARAPORN SRITRAKOOL. No other reproduction or transmission in any form permitted without written permission of NFPA. For inquires or to report unauthorized use, contact licensing@nfpa.org.

14.4.2* The mesh or foam shall fill at least 90 percent of the entire enclosure volume as verified by visual inspection during and following the installation.

14.4.2.1 The minimum thickness of any one block of mesh or foam used in the installation shall be the value determined in the double void volume tests described in 14.3.7.

14.4.2.2 Documentation of the installed fill fraction and minimum thicknesses of mesh or foam, as well as the explosion suppression test results, shall be made available to the authority having jurisdiction upon request.

14.5 Expanded Metal Mesh or Polymer Foam Maintenance and Replacement.

14.5.1 Inspection.

14.5.1.1 Mesh or foam installations shall be initially inspected for any evidence of deterioration at intervals of no greater than 6 months. Further guidance on inspection shall be in accordance with Chapter 15.

14.5.1.2 When there is visual evidence of deterioration, the mesh or foam shall be replaced, in accordance with the installation requirements in Section 14.4.

14.5.1.3 Mesh or foam installations shall be inspected following any explosion or fire exposure.

14.5.2 Disposal of used, liquid-contaminated mesh or foam shall be in accordance with local environmental regulations.

Chapter 15 Installation, Inspection, and Maintenance of Explosion Prevention Systems

15.1 General.

15.1.1 This chapter covers the installation, inspection, and maintenance procedures necessary for proper function and operation of explosion prevention and control systems.

15.1.2 Sections 15.7 through 15.11 shall be applied retroactively.

15.1.3 Design considerations shall follow the requirements listed in the applicable chapter of NFPA 69.

15.2 Installation.

15.2.1 Design and Submittal Documentation.

15.2.1.1 A design record file including data sheets, installation details, and design calculations shall be assembled following the requirements of this document's technique chapters and maintained for each application, suitable for use in validating the system design including, as applicable, the following criteria:

(1) Manufacturer's data sheets and instruction manuals
(2) Design calculations including final reduced (P_{red}) pressures
(3) General specifications
(4) Explosion prevention system equipment list
(5) Sequence of operation for each system
(6) End user inspection and maintenance forms
(7) User documentation of conformity with applicable standards and the appropriate chapter of this standard
(8) Combustible material properties and source of data
(9) Process hazard review
(10) Process plan view including protected process, placement location of all explosion prevention devices, and personnel work locations
(11) Process elevation view
(12) Electrical wiring diagram, including process interlock connection details
(13) Mechanical installation drawings and details
(14) Electrical installation drawings and details
(15) Process interlocks identifying each equipment interlock and function (P&ID)
(16) Employee training requirements

15.2.1.2 All design and installation parameters shall be field verified prior to installation of explosion prevention systems.

15.2.2 As-built drawings, system user instruction manuals, and service maintenance requirements shall be presented to the owner or operator at project completion.

15.3 Mechanical Installation.

15.3.1 Mounting locations shall follow the manufacturer's requirements, since explosion prevention systems are location-sensitive.

15.3.1.1 Location changes shall be made only with the approval of the explosion prevention system manufacturer.

15.3.1.2 Mounting locations shall be chosen so as not to exceed maximum operating temperatures of system components.

15.3.1.3 Mounting locations shall include safe access for installation, service, inspection, and maintenance, up to and including work platforms as required by local workplace safety regulations.

15.3.2 Detectors shall be mounted according to manufacturer instructions to protect them from shock, vibration, accumulation of foreign material, and clogging or obscuration of the sensing area.

15.3.3 Discharge nozzles shall be located and oriented so that they will not be obstructed by structural elements in the discharge pattern or by solid particle accumulation.

15.3.4 Mechanical installation and system components shall be made from material that will be protected from corrosion and other contaminants.

15.3.5 Detectors shall be mounted such that a means for inspecting and removing obstructions to the sensing pathway is provided.

15.3.6 Detector mounting shall incorporate means to minimize unwanted system actuation due to vibration or shock, where applicable.

15.4 Agent, Agent Storage Containers, Automatic Fast-Acting Valves, Flame Arresters, and Flame Front Diverters.

15.4.1* The adapting mounting hardware and the mounting surfaces for all protection system components shall be able to withstand the static and dynamic load, including the thrust or impulse pressure requirements of the original equipment manufacturer and temperature requirements of the application.

15.4.2 Agent storage containers installed externally to the protected process shall be mounted such that a means for inspecting the agent discharge pathway for obstructions is provided.

15.4.3 Agent storage containers shall be mounted so that the process or environmental temperature attained at the location of electrically fired actuators shall not exceed the maximum temperature for which they are rated.

Copyright 2014 National Fire Protection Association (NFPA). Licensed, by agreement, for individual use and download on October 4, 2014 to LEADER and READER for designated user PATTARAPORN SRITRAKOOL. No other reproduction or transmission in any form permitted without written permission of NFPA. For inquires or to report unauthorized use, contact licensing@nfpa.org.

15.5 Electrical Installation.

15.5.1 All electrical equipment and installations shall comply with the requirements of *NFPA 70, National Electrical Code*.

15.5.2 Terminals and connections shall be protected from moisture and other contaminants.

15.5.3 Hazardous (classified) areas that are identified in accordance with 15.5.1 shall be documented, and such documentation shall be permanently maintained on file for the life of the facility.

15.5.4 Wiring for input and output control circuits shall be isolated and shielded and protected from other wiring to prevent possible induced currents.

15.5.5 Instrumentation included as part of an explosion prevention or protection system shall meet the requirements of 15.5.5.1 through 15.5.5.4.

15.5.5.1* Control systems shall be installed, maintained, and isolated from the basic process control system.

15.5.5.1.1 Minimum functional testing requirements shall be in accordance with this chapter.

15.5.5.1.2 When supported by a documented hazard analysis, the functional testing requirements shall be permitted to be reduced for routine inspections.

15.5.5.2* Class A or Class B circuits as described in *NFPA 72, National Fire Alarm Code*, shall be employed when the following components are connected to the control panel:

(1) Concentration measurement devices, explosion detection devices, and other initiating devices
(2) Concentration controlling valves
(3) Releasing devices, solenoids, or actuators
(4) Supervisory devices that monitor critical elements or functions such as low pressure switches
(5) Notification appliances
(6) Signaling line circuits

15.5.5.3 A signaling line circuit used as part of an explosion protection or suppression system shall not be shared by other operating systems.

15.5.5.4 A signaling line circuit shall not be used by more than one explosion prevention system unless certified by the original manufacturer.

15.5.6 Wiring.

15.5.6.1 Wiring for explosion prevention systems shall be isolated from other facility wiring.

15.5.6.2 Wiring for multiple explosion prevention systems shall be isolated from each other, unless shielded or shielded and operating as an intrinsically safe circuit.

15.5.7 Sealed fittings shall be installed at all sensor and suppressor/valve actuator connection boxes to provide protection from moisture and contaminants.

15.5.8 Connections and boxes shall meet the National Electrical Manufacturer's Association (NEMA) rating appropriate to the operating environment.

15.5.9 A reliable source of electrical energy shall be used that meets the requirements of the manufacturer.

15.6 System Acceptance.

15.6.1 Prior to use, factory authorized personnel shall check out the explosion prevention system, including the following steps, as applicable:

(1) Conduct a walkthrough and general visual inspection of location, size, type, and mounting of all system components.
(2) Physically inspect system components, including mechanical and electrical component integrity.
(3) Conduct control unit functional testing.
(4) Make point-to-point wiring checks of all circuits.
(5) Verify the continuity and condition of all field wiring.
(6) Inspect sensing pathway and calibrate initiating devices.
(7) Verify that installation of system components, including sensing devices, fast-acting valves, suppressant storage containers, nozzles, spreader hoses, protective blowoff caps, plugs, and stoppers, is in accordance with the manufacturer's specifications.
(8) Verify system sequence of operations by simulated activation to verify system inputs and outputs.
(9) Conduct automatic fast-acting valve stroke test.
(10) Conduct prevalidation testing, verify system interlocks, and shutdown circuits.
(11) Identify and fix discrepancies before arming and handing off to user or operator.
(12) Recalibrate detection sensing devices to final set points.
(13) Complete record of system acceptance, including hardware serial numbers, detector pressure calibrations, and suppressor and valve actuator charging pressures, as appropriate.
(14) Conduct end user training as required in Section 15.10.
(15) Conduct final validation testing for authority having jurisdiction.
(16) Arm the explosion prevention system.

15.7 Inspection.

15.7.1 Systems shall be inspected and tested at 3-month intervals.

15.7.1.1 Systems designed by the owner or operator shall be inspected by personnel authorized by the owner or operator.

15.7.1.2 Systems designed by the manufacturer shall be inspected by personnel trained and authorized by the system manufacturer.

15.7.1.3* The frequency of inspection described in 15.7.1 shall be permitted to be increased or decreased based on documented operating experience or a documented hazard analysis, and only with approval of both the explosion prevention system designer and the AHJ.

15.7.1.4 Maximum inspection and test interval shall not exceed 2 years.

15.7.2 Disarming and OSHA lockout/tagout procedures (29 CFR 1910.147) and confined space entry procedures (29 CFR 1910.146), or local country equivalent, shall be followed prior to entering or performing maintenance operations on the protected equipment or performing maintenance on the explosion prevention system.

15.7.2.1* Inspection and maintenance procedures shall comply with the manufacturer's instructions.

15.7.2.2 Operation of the protected equipment shall be interlocked through the explosion prevention systems control panel

Copyright 2014 National Fire Protection Association (NFPA). Licensed, by agreement, for individual use and download on October 4, 2014 to LEADER and READER for designated user PATTARAPORN SRITRAKOOL. No other reproduction or transmission in any form permitted without written permission of NFPA. For inquires or to report unauthorized use, contact licensing@nfpa.org.

so that operation cannot be resumed until OSHA lockout/tagout procedures are reversed and the explosion prevention system is rearmed.

15.7.3* An inspection of explosion prevention systems shall be conducted in accordance with the system designer's requirements and project specifications and shall include the following conditions, where applicable:

(1) The process and processed material have not changed since the last inspection.
(2) The explosion prevention system has been installed in accordance with this standard and the manufacturer's instructions.
(3) System components, including mounting arrangements, are not corroded or mechanically damaged.
(4) User operation instructions are provided near the control unit.
(5) System components are clearly identified as an explosion prevention device.
(6) System components have no damage from the process, acts of nature, or debris.
(7) System components have not been painted or coated without prior approval from the original equipment manufacturer.
(8) System components are not blocked by process material.
(9) System components have not been tampered with.
(10) The system has not discharged or released.
(11) System seals, tamper indicators, or discharge indicators, if provided, are in place and functioning.
(12) The control unit functions according to design requirements, circuits are supervising the system, and status is "normal condition" when armed.
(13) The system wiring is free from ground conditions and faults.
(14) System suppressors and valve actuators are pressurized and operational.
(15) System interlocks are verified for sequence and functioning in accordance with the relevant specifications.
(16) Mechanical isolation (such as rotary valves), if used, is maintained within the requirements of this standard and design tolerances.
(17) Plant fire notification is verified.
(18) System sequence of operation is verified by simulated activation.
(19) System component serial numbers are verified as the same as those recorded during the last inspection.

15.7.4 A container having a pressure (corrected for temperature) that is less than the minimum value specified by the manufacturer shall be reconditioned or replaced.

15.7.5 Suppressant agent pressurized cylinders shall be verified to be compliant with DOT and/or ASME requirements.

15.7.6 The owner or operator shall verify by signature on the inspection form that the production process material has not changed from that identified in the design record file.

15.7.7 The explosion prevention system design record file shall be maintained and made available for management of change review, employee training information, and inspection purposes.

15.7.8 Deficiencies found during inspections shall be reported to the owner or operator along with recommended remedial actions.

15.8 Procedures Following System Actuation.

15.8.1* In the event of explosion prevention system actuation, inspection and testing, as specified in Section 15.7, shall be performed before the system is placed back into service.

15.8.2* An investigation and review of the cause of the explosion prevention system actuation shall be made.

15.9 Recordkeeping.

15.9.1 A record shall be maintained that indicates the date and the results of each inspection and the date and description of each maintenance activity.

15.9.2 System inspection reports shall be kept or accessible at the site for at least 3 years. The report shall include test and calibration data on all system components.

15.9.3 The records of inspections shall be retained by the owner or operator for the life of the protected process.

15.9.4 A copy of the records of inspection shall be made available to the explosion prevention system manufacturer, if requested.

15.10 Personnel Safety and Training

15.10.1 Operating and maintenance procedures and emergency plans shall be developed. The plans and procedures shall be revalidated annually and as required by management of change procedures.

15.10.2 Initial and, at a minimum, annual refresher training shall be provided to personnel who operate, maintain, supervise, or are exposed to equipment and processes protected by explosion prevention systems. Training shall include the following issues:

(1) Hazards of the workplace
(2) General orientation, including plant safety rules
(3) Process description
(4) Equipment operation, safe startup, shutdown, and response to upset conditions
(5) The necessity for fire and explosion protection systems
(6) Maintenance requirements and practices
(7) Explosion prevention system arming and disarming procedures
(8) Process lockout/tagout procedures
(9) Housekeeping requirements
(10) Emergency response and egress plans
(11) Management of change procedures
(12) System impairment reporting procedures

15.10.3 Disarming and lockout/tagout procedures shall be followed prior to entering equipment protected by explosion prevention systems.

15.10.3.1 The explosion prevention system shall be disarmed and the process shall be shut down prior to performing maintenance operations on the protected equipment or the explosion prevention system.

15.10.3.2 Operation of the protected equipment shall be interlocked through the explosion prevention system controls so that operation cannot be resumed until the prevention system is armed.

15.11 Management of Change.

15.11.1 Management shall implement and maintain written procedures to evaluate proposed changes to facility and processes, both physical and human, for the impact on safety, explosion prevention, and control.

Copyright 2014 National Fire Protection Association (NFPA). Licensed, by agreement, for individual use and download on October 4, 2014 to LEADER and READER for designated user PATTARAPORN SRITRAKOOL. No other reproduction or transmission in any form permitted without written permission of NFPA. For inquires or to report unauthorized use, contact licensing@nfpa.org.

15.11.2 Management of change procedures shall be followed for any change to process, materials, technology, equipment, process flow, exposure, or procedures affecting equipment protected by requirements in this document.

15.11.3* Management of change documentation shall be available for review by the relevant authority having jurisdiction and the manufacturer or designer of explosion prevention equipment.

15.11.4 The management of change procedures shall ensure that the following issues have been addressed prior to any change:

(1) The technical basis for the proposed change
(2) Process material changes
(3) Safety and health implications
(4) Fire and explosion prevention systems review
(5) Whether the change is permanent or temporary
(6) Personnel exposure changes
(7) Modifications to operating maintenance procedures
(8) Employee training requirements
(9) Authorization requirements for the proposed change

15.11.5 Explosion prevention system documentation as required by Chapter 15 shall be updated to incorporate the change.

15.11.6 Implementation of the management of change procedures shall not be required for replacements-in-kind or refurbishment of explosion prevention systems.

15.11.7 An annual statement declaring no change shall be created and maintained for the life of the process.

15.12 Maintenance.

15.12.1 Maintenance shall be performed after any condition that could impair the protection system, in accordance with the manufacturer's requirements.

15.12.2 A visual inspection shall be performed in accordance with Section 15.7 after every process maintenance turnaround.

15.12.3 If process material has a tendency to adhere to the system components, the affected components shall be cleaned periodically to maintain system efficiency.

15.12.4 Process interlocks shall be verified.

15.12.5 Inspection for potential ignition sources shall be conducted and, where practical, eliminated or maintained within permissible limits.

15.12.6 Records shall be kept for a minimum of 10 years of any maintenance and repairs performed.

Annex A Explanatory Material

Annex A is not a part of the requirements of this NFPA document but is included for informational purposes only. This annex contains explanatory material, numbered to correspond with the applicable text paragraphs.

A.1.2.3 Some jurisdictions, industries, and companies require system reliability to meet a target measure of failure on demand for hardware. These targets can be stated as a level of safety integrity. Establishing safety integrity levels is covered by ISA and other organizations. The requirements of this standard and the review and approval processes stated are intended to establish an acceptable level of reliability. Nothing in this standard is intended to prevent the use of safety integrity levels used by other organizations. *(See also A.15.5.5.1.)*

A.1.3.1.3 Where ignition is deemed a significant risk in either interconnected enclosure, each such enclosure should also be protected using a method for explosion prevention. For such a case, deflagration isolation is usually needed between the interconnected vessels in addition to a method for explosion prevention on each interconnected vessel. The use of explosion venting alone for the interconnected enclosures, without deflagration isolation, is limited due to the potential for increased explosion severity, as explained in NFPA 68, *Standard on Explosion Protection by Deflagration Venting*. The use of containment or foam alone for the interconnected enclosures, without deflagration isolation, is limited also by the potential for transition to a detonation, as explained in the relevant chapters.

A.1.3.2(2) For information on deflagration venting, see NFPA 68, *Standard on Explosion Protection by Deflagration Venting*.

A.1.3.2(8) For information on cutting and welding practices, see NFPA 51B, *Standard for Fire Prevention During Welding, Cutting, and Other Hot Work*. For information on preparation of tanks, piping, or other enclosures for hot work, see NFPA 326, *Standard for the Safeguarding of Tanks and Containers for Entry, Cleaning, or Repair*.

A.3.2.1 Approved. The National Fire Protection Association does not approve, inspect, or certify any installations, procedures, equipment, or materials; nor does it approve or evaluate testing laboratories. In determining the acceptability of installations, procedures, equipment, or materials, the authority having jurisdiction may base acceptance on compliance with NFPA or other appropriate standards. In the absence of such standards, said authority may require evidence of proper installation, procedure, or use. The authority having jurisdiction may also refer to the listings or labeling practices of an organization that is concerned with product evaluations and is thus in a position to determine compliance with appropriate standards for the current production of listed items.

A.3.2.2 Authority Having Jurisdiction (AHJ). The phrase "authority having jurisdiction," or its acronym AHJ, is used in NFPA documents in a broad manner, since jurisdictions and approval agencies vary, as do their responsibilities. Where public safety is primary, the authority having jurisdiction may be a federal, state, local, or other regional department or individual such as a fire chief; fire marshal; chief of a fire prevention bureau, labor department, or health department; building official; electrical inspector; or others having statutory authority. For insurance purposes, an insurance inspection department, rating bureau, or other insurance company representative may be the authority having jurisdiction. In many circumstances, the property owner or his or her designated agent assumes the role of the authority having jurisdiction; at government installations, the commanding officer or departmental official may be the authority having jurisdiction.

A.3.2.4 Listed. The means for identifying listed equipment may vary for each organization concerned with product evaluation; some organizations do not recognize equipment as listed unless it is also labeled. The authority having jurisdiction should utilize the system employed by the listing organization to identify a listed product.

A.3.3.4 Combustible Dust. For purposes of this standard, a combustible particulate solid exhibiting only a fire hazard under normal, abnormal, and upset process conditions is excluded. Materials that cannot burn at ambient conditions can become combustible or explosible at elevated temperature, at elevated pressure, or when fuel vapors are present.

Copyright 2014 National Fire Protection Association (NFPA). Licensed, by agreement, for individual use and download on October 4, 2014 to LEADER and READER for designated user PATTARAPORN SRITRAKOOL. No other reproduction or transmission in any form permitted without written permission of NFPA. For inquires or to report unauthorized use, contact licensing@nfpa.org.

Both NFPA 69 and NFPA 68, *Standard on Explosion Protection by Deflagration Venting*, use the term *combustible dust* in its explosion hazard context. In other words, the term *combustible dust* in both NFPA 69 and NFPA 68 is synonymous with the term *explosible dust* used in the test standards.

Dusts traditionally have been defined as a material 420 µm or smaller (capable of passing through a U.S. No. 40 standard sieve). For consistency with other standards, 500 µm (capable of passing through a U.S. No. 35 standard sieve) is now considered an appropriate size criterion. The ratio of particle surface area to volume is a key factor in determining the rate of combustion. Combustible particulate solids with a minimum dimension more than 500 µm generally have a surface-to-volume ratio that is too small to pose a deflagration hazard. Flat platelet-shaped particles, flakes, or fibers with lengths that are large compared with their diameter usually do not pass through a 500 µm sieve yet could still pose a deflagration hazard. Many particulates accumulate electrostatic charge in handling, causing them to attract each other and form agglomerates. Often agglomerates behave as if they were larger particles, yet when they are dispersed they present a significant hazard. Consequently, it can be inferred that any particle that has a minimum dimension of 500 microns or less could behave as a combustible dust if suspended in air or the process specific oxidizer.

If the minimum dimension of the particulate is greater than 500 µm, it is unlikely that the material would be a combustible dust, as determined by test. The determination of whether a sample of combustible material presents a flash fire or explosion hazard could be based on a screening test methodology such as provided in ASTM E 1226, *Standard Test Method for Explosibility of Dust Clouds*. Alternatively, a standardized test method such as ASTM E 1515, *Standard Test Method for Minimum Explosible Concentration of Combustible Dusts*, could be used to determine dust explosibility.

There is some possibility that a sample will result in a false positive in the 20 L sphere when tested by the ASTM E1226 screening test or the ASTM E1515 test, due to the high-energy ignition source over-driving the test. When the lowest ignition energy allowed by either method still results in a positive result, the owner/operator can elect to determine whether the sample is a combustible dust with screening tests performed on a larger-scale (=1 m^3) enclosure, which is less susceptible to overdriving and will provide more realistic results.

The possibility for false positives has been known for quite some time and is attributed to "overdriven" conditions that exist in the 20 L chamber due to the use of strong pyrotechnic igniters. For that reason, the reference method for explosibility testing is based on a 1 m^3 chamber, and the 20 L chamber test method is calibrated to produce results comparable to those from a 1 m^3 chamber for most dusts. In fact, the US standard for 20 L testing (ASTM E 1226) states, "The objective of this test method is to develop data that can be correlated to those from the 1 m^3 chamber (described in ISO 6184/1 and VDI 3673)." ASTM E 1226 further states, "Because a number of factors (concentration, uniformity of dispersion, turbulence of ignition, sample age, etc.) can affect the test results, the test vessel to be used for routine work must be standardized using dust samples whose K_{St} and P_{max} parameters are known in the 1 m^3 chamber."

NFPA 68 also recognizes this problem and addresses it, stating:

"The 20 L test apparatus is designed to simulate results of the 1 m^3 chamber; however, the igniter discharge makes it problematic to determine K_{St} values less than 50 bar-m/sec. Where the material is expected to yield K_{St} values less than 50 bar-m/sec, testing in a 1 m^3 chamber might yield lower values."

The term *combustible dust* is not exclusive to dusts, but also includes fibers, fines, chips, chunks, flakes, and mixtures thereof. A definition of this breadth is necessary because it is crucial to address the fact that there is attrition of the material as it is conveyed. Pieces and particles rub against each other and collide with the walls of the duct as they travel through the system. The rubbing and collision break down the material and produce a mixture of pieces and much finer particles called *dusts*. Consequently, it is expected that every conveying system produces dusts, regardless of the starting size of the material, as an inherent by-product of the conveying process.

Most commercial test laboratories offer a screening ("go" or "no go") test to establish whether a dust sample is combustible . The test method commonly uses the test apparatus described in ASTM E 1226, *Standard Test Method for Explosibility of Dust Clouds*.

Any time a combustible dust is processed or handled, a potential for deflagration exists. The degree of deflagration hazard varies, depending on the type of combustible dust and the processing methods used.

A dust deflagration has the following four components:

(1) Combustible dust
(2) Dust dispersion in air or other oxidant
(3) Sufficient concentration at or exceeding the minimum explosible concentration (MEC)
(4) Sufficiently powerful ignition source such as an electrostatic discharge, an electric current arc, a glowing ember, a hot surface, welding slag, frictional heat, or a flame

If the deflagration is confined and produces a pressure sufficient to rupture the confining enclosure, the event is, by definition, an *explosion*.

Evaluation of the hazard of a combustible dust should be determined by the means of actual test data. Each situation should be evaluated, and applicable tests should be performed under conditions that will be a conservative representation of the operations under normal, abnormal, and upset conditions. The following factors are sometimes used in determining the deflagration hazard of a dust:

(1) MEC as defined in ASTM E 1515, *Standard Test Method for Minimum Explosible Concentration of Combustible Dusts*
(2) Minimum ignition energy (MIE) as defined in ASTM E 2019, *Standard Test Method for Minimum Ignition Energy of a Dust Cloud in Air*
(3) Particle size distribution
(4) Moisture content as received and as tested
(5) Maximum explosion pressure at optimum concentration
(6) Maximum rate of pressure rise at optimum concentration
(7) K_{St} (normalized rate of pressure rise) as defined in ASTM E 1226
(8) Layer ignition temperature as defined in ASTM E 2021, *Standard Test Method for Hot-Surface Ignition Temperature of Dust Layers*
(9) Dust cloud ignition temperature as defined in ASTM E 1491, *Standard Test Method for Minimum Autoignition Temperature of Dust Clouds*
(10) Limiting oxidant concentration (LOC) to prevent ignition
(11) Electrical volume resistivity
(12) Charge relaxation time
(13) Chargeability

Copyright 2014 National Fire Protection Association (NFPA). Licensed, by agreement, for individual use and download on October 4, 2014 to LEADER and READER for designated user PATTARAPORN SRITRAKOOL. No other reproduction or transmission in any form permitted without written permission of NFPA. For inquires or to report unauthorized use, contact licensing@nfpa.org.

It is important to keep in mind that as particulate is processed, handled, or transported the particle size generally decreases due to particle attrition. Consequently, it is often necessary to evaluate the explosibility of the particulate at multiple points along the process. Where process conditions dictate the use of oxidizing media other than air (nominally taken as 21 percent oxygen and 79 percent nitrogen), certain of the tests should be conducted in the appropriate process-specific medium.

A.3.3.5 Combustible Particulate Solid. Combustible particulate solids include dusts, fibers, fines, chips, chunks, flakes, and mixtures of these. A definition of this breadth is necessary because it is crucial to address the fact that there is attrition of the material as it is conveyed. Pieces and particles rub against each other and collide with the walls of the duct as they travel through the system. The rubbing and collision break down the material and produce a mixture of pieces and much finer particles, called dusts. Consequently, it is expected that every conveying system produces dusts, regardless of the starting size of the material, as an inherent by-product of the conveying process.

A.3.3.16 Flame Arrester. The emerging gases are sufficiently cooled to prevent ignition on the protected side.

A.3.3.19 Flammable Limits. Flammable limits for gases and vapors are typically defined as volume percentages, whereas flammable limits for dusts are defined as mass concentrations (mass per unit volume). When expressed in mass concentration units, the lower flammability limit is referred to as the minimum explosible concentration (MEC).

See NFPA 325, *Guide to Fire Hazard Properties of Flammable Liquids, Gases, and Volatile Solids.* (Note: Although NFPA 325 has been officially withdrawn from the *National Fire Codes*®, the information is still available in NFPA's *Fire Protection Guide to Hazardous Materials.*)

A.3.3.22 Hybrid Mixture. In certain processes, flammable gases can desorb from solid materials. If the solid is combustible and is dispersed in the gas–oxidant mixture, as can be the case in a fluidized bed dryer, a hybrid mixture can also result.

A.3.3.24 Isolation. Stream properties include deflagration, mass flow, and ignition capability.

A.3.3.25 Limiting Oxidant Concentration (LOC). Materials other than oxygen can act as oxidants. The LOC depends upon the temperature, pressure, and fuel concentration as well as the type of diluent. Preliminary results of the ASTM E 2079, *Standard Test Methods for Limiting Oxygen (Oxidant) Concentration in Gases and Vapors*, round robin tests for gases and vapors revealed that the LOC data that were obtained using different test methods and that are listed in a majority of reference publications are nonconservative. The old Bureau of Mines data were obtained mostly in a 50 mm diameter flammability tube. This diameter might be too small to mitigate the flame-quenching influence, thereby impeding accurate determination of the LOC of most fuels. The 4 L minimum volume specified in ASTM E 2079 would correspond to a diameter of at least 200 mm (7.9 in.). As a result, some LOC values determined using this standard are approximately 1 percent by volume oxygen lower than the previous values measured in the flammability tube, and a few are even up to 2 percent by volume lower. The lower LOC values obtained in larger chambers are more appropriate for use in fire and explosion hazard assessment studies. A data comparison can be found in Table A.3.3.25.

Table A.3.3.25 Effect of Test Enclosure on LOC Values When Using Nitrogen as Diluent

	LOC Values	
Gas or Vapor	**Flammability Tube 5 cm Diameter* (% by Volume)**	**120 L Sphere 60 cm Diameter† (% by Volume)**
Hydrogen (H_2)	5.0	4.6
Carbon monoxide (CO) (at high humidity)	5.5	4.8
Methane (CH_4)	12.0	11.2
Ethylene (C_2H_4)	10.0	8.5
Propane (C_3H_8)	11.5	10.6

*Data from J. M. Kuchta, U.S. Bureau of Mines, Bulletin 680, 1985.

†Data from Isaac Zlochower, PRL (NIOSH – Pittsburgh Research Laboratory) 2005, unpublished and not peer-reviewed.

Note: The data were obtained in accordance with ASTM test method E 2079, at 1 atm and at 20°C–23°C (68°F–73°F) on N_2-Air-Fuel mixtures. Electric spark was created by the discharge of a 54°C (130°F) capacitor, initially charged to 300 V, through a 15 kV transformer. The standard criterion [i.e., minimum 6.9 kPa (1 psi) or 7 percent absolute pressure rise] was used to detect ignition.

Generally, LOC decreases as the pressure or temperature prior to ignition increases. Best practice is to test the LOC at the appropriate temperature and pressure. Deviations from the test fuel composition and temperature might possibly be accounted for by using appropriate techniques. For dusts, an appropriate test apparatus should be used in conjunction with a strong ignition source, such as described in the draft of standard ASTM WK 1680 *Test Method for Limiting Oxygen (Oxidant) Concentration of Combustible Dust Clouds*, being developed by the ASTM E 27.05 Explosibility and Ignitability of Dust Clouds Committee, or in CEN EN 14034-4, *Determination of Explosion Characteristics of Dust Clouds,* Part 4.

A.3.3.34 Reduced Pressure (P_{red}). P_{red} is the maximum reduced pressure that a deflagration will produce when a protection system such as venting, suppression, or heat removal functions. P_{red} can be calculated or measured during testing. The calculated value will normally be higher than what is actually achieved.

A.3.3.35 Self-Decomposing Mixtures. Chemicals such as acetylene or ethylene oxide are self-decomposing mixtures.

A.6.1 It should be recognized that there are other methods for preventing combustion. These include changing the process to eliminate combustible material either used or generated in the process. (Deflagration venting is not addressed in this standard; see NFPA 68, *Standard on Explosion Protection by Deflagration Venting.*)

A.6.6 Inspection, maintenance, and operator training are necessary requirements of any explosion prevention system. Reliability of the system and its instrumentation is only as good as the inspection and periodic preventive maintenance they receive. Operator response and action to correct adverse conditions, as indicated by instrumentation or other means, are only as good as the frequency and thoroughness of training provided.

Copyright 2014 National Fire Protection Association (NFPA). Licensed, by agreement, for individual use and download on October 4, 2014 to LEADER and READER for designated user PATTARAPORN SRITRAKOOL. No other reproduction or transmission in any form permitted without written permission of NFPA. For inquires or to report unauthorized use, contact licensing@nfpa.org.

A.6.6.1 Analyzers and other system instrumentation can require more frequent periodic inspection than that required for other components of the system. Inspections should be made according to the manufacturer's recommendations or as required by operating conditions and inspection history.

A.7.1.1 Operation of a system with an oxidant concentration low enough to prevent a deflagration does not mean that incipient fires are prevented. Smoldering can occur in fibrous materials or dust layers at very low oxidant concentrations, which can ultimately result in a fire or explosion when exposed to higher oxidant concentrations. Caution should be exercised when such systems are opened to the air. *(See Annex B for a discussion of the control of combustible gas mixtures. Also see Annex C for LOCs.)*

A.7.1.3 Combustible dusts that need passivation layers to prevent ignition are one example of a fire or explosion hazard associated with a material leaving the low oxygen environment. The processing in such an environment can prevent the formation of the oxide layer needed for passivation.

Another example is flammable gases that are normally processed in inerted glove boxes to prevent ignition where the process piping passes through other processing areas that rely on controls such as oxidant exclusion via double jacket piping.

Reviews of these potential low oxygen applications should consider these effects.

A.7.2.1 Purge gases generated by any of the acceptable methods described in this standard might not necessarily be compatible for all applications. In general, the physical and chemical properties of the combustible materials involved govern the type and required purity of the purge gas needed. Chlorinated and fluorinated hydrocarbons are sometimes used. Although these gases are more costly than carbon dioxide or nitrogen, the allowable oxygen concentration might be higher. The user is cautioned, however, that some halogenated hydrocarbons, carbon dioxide, and even nitrogen at elevated temperatures might react violently with certain dusts. Also, such gases might not be effective in providing explosion protection for certain combustible metal dusts, such as aluminum, magnesium, titanium, zirconium, thorium, and uranium. Argon, helium, and other rare gases might have to be used for inerting certain systems.

In general, personnel should not enter enclosures where the atmosphere is oxygen deficient. If it is necessary to enter such an enclosure, personnel should use self-contained breathing apparatus, preferably the positive-pressure type. Canister-type gas masks should not be used; they do not supply oxygen and do not offer any protection. The toxicity of certain purge gases should be recognized. The potential for accidental release of purge gases into normally occupied areas should be recognized and the necessary precautions taken.

A.7.2.1(9) This requirement is based upon incidents discussed in "Loss of Inerting Due to Multiple Exhaust Vents." This paper discusses one potential cause.

A.7.2.2.1 The process analysis generally includes, but is not limited to, review of the general scope of work, process design criteria, process description, material flow diagrams, basis for deflagration protection, basis for the physical and chemical properties of the process material(s), equipment layouts, detailed mechanical drawings and specifications, supporting engineering calculations, and process and instrumentation diagrams. One method by which this requirement can be satisfied is with a process hazard analysis conducted in accordance with the methods outlined by the AIChE Center for Chemical Process Safety in *Guidelines for Hazard Evaluation Procedures*.

A.7.2.3.1 The values were obtained under the conditions specified in the tables found in Annex C. Higher energy ignition sources, higher temperatures, or higher pressures could reduce the LOC values shown. LOC values for dusts of a particular chemical composition could also differ with variations of physical properties such as particle size, shape, and surface characteristics. A particular dust could have combustion properties that differ from those shown in the tables in Annex C. Tabular data for combustion characteristics are provided as examples only.

A.7.2.4.4 Under certain conditions of reducing atmospheres in the presence of sulfur compounds, pyrophoric iron sulfides could form in air-starved atmospheres. When air is admitted into such an atmosphere, the iron sulfides could ignite. A typical procedure for controlling such ignition is to thoroughly wet the iron sulfide deposits with water and maintain a wetted surface until all deposits are removed and disposed of safely and properly. Another method is to maintain an inert atmosphere in the tank or vessel containing pyrophoric iron sulfides. API 2016, *Guidelines and Procedures for Entering and Cleaning Petroleum Storage Tanks*, provides information covering the control and removal of pyrophoric iron sulfide deposits.

Rapid oxidation tends to occur when the deposits dry out. Thus, even though air is admitted slowly, nothing happens until the deposits dry out, a process that could take more time than used to admit air. A common practice in industries that deal with such deposits is to keep them wet until they can be removed to a safe location.

Iron sulfide deposits are often thick or are shielded from air by layers of nonreactive materials. When the layers are subsequently disturbed, the deposits could ignite. Furthermore, although procedures are often used to neutralize or remove such deposits before admitting air, it is often difficult to remove all traces of pyrophoric material.

A.7.3.2(4) The rate of application for steam inerting should be sufficient to maintain a steam concentration of at least 1.13 kg/min · 2.83 m^3 (2.5 lb/min · 100 ft^3).

A.7.5.5 This requirement is intended to provide for a sufficient number of isolation points to facilitate maintenance, while holding the number of isolation valves to a manageable number so that accidental shutoff is minimized.

A.7.5.7 Consideration should be given to providing a positive means of preventing the backflow of purge gas into other systems where such flow would present a hazard.

A.7.7.1 The objective is to maintain operation outside of the flammable region. This can be achieved by adding either enrichment gas (natural gas or methane) or an inert gas such as nitrogen. In either case, a safety factor should be maintained between the operating condition and the closest point of the flammable region. Instrumentation should have redundancy, depending on the criticality of the operation.

A.7.7.2.1 As shown in Annex B, any system of fuel plus oxidant plus inert gas requires a certain minimum concentration of oxidant for combustion. For oxidant concentrations less than the LOC, no combination of fuel plus diluent can result in a flammable mixture.

A.7.7.2.4 Calculation of the LOC can result in an overestimation of up to at least 2 volume percent oxygen relative to measured values, and this potential error should be taken into account when applying the safety margin.

Copyright 2014 National Fire Protection Association (NFPA). Licensed, by agreement, for individual use and download on October 4, 2014 to LEADER and READER for designated user PATTARAPORN SRITRAKOOL. No other reproduction or transmission in any form permitted without written permission of NFPA. For inquires or to report unauthorized use, contact licensing@nfpa.org.

A.7.7.2.5 See A.7.7.2.7.

A.7.7.2.7 Figure A.7.7.2.7 illustrates the oxidant control limits as a function of LOC with and without continuous monitoring.

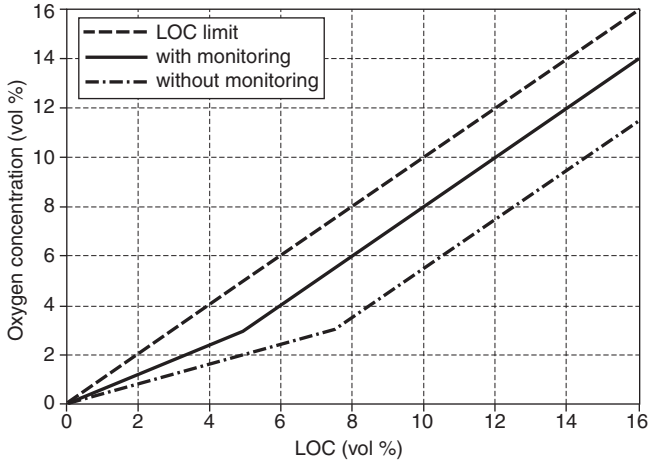

FIGURE A.7.7.2.7 Oxidant Control Limits as a Function of LOC.

A.7.7.2.7.2 Products with relatively high vapor pressures can, by themselves, maintain an atmosphere above the upper flammability limit of the vapor. Where flammable atmospheres are predicted, it is common practice to use a padding gas to maintain the oxygen content at less than the LOC. Because such maintenance typically involves almost complete replacement of air, oxygen analysis of the vapor space is not generally needed. It should be ensured that padding gas capacity maintains padding under adverse conditions, such as simultaneous pump-out of several tanks connected to the same padding supply, possibly with a contraction of vapor volume caused by a sudden summer rainstorm. Such conditions might cause air to be drawn into a container to avoid underpressure damage. Also, some monomer tanks need several percent of oxygen to activate dissolved inhibitors. Such tanks might need oxygen monitoring.

A.7.7.3.1 The use of enrichment gas (methane or natural gas) serves the following three purposes:

(1) It elevates the total fuel concentration and can raise it to above the upper flammable limit (UFL).
(2) It decreases the oxidant concentration in proportion to the concentration of enrichment gas.
(3) It elevates the LOC due to the better diluent qualities of enrichment gas relative to nitrogen in the air.

Where header systems continuously convey vapors to a combustion device such as a flare, operation above the UFL can greatly reduce the quantity of enrichment gas relative to operation below the LOC.

Marine vent collecting header operation is regulated by 33 CFR 154.

Nonmarine vent collection headers operated near atmospheric pressure and not containing any vapor with a UFL greater than 75 percent in air, or oxygen in concentrations greater than can be derived from ambient air, can be rendered nonflammable by the addition of 25 volume percent or more of natural gas or methane. The use of oxygen analyzers to control enrichment gas flow is practical only in cases where the nitrogen-to-oxygen ratio is the same as in the air. Where a container has been partly inerted with a diluent such as nitrogen, enrichment gas should be added using flow control, since control via oxygen analyzers would otherwise add insufficient enrichment gas to provide nonflammability. The flow control system can be augmented with gas analyzers to verify correct operation during installation and for periodic performance checks.

No specific recommendations can be provided, and testing is necessary to develop an enrichment method under the following conditions:

(1) Where system temperatures and pressures significantly exceed atmospheric conditions
(2) Where gases with UFL above 75 percent in air are involved
(3) Where oxygen enrichment might occur

The UFL generally increases with increased temperature and pressure; it can be sensitive to the precise gas composition and test conditions. Special procedures are needed for decomposable gases, and such procedures can involve inerting, enrichment, or deflagration isolation systems as described in Chapter 11.

The UFL is a continuous function of oxygen concentration. The greatest UFL corresponds to pure oxygen as the oxidant, and the smallest corresponds to the LOC concentration of oxidant *(see Figure B.1)*. Systems containing high concentrations of fuel might be safely operated above the LOC, provided that they are nonflammable with respect to the actual UFL envelope. If the oxygen concentration in a system is constrained below a value whose corresponding UFL is U, a safety factor should be applied such that the fuel concentration in the system is maintained at not less than 1.7 U. This is consistent with the method in 33 CFR 154 for enrichment of marine vapor collection headers with air as the oxidant. Realistic testing is required to develop the UFL locus as a function of oxygen concentration under worst credible case operating conditions.

A.8.1 Chapter 8 applies to both flammable vapors and combustible dusts. References to basic design considerations and control at a fraction of LFL are also applicable to MEC.

See Annex B for a discussion of the control of flammable gas mixtures. Also, see Annex D for information on calculating the time required for ventilation.

A.8.2.2 See NFPA 325, *Guide to Fire Hazard Properties of Flammable Liquids, Gases, and Volatile Solids.* (Note: Although NFPA 325 has been officially withdrawn from the *National Fire Codes*®, the information is still available in NFPA's *Fire Protection Guide to Hazardous Materials.*)

A.8.2.3.1 See A.7.2.2.1.

A.8.3.1 The combustible concentration limits for both gases and dusts are based on the total volume of the protected enclosure and assume a uniform concentration throughout. The ability to maintain uniform concentration throughout the enclosure over time should be considered when applying this protection method.

Calculated combustible dust concentrations in enclosed equipment should account for the potential suspension of accumulated and stored dust in all stages of normal operation and foreseeable upset conditions. These concentrations should be compared to 25 percent of the measured minimum explosible concentrations (MECs) for the dust material with

Copyright 2014 National Fire Protection Association (NFPA). Licensed, by agreement, for individual use and download on October 4, 2014 to LEADER and READER for designated user PATTARAPORN SRITRAKOOL. No other reproduction or transmission in any form permitted without written permission of NFPA. For inquires or to report unauthorized use, contact licensing@nfpa.org.

the particle size distribution present in the enclosed equipment, or to MEC values for smaller particle sizes.

The combustible concentration limits in 8.3.1 do not necessarily preclude structural failure of the enclosure during a partial volume deflagration involving a near-optimum or near-stoichiometric concentration of combustible mixture in a fraction of the enclosure volume. Calculation procedures to account for partial volume flammable gas or dust deflagrations are described in NFPA 68. *(See also Ogle 1999 and Jo 2004.)*

Minimum combustible dust quantities, M_{dust}, capable of producing partial volume dust deflagrations with pressures exceeding the maximum acceptable enclosure pressure, P_{red}, can be estimated from the following equation, which is based on the partial volume equations in NFPA 68, Chapter 8.

$$M_{dust} = \frac{c_w V P_{es}}{P_{max}} \quad \textbf{(A.8.3.1)}$$

where:

M_{dust} = minimum combustible dust quantity [kg]
V = enclosed equipment volume [m^3]
P_{es} = enclosure strength (⅔ ultimate strength per 3.3.13) [Pa]
c_w = worst-case dust concentration (concentration that produces the largest pressure in a closed vessel deflagration) [kg/m^3]
P_{max} = maximum full volume deflagration pressure measured using the ASTM E1226 or equivalent test method [Pa]

Therefore, suspendable dust quantities should be maintained below the calculated value of M_{dust} to preclude possible structural failure during a partial volume dust deflagration.

A.8.3.2 The combustible concentration can be reduced by recirculating the atmosphere in which it is contained through a catalytic oxidation unit where the combustible material and oxidant undergo catalytic oxidation at concentrations below the lower flammable limit (LFL).

A.8.4.1 Reserved.

A.9.1 Predeflagration detection and control systems are typically used where a specific ignition source has been identified as the most probable means of ignition. The detection method is often limited to detect the identified ignition source. Possible means of detection include choosing the frequency range of an optical detector or detecting specific gases indicative of smoldering combustion or the onset of thermal degradation. Such systems are not designed to detect all possible ignition sources and therefore might not provide the same level of protection as other explosion prevention systems.

A.9.5.1.1 See A.7.2.2.1.

A.9.6.1 The design basis generally includes, but is not limited to, the general scope of work, design criteria, process description, material flow diagrams, basis for deflagration protection, and the basis for and the physical and chemical properties of the process materials. The design generally includes, but is not limited to, equipment layouts, detailed mechanical drawings, specifications supporting engineering calculations, and process and instrumentation diagrams.

A.10.1 Explosion suppression systems mitigate the hazardous effects of a deflagration within a protected enclosure by detecting the deflagration in the early stages of formation (incipient) and extinguishing the fireball before the pressure exceeds the pressure resistance of the enclosure. An explosion suppression system typically consists of explosion detectors, high rate discharge (HRD) suppressors with appropriate dispersion nozzles, and a control panel. Explosion isolation is often used in conjunction with these systems to minimize the potential for flame propagation from the protected enclosure. Explosion suppression systems can be used when the combustible products are toxic and can be used irrespective of the location of the protected enclosure.

Explosion suppression systems typically use dry chemicals (sodium bicarbonate or monoammonium phosphate) or water as suppressants. Injection of a suppressant into the propagating flame front of the incipient explosion reduces the temperature of the combustible material below a level necessary to sustain combustion. Thermal quenching (heat absorption) is the principal mechanism utilized by explosion suppressants.

Explosion suppression systems often utilize methods such as paired detectors, detector voting, and vibration isolation devices to reduce the possibility of inadvertent activations. To aid in the investigation of a system activation, an indicating device denoting the actuating detector is sometimes used.

Explosion suppression systems have been applied in volumes from 0.2 m^3 to 1500 m^3 (7.1 ft^3 to 52,972 ft^3) and against a wide variety of combustible materials.

A.10.1.3 The effectiveness of a suppression system is dependent on the ability of the system to deliver sufficient quantities of suppressant into the incipient deflagration flame front to extinguish the combustion before destructive pressure levels are developed in the protected enclosure. Rapid detection and rapid response are essential for the success of a suppression and isolation system. In fact, an improperly designed or maintained suppression system could increase the probability of failing dangerously.

Detection is most often based on the system reaching a preset pressure or a pressure rate of rise. This requires a finite and not insignificant amount of time. The time required for detection is dependent primarily upon the preset conditions, the vessel volume, and the K_{St} or K_G. The detection time will increase as the volume increases and will decrease as the K_{St} (K_G) increases. A dust with a low K_{St} in a large volume will take considerably longer for detection than a high K_{St} dust in a small volume. The effect of delayed detection will allow the pressure to continue to increase within the protected enclosure. In order to maintain an equivalent maximum suppressed pressure the quantity of discharge points or size of discharge orifice would need to be increased.

Suppressant discharge pattern is a limiting factor when determining the viability of protecting large-scale enclosures with a particular suppressor. The suppressor discharge orifice, suppressor driving pressure, and the efficiency of the discharge nozzle determine the suppressant concentration delivery as a function of time. The explosibility characteristics of the material and the physical characteristics of the enclosure are also critical in determining the number and location of detection devices and suppressors.

A.10.2.3 When the pressure resistance of vessel is not available from the manufacturer, the owner or operator should determine this pressure resistance by calculation based on condition of actual enclosure. If the owner or operator chooses to use generic values for typical construction, this could result in enclosure failure. FM Data Sheet 7.76, "Prevention and Mitigation of Combustible Dust Explosions and Fire," provides generic values for typical construction.

Copyright 2014 National Fire Protection Association (NFPA). Licensed, by agreement, for individual use and download on October 4, 2014 to LEADER and READER for designated user PATTARAPORN SRITRAKOOL. No other reproduction or transmission in any form permitted without written permission of NFPA. For inquires or to report unauthorized use, contact licensing@nfpa.org.

A.10.3.1 Experience has shown that performing maintenance operations without disarming a suppression system could result in inadvertent discharge of the suppression system.

A.10.4.2.1 The intent is to require that explosion protection systems be reviewed by an independent organization to verify that the system is adequate for the hazard present. Therefore, an owner or purchaser is required to obtain confirmation of that review.

In practice, this independent organization has been a specialized testing organization that listed or approved the protection system for specified hazards and within specified limits. This gives independent approval of the system, while the manufacturer retains proprietary details of their products and systems.

Currently, within the European Union (EU), the explosion suppression system manufacturers have their systems certified to CEN standards. This certification is a requirement under regulations within the EU.

The intent of this standard is that either of these approaches are acceptable.

A.10.4.3.1.1 The process analysis generally includes, but is not limited to, review of the general scope of work, process design criteria, process description, material flow diagrams, basis for deflagration protection, basis for the physical and chemical properties of the process material(s), equipment layouts, detailed mechanical drawings and specifications, supporting engineering calculations, and process and instrumentation diagrams. One method by which this requirement can be satisfied is with a process hazard analysis conducted in accordance with the methods outlined by the AIChE Center for Chemical Process Safety in *Guidelines for Hazard Evaluation Procedures*.

A.10.4.4.1 The design basis generally includes, but is not limited to, the general scope of work, design criteria, process description, material flow diagrams, basis for deflagration protection, and basis for and the physical and chemical properties of the process materials. The design generally includes, but is not limited to, equipment layouts, detailed mechanical drawings, specifications, supporting engineering calculations, and process and instrumentation diagrams.

A.10.5.2.2 Typical approaches include two out of three voting to reduce spurious failures. Another approach might be two detectors in an "and" configuration combined in an "or" configuration with an identical pair.

A.10.5.3 In addition to local visual and audible trouble signals, the control panel can provide an electrical output means to produce this function externally. When an external means is utilized, it should be implemented full time and confirmed at system acceptance.

A.10.6.1 Detection devices that respond to radiant energy might be used, provided that the application environment does not inhibit their proper operation. Airborne dust particles, dust coating of the detector viewing window, certain gases, and the distance to the ignition source might inhibit sufficiently rapid response to the hazard.

A.10.7.1 Examples of electrically operated actuating devices include detonators, gas generators, solenoids, linear actuators, or other devices that are activated to release suppressant into the protected vessel.

A.10.8 Halogenated hydrocarbons, such as bromochloromethane, or dry chemical agents might be used with most combustibles. The suitability of the suppressant should be determined if elevated temperatures or pressures are anticipated or if the oxidant is a material other than air.

Water might also be used as a suppressant if it can be demonstrated to be effective. If ambient or process temperatures below 0°C (32°F) are expected, freeze protection might be necessary.

A.10.8.1 The agent can introduce contamination or chemical hazards when used in combination with certain process chemicals or materials of construction. The choice of agent should include an evaluation of all potential adverse interactions between the agent and process. A chemical interaction matrix, for example, the NOAA Reactivity Worksheet, is an excellent tool to use as a part of this evaluation.

A.11.1.1 It is frequently impossible to design and operate equipment without interconnecting pipes or ducts. Uses for pipes or ducts include conveying, transferring, and ventilating. Where the pipes or ducts contain flammable or combustible materials plus an oxidant, ignition can result in flame spread throughout the interconnected equipment. Such flame spread can sometimes increase the violence of the deflagration, resulting in pressure piling and accelerated rates of pressure rise in the interconnected equipment from flame-jet ignition. Pressure piling can increase maximum pressure, P_{max}, in closed vessels, thus increasing the demands of deflagration pressure containment; and flame-jet ignition can increase deflagration venting requirements (see NFPA 68). In extreme cases, the accelerating effect of turbulent combustion through pipes or ducts plus any increased effects from pressure piling can result in detonations.

Other factors such as elevated operating pressure, elevated temperature, or oxygen concentration can be expected to intensify the combustion process.

A.11.1.2 Table A.11.1.2 provides a quick reference chart that highlights the various isolation techniques and their application as an isolation protection system.

A.11.1.5 The design of an active isolation system is based on the relative timing of the two key processes: the time required for the detection of an explosion and the creation of a barrier versus the time it takes for the propagating flame front to reach that barrier. This usually results in the determination of a minimum barrier placement, that is, the shortest distance at which the barrier will be in place before the flame front arrives. Both phenomena are complex, with multiple interrelated variables.

Additional critical complexities arise from the fact that exact fuel concentration at the time of ignition and the ignition location are unknown. The system design should consider the entire range of credible concentrations, and possible ignition locations. Some systems (e.g., active isolation systems and float valves) are particularly vulnerable to ignition near the pipe inlet, as well as non-optimal fuel–oxidant mixtures. Detection is most often based on the system reaching a preset pressure or a pressure rate of rise. This requires a finite and not insignificant amount of time. The time required for detection is dependent primarily on the preset conditions, the vessel volume and the K_{st} or K_G. The detection time will increase as the volume increases and will decrease as the K_{St} (K_G) increases. A dust with a low K_{st} in a large volume will take considerably longer for detection than a high K_{St} dust in a small volume.

Copyright 2014 National Fire Protection Association (NFPA). Licensed, by agreement, for individual use and download on October 4, 2014 to LEADER and READER for designated user PATTARAPORN SRITRAKOOL. No other reproduction or transmission in any form permitted without written permission of NFPA. For inquires or to report unauthorized use, contact licensing@nfpa.org.

Table A.11.1.2 Isolation Features of Pipe and Duct Protection Systems

Isolation System	Type	Fuel Type	Deflagration Isolation	Ignition Source Isolation	Flow (Pressure) Isolation
Chemical barrier	Active	Dust, gas	Yes	Yes	No
Mechanical valve	Active	Dust, gas	Yes	Yes	Yes
Actuated float valve	Active	Gas	Yes	Yes	Yes
Actuated pinch valve	Active	Dust, gas	Yes	Yes	Yes
Rotary valves*	Passive	Dust	Yes	*	Yes
Flame arresters	Passive	Gas	Yes	Yes	No
Flame front diverters	Passive	Dust	No	No	Yes
Liquid seal	Passive	Gas	Yes	Yes	No
Float valve	Passive	Gas	Yes	Yes	Yes

*Rotary valves are capable of preventing flame front passage under certain conditions but do not always prevent the passage of burning embers.

The effect of delayed detection can be to allow the flame to propagate farther and faster before isolation is initiated. This in turn can require longer minimum placements. Optical detection, normally located on the duct at the interconnection, is not affected in this manner. It does, however, require that the flame has entered the duct in order to be detected.

The time required to create a barrier depends upon the type of isolation process. For chemical isolation, the time is determined by factors such as the time to initiate discharge, the discharge velocity, and duct diameter. The discharge velocity is affected by the gas pressure used to propel the agent as well as the length and diameter of the discharge piping. Mechanical isolation (fast-acting valves) is characterized by the time required for gate closure, which depends upon the closure energetics *(see A.11.2.2.2)* and the duct diameter. Float and pinch valves have similar dependencies.

The flame propagation characteristics (velocity, pressure) will determine the safe minimum and maximum locations of the isolation devices. It is well established that flames can accelerate in ducts so that flame speed or velocity increases with distance. Flame speed may be used to determine the flame arrival time at points away from the ignition. That time is balanced against the detection and barrier formation time mentioned earlier. Flame speed and acceleration are affected most strongly by fuel characteristic (K_{St}, K_G), turbulence and bends, conveyance flow velocity, and vessel protection (venting, suppression, containment). Location of the ignition within the vessel affects the time when flame enters the duct as well.

The conveyance flow (Barton, 2002), with respect to the ignition location, can either oppose or enhance flame propagation. This is most commonly associated with a vessel and its inlet (opposed) and outlet (enhanced). The net effect could be to either increase (at the outlet) or decrease (at the inlet) the minimum placement, although decreasing the inlet minimum is not encouraged (recommended).

The principles of relating the flame propagation and arrival parameters with the isolation dynamics are given in Chatrathi (2001), Siwek (1997), Roser (1999), Chatrathi (1996), and Moore (2004).

Approaches to solving this problem are given in Moore and Spring (2004); Chatrathi, Going, and Grandestaff (2001); Chatrathi and Going (1996); and Siwek and Moore (1997).

A.11.2 Process equipment, such as mills, spray dryers, dust collectors, blowers, and vacuum pumps, is regularly connected together by piping, ducts, chutes, conveyors, and so forth. An explosion beginning in one point in the process can propagate through these interconnections to other parts of the process, both upstream and downstream. Generally isolation techniques are necessary unless a qualified risk analysis is performed and a determination is made based on both probability and consequence that the risk is acceptable to the AHJ. Flame spread via propagation inside ducting or piping is somewhat unpredictable for dusts. Tests have shown that propagation is much less likely under certain conditions. Piping less than 100 mm (4 in.) diameter is far less likely to provide a conduit for flame spread than larger diameters. Dense phase pneumatic transfer (air velocities down near 183 m/min (600 fpm), and solids loading ratios greater than 30) is also much less likely to provide a conduit for flame spread propagation than for dilute phase pneumatic transfer (air velocities in the region of 672 m/min to 1098 m/min (2200 fpm to 3600 fpm), and solids loading ratios not greater than 15). It has been reported by Pineau that it is not uncommon for propagation to occur as few as one time in ten in controlled experiments for 150 mm piping even for dilute phase systems. However, recent testing has shown that propagation is more likely with dust concentrations in the lean region. Metal dusts are more likely to propagate deflagrations. For organic dusts, where small diameter pipes with dense phase transfer are utilized, the need for isolation techniques could be obviated if the hazard analysis is acceptable to the authority having jurisdiction. For interconnected vessels that are relatively close together, measures to reduce P_{red} for each interconnected vessel, taking into account that propagation could occur, would eliminate the need for isolation techniques.

A.11.2.1.1 The process is similar to that of suppression in that the agent absorbs the heat of the flame and terminates propagation.

A.11.2.1.4.3 ASME *Boiler and Pressure Vessel Code*, Section XII, has been developed and published at the request of U.S. Department of Transportation (DOT) to cover pressure vessels that are transportable containers. DOT requirements are anticipated to embrace ASME *Boiler and Pressure Vessel Code*, Section XII, at a future date.

Copyright 2014 National Fire Protection Association (NFPA). Licensed, by agreement, for individual use and download on October 4, 2014 to LEADER and READER for designated user PATTARAPORN SRITRAKOOL. No other reproduction or transmission in any form permitted without written permission of NFPA. For inquires or to report unauthorized use, contact licensing@nfpa.org.

A.11.2.2 See Figure A.11.2.2(a) and Figure A.11.2.2(b).

A.11.2.2.2 Automatic fast-acting mechanical valves are actuated (closed) upon a signal from a detector (sensor) in the pipeline between two items of interconnected process equipment. The detector sends a signal to a control device, and the signal is relayed to the valve closure mechanism. Originally this control device was a compressed gas cylinder, which then discharges the compressed gas to a piston-cylinder assembly at the top of the valve, thereby closing the gate. The propellant is generally nitrogen at 33 barg to 60 barg (479 psi to 870 psi).

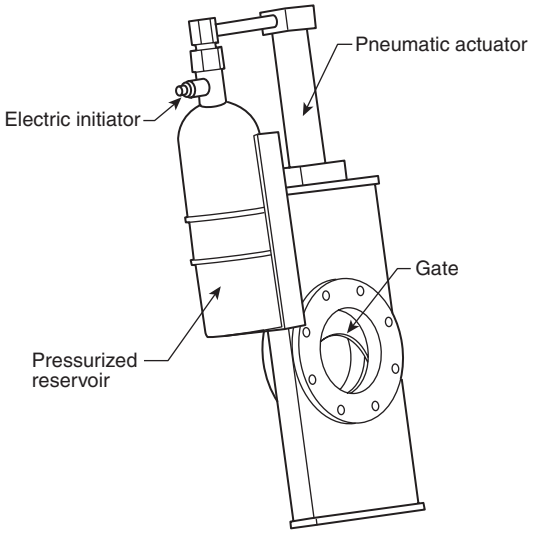

FIGURE A.11.2.2(a) Typical Fast-Acting Mechanical Valves Without Pressurized Reservoir.

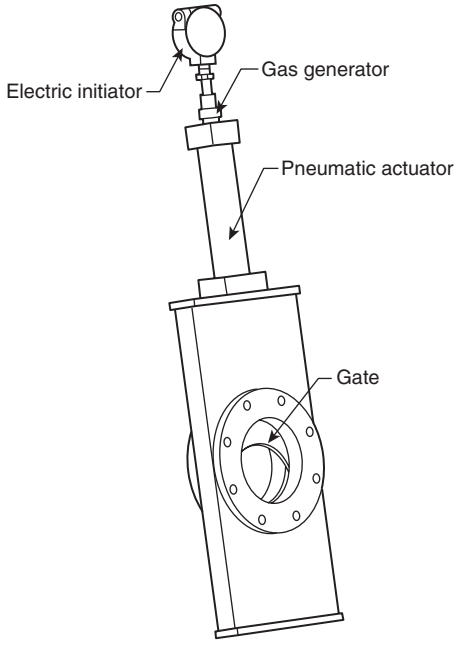

FIGURE A.11.2.2(b) Typical Fast-Acting Mechanical Valve with Pressurized Reservoir.

The valve separating the compressed gas and the piston must be rapidly opened. Mechanisms for this operation include rapid over-pressuring of a rupture disk by pyrotechnical (detonator) devices. In some systems, gas generating devices have replaced the pyrotechnics. Alternatively, gas generators alone have been used to generate the pressure required to rapidly close the valve gate. Plant-air actuated valves are also available.

A fast-acting slide gate isolation valve is shown in Figure A.11.2.2(a) and Figure A.11.2.2(b) and can be mounted in vertical, horizontal, or inclined piping. With this type of valve, the pipe area is completely open and can be built without pockets and dead corners, so that dust will not settle out or accumulate. Special dampers absorb the substantial forces from the closing device and prevent the slide from springing back after closure. The damping elements are exchangeable.

A.11.2.2.5 Fast-acting mechanical valves might be subjected to detonation pressures if placed beyond the design maximum location. However, they are not expected to provide protection under these conditions.

A.11.2.3.1 An example of an externally actuated float valve is shown in Figure A.11.2.3.1.



FIGURE A.11.2.3.1 Externally Actuated Float Valve.

A.11.2.3.2 Externally actuated float valves are used when low explosion overpressures are expected, and consequently flame propagation from equipment could occur if a self-actuated flow valve was used. These valves are operated by sensor-controlled gas flow [jets of gas from a high rate discharge (HRD) container or from a gas generator] through a hemispherical nozzle, which impinges upon the float (see Figure A.11.2.3.1. The externally actuated float valve functions only in one direction.

As with the self-actuated float valve, the valve plug (float) is pressed onto a valve seat on closing and held in place by a retaining device. In addition, the closed position can be indicated by an electrical signal from a limit switch. The float valve remains closed until the manual reset knob is operated from the outside.

A.11.2.3.4 The agent might introduce contamination or chemical hazards when used in combination with certain process chemicals or materials of construction. The choice of agent should include an evaluation of all potential adverse interactions between the agent and the process. A chemical

Copyright 2014 National Fire Protection Association (NFPA). Licensed, by agreement, for individual use and download on October 4, 2014 to LEADER and READER for designated user PATTARAPORN SRITRAKOOL. No other reproduction or transmission in any form permitted without written permission of NFPA. For inquires or to report unauthorized use, contact licensing@nfpa.org.

interaction matrix, for example, the NOAA Reactivity Worksheet, is an excellent tool to use as a part of this evaluation.

A.11.2.3.5(7) Float valves should be used for clean service only, as particulate solids can build up on the valve trim or valve seat and prevent tight closure.

A.11.2.4.1 See Figure A.11.2.4.1.

A.11.2.4.2 The valve trim (internals) is an elastomer pinch surrounded by a gas chamber. In the event of a deflagration, an electrical signal is sent from a sensor, typically mounted on a deflagration relief device, to an air tank mounted integral to the valve. The gas tank discharges gas to the chamber surrounding the elastomer pinch and compresses it, which pinches off flow in the pipeline. Because the pinch has relatively little mass, it is both very fast acting and imparts low shock to the piping. The pinch, however, can be adversely affected by sustained high temperatures such as might be encountered in a fire.

A.11.2.4.4(7) Where high velocities and very abrasive dusts are being handled, the pinch could be subject to abrasion wear. Pinch valves are not the best choice in these conditions.

A.11.3.2 Experience has shown that performing maintenance operations without disarming an isolation system could result in inadvertent system actuation.

A.11.4.2.1 The process analysis generally includes, but is not limited to, review of the general scope of work, process design criteria, process description, material flow diagrams, basis for deflagration protection, basis for the physical and chemical properties of the process material(s), equipment layouts, detailed mechanical drawings and specifications, supporting engineering calculations, and process and instrumentation diagrams. This analysis should consider startup, normal operation, normal shutdown, temporary operations, and emergency shutdown. One method by which this requirement can be satisfied is with a process hazard analysis conducted in accordance with the methods outlined by the AIChE Center for Chemical Process Safety in *Guidelines for Hazard Evaluation Procedures*.

A.11.4.3 The design basis generally includes, but is not limited to, the general scope of work, design criteria, process description, material flow diagrams, basis for deflagration protection, basis for fire protection systems, and the physical and chemical properties of the process materials. The design generally includes, but is not limited to, equipment layouts, detailed mechanical drawings, specifications, supporting engineering calculations, and process and instrumentation diagrams.

A.11.5.1 Detection devices that respond to radiant energy might be used, provided that the application environment does not inhibit their proper operation. Airborne dust particles, dust coating of the detector viewing window, certain gases, and the distance to the ignition source might inhibit sufficiently rapid response to the hazard.

A.11.6.1 Examples of electrically operated actuating devices include detonators, gas generators, solenoids, linear actuators, and other devices that actuate the isolation device.

A.11.7.3 In addition to local visual and audible trouble signals, the control panel can provide an electrical output means to produce this function externally. When an external means is utilized, it should be implemented full time and confirmed at system acceptance.

A.12.1 Isolation techniques can be active, which requires detection, control, and a pneumatic or electrical response that creates an isolating barrier; or passive, which responds to the deflagration pressure to create the isolating barrier. Active isolation systems are discussed in Chapter 11. See Table A.11.1.2 for isolation features of pipe and duct protection systems.

A.12.1.1 Process equipment, such as mills, spray dryers, dust collectors, and blowers, is commonly connected together by piping, ducts, chutes, conveyors, and so forth. An explosion beginning in one point in the process can propagate through these interconnections and start an explosion in other parts of the process, both upstream and downstream. Isolation methods can be used to interrupt or mitigate flame propagation, deflagration pressure, pressure piling, and flame-jet ignition

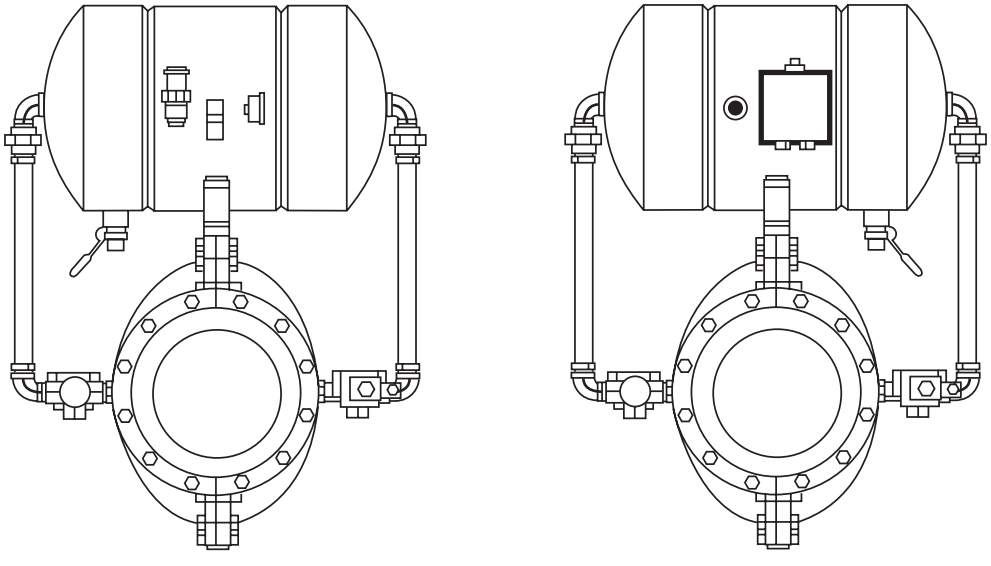

FIGURE A.11.2.4.1 Pinch Valve.

Copyright 2014 National Fire Protection Association (NFPA). Licensed, by agreement, for individual use and download on October 4, 2014 to LEADER and READER for designated user PATTARAPORN SRITRAKOOL. No other reproduction or transmission in any form permitted without written permission of NFPA. For inquires or to report unauthorized use, contact licensing@nfpa.org.

between items of equipment. Each isolation technique has unique application limitations.

A.12.2.1 Pressure piling and flame-jet ignition through interconnecting piping can be controlled by means of a flame front diverter. The basic principle of operation of this device is that the deflagration is vented at a point where the flow direction is typically changed by 180 degrees. Due to the inertia of the fast flow caused by the deflagration, the flow will tend to maintain its direction upward rather than making a sharp turn, as it would when the velocity is low (at normal conditions). When the high-speed deflagration flame continues upward, it pushes open either a hinged cover or bursts a rupture disk located at the top of the diverter, allowing the flame to be released to the atmosphere.

Some flame front diverters have demonstrated the ability to prevent flame propagation. In most cases, tests have indicated that diverters were not completely effective in preventing flame propagation; however, where this has occurred, the deflagration severity was reduced, and pressure piling did not occur or was less severe. Figure A.12.2.1 shows the typical application of flame front diverters. Siwek (Europex 1996) discusses some design details concerning flame front diverters.

More information about flame front diverters is presented in books by Bartknecht (1989) and Eckhoff (2003). Bartknecht (1989) recommends not using a flame front diverter as the only means of isolation if it is intended to stop the flame propagation.

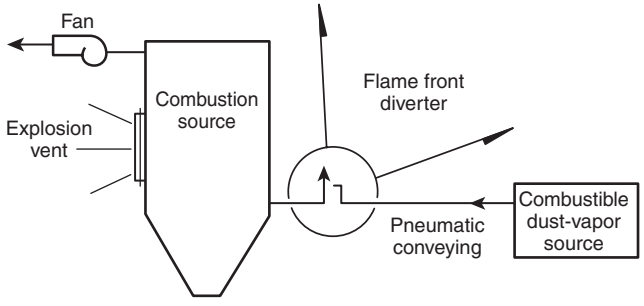

FIGURE A.12.2.1 Typical Application of Flame Front Diverters.

A.12.2.1.1 Figure A.12.2.1.1(a) through Figure A.12.2.1.1(c) provide examples of the three different types of flame front diverters addressed in this document.

A.12.2.1.4.1 The turbulence generated in the flame front diverter makes it difficult to predict the required design pressure. Therefore, testing is the only practical approach to ensure an adequate design. As a result, uncertified diverters could present a shrapnel hazard.

A.12.2.2 The valve is set to close at a rated pressure differential that results from the deflagration. Therefore, the deflagration must develop a minimum strength pressure wave in the upstream piping. The float valve engages a valve seat upon closing and is held in place by a retaining device. The float valve remains closed until manually reset. The float valve typically functions in both directions.

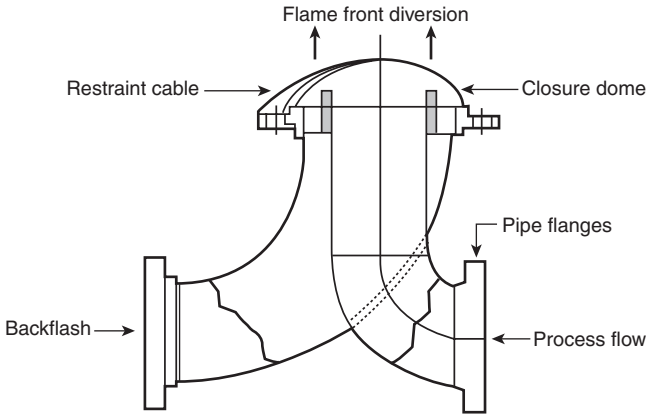

FIGURE A.12.2.1.1(a) Rupture Disc Diverter.

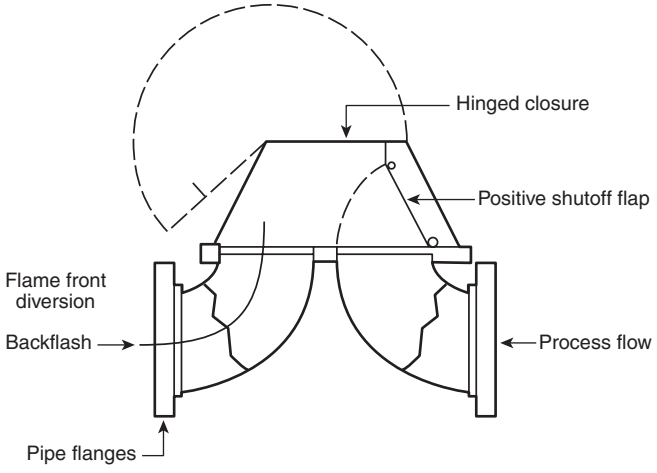

FIGURE A.12.2.1.1(b) Explosion Door Diverter.



FIGURE A.12.2.1.1(c) Self-Closing Explosion Door Diverter.

Copyright 2014 National Fire Protection Association (NFPA). Licensed, by agreement, for individual use and download on October 4, 2014 to LEADER and READER for designated user PATTARAPORN SRITRAKOOL. No other reproduction or transmission in any form permitted without written permission of NFPA. For inquires or to report unauthorized use, contact licensing@nfpa.org.

A potential problem with this valve is that an elastomeric seat, if used, could be adversely affected in high temperature environments. Another possible problem is that powder coating on the seal surfaces can prevent a tight seal, and flame breakthrough is then possible.

Since a certain minimum pressure differential is required to close the float valve, the propagation of an explosion through a pipe will not be stopped if its pressure is lower than the minimum actuation pressure of the float valve.

The placement of flow-actuated float valves requires a determination of the minimum and maximum distances from the origin of the explosion. Placement at the minimum distance ensures that the float valve closes before flame arrival. Placement at the maximum distance ensures that detonation does not develop in the vicinity of the float valve, and that the pressure does not exceed the design pressure of the float valve. These distances are usually recommended by the valve vendor and are affected by the explosibility of the fuel, the pipe diameter, and the expected minimum and maximum P_{red} in the upstream enclosure.

Table A.12.2.2 shows typical installation distances of a flow-actuated float valve, measured at the centerline.

Table A.12.2.2 Typical Installation Distances

Fuel Characteristics	Minimum Distance		Maximum Distance	
	m	ft	m	ft
Dust ($K \leq 300$ bar/m · sec^{-1})	3	9.8	12	39
Hybrid ($K \leq 400$ bar/m · sec^{-1})	3	9.8	5	16
Gas ($K \leq 100$ bar/m · sec^{-1})	3	9.8	8	26

A.12.2.2.1 A schematic drawing of a typical flow-actuated passive float valve and its internals is shown in Figure A.12.2.2.1.

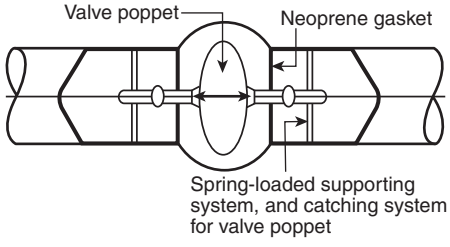

FIGURE A.12.2.2.1 Flow-Actuated Float Valve.

A.12.2.2.4 The most challenging situation for a float valve is at the fuel-lean and fuel-rich conditions. This is due to the need for the closing forces to be generated by the deflagration itself.

A.12.2.3.4.6 The minimum design pressure for the ductwork is typically $2 \times P_{red}$ because the pressure wave reflects off the closed valve. Depending on the distance between the flap valve and the enclosure, pressure piling could further increase the expected peak pressure.

A.12.2.4 The mass of bulk solids or powders contained in rotary valves provides a tortuous path through which the gas and flame have to pass and so acts as a "material choke" when certain design features are implemented. In previous editions of this standard, screw conveyors were included as material chokes; however, industry experience shows that these devices are not reliable as isolation devices.

A.12.2.4.1 Figure A.12.2.4.1 shows a typical rotary valve.

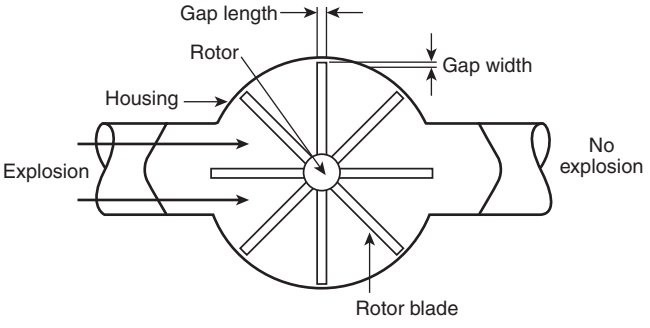

FIGURE A.12.2.4.1 Typical Rotary Valve.

If an explosion occurs, the rotary valve has to be automatically stopped to avoid transport of glowing or burning material to downstream equipment, where it could cause a secondary fire or act as an ignition source to ignite a dust cloud and cause a deflagration (Bartknecht 1989).

It is important that the hopper or vessel located upstream of the valve have a minimum inventory of solids to prevent flames passing through the solids due to the pressure wave from an explosion in the hopper or vessel. To maintain this minimum height of solids in the hopper upstream of the rotary valve, low level sensors are provided, which are interlocked to shut down the rotary valve before the hopper goes empty, thereby maintaining a level of solids above the rotary valve. This level of solids effectively acts as a seal to prevent flame and pressure transfer through the valve. A manual bypass should be provided for the low level sensor or interlock to allow emptying of the hopper when necessary.

The rotary valve can still significantly mitigate explosion propagation, even if total isolation is not achieved, by significantly reducing transmission of pressure. Siwek (1989) presents more information on the use of rotary valves for preventing explosion propagation.

A.12.2.4.3 Faulty bearings or the presence of tramp metal can cause frictional heating, resulting in temperatures in excess of the autoignition temperature of the powder (cloud or layer). Prevention of ignition sources can be accomplished in a number of ways, including the following:

(1) Providing a temperature switch on the bearings interlocked to stop the valve
(2) Installing metal exclusion devices upstream of the valve (magnetic diverters, screens)
(3) Operating the rotary valve at a low speed [tip speeds of 1 m/sec (200 fpm) or less]

A.12.2.4.4 The rotary valve with material blocking should be used with the understanding that its limitations have not been delineated to the same extent as other valves.

Copyright 2014 National Fire Protection Association (NFPA). Licensed, by agreement, for individual use and download on October 4, 2014 to LEADER and READER for designated user PATTARAPORN SRITRAKOOL. No other reproduction or transmission in any form permitted without written permission of NFPA. For inquires or to report unauthorized use, contact licensing@nfpa.org.

The material blocking method is more appropriate for deflagrations originating on the top side of the rotary valve. Where there is potential for deflagrations originating on the bottom side of a rotary valve using the material blocking method, the owner or operator should take into account the potential for material displacement and possible transmission of the deflagration.

A.12.2.4.5 Testing has shown that rotary valves can be effective in isolating explosion propagation if the following conditions are in place:

(1) There are three vanes on each side of the valve that are diametrically opposed.
(2) A close tolerance is maintained between the vanes and the valve body, that is, the gap between the rotor and housing is =0.2 mm (=0.0079 in.). For metal dusts, such as aluminum, the required gap between the tip of the rotor blades and the housing may be much smaller. Rotary air locks in metal dust service should be type tested for the intended use and application or used with a material block as described in 12.2.4.4.
(3) Two vanes per side are always in contact with the housing.
(4) The vanes or tips are made out of metal (no plastic vanes) and have a thickness of at least 3 mm (0.12 in.).

It is critical that this initial clearance be maintained in order for the explosion protection to function. Normal wear can cause these valves to become ineffective, allowing flame passage, and so preventive maintenance is necessary.

A.12.2.5 Flame arresters are specifically built for a variety of flame loads (deflagration, detonation, stabilized burning) and for substances of different reactivity (explosion groups), and they use different operating principles (quenching in gaps, gaseous counterflow, liquid seals).

A.12.2.5.2 Examples of flame arrester groups are shown in Figure A.12.2.5.2(a) through Figure A.12.2.5.2(c).

A.12.2.5.4 Flame arresters are frequently misapplied isolation devices, because of the lack of understanding of the test methods, limitations, and the number of types of flame arresting devices and applications. This material is intended to aid the user in identifying the process conditions that influence the choice of the appropriate flame arresting device. *[See Figure A.12.2.5.4(a) and Figure A.12.2.5.4(b).]*

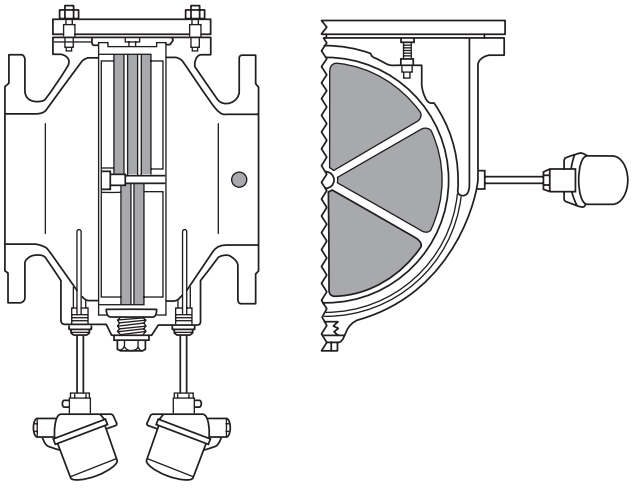

FIGURE A.12.2.5.2(a) In-Line Deflagration Arrester.

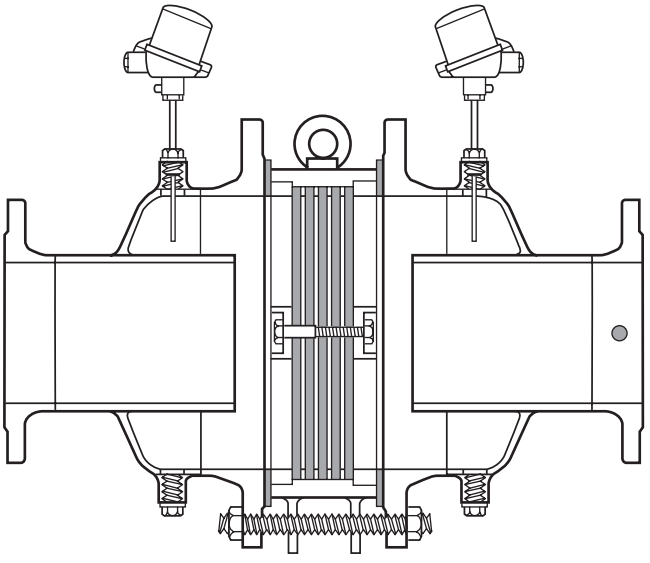

FIGURE A.12.2.5.2(b) In-Line Stable Detonation Arrester.

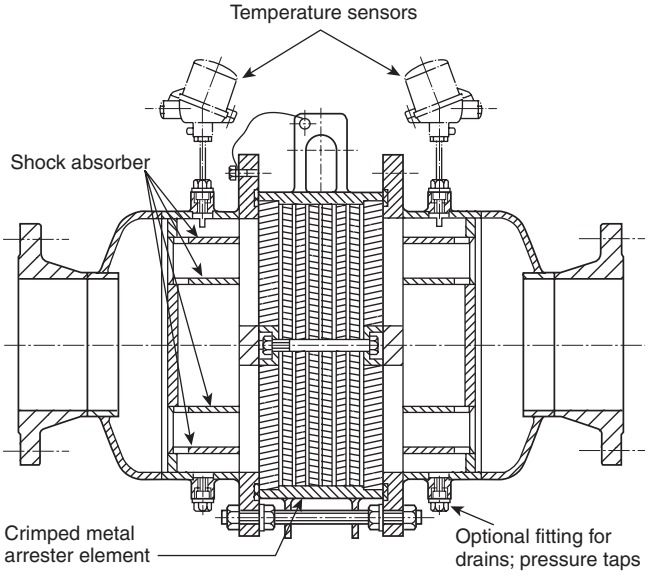

FIGURE A.12.2.5.2(c) In-Line Unstable Detonation Arrester.

A.12.2.5.4.5.2 The response time for shutoff must be limited, because simple shutoff also means that the filter elements are no longer cooled by convective heat transfer from flowing process vapors.

A.12.2.5.4.15 For explanation of what these forces might be, see Grossel, Section 6.5.

Copyright 2014 National Fire Protection Association (NFPA). Licensed, by agreement, for individual use and download on October 4, 2014 to LEADER and READER for designated user PATTARAPORN SRITRAKOOL. No other reproduction or transmission in any form permitted without written permission of NFPA. For inquires or to report unauthorized use, contact licensing@nfpa.org.

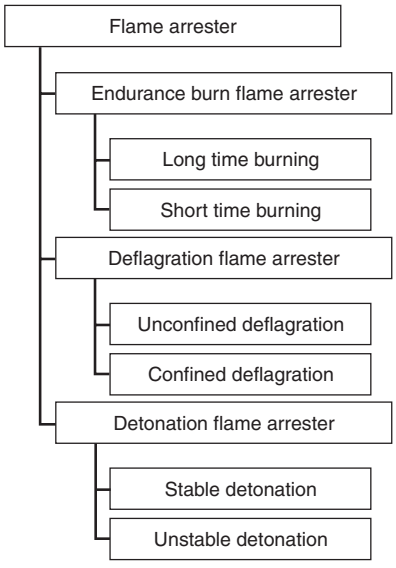

FIGURE A.12.2.5.4(a) Differentiating the Combustion Process.

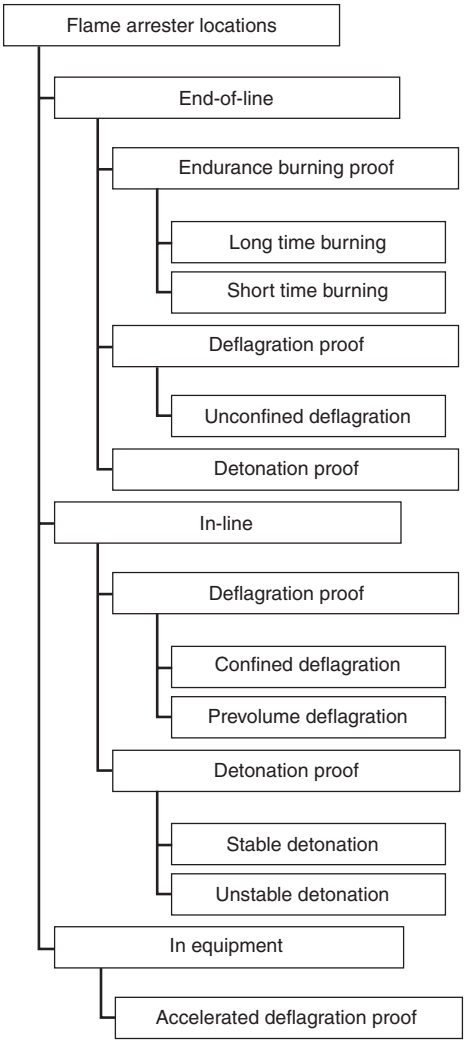

FIGURE A.12.2.5.4(b) Classification of Flame Arrester.

A.12.2.6 When an explosive mixture flows through a hydraulic arrester, it is separated into single isolated gas bubbles that rise due to buoyancy. Because of the formation of isolated bubbles, continuous channels for the passage of the igniting flame do not exist. If an ignition occurs on the side of the device where the single bubbles reach the surface of the liquid, flame propagation can be blocked. This is the usual direction when hydraulic arresters are applied. In the opposite case, that is, if ignition occurs at the upstream side, separation into single gas bubbles will still take place, but the efficiency of the protection will be low, since the combustion process can be transferred to the surface of the liquid. Whereas the action of a hydraulic arrester — the isolation of single gas volume elements— is clear, the mechanisms that enforce flame transmission under certain boundary conditions are considerably more difficult to understand. Up to now they have not been clarified in every detail. With the aid of extensive experiments Börger et al. determined the limits for the safe operation of hydraulic arresters in practice. Essential parameters here are the gas load (volume flow rate of gas per unit surface area of the liquid) and the depth of submersion (length of the bubble path). It was established that for a given reactivity of the mixture and a given depth, flame transmission always occurred beyond a critical volume flow rate per unit liquid surface area. This critical volume flow rate increases with increasing submersion depth of the device and decreasing reactivity of the explosible mixture. The mechanism of combustion propagation was investigated more thoroughly by Opholl. According to these investigations it seems to be important that the exploding single bubbles perform a sequence of damped vibrations, which lead on the formation of a gas jet, which can impinge on neighboring bubbles. This jet drags hot gases along and thus produces connections between the bubbles. The range of this effect increases with increasing reactivity of the gas. On the basis of the available investigations it cannot be excluded that direct ignition is also caused by the compression of neighboring bubbles.

There are some generic designs in common practice. Detailed design information is not available, and testing is recommended.

A.12.2.6.1 Typical hydraulic deflagration arrester designs are shown in Figure A.12.2.6.1(a) and Figure A.12.2.6.1(b).

A.12.2.6.3.10 For explanation of what these forces might be, see Grossel, Section 6.5.

A.12.2.6.3.27 It has to be ensured that enough liquid remains in the liquid seal so that the third explosion impact is prevented from transmission to the protected side.

A.12.2.7 Where flammable liquid transfer lines interconnect vessels, an empty line can present a path for flame propagation between the vessels, similar to manifolded vapor connections. With manifolded filling or emptying lines, often the main line remains liquid full, providing a seal against flame propagation. However, the location of this liquid seal could be some distance from the vessel, allowing a deflagration in a vessel to transition to detonation with increased damage potential. Liquid product detonation arresters can be located so as to limit affected piping.

In situations where the suction for a flammable liquid transfer pump is located below the pump, lowering liquid level in the suction vessel can result in vapors entering the pump, with a subsequent potential ignition. Often low level interlocks are provided to stop pumping before loss of sufficient level. A liquid product detonation arrester can be used to isolate a pump ignition source from the vessel.

Copyright 2014 National Fire Protection Association (NFPA). Licensed, by agreement, for individual use and download on October 4, 2014 to LEADER and READER for designated user PATTARAPORN SRITRAKOOL. No other reproduction or transmission in any form permitted without written permission of NFPA. For inquires or to report unauthorized use, contact licensing@nfpa.org.

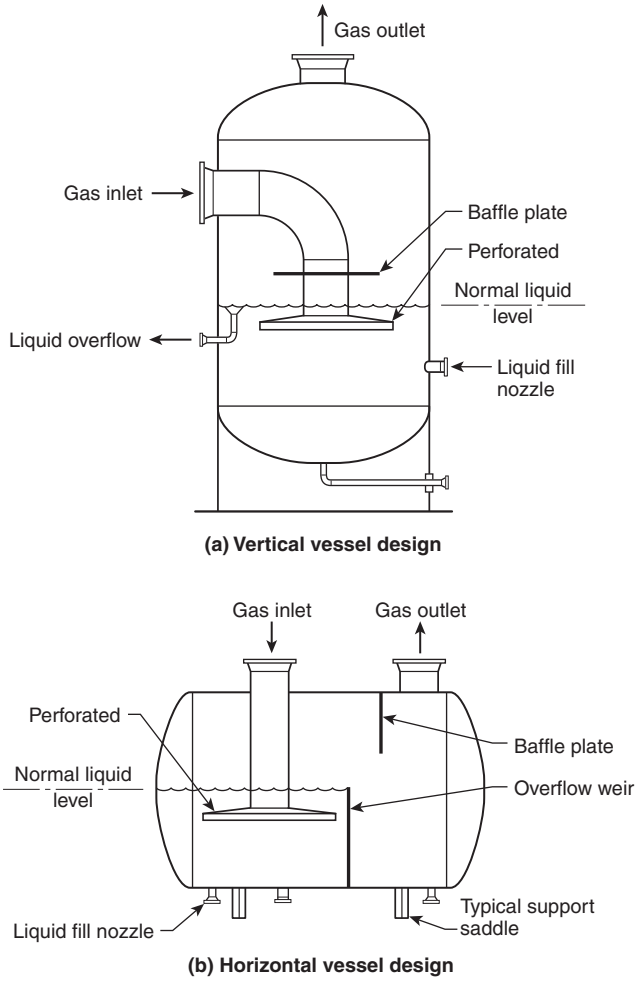

FIGURE A.12.2.6.1(a) Bubble Screen Hydraulic Flame Arrester.

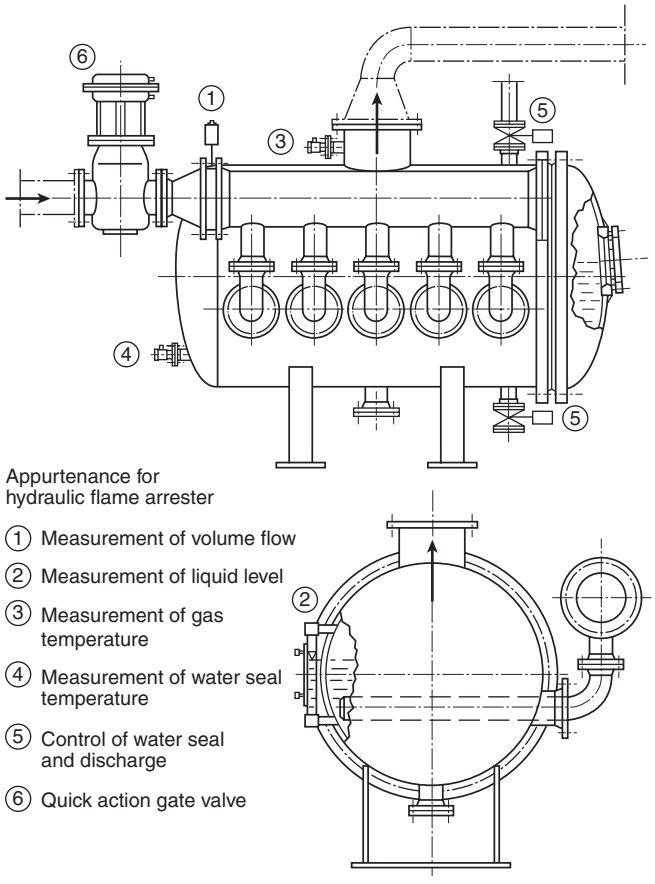

FIGURE A.12.2.6.1(b) Sparge Tube Hydraulic Arrester.

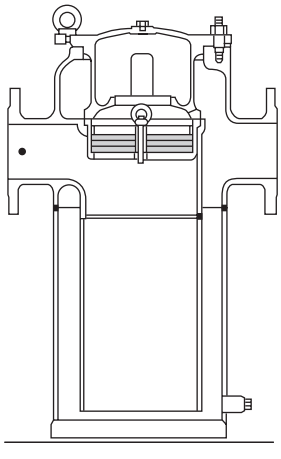

FIGURE A.12.2.7.1(a) Liquid Product Detonation Arrester with Siphon Bypass (Emptying and Filling Lines).

A.12.2.7.1 Liquid product detonation flame arresters are installed within piping, which is filled with liquid (e.g., gasoline) during normal operation, or installed inside storage tanks. Typically they are applied to filling and emptying lines of interconnected storage tanks where there is a risk of the pipe line running empty and the liquid being replaced with potentially combustible product–air mixture. If ignited, a deflagration or detonation may develop, which can be stopped with this type of device. *[See Figure A.12.2.7.1(a) through Figure A.12.2.7.1(c).]*

A.12.2.7.1(1) Figure A.12.2.7.1(a) shows a liquid product arrester that can be applied to filling and emptying lines because it includes a siphon bypass to avoid liquid being sucked out of the detonation arrester.

A.12.2.7.1(2) Figure A.12.2.7.1(b) shows a liquid product arrester that can only be applied to the filling line of a tank or vessel. Liquid can be pumped in only one direction through this device, because it does not have a bypass system installed.

A.12.2.7.1(3) Figure A.12.2.7.1(c) shows a liquid product arrester with a foot valve, which is applied to suction lines. This device will also function if the valve pallet is in an open position due to the minimum height of liquid level in the suction basket. These valves are installed inside the tank above the tank bottom. In addition to stopping flame propagation, foot valves provide protection against backflow and maintain a suction seal for pump startup.

A.13.1.5 Pressure piling and flame-jet ignition can significantly increase deflagration pressures in attached equipment. Techniques such as isolation or venting should be considered.

Copyright 2014 National Fire Protection Association (NFPA). Licensed, by agreement, for individual use and download on October 4, 2014 to LEADER and READER for designated user PATTARAPORN SRITRAKOOL. No other reproduction or transmission in any form permitted without written permission of NFPA. For inquires or to report unauthorized use, contact licensing@nfpa.org.

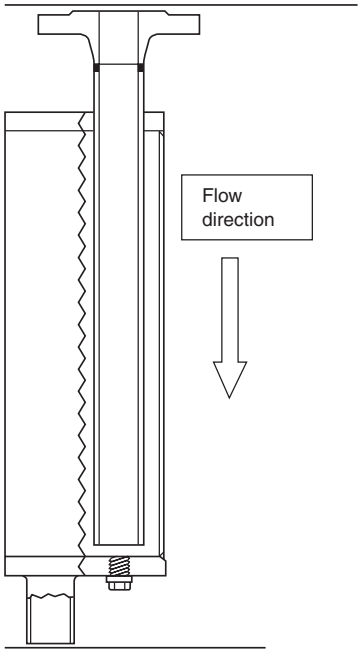

FIGURE A.12.2.7.1(b) Liquid Product Detonation Arrester Without Siphon Bypass (Filling Line Only).

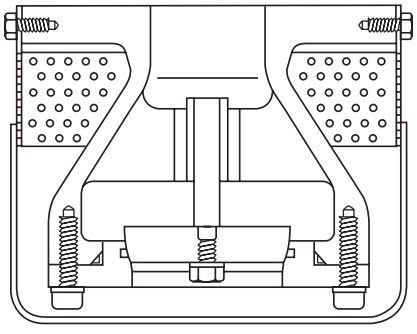

FIGURE A.12.2.7.1(c) Liquid Product Detonation Arrester with Foot Valve (Emptying Lines Only).

A.13.2.1 Deflagration pressure containment is not adequate for detonable systems because the maximum pressure rise is much greater than the factors established in 13.3.4.1 through 13.3.4.4. It should be recognized that some systems might be capable of deflagration or detonation. For example, systems containing a substantial proportion of hydrogen are prone to detonation, as are systems containing acetylene or acetylenic compounds. Saturated organic compounds such as propane, ethane, and alcohols generally do not detonate in vessels but might do so in pipework. Internals in equipment can promote the transition from deflagration to detonation.

A.13.2.2 When two vessels connected by a large-diameter pipe both contain a combustible mixture, a deflagration in one vessel can precompress the unburned mixture in the other vessel. The maximum deflagration pressure that can be developed in the second vessel might be substantially greater than would normally happen in a single vessel. *(See Bartknecht.)* Guidance on explosion containment in linked vessels is given in Barton.

A.13.2.2(5) Only limited information is available for deflagration containment of systems with initial gauge pressures exceeding 2 bar (30 psi). Increased initial pressure might increase the potential for detonation. For this reason it is recommended that, for systems that might operate at an initial gauge pressure of 2 bar (30 psi) or higher, deflagration pressure containment should be used only where applicable test data are available. The testing should be carefully designed because the detonation potential of a system is affected by vessel dimensions.

A.13.3.4 When determining the P_{mawp} to contain the deflagration, the calculated minimum design value for P_{mawp} will be less than the actual peak pressure expected during the deflagration. Deflagration is a short-term pressure excursion, and this method is recognized in ASME *Boiler and Pressure Vessel Code*. The formulas are based on a paper by Noronha et al. See NFPA 68 for a more detailed description of the forces imposed during a deflagration.

A.13.3.4.1 The maximum deflagration pressures for several dusts can be found in Annex F of NFPA 68, *Standard on Explosion Protection by Deflagration Venting*.

A.13.3.6 The maximum initial pressure depends on the origin of the pressure. In some cases, the maximum initial pressure is determined by the setting of a relief device on the system. In such cases, the maximum initial pressure is the sum of the relief device set pressure and the relief device accumulation pressure. Overpressure due to boiling of the vessel contents (for example, from external fire exposure) might raise the concentration of fuel in the vapor phase above its upper flammable limit and does not constitute a deflagration hazard.

A.14.1 The expanded metal mesh and polymer foams described in this chapter are intended for protection against internal deflagrations and are not intended for boiling liquid expanding vapor explosion (BLEVE) protection of liquefied gas storage tanks nor for emergency relief venting of flammable liquid storage tanks.

A.14.2.4.1 These requirements are taken from the range of densities in Table 1 of MIL-B-87162A (USAF), Military Specification: Baffle Material, Explosion Suppression, Expanded Aluminum Mesh, for Aircraft Fuel Tanks.

A.14.2.4.2.3 Where the application range is based on the fundamental burning velocity of the protected mixture, the same test method should be used to compare the burning velocity of the subject mixture to that of near-stoichiometric propane–air. In the case of a metal mesh made by expanding slit foil and then fan-folding the expanded metal into batts, the surface area per unit expanded foam volume is equal to

$$2\left(\frac{w_s \cdot n \cdot l_s}{W \cdot H \cdot l_f}\right) = 2\left(\frac{w_s \cdot L_0}{W \cdot l_f \cdot H}\right) \quad \textbf{(A.14.2.4.2.3)}$$

where:

w_s = slit foil width
n = number of layers in a batt of height H
l_s = length of unexpanded slit foil required to produce an expanded length l_f between folds
W = expanded foil width
H = height
l_f = expanded length between folds
L_0 = unexpanded length of foil in a batt

(from Szego, A., Premji, K., and Appleyard, R., Evaluation of Explosafe Explosion Suppression System for Aircraft Fuel Tank Protection.)

A.14.2.4.3 In the case of metal mesh made from expanded slit foil, the pore size is approximately equal to the foil spacing between slits.

Copyright 2014 National Fire Protection Association (NFPA). Licensed, by agreement, for individual use and download on October 4, 2014 to LEADER and READER for designated user PATTARAPORN SRITRAKOOL. No other reproduction or transmission in any form permitted without written permission of NFPA. For inquires or to report unauthorized use, contact licensing@nfpa.org.

A.14.2.4.4 In the case of aluminum foil mesh, the alloy composition should be specified per Aluminum Association standards (for example, composition designations 3003 or 3010). In the case of chromate coatings, MIL-C-5541, Chemical Conversion Coatings on Aluminum and Aluminum Alloys, would be applicable.

A.14.2.5 This material is taken from the reference for required densities found in Table 1 of MIL-DTL-83054C, Detailed Specification Baffle and Inerting Material, Aircraft Fuel Tank.

A.14.2.5.1 The specifications for the minimum numbers of pores are for applications involving alkanes or flammable gases and vapors with fundamental burning velocities within 15 percent of the near-stoichiometric propane-air burning velocity.

A.14.2.5.5.2 The maximum resistivity value required in 14.2.5.5.2 has been achieved and surpassed using conductive reticulated polyurethane foams described in SAE AIR 4170A, Reticulated Polyurethane Foam Explosion Suppression Material for Fuel Systems and Dry Bays. This reference also describes the advantages of the conductive foam in eliminating electrostatic ignitions that the U.S. Air Force was experiencing in certain aircraft equipped with higher resistivity polymer foams. If electrostatic charge generation mechanisms, such as direct fuel impingement onto the foam, can be avoided, the conductive foams may not be necessary.

A.14.3.3 Figure A.14.3.3 shows a diagram of a test vessel with a void volume, V_c, and mesh- or foam-filled (arrester) volume, V_a.

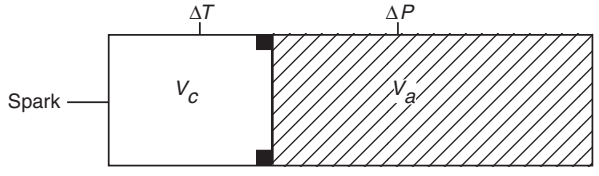

FIGURE A.14.3.3 Single Void Explosion Suppression Test Setup (MIL-PRF-877260A).

A.14.3.7 A diagram of the double void explosion suppression test setup is shown in Figure A.14.3.7. The ignition void fraction, $V_c / (V_c + V_a + V_v)$, is typically 0.20.

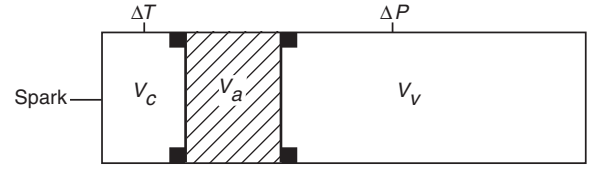

FIGURE A.14.3.7 Double Void Explosion Suppression Test Setup (MIL-F-877260).

A.14.4.1 For example, the value of P_{red} shown in SAE AIR4170 Rev A for fine pore blue polyether foam at an initial pressure of 3 psia (21 kPa) is about 11 psia (76 kPa) for propane–air explosion testing with a 20 percent single void volume. This foam can be installed only in enclosures with either an ultimate strength or yield pressure of at least 17 psia (117 kPa).

A.14.4.2 The number of mesh or foam blocks used during installation should be minimized. Voids between mesh or foam blocks should not be co-linear in order to avoid the potential for direct line flame propagation between multiple blocks. Compression of the mesh or foam during installation should also be minimized.

Installation guidelines for mesh or foam in aircraft fuel tanks and dry bays are given in SAE AIR4170 Rev. A, "Reticulated Polyurethane Foam Explosion Suppression Material for Fuel Systems and Dry Bays."

A.15.4.1 Suppressant storage containers, automatic fast-acting valves, flame front diverters, or flame arresters should be supported by other than the protected process, ductwork, or piping as determined by engineering review. Reinforcing pads, external mounts, or other means to redistribute the reaction forces of the explosion prevention device should be implemented. It is not intended or expected that the protection equipment be supported by the process equipment. External support may be required in order for the explosion prevention system to operate properly. Detection devices should be mounted such that product impingement will be minimized. Suppressant containers should be located such that discharge is not directed toward process openings where employees may be present.

A.15.5.5.1 Safety instrumented system (SIS) design focuses increasingly on the concept of safety integrity level (SIL). A process that is to be protected is assigned an SIL level based upon risk analysis. An SIL level of between 1 and 3 is assigned (between 1 and 4 under IEC 61511, *Functional Safety — Safety Instrumented Systems for the Process Industry Sector*), with 1 being the lowest level. Layers of protection are typically combined to achieve the SIL requirement for a process with individual safety systems often having a lower level than the process. This edition of NFPA 69 does not require the use of SIL levels for explosion prevention systems but recognizes their use. The guidelines for isolating a Safety Instrumented System from the basic process control system are included in ANSI/ISA-84.00.01, *Functional Safety: Safety Instrumented Systems for the Process Industry Sector,* current edition. IEC 61511 is also appropriate.

A.15.5.5.2 Initiating device circuits, notification appliance circuits, and signaling line circuits shall be permitted to be designated as either Class A or Class B, depending on their performance during non-simultaneous single circuit fault conditions as specified by the following conditions:

(1) Initiating device circuits and signaling line circuits that transmit an alarm or supervisor signal, or notification appliance circuits that allow all connected devices to operate during a single open or a non-simultaneous single ground fault on any circuit conductor, should be designated as Class A.
(2) Initiating device circuits and signaling line circuits that do not transmit an alarm or supervisory signal, or notification appliance circuits that do not allow connected devices to operate beyond the location of a single open or a non-simultaneous single ground fault on any circuit conductor, should be designated as Class B.

A.15.7.1.3 The frequency depends on the environmental and service conditions to which the devices are to be exposed. Process or occupancy changes that can introduce significant changes in condition, such as changes in the severity of corrosive conditions or increases in the accumulation of deposits or debris, can necessitate more frequent inspection. It is recommended that an inspection be conducted after a process maintenance turnaround. Inspections should also be conducted following any natural event that can adversely affect the operation (e.g., hurricanes or snow and ice accumulations).

A.15.7.2.1 Before starting maintenance, always make sure that any process environmental conditions such as gas–air mixtures or vapor–air mixtures are not dangerous to health.

A.15.7.3 See Figure A.15.7.3.

Copyright 2014 National Fire Protection Association (NFPA). Licensed, by agreement, for individual use and download on October 4, 2014 to LEADER and READER for designated user PATTARAPORN SRITRAKOOL. No other reproduction or transmission in any form permitted without written permission of NFPA. For inquires or to report unauthorized use, contact licensing@nfpa.org.

NFPA 69 EXPLOSION PREVENTION SYSTEMS QUARTERLY INSPECTION FORM

User Contact Information

Company name _____

Date inspected _____ Start time _____

Address _____

City _____ State _____ Zip code _____ Telephone _____

Inspector's name _____

Inspection company _____

Address _____

City _____ State _____ Zip code _____ Telephone _____

Explosion prevention system protecting _____

Explosion prevention system ID # _____

Explosion prevention system location _____

Explosion prevention system manufacturer _____

Follow the manufacturer's recommendations and the following:

Is/has/does/are/the explosion prevention system:

(1) Process and processed material changed since last inspection? ❑ Yes ❑ No

(2) Explosion prevention system been properly installed in accordance with this document and manufacturer's instructions? ❑ Yes ❑ No

(3) System components corroded or mechanically damaged? ❑ Yes ❑ No

(4) User operation instructions provided near the control unit? ❑ Yes ❑ No

(5) System components clearly labeled as an explosion prevention device? ❑ Yes ❑ No

(6) System components protected from the process and acts of nature? ❑ Yes ❑ No

(7) System components painted or coated other than by the original equipment manufacturer? ❑ Yes ❑ No

(8) System components have buildup of deposits on the inside surfaces of discharge nozzles or detection surfaces? ❑ Yes ❑ No

(9) System components changed, altered, or tampered with? ❑ Yes ❑ No

(10) System component mounting condition, such as cracked welds or missing bolts? ❑ Yes ❑ No

(11) System discharged/actuated? ❑ Yes ❑ No

(12) System seals, tamper indicators, or discharge indicators if provided, in place and functioning? ❑ Yes ❑ No

(13) Control unit functions according to design requirements and all circuits properly supervised? ❑ Yes ❑ No

(14) The system control unit indicating any faults? ❑ Yes ❑ No

(15) System sensing devices calibrated and function according to design requirements? ❑ Yes ❑ No

(16) System suppressors and valve actuators pressurized to specifications? ❑ Yes ❑ No

(17) System interlocks verified for proper sequence and functioning? ❑ Yes ❑ No

(18) Plant fire notification verified? ❑ Yes ❑ No

(19) System sequence of operation verified? ❑ Yes ❑ No

(20) Components correctly located as the system drawings indicate? ❑ Yes ❑ No

(21) Components clear of obstructions and accessible? ❑ Yes ❑ No

(22) Clearly tagged or labeled with manufacturer's information? ❑ Yes ❑ No

(23) Showing process material buildup or deposits? ❑ Yes ❑ No

(24) Fasteners and mounting hardware in place? ❑ Yes ❑ No

© 2013 National Fire Protection Association NFPA 69 (p. 1 of 4)

FIGURE A.15.7.3 Explosion Prevention Systems Quarterly Inspection Form.

Copyright 2014 National Fire Protection Association (NFPA). Licensed, by agreement, for individual use and download on October 4, 2014 to LEADER and READER for designated user PATTARAPORN SRITRAKOOL. No other reproduction or transmission in any form permitted without written permission of NFPA. For inquires or to report unauthorized use, contact licensing@nfpa.org.

SENSORS
REPORT NO. _____

Note: Visual inspection includes check for dents, abrasion, corrosion, leaks, and obstruction

System Armed/Disarmed After Service

Log No.	Location	Temp. °F	System Set Pressure Setting	In. Water Column	Visual	Mounting	Adaptors	Seals	Wiring	Pathway	Obscuration of Sensing Lens	Remarks

© 2013 National Fire Protection Association NFPA 69 (p. 2 of 4)

FIGURE A.15.7.3 *Continued*

Copyright 2014 National Fire Protection Association (NFPA). Licensed, by agreement, for individual use and download on October 4, 2014 to LEADER and READER for designated user PATTARAPORN SRITRAKOOL. No other reproduction or transmission in any form permitted without written permission of NFPA. For inquires or to report unauthorized use, contact licensing@nfpa.org.

SUPPRESSORS AND AUTOMATIC FAST-ACTING VALVE REPORT NO. _____

Note: Visual inspection includes check for dents, abrasion, corrosion, leaks, and obstruction

Catalog No.	Location	Temp. °F	System Set Pressure	Weight (lb)	Visual	Mounting	Adaptors	Seals	Wiring	Actuating Device	Remarks

© 2013 National Fire Protection Association NFPA 69 (p. 3 of 4)

FIGURE A.15.7.3 *Continued*

Copyright 2014 National Fire Protection Association (NFPA). Licensed, by agreement, for individual use and download on October 4, 2014 to LEADER and READER for designated user PATTARAPORN SRITRAKOOL. No other reproduction or transmission in any form permitted without written permission of NFPA. For inquires or to report unauthorized use, contact licensing@nfpa.org.

Field Wiring

Log No.	Measured Parameter (Resistance, Current, Other)	Manufacturer Standard Value

Auxiliary Equipment

Log No.	Location	Mechanical Condition	Mounting	Wiring	Controls & Switches	Remarks

System Armed/Disarmed After Service

Authorized Signature _____ Signed: _____

Customer _____ Engineer _____

ACTION REQUIRED BY MANAGEMENT

Process engineer/supervisor notified? ❑ Yes ❑ No

Date addressed _____

Action required ❑ Yes ❑ No

Signature _____

Have you observed changes to the process and or its surroundings that should invoke the company's management of change procedure? ❑ Yes ❑ No

Inspector's signature _____

Manager's signature _____

Date: _____ Stop time: _____

System re-armed: _____

© 2013 National Fire Protection Association NFPA 69 (p. 4 of 4)

FIGURE A.15.7.3 ***Continued***

Copyright 2014 National Fire Protection Association (NFPA). Licensed, by agreement, for individual use and download on October 4, 2014 to LEADER and READER for designated user PATTARAPORN SRITRAKOOL. No other reproduction or transmission in any form permitted without written permission of NFPA. For inquires or to report unauthorized use, contact licensing@nfpa.org.

A.15.8.1 Corrective process and protection system actions by the owner or operator, and refurbishment of the explosion prevention system, should be completed by personnel authorized by the manufacturer. Corrective actions should be implemented before the process is returned to service.

A.15.8.2 The causes of explosion prevention system actuations are often difficult to determine. The cause may be traced to a deflagration or may have resulted from an inadvertent effect. Assistance of factory-trained personnel from the explosion prevention system manufacturer is recommended. The investigation may include duplicating process pressure conditions and the effects of process changes such as fan speeds, valve actions, etc. Particular attention should be paid to any service or maintenance work or programming changes on the process control software. Best practice for such an investigation and review might include any or all of the following elements:

(1) Recording all process operating data at the time of the actuation and noting if any process upsets had recently occurred
(2) Recording the status of the explosion prevention control systems
(3) Recording the status and condition of the process safety interlocks
(4) Capturing history data from the explosion prevention control system if available
(5) Recording statements and observations from personnel in the area of the event
(6) Photographing the area in and around the event location and collecting samples of the material in process at the time of actuation for analysis if the actuation cause cannot be determined
(7) Recording weather conditions at the time of actuation
(8) Posting discharge communication with management and the explosion prevention system supplier or maintainer, to coordinate refurbishment and inspection of the explosion prevention system

A.15.11.3 It is recommended that changes be reviewed with life safety system and equipment suppliers.

Annex B Control of Flammable Gas Mixtures by Oxidant Concentration Reduction and Combustible Concentration Reduction

This annex is not a part of the requirements of this NFPA document but is included for informational purposes only.

B.1 General. As covered in Chapters 7 and 8, a flammable gas–oxidant mixture might be controlled by reducing the concentration of oxidant or by adding an inert constituent to the mixture. Both processes can be explained most easily by referring to a flammability diagram. Figure B.1 shows a typical flammability diagram that represents a mixture of a combustible gas; an inert gas, nitrogen; and an oxidant, oxygen, at a given temperature and pressure.

A mixture of air (79 percent N_2 and 21 percent O_2, by volume) and combustible gas is represented by the line formed by points *DABE*. A given mixture of the combustible gas and air, whether ignitible or not, is specified by a point on this line. Point *A* indicates the upper flammable limit of this mixture, and point *B* represents its lower flammable limit.

Any point within the area bounded by *FBCAGF* is in the flammable range and can be ignited. Any point outside this area represents a mixture that cannot be ignited. Point *C* represents the limiting oxidant concentration to prevent ignition; any mixture containing less oxygen cannot be ignited. *(See Annex* C.*)*

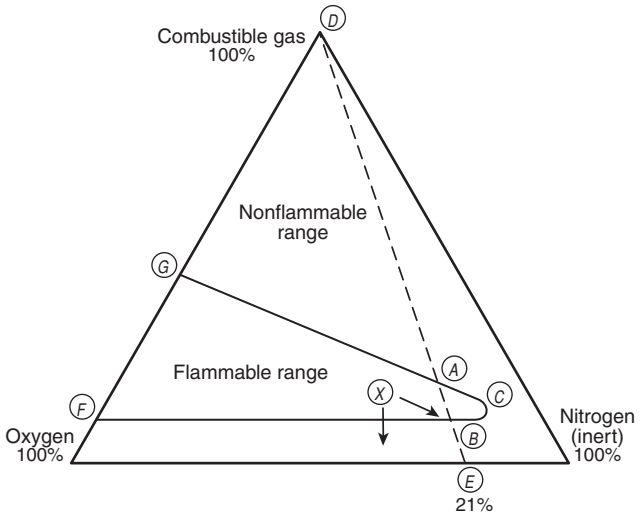

FIGURE B.1 Typical Flammability Diagram.

Any mixture of oxygen and combustible gas alone (i.e., without nitrogen) is represented by the left side of the triangle. Any mixture of nitrogen and combustible gas alone (i.e., without oxygen) is represented by the right side of the triangle.

B.2 Effect of Pressure and Temperature. As shown in Figure B.2, pressure and temperature can have an effect on the flammability diagram. An increase in pressure results in an increase in the upper flammable limit and a decrease in the limiting oxidant concentration points *C*, *C'*, and *C"*, to prevent ignition. There is a slight decrease on the lower flammable limit, but the effect is not as pronounced as that of the upper limit.

An increase in temperature has a similar effect on the flammability diagram.

The exact effects on a system produced by changes in pressure or temperature should be determined for each system.

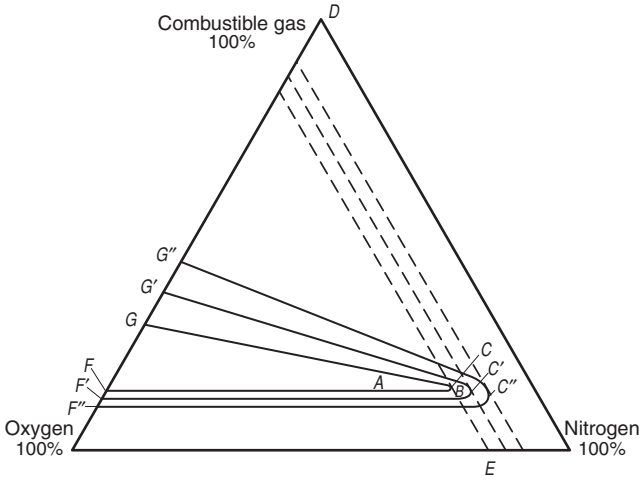

FIGURE B.2 Effect of Pressure on Flammability Diagram.

Copyright 2014 National Fire Protection Association (NFPA). Licensed, by agreement, for individual use and download on October 4, 2014 to LEADER and READER for designated user PATTARAPORN SRITRAKOOL. No other reproduction or transmission in any form permitted without written permission of NFPA. For inquires or to report unauthorized use, contact licensing@nfpa.org.

B.3 Effect of Inert Diluents. The addition of an inert diluent to a mixture of combustible material and oxidant affects the lower and upper flammable limits and the limiting oxidant concentration. Figure B.3 illustrates the effect of some typical diluents on the flammability limits of methane. Figure B.3 shows that nitrogen is more effective than helium and that carbon dioxide is more effective than nitrogen.

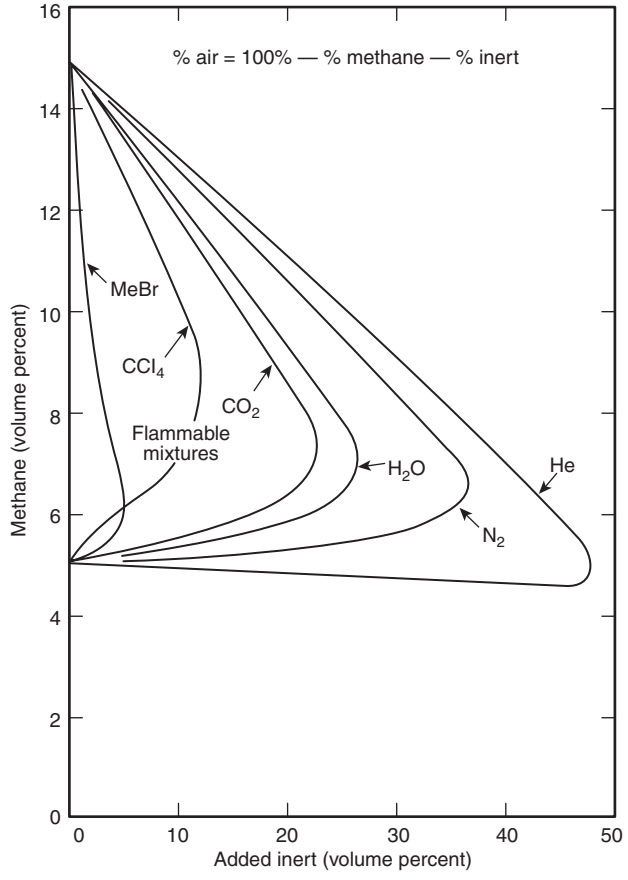

FIGURE B.3 Limits of Flammability of Methane–Inert Gas–Air Mixtures at 25°C (77°F) and Atmospheric Pressure. (Source: J. F. Coward and G. W. Jones, "Limits of Flammability of Gases and Vapors.")

B.4 Oxidant Concentration Reduction. In Figure B.1, point *X* represents an arbitrary mixture of flammable gas, oxygen, and nitrogen that lies well within the flammable range. If the composition of the mixture is to be changed so that it lies outside the flammable range, one method that can be used is to reduce the concentration of oxidant. As the concentration of oxygen decreases, the concentration of nitrogen increases. Point *X*, in effect, moves toward the inert gas apex.

B.5 Combustible Concentration Reduction. In Figure B.1, with point *X* in the flammable range, the composition of the mixture might be altered by reducing the concentration of flammable gas. In simpler terms, point *X* moves away from the flammable gas apex and eventually drops below the lower flammability line *FBC*.

B.6 Mixtures of Gases. Where mixtures of two or more flammable gases are encountered, the limits of flammability of the mixture can often be reliably predicted by using the following formulas suggested by Le Chatelier:

$$\text{LFL} = \frac{P_1 + P_2 + \cdots + P_n}{\frac{P_1}{\text{LFL}_1} + \frac{P_2}{\text{LFL}_2} + \cdots + \frac{P_n}{\text{LFL}_n}} \quad \textbf{(B.6a)}$$

$$\text{UFL} = \frac{P_1 + P_2 + \cdots + P_n}{\frac{P_1}{\text{UFL}_1} + \frac{P_2}{\text{UFL}_2} + \cdots + \frac{P_n}{\text{UFL}_n}} \quad \textbf{(B.6b)}$$

where:

LFL = lower flammable limit
$P_1 \ldots P_n$ = volume fractions of components 1, 2, 3, …, *n* of the mixture
$\text{LFL}_1 \ldots \text{LFL}_n$ = lower flammable limits of components 1, 2, 3, …, *n* of the mixture
UFL = upper flammable limit
$\text{UFL}_1 \ldots \text{UFL}_n$ = upper flammable limits of components 1, 2, 3, …, *n* of the mixture

B.7 Flammable Limits of Fuel/Diluent Mixtures. A number of estimation methods have been proposed for diluted mixtures with varying success. None of these methods should be considered appropriate for unstable materials or oxygen-enriched atmospheres. Where flammable limits of the fuel components are known by test, the thermal balance method of Ma (2011) first derives a heating factor, H_F, and a quenching factor, Q_F, from the flammable limits for each component and then uses a molar average of these two factors to estimate the flammable limits of the mixture. For fuel-only mixtures, this method is equivalent to Le Chatelier's method and has the same limitations with respect to mixtures having widely varying adiabatic flame temperatures (ADTs). Diluents are treated as fuels without a heating factor using a molar ratio, R, of diluent to fuel. The estimated flammable limits, X_L and X_U, apply to the diluted mixture.

B.7.1 Derivation of Heating and Quenching Factors for a Fuel Component. A thermal balance of heating and quenching potentials is established for a fuel component, according to the following two equations where the heating factor, H_F, is equal to the stoichiometric amount of oxygen consumed by combustion, C_O, multiplied by the heat of oxidation specific to the fuel, H_O. Q_F is the fuel quenching factor relative to air. The first equation is at the lower flammable limit where the amount of fuel controls the limit, and the second equation is at the upper flammable limit where the amount of oxygen controls the limit. In both equations the second term on the left-hand side is the quenching effect of heating the combustion air. The factor 4.773 is the inverse of 0.2095, the mole fraction of oxygen in air.

$$x_L Q_F + (1 - x_L) = x_L H_F = x_L C_O H_O \quad \textbf{(B.7.1a)}$$

$$x_U Q_F + (1 - x_U) = \frac{(1 - x_U)}{4.773} H_O \quad \textbf{(B.7.1b)}$$

A simultaneous solution of equations B.7.1a and B.7.1b, for fuel components with known LFL and UFL, results in heating factors and quenching factors, as in equations B.7.1c and B.7.1d.

$$H_O = \frac{x_U - x_L}{C_O x_U x_L - \frac{(1 - x_U) x_L}{4.773}} \quad \textbf{(B.7.1c)}$$

$$Q_F = 1 - \frac{1}{x_L} + C_O H_O \quad \textbf{(B.7.1d)}$$

Copyright 2014 National Fire Protection Association (NFPA). Licensed, by agreement, for individual use and download on October 4, 2014 to LEADER and READER for designated user PATTARAPORN SRITRAKOOL. No other reproduction or transmission in any form permitted without written permission of NFPA. For inquires or to report unauthorized use, contact licensing@nfpa.org.

B.7.2 Derivation of LFL and UFL for a Fuel-Only Mixture. For fuel-only mixtures, the component concentrations are identified as $z_{F,i}$. More typically these would be indicated as y_i, since the materials are in gas phase. Fuel mixture heating and quenching factors are determined as molar averages of the fuel components, as in equations B.7.2a through B.7.2d.

$$C_{O,mix} = \frac{\sum_i \left(z_{F,i} C_{O,i}\right)}{\sum_i z_{F,i}} \quad \textbf{(B.7.2a)}$$

$$H_{F,mix} = \frac{\sum_i \left(z_{F,i} H_{F,i}\right)}{\sum_i z_{F,i}} = \frac{\sum_i \left(z_{F,i} C_{O,i} H_{O,i}\right)}{\sum_i z_{F,i}} \quad \textbf{(B.7.2b)}$$

$$H_{O,mix} = \frac{H_{F,mix}}{C_{O,mix}} \quad \textbf{(B.7.2c)}$$

$$Q_{F,mix} = \frac{\sum_i \left(z_{F,i} Q_{F,i}\right)}{\sum_i z_{F,i}} \quad \textbf{(B.7.2d)}$$

For a fuel-only mix, the upper and lower flammability limits are as in equations B.7.2e and B.7.2f:

$$x_{L,\,fuel\,mix} = \frac{1}{1 + H_{F,mix} - Q_{F,mix}} \quad \textbf{(B.7.2e)}$$

$$x_{u,\,fuel\,mix} = \frac{\left(H_{o,mix}/4.773\right) - 1}{\left(H_{o,mix}/4.773 - 1 + Q_{F,mix}\right)} \quad \textbf{(B.7.2f)}$$

B.7.2.1 Example of the Estimation of a Fuel Mixture LFL and UFL. For a mixture of three fuel components, as in Table B.7.2.1, the flammable limits are estimated using both Le Chatelier's method as in B.6 and the thermal balance method of Ma. LFL and UFL data are from NFPA 497, *Recommended Practice for the Classification of Flammable Liquids, Gases, or Vapors and of Hazardous (Classified) Locations for Electrical Installations in Chemical Process Areas.* The calculations are shown following the table with more than appropriate significant digits to illustrate the minor differences.

For Le Chatelier's method:

$$LFL = \frac{0.635 + 0.208 + 0.157}{\frac{0.635}{2.0} + \frac{0.208}{3.3} + \frac{0.157}{1.1}} \quad \textbf{(B.7.2.1a)}$$

$$= 1.9111\ vol\%$$

$$UFL = \frac{0.635 + 0.208 + 0.157}{\frac{0.635}{11.5} + \frac{0.208}{19.0} + \frac{0.157}{7.1}} \quad \textbf{(B.7.2.1b)}$$

$$= 11.328\ vol\%$$

For Ma's method, illustrating the evaluation of H_o and Q_F for ethyl acetate:

$$H_o = \frac{0.115 - 0.020}{(5)(0.115)(0.020) - \frac{(1 - 0.115)(0.020)}{4.773}} \quad \textbf{(B.7.2.1c)}$$

$$= 12.1926$$

$$Q_F = 1 - \frac{1}{0.020} + (5)(12.1926) \quad \textbf{(B.7.2.1d)}$$

$$= 11.9628$$

For Ma's method, illustrating the evaluation of the mixture stoichiometric ratio, heating factor, heat of oxidation, and quenching factor:

$$C_{O,mix} = \frac{0.635(5) + 0.208(3) + 0.157(9)}{0.635 + 0.208 + 0.157} \quad \textbf{(B.7.2.1e)}$$

$$= 5.212$$

$$H_{F,mix} = \frac{0.635(60.9628) + 0.208(35.6555) + 0.157(110.4747)}{0.635 + 0.208 + 0.157} \quad \textbf{(B.7.2.1f)}$$

$$= 63.4722$$

$$H_{O,mix} = \frac{63.4722}{5.212} = 12.1781 \quad \textbf{(B.7.2.1g)}$$

$$Q_{F,mix} = \frac{0.635(11.9628) + 0.208(6.3525) + 0.157(20.5656)}{0.635 + 0.208 + 0.157} \quad \textbf{(B.7.2.1h)}$$

$$= 12.1465$$

Table B.7.2.1 Estimation of Flammable Limits of a Fuel Mixture

Fuel	$Z_{F,i}$	LFL vol%	UFL vol%	C_o	H_o	H_F	Q_F
Ethyl Acetate	0.635	2.0	11.5	5	12.1926	60.9628	11.9628
Ethanol	0.208	3.3	19.0	3	11.8852	35.6555	6.3525
Toluene	0.157	1.1	7.1	9	12.2750	110.4747	20.5656
Mixture Molar Averages				5.212	12.1781	63.4722	12.1465

Mixture Flammability Limits	Le Chatelier	Ma
LFL vol%	1.9111	1.9111
UFL vol%	11.328	11.326

Copyright 2014 National Fire Protection Association (NFPA). Licensed, by agreement, for individual use and download on October 4, 2014 to LEADER and READER for designated user PATTARAPORN SRITRAKOOL. No other reproduction or transmission in any form permitted without written permission of NFPA. For inquires or to report unauthorized use, contact licensing@nfpa.org.

Finally, for Ma's method:

$$x_{L,fuel\ mix} = \frac{1}{1+63.4722-12.1465} = 0.019111 = 1.9111\ vol\% \quad \textbf{(B.7.2.1i)}$$

$$x_{U,fuel\ mix} = \frac{(12.1781/4.773)-1}{(12.1781/4.773)-1+12.1465} = 0.11326 = 11.326\ vol\% \quad \textbf{(B.7.2.1j)}$$

B.7.3 Derivation of LFL and UFL for a Single Fuel–Single Diluent Mixture. For a single fuel and single diluent, the fuel is Z_F and the diluent is Z_D. At the lower limit, these are $Z_{F,L}$ and $Z_{D,L}$ and at the upper limit $Z_{F,U}$ and $Z_{D,U}$. The fuel-only thermal balance equations are modified as in equations B.7.3a and B.7.3b. The third term on the left-hand side is again the quenching effect of heating the combustion air.

$$z_{F,L}Q_F + z_{D,L}Q_D + (1 - z_{F,L} - z_{D,L}) = z_{F,L}H_F \quad \textbf{(B.7.3a)}$$

$$z_{F,U}Q_F + z_{D,U}Q_D + (1 - z_{F,U} - z_{D,U}) = \frac{(1 - z_{F,U} - z_{D,U})}{4.773}H_O \quad \textbf{(B.7.3b)}$$

The quenching factor for the diluent, Q_D, is the ratio of the enthalpy change for the diluent, divided by that for air, over the range from ambient to the AFT at the corresponding lower or upper flammable limit. The AFTs at the LFL and UFL are lower than that at the stoichiometric concentration. Depending on the chosen flame temperature, the quenching factor can vary. Table B.7.3 shows quenching factors for a number of common diluents as well as air and CCl_4. The factors are slightly different than those in Ma (2011) and were developed based on the enthalpy change associated with increasing the temperature from 298 K to the listed AFT, using a Peng-Robinson equation of state.

In the table, one gas (CO_2) is listed with a quenching factor somewhat larger than determined by the enthalpy ratio. Senecal (2005) determined in suppression tests that CO_2 was on the order of 9 percent more effective than anticipated, and the quenching potentials for CO_2 are modified to be 9 percent larger, thus 1.75 at AFT of 1600 K. For hydrocarbon fuel mixtures, assuming an AFT of 1600 K is appropriate.

Equations B.7.3a and B.7.3b are more readily solved if the mole fraction of diluent is replaced with a ratio, R, to the fuel and the sum of z_F and z_D is recognized to be the total concentration of the diluted fuel mixture at the flammable limits.

$$R = \frac{z_{D,L}}{z_{F,L}} = \frac{z_{D,U}}{z_{F,U}} \quad \textbf{(B.7.3c)}$$

$$z_{F,L} + z_{D,L} = x_L \ \ and \ \ z_{F,U} + z_{D,U} = x_U \quad \textbf{(B.7.3d)}$$

This leads to relations for z_F and z_D, shown below at the lower limit:

$$z_{F,L} = \frac{x_L}{1+R} \quad \textbf{(B.7.3e)}$$

$$z_{D,L} = \frac{Rx_L}{1+R} \quad \textbf{(B.7.3f)}$$

The fuel mole fractions are summed, as are the diluent mole fractions:

$$z_F = \sum_i z_{F,i} \quad \textbf{(B.7.3g)}$$

$$z_D = \sum_i z_{D,i} \quad \textbf{(B.7.3h)}$$

Where there is more than a single fuel component, the fuel-mixture properties are first evaluated based on molar averages, as in B.7.2. Similarly where there is more than a single diluent, the quenching factor for multiple diluents is first evaluated based on molar averages, as in Equation B.7.3i.

$$Q_{D,mix} = \frac{\sum_i (z_{D,i}Q_{D,i})}{\sum_i z_{D,i}} \quad \textbf{(B.7.3i)}$$

Substituting the above relations into equations B.7.3a and B.7.3b gives the diluted mixture LFL and UFL in equations B.7.3j and B.7.3k.

$$x_{L,diluted\ mix} = \frac{1}{1+\left(\frac{H_{F,mix}}{1+R}\right)-\left(\frac{Q_{F,mix}}{1+R}\right)-\left(\frac{RQ_{D,mix}}{1+R}\right)} \quad \textbf{(B.7.3j)}$$

$$x_{U,diluted\ mix} = \frac{(H_{O,mix}/4.773-1)}{\left(H_{O,mix}/4.773-1\right)+\left(\frac{Q_{F,mix}}{1+R}\right)+\left(\frac{RQ_{D,mix}}{1+R}\right)} \quad \textbf{(B.7.3k)}$$

This method does not predict the typical nose of a flammability curve, but instead models two straight lines intersecting at the stoichiometric oxidant concentration, as in Figure B.7.3 for methane with argon or CO_2 diluent. Ma (2011) provides options to refine the estimation of limits near the nose.

Evaluating the two limits separately can result in predicted UFL less than predicted LFL. When the predicted LFL and UFL are equal, this is the limit of the calculation, as seen in Figure B.7.3, and the mixture can conservatively be considered non-combustible.

Table B.7.3 Quenching Factors for Some Gaseous Diluents

AFT (K)	Air	He	Ar	N_2	O_2	CO_2	H_2O	CCl_4
1300	1.000	0.658	0.658	0.995	1.053	1.726	1.233	3.200
1600	1.000	0.643	0.643	0.996	1.052	1.751	1.259	3.166
1850	1.000	0.633	0.633	0.996	1.050	1.765	1.282	3.138

Copyright 2014 National Fire Protection Association (NFPA). Licensed, by agreement, for individual use and download on October 4, 2014 to LEADER and READER for designated user PATTARAPORN SRITRAKOOL. No other reproduction or transmission in any form permitted without written permission of NFPA. For inquires or to report unauthorized use, contact licensing@nfpa.org.

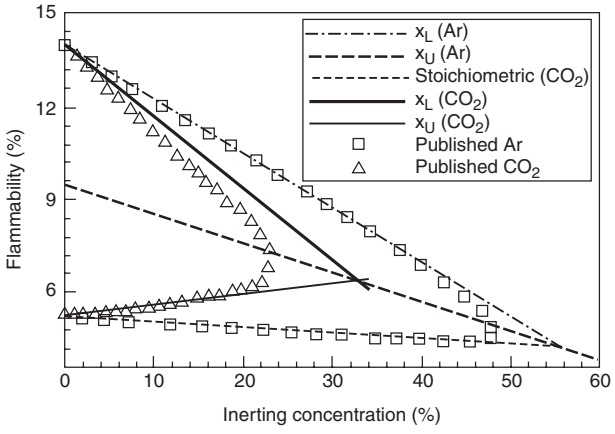

FIGURE B.7.3 Methane with Argon or CO_2 Diluent (Ma [2011], Figure 5[a]).

B.7.3.1 Example of the Estimation of a Diluted Methane Mixture LFL and UFL. For a mixture of methane with various single diluents, Table B.7.3.1 lists the diluent ratio and the concentration of methane and diluents at the mixture LFL and UFL. Only the pure fuel limits and the intersection of the LFL curve with the UFL curve are necessary to construct the straight-line diagram.

B.7.3.2 Comparison to Figure B.3. The methodology of Ma can be used to develop a comparison to the data of Coward and Jones (1952), shown in Figure B.3. With the above recommended quench factors, the method follows the trend of Figure B.3, as in Figure B.7.3.2, and is generally conservative with predicted LFL lower and UFL higher t han the data.

B.7.4 Other methods have been proposed by Kondo (2006) and Kondo (2008).

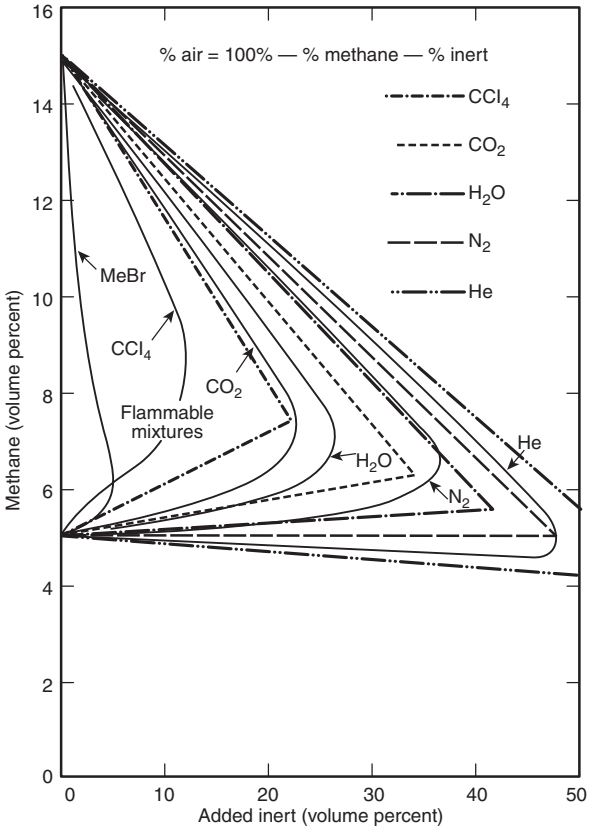

FIGURE B.7.3.2 Comparison of Predicted Flammability Limits to Data for Methane-Inert Gas-Air Mixtures.

Table B.7.3.1 Estimation of Flammable Limits of Methane Diluted with CO_2

	Pure Fuel	75% Fuel	50% Fuel	25% Fuel	Intersection
Total Fuel Molar Flow (or Fraction)	1	0.75	0.5	0.25	0.1563
Total Diluent Molar Flow (or Fraction)	0	0.25	0.5	0.75	0.8437
Total Stream Molar Flow (or Fraction)	1	1	1	1	1
Fuel-Only Mixture Parameters					
Mixture Stoichiometric Oxygen Ratio, $C_{o,\ mix}$	2	2	2	2	2
Mixture Heating Factor, $H_{f,\ mix}$	32.810	32.810	32.810	32.810	32.810
Mixture Heat of Oxidation, $H_{o,\ mix}$	16.405	16.405	16.405	16.405	16.405
Mixture Quenching Factor, $Q_{f,mix}$	13.810	13.810	13.810	13.810	13.810
Diluent Mixture Parameters					
Dilution Ratio = Molar Diluent/Molar Fuel	0	0.3333	1.0000	3.0000	5.3992
Diluent Mixture Quenching Factor, $Q_{D,mix}$	0	1.7510	1.7510	1.7510	1.7510
Diluted Mixture LFL	0.05	0.0675	0.1039	0.2254	0.4013
Fuel Mole Fraction at Diluted Mixture LFL	0.05	0.0506	0.0520	0.0563	0.0627
Diluent Mole Fraction at Diluted Mixture LFL	0	0.0169	0.0520	0.1690	0.3386
Diluted Mixture UFL	0.15	0.1842	0.2385	0.3383	0.4013
Fuel Mole Fraction at Diluted Mixture UFL	0.15	0.1381	0.1193	0.0846	0.0627
Diluent Mole Fraction at Diluted Mixture UFL	0	0.0460	0.1193	0.2538	0.3386

Copyright 2014 National Fire Protection Association (NFPA). Licensed, by agreement, for individual use and download on October 4, 2014 to LEADER and READER for designated user PATTARAPORN SRITRAKOOL. No other reproduction or transmission in any form permitted without written permission of NFPA. For inquires or to report unauthorized use, contact licensing@nfpa.org.

Annex C Limiting Oxidant Concentrations

This annex is not a part of the requirements of this NFPA document but is included for informational purposes only.

C.1 General. Table C.1(a) and Table C.1(b) provide values for limiting oxidant concentration (LOC) using nitrogen, carbon dioxide, and inert dust as the diluent. Table C.1(a) provides LOC values for flammable gases, and Table C.1(b) provides data for combustible dust suspensions.

Table C.1(a) Limiting Oxidant Concentrations for Flammable Gases When Nitrogen or Carbon Dioxide Are Used as Diluents

	Adjusted LOC (Volume % O_2 Above Which Deflagration Can Take Place) per 7.2.3			Original LOC (Volume % O_2 Above Which Deflagration Can Take Place)	
Gas/Vapor	N_2–Air Mixture	CO_2–Air Mixture	Reference*	N_2–Air Mixture	CO_2–Air Mixture
Methane	10.0	12.5	1	12.0	14.5
Ethane	9.0	11.5	1	11.0	13.5
Propane	9.5	12.5	1	11.5	14.5
n-Butane	10.0	12.5	1	12.0	14.5
n-Butyl acetate	9.0	—	9	9.0	—
Isobutane	10.0	13.0	1	12.0	15.0
n-Pentane	10.0	12.5	1	12.0	14.5
Isopentane	10.0	12.5	2	12.0	14.5
n-Hexane	10.0	12.5	1	12.0	14.5
n-Heptane	9.5	12.5	2	11.5	14.5
Ethanol	8.7	—	9	8.7	—
Ethylene	8.0	9.5	1	10.0	11.5
Propylene	9.5	12.0	1	11.5	14.0
1-Butene	9.5	12.0	1	11.5	14.0
Isobutylene	10.0	13.0	4	12.0	15.0
Butadiene	8.5	11.0	1	10.5	13.0
3-Methyl-1-butene	9.5	12.0	4	11.5	14.0
Benzene	10.1	12.0	1, 7	11.4	14.0
Toluene	9.5	—	7, 9	9.5	—
Styrene	9.0	—	7	9.0	—
Ethylbenzene	9.0	—	7	9.0	—
Vinyltoluene	9.0	—	7	9.0	—
Divinylbenzene	8.5	—	7	8.5	—
Diethylbenzene	8.5	—	7	8.5	—
Cyclopropane	9.5	12.0	1	11.5	14.0
Gasoline					
(73/100)	10.0	13.0	2	12.0	15.0
(100/130)	10.0	13.0	2	12.0	15.0
(115/145)	10.0	12.5	2	12.0	14.5
Kerosene	8.0 (150°C)	11.0 (150°C)	5	10.0 (150°C)	13.0 (150°C)
JP-1 fuel	8.5 (150°C)	12.0 (150°C)	2	10.5 (150°C)	14.0 (150°C)
JP-3 fuel	10.0	12.5	2	12.0	14.5
JP-4 fuel	9.5	12.5	2	11.5	14.5
Natural gas (Pittsburgh)	10.0	12.5	1	12.0	14.5

(continues)

Copyright 2014 National Fire Protection Association (NFPA). Licensed, by agreement, for individual use and download on October 4, 2014 to LEADER and READER for designated user PATTARAPORN SRITRAKOOL. No other reproduction or transmission in any form permitted without written permission of NFPA. For inquires or to report unauthorized use, contact licensing@nfpa.org.

Table C.1(a) *Continued*

Gas/Vapor	Adjusted LOC (Volume % O_2 Above Which Deflagration Can Take Place) per 7.2.3		Reference*	Original LOC (Volume % O_2 Above Which Deflagration Can Take Place)	
	N_2–Air Mixture	CO_2–Air Mixture		N_2–Air Mixture	CO_2–Air Mixture
n-Butyl chloride	12.0	—	3	14.0	—
	10.0 (100°C)	—	3	12.0 (100°C)	—
Methylene chloride	17.0 (30°C)	—	3	19.0 (30°C)	—
	15.0 (100°C)	—	3	17.0 (100°C)	—
Ethylene dichloride	11.0	—	3	13.0	—
	9.5 (100°C)	—	3	11.5 (100°C)	—
1,1,1-Trichloroethane	12.0	—	3	14.0	—
Trichloroethylene	7.0 (100°C)	—	3	9.0 (100°C)	—
Acetone	9.5	12.0	4	11.5	14.0
n-Butanol	NA	14.5 (150°C)	4	NA	16.5 (150°C)
Carbon disulfide	3.0	5.5	4	5.0	7.5
Carbon monoxide	3.5	3.5	4	5.5	5.5
Ethanol	8.5	11.0	4	10.5	13.0
2-Ethyl butanol	7.5 (150°C)	—	4	9.5 (150°C)	—
Ethyl ether	8.5	11.0	4	10.5	13.0
Hydrogen	3.0	3.2	4	5.0	5.2
Hydrogen sulfide	5.5	9.5	4	7.5	11.5
Isobutyl acetate	9.1	—	9	9.1	—
Isobutyl alcohol	9.1	—	9	9.1	—
Isobutyl formate	10.5	13.0	4	12.5	15.0
Isopropyl acetate	8.8	—	9	8.8	—
Isopropyl alcohol	9.5	—	10	9.5	—
Methanol	8.0	10.0	4	10.0	12.0
Methyl acetate	9.0	11.5	4	11.0	13.5
Propylene oxide	5.8	—	8	7.8	—
Methyl ether	8.5	11.0	4	10.5	13.0
Methyl formate	8.0	10.5	4	10.0	12.5
Methyl ethyl ketone	9.0	11.5	4	11.0	13.5
n-Propyl acetate	10.1	—	10	10.1	—
n-Propyl alcohol	8.6	—	9	8.6	—
UDMH (dimethyl-hydrazine)	5.0	—	6	7.0	—
Vinyl chloride	13.4	—	7	13.4	—
Vinylidiene chloride	15.0	—	7	15.0	—

Notes:
1. See 7.7.2 for the required oxygen level in equipment.
2. Data were determined by laboratory experiment conducted at atmospheric temperature and pressure. Vapor–air–inert gas samples were placed in explosion tubes and ignited by electric spark or pilot flame.

*References:
1. J. F. Coward and G. W. Jones (1952).
2. G. W. Jones, M. G. Zabetakis, J. K. Richmond, G. S. Scott, and A. L. Furno (1954).
3. J. M. Kuchta, A. L. Furno, A. Bartkowiak, and G. H. Martindill (1968).
4. M. G. Zabetakis (1965).
5. M. G. Zabetakis and B. H. Rosen (1957).
6. Unpublished data, U.S. Bureau of Mines.
7. Unpublished data, Dow Chemical Co.
8. U.S. Bureau of Mines.
9. L. G. Britton (2002).
10. Unpublished data, Dow Chemical Co., 2002.

Copyright 2014 National Fire Protection Association (NFPA). Licensed, by agreement, for individual use and download on October 4, 2014 to LEADER and READER for designated user PATTARAPORN SRITRAKOOL. No other reproduction or transmission in any form permitted without written permission of NFPA. For inquires or to report unauthorized use, contact licensing@nfpa.org.

Table C.1(b) Limiting Oxidant Concentrations for Combustible Dust Suspensions When Using Nitrogen as a Diluent

Dust	Median Particle Diameter by Mass (μm)	LOC (Volume % O_2 Above Which Deflagration Can Take Place), N_2–Air Mixture
Cellulosic Materials		
Cellulose	22	9
Cellulose	51	11
Wood flour	27	10
Food and Feed		
Pea flour	25	15
Corn starch	17	9
Waste from malted barley	25	11
Rye flour	29	13
Starch derivative	24	14
Wheat flour	60	11
Coals		
Brown coal	42	12
Brown coal	63	12
Brown coal	66	12
Brown coal briquette dust	51	15
Bituminous coal	17	14
Plastics, Resins, Rubber		
Resin	<63	10
Rubber powder	95	11
Polyacrylonitrile	26	10
Polyethylene, h.p.	26	10
Pharmaceuticals, Pesticides		
Amino-phenazone	<10	9
Methionine	<10	12
Intermediate Products, Additives		
Barium stearate	<63	13
Benzoyl peroxide	59	10
Bisphenol A	34	9
Cadmium laurate	<63	14
Cadmium stearate	<63	12
Calcium stearate	<63	12
Methyl cellulose	70	10
Dimethyl terephthalate	27	9
Ferrocene	95	7
Bistrimethyl-silyl-urea	65	9
Naphthalic acid anhydride	16	12
2-Naphthol	<30	9
Paraform-aldehyde	23	6
Pentaerythritol	<10	11
Metals, Alloys		
Aluminum	22	5
Calcium/aluminum alloy	22	6
Ferrosilicon magnesium alloy	17	7
Ferrosilicon alloy	21	12
Magnesium alloy	21	3
Other Inorganic Products		
Soot	<10	12
Soot	13	12
Soot	16	12
Others		
Bentonite derivative	43	12

Source: R. K. Eckhoff, *Dust Explosions in the Process Industries*, 2003.
Note: The data came from 1 m^3 and 20 L chambers using strong chemical igniters.

C.2 General. Table C.2 provides data on the concentration of inert dust required to inert selected combustible dusts.

Table C.2 Inerting of Dust Clouds by Mixing the Combustible Dust with Inert Dust

Combustible Dust		Inert Dust		
Dust	Median Particle Size by Mass (μm)	Type of Dust	Median Particle Size by Mass (μm)	Minimum Mass % Inert of Total Mass Required for Inerting
Methyl cellulose	70	$CaSO_4$	<15	70
Organic pigment	<10	$NH_4H_2PO_4$	29	65
Bituminous coal	20		14	65
Bituminous coal	20	$NaHCO_3$	35	65
Sugar	30	$NaHCO_3$	35	50

Source: R. K. Eckhoff, *Dust Explosions in the Process Industries*, 2003.
Note: Data were obtained from tests conducted in 1 m^3 Standard ISO (1985) vessel with a 10 kJ chemical igniter.

Copyright 2014 National Fire Protection Association (NFPA). Licensed, by agreement, for individual use and download on October 4, 2014 to LEADER and READER for designated user PATTARAPORN SRITRAKOOL. No other reproduction or transmission in any form permitted without written permission of NFPA. For inquires or to report unauthorized use, contact licensing@nfpa.org.

Annex D Ventilation Calculations

This annex is not a part of the requirements of this NFPA document but is included for informational purposes only.

D.1 Time Required for Ventilation. An estimate of the time required to reduce the concentration of a flammable gas to a safe limit by purging with fresh air can be calculated using the method that follows.

For an enclosed volume, V, the change in concentration, dC, over a given time, dt, using a fixed flow rate of fresh air, Q, is given by Equation D.1:

$$(V)dC = Q(C)dt \quad \textbf{(D.1)}$$

By rearranging,

$$\int_{c_0}^{c} \frac{dC}{C} = \frac{Q^t}{V_0}\int dt \quad \textbf{(D.2)}$$

where:
C = concentration
C_O = initial concentration of gas
Q^t = flow rate
t = time required to reach the desired concentration
V_O = initial volume

Integrating Equation D.2 yields the following:

$$\ln\left(\frac{C}{C_0}\right) = \left(\frac{-Q}{V}\right)t \quad \textbf{(D.3)}$$

Equation D.3 assumes perfect mixing. Because this is not the case in actual practice, a correction factor, K, should be introduced as follows:

$$\ln\left(\frac{C}{C_0}\right) = \left(\frac{-Q}{V}\right)K(t) \quad \textbf{(D.4)}$$

In perfect mixing, K equals 1.0. Table D.1 lists values of K for certain conditions. Few data exist on defining the degree of mixing. Most authorities recommend a K-value of not greater than 0.25.

Table D.1 Mixing Efficiency for Various Ventilation Arrangements

	Efficiency (K) Values	
Method of Supply	**Single Exhaust Opening**	**Multiple Exhaust Openings**
No Positive Supply		
Infiltration through cracks	0.2	0.3
Infiltration through open doors or windows	0.2	0.4
Forced Air Supply		
Grilles and registers	0.3	0.5
Diffusers	0.5	0.7
Perforated ceiling	0.8	0.9

Consider the problem of reducing the gasoline vapor concentration of an enclosure of 28 m^3 (1000 ft^3), using a 56 m^3/min (2000 ft^3/min) ventilation rate, from 20 volume percent to the following:

(1) The upper flammable limit, or 7.6 percent
(2) The lower flammable limit, or 1.4 percent
(3) Twenty-five percent of the lower flammable limit, or 0.35 percent

The difference between $K = 1.0$ (perfect mixing) and $K = 0.2$ in calculating the time needed to reduce the concentration to the levels specified can be shown using Equation D.3 as follows:

$$\ln\left(\frac{7.6}{20.0}\right) = \left(\frac{-2000}{1000}\right)K(t) \quad \textbf{(D.5)}$$
$$\ln 0.38 = -2K(t)$$

$$t = \frac{\ln\ 0.38}{-2K} = \frac{-0.97}{-2K} = \frac{0.485}{K} \quad \textbf{(D.6)}$$

For $K = 1$, $t = 0.49$ min. For $K = 0.2$, $t = 2.5$ min.

$$\ln\left(\frac{1.4}{20.0}\right) = \left(\frac{-2000}{1000}\right)K(t) \quad \textbf{(D.7)}$$
$$\ln\ 0.07 = -2K(t)$$

$$t = \frac{\ln\ 0.07}{-2K} = \frac{-2.66}{-2K} = \frac{1.33}{K} \quad \textbf{(D.8)}$$

For $K = 1$, $t = 1.33$ min. For $K = 0.2$, $t = 6.65$ min.

$$\ln\left(\frac{0.35}{20.0}\right) = \left(\frac{-2000}{1000}\right)K(t) \quad \textbf{(D.9)}$$
$$\ln 0.018 = -2K(t)$$

$$t = \frac{\ln 0.018}{-2K} = \frac{-4.02}{-2K} = \frac{2.01}{K} \quad \textbf{(D.10)}$$

For $K = 1$, $t = 2$ min. For $K = 0.2$, $t = 10$ min.

D.2 Number of Air Changes Required for Inerting. The calculation method described in Section D.1 provides a solution expressed directly in terms of time. To develop a solution in terms of required number of air changes, the equation is written as follows:

$$\frac{C}{C_0} = e^{-KN} \quad \textbf{(D.11)}$$

where:
N = the required number of air changes

Equation D.11 can be rewritten as follows:

$$\ln\left(\frac{C}{C_0}\right) = -KN \quad \textbf{(D.12)}$$

Copyright 2014 National Fire Protection Association (NFPA). Licensed, by agreement, for individual use and download on October 4, 2014 to LEADER and READER for designated user PATTARAPORN SRITRAKOOL. No other reproduction or transmission in any form permitted without written permission of NFPA. For inquires or to report unauthorized use, contact licensing@nfpa.org.

Using the example in Section D.1, the number of air changes required to reach the upper flammable limit, 7.6 percent, at $K = 0.2$, is as follows:

$$\ln\left(\frac{7.6}{20.0}\right) = -0.2N \quad \textbf{(D.13)}$$

$$N = \frac{\ln 0.38}{-0.2} = \frac{-0.97}{-0.2} = 4.8 \quad \textbf{(D.14)}$$

Because the airflow rate is 56 m^3/min (2000 ft^3/min) and the volume of the enclosure is 28 m^3 (1000 ft^3), a complete air change takes 0.5 minute. Equation D.14 indicates that 4.8 air changes are needed. This translates to a required time of 2.4 minutes, or exactly that calculated in Section D.1.

D.3 Buildup of Combustible Concentration in Enclosed Area. If a constant source of a flammable gas, such as a leak, is introduced into an enclosed volume, Equation D.12 should be modified as follows:

$$C = \frac{G}{Q}\left(1 - e^{-KN}\right) \quad \textbf{(D.15)}$$

where:
C = concentration
G = release rate [m^3/min (ft^3/min)]
Q = airflow rate [m^3/min (ft^3/min)]
K = mixing efficiency factor
N = number of theoretical air changes

As an example, consider a leak of 2.8 m^3/min (100 ft^3/min) of a 15 percent flammable gas–air mixture in a room of 28 m^3 (1000 ft^3). How long would it take to reach a concentration of 5 percent throughout the enclosure, assuming a mixing coefficient, K, equal to 0.2? Thus,

$C = 0.05$
$G = 15$ ft^3/min (100×0.15)
$Q = 85$ ft^3/min $(100 - 15)$
$K = 0.2$

Equation D.15 can be rewritten into a more convenient logarithmic form as follows:

$$\begin{aligned} \ln\left(1 - \frac{CQ}{G}\right) &= -KN \\ \ln\left[1 - \frac{0.05(85)}{15}\right] &= -0.2N \\ \ln(0.71667) &= -0.2N \\ -0.33314 &= -0.2N \\ 1.67 &= N \end{aligned} \quad \textbf{(D.16)}$$

Because the volume is 100 ft^3/min and the leak is at 1000 ft^3,

$$\left(\frac{1000\ ft^3}{100\ ft^3/min}\right)(1.67) = 16.7\ min \quad \textbf{(D.17)}$$

A concentration of 5 percent is reached in 16.7 minutes. Equation D.12 and Equation D.15 can be plotted as shown in Figure D.3(a) and Figure D.3(b).

With respect to Figure D.3(b), which illustrates a continuous release in an enclosed volume, once a continuous release begins, the combustible concentration increases rapidly until three air changes occur. After three air changes, the bracketed term in Equation D.15 approaches unity and concentration does not change much. Thus, steady-state concentration is independent of air-change rate and actually depends on the volumetric flow of fresh air. For design purposes, it is best to specify in terms of cubic meters per minute (cubic feet per minute) and avoid specifying in terms of air changes per hour.

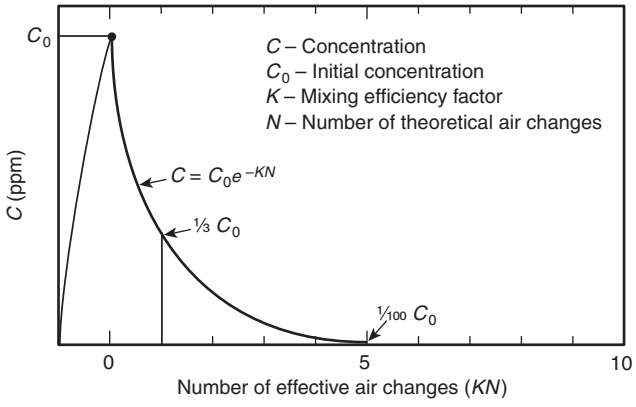

FIGURE D.3(a) Combustible Decay Curve. General Ventilation: Instantaneous Release.

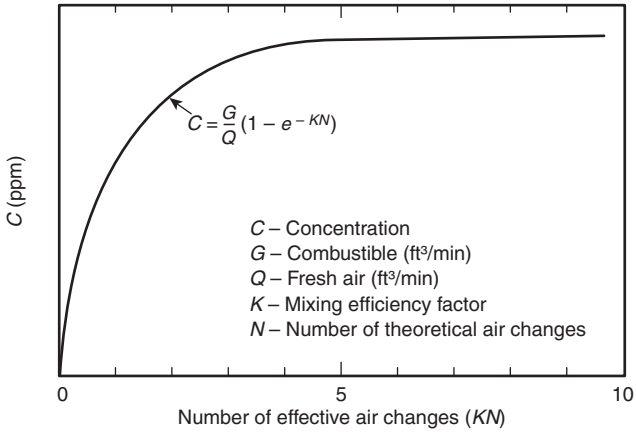

FIGURE D.3(b) Combustible Buildup Curve. General Ventilation: Continuous Release.

Although general ventilation is helpful in removing airborne combustibles, better control can be achieved in many cases by supplementing general ventilation with local ventilation. Local ventilation can be used when the source of emission can be predicted. For example, local ventilation rather than general ventilation is recommended in the following situations:

(1) The operator or ignition sources might be very close to the point of flammable release.
(2) The flammable escape rate is uncertain.
(3) Local ventilation is used to control combustible dusts.

Local exhaust ventilation captures the combustible at its source, and a properly designed system can achieve almost 100 percent effectiveness, provided that the local exhaust pickup can be placed close to the point of release.

Copyright 2014 National Fire Protection Association (NFPA). Licensed, by agreement, for individual use and download on October 4, 2014 to LEADER and READER for designated user PATTARAPORN SRITRAKOOL. No other reproduction or transmission in any form permitted without written permission of NFPA. For inquires or to report unauthorized use, contact licensing@nfpa.org.

Annex E Purging Methods

This annex is not a part of the requirements of this NFPA document but is included for informational purposes only.

E.1 General. Any of several methods might be used to ensure the formation and maintenance of a noncombustible atmosphere in an enclosure to be protected. These include "batch" methods for one-time or occasional use, as in purging equipment during shutdown, and "continuous" methods intended to ensure safe conditions during normal operations. The following is an outline of various purging methods.

E.2 Purging Methods.

E.2.1 Batch Purging. This method includes siphon, vacuum, pressure, and venting to atmosphere.

E.2.2 Continuous Purging. This method includes fixed-rate application and variable-rate or demand application.

E.2.3 Siphon Purging. In this method, equipment might be purged by filling with liquid and introducing purge gas into the vapor space to replace the liquid as it is drained from the enclosure. The volume of purge gas required is equal to the volume of the vessel, and the rate of application can be made to correspond to the rate of draining.

E.2.4 Vacuum Purging. In this method, equipment that normally operates at reduced pressure, or in which it is practical to develop reduced pressure, might be purged during shutdown by breaking the vacuum with purge gas. If the initial pressure is not low enough to ensure the desired low oxidant concentration, it might be necessary to re-evacuate and repeat the process. The amount of purge gas required is determined by the number of applications required to develop the desired oxidant concentration. Where two or more containers or tanks are joined by a manifold and should be purged as a group, the vapor content of each container or tank should be checked to determine that complete purging has been accomplished.

E.2.5 Pressure Purging. In this method, enclosures might be purged by increasing the pressure within the enclosure by introducing purge gas under pressure and, after the gas has diffused, venting the enclosure to the atmosphere. More than one pressure cycle might be necessary to reduce the oxidant content to the desired percentage. Where two or more containers or tanks are joined by a manifold and should be purged as a group, the vapor content of each container or tank should be checked to determine that the desired purging has been accomplished. Where a container filled with combustible material is to be emptied and then purged, purge gas might be applied to the vapor space at a pressure consistent with equipment design limitations, thus accomplishing both the emptying of the vessel and the purging of the vapor space in the same process.

E.2.6 Sweep-Through Purging. This method involves introducing a purge gas into the equipment at one opening and letting the enclosure content escape to the atmosphere through another opening, thus sweeping out residual vapor. The quantity of purge gas required depends on the physical arrangement. A pipeline can be effectively purged with only a little more than one volume of purge gas if the gas can be introduced at one end and the mixture can be released at the other. However, vessels require quantities of purge gas much in excess of their volume.

If the system is complex, involving side branches through which circulation cannot be established, the sweep-through purging method might be impractical, and pressure or vacuum purging might be more appropriate.

The relationship between the number of volumes of purge gas circulated and the reduction in concentration of the critical component in original tank contents, assuming complete mixing, is shown on the graph in Figure E.2.6.

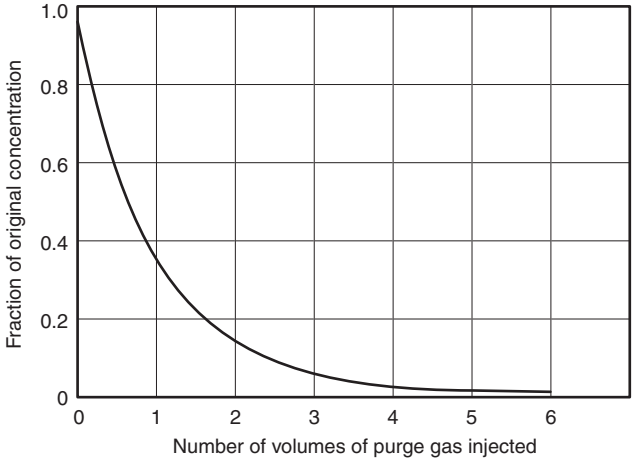

FIGURE E.2.6 Dilution Ratio — Purging at Atmospheric Pressure (Complete Mixing Assumed).

The following points should be noted:

(1) The total quantity required might be less than that for a series of steps of pressure purging.
(2) Four to five volumes of purge gas are sufficient to almost completely displace the original mixture, assuming complete mixing.

E.2.7 Fixed-Rate Purging. This method involves the continuous introduction of purge gas into the enclosure at a constant rate, which should be sufficient to supply the peak requirement in order that complete protection is provided, and a corresponding release of purge gas and whatever gas, mist, or dust has been picked up in the equipment.

The following information regarding the fixed-rate purging method should be noted:

(1) The advantages are simplicity, lack of dependence on devices such as pressure regulators, and possible reduced maintenance.
(2) The disadvantages are as follows:
   (a) Continuous loss of product where the space contains a volatile liquid, due to constant "sweeping" of the vapor space by the purge gas
   (b) Increased total quantity of purge gas, since it is supplied regardless of whether it is needed
   (c) Possible disposal problems (toxic and other effects) for the mixture continuously released

Figure E.2.7 shows a method of flow control that can be used with fixed-rate purging.

Copyright 2014 National Fire Protection Association (NFPA). Licensed, by agreement, for individual use and download on October 4, 2014 to LEADER and READER for designated user PATTARAPORN SRITRAKOOL. No other reproduction or transmission in any form permitted without written permission of NFPA. For inquires or to report unauthorized use, contact licensing@nfpa.org.

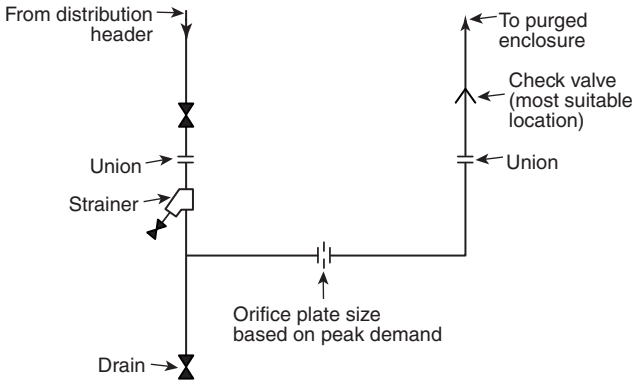

FIGURE E.2.7 Method of Flow Control for Use with Fixed-Rate Purging.

E.2.8 Variable-Rate or Demand Purging. This method involves the introduction of purge gas into an enclosure at a variable rate that is dependent on demand and is usually based on maintaining within the protected enclosure an arbitrarily selected pressure slightly above that of the surrounding atmosphere. Peak supply rate should be computed as described in Section E.3.

The following information regarding the variable-rate or demand purging should be noted:

(1) The advantages are that purge gas is supplied only when actually needed and that it is possible, when desirable, to completely prevent influx of air.
(2) A disadvantage is that operation depends on the functioning of pressure control valves that operate at sometimes very low pressure differentials, which are sometimes difficult to maintain.

Figure E.2.8(a) shows a method of flow control that can be used with variable-rate purging. Figure E.2.8(b) shows an alternative method that is applicable where the purge gas requirement during out-pumping is a large part of the peak demand.

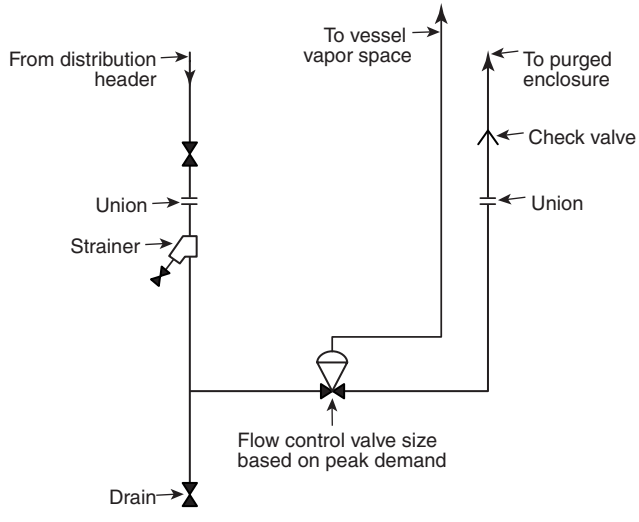

FIGURE E.2.8(a) Method of Flow Control for Use with Variable-Rate Purging.

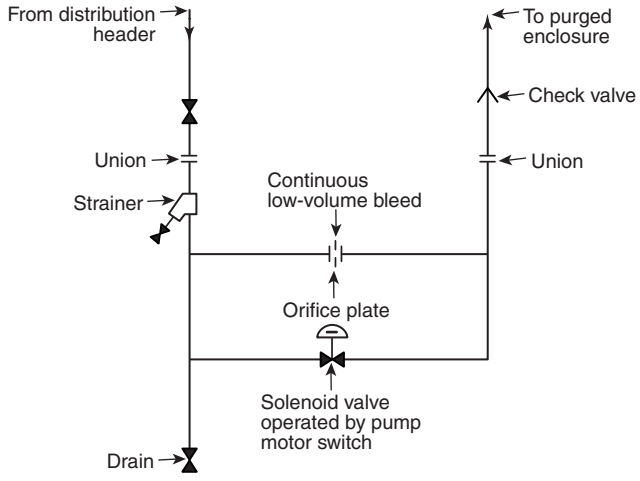

FIGURE E.2.8(b) Alternative Method of Flow Control for Use with Variable-Rate Purging.

E.3 Calculation of Peak Purge Gas Rates. Peak demand is described in Section 7.6 as the total expected system requirements.

For any one element of the system, the peak demand is controlled by factors such as the following:

(1) Maximum withdrawal rate
(2) Temperature change
(3) Leaks
(4) Rapid atmospheric pressure changes

Cooling of the contents of a vessel containing a vapor or hot liquid presents a special and frequent case of vacuum purging. Condensation of vapor to a liquid or reduction in pressure of the gas phase can rapidly produce partial vacuum, which could result in the following conditions:

(1) Imposition of excessive stresses on equipment or collapse of the vessel
(2) Sucking in of air from joints that might not leak under internal pressure
(3) Creation of a need for high supply rates of inert gas

Every situation should be treated individually. The peak supply rate should be computed for each case, with consideration given to cooling rate, vessel size, and configuration, which determine the rate of condensation.

If neither the reducing valve nor the source gas can be relied on to supply the amount of inert gas required to prevent reduction of pressure below atmospheric, the vessel might have to be designed for full vacuum.

For a vessel that contains a liquid, the purge gas demand from liquid withdrawal, change of liquid composition from mixing, or increasing solubility of purge gas in the liquid is the greater of one of the following factors:

(1) The volume equivalent of the capacity of the largest pump that can withdraw liquid
(2) The maximum possible gravity outflow rate

Where two tanks are manifolded together so that one can flow by gravity into the other, a vapor space interconnection is sometimes used to reduce the required purge gas supply from outside sources.

Copyright 2014 National Fire Protection Association (NFPA). Licensed, by agreement, for individual use and download on October 4, 2014 to LEADER and READER for designated user PATTARAPORN SRITRAKOOL. No other reproduction or transmission in any form permitted without written permission of NFPA. For inquires or to report unauthorized use, contact licensing@nfpa.org.

For outdoor tanks operating at or near atmospheric pressure, the maximum demand from temperature change occurs in outdoor tanks operating at near atmospheric pressure as a result of sudden cooling by a summer thunderstorm. The rate of purge gas supply necessary to prevent vessel pressure falling significantly below atmospheric pressure can be calculated as follows:

(1) For tanks over 3.028 million L (800,000 gal) capacity, 0.056 m^3 (2 ft^3) of purge gas per hour for each square foot of total shell and roof area
(2) For smaller tanks, 0.028 m^3 (1 ft^3) purge gas per hour for each 151 L (40 gal) of tank capacity or the rate corresponding to a mean rate of the change of the vapor space temperature of 38°C (100°F) per hour

See API Standard 2000, *Venting Atmospheric and Low-Pressure Storage Tanks Nonrefrigerated and Refrigerated,* for further information on the calculation of rate of purge gas supply.

The rates for temperature change and liquid withdrawal should be added unless a special circumstance exists that prevents them from occurring simultaneously.

In some equipment, such as pulverizers, the rate of purge gas supply necessary to exclude air might be dominated by leakage, and temperature change can be ignored.

Annex F Flame Arresters

This annex is not a part of the requirements of this NFPA document but is included for informational purposes only.

F.1 General Information. Flame arresters are passive devices designed to prevent propagation of gas flames. Typical applications are to prevent flames entering a system from outside (such as via a tank vent) or propagating within a system (such as from one tank to another). Flame arrestment is achieved by a permeable barrier, usually consisting of metallic filter discs containing narrow channels, which removes heat and free radicals from the flame fast enough to both quench it within the filter discs and prevent re-ignition of the hot gas on the protected side of the arrester. These metallic filter discs are known as "elements." [Perry]

Table F.1 shows an overview of operating principle, flame arrester type, and typical field of application of flame arresters.

To avoid the misapplication of flame arresters it is necessary to further subdivide them into application groupings, where the expected process conditions and location in the piping affect the ability of the different designs to stop flame propagation. In-line flame arresters are divided into in-line deflagration arresters, in-line stable detonation arresters, and in-line unstable detonation arresters. End-of-line flame arresters are not applicable to isolation within closed systems. This type of flame arrester is limited to external ignition sources. End-of line flame arresters are divided based on the expected longest burning time (fuel continues to be delivered) into atmospheric deflagration, short time burning, and endurance burning. It is important to understand the function of such a safety device. There are several different flame-arresting technologies in the market place, which are described in detail in Förster (2001a). In the following, only the so-called static flame arresters are reviewed. Static flame arresters are independent of any kind of secondary energy supply and have no moving parts that could lead to malfunction. Therefore, they are a highly reliable safety means if applied to the process in the right way.

In simplified terms, a static flame arrester is a heat exchanger that absorbs the heat from a deflagration or a detonation flame front, thereby extinguishes the flame, and allows only the vapors to pass through the arrester.

As mentioned, selecting the correct flame arrester is one of the problems encountered in the flame arrester market today. The complexity involved in understanding the combustion process when selecting flame protection devices leads to confusion and misapplications.

Equally important to understanding the combustion process is the clear understanding of the boundary conditions for proper installation. Many flame arresters are tested by an independent third party to obtain an approval that proves the arrester has passed specific test conditions and installation configurations. If the arrester is installed incorrectly, this approval is void because the arrester is likely to fail. Probably the most common misapplication of this kind in the industry is the installation of end-of-line flame arresters into an in line mode, as a result of environmental regulations that require the routing of vent vapors from free venting tanks into vapor recovery or vapor destruction systems (flares, thermal oxidizers) to reduce emissions. In most cases, the original installation of the end-of-line flame arrester was safe but, after being tied into a complex vent header system, the end-of-line flame arrester is now exposed to in-line flame velocities and pressures, which can exceed the test conditions and make the arrester fail (Davies and Heidermann 2006).

Table F.1 Operating Principles of Flame Arrester*

Operating Principles	Flame Arrester Type	Field of Application
Quenching the flame in narrow gaps	Static flame arrester (in-line and end-of-line)	General use
Producing flow velocities above flame velocity by valve action	High velocity vent valve (end-of-line)	Tank venting
Producing and monitoring flow velocities above flame velocity by action of external equipment	Flow controlled aperture (end-of-line)	Burner injection, stacks
Forming a liquid seal (siphon) by liquid product in a product line	Liquid product flame arrester (in-line)	Liquid-filled lines
Breaking the flow of explosive mixture into discrete bubbles in a water column	Hydraulic flame arrester (in-line)	Gas–air mixtures loaded with particles (e.g., dust, droplets)

*See Annex H, Förster (2001a) and Förster (2001b).

Copyright 2014 National Fire Protection Association (NFPA). Licensed, by agreement, for individual use and download on October 4, 2014 to LEADER and READER for designated user PATTARAPORN SRITRAKOOL. No other reproduction or transmission in any form permitted without written permission of NFPA. For inquires or to report unauthorized use, contact licensing@nfpa.org.

F.2 Flame Arrester Use. This section explains the different processes of combustion and the principal hazards and situations arresters are tested for.

Flame arresters can be installed correctly only if engineers understand the combustion process and know under which conditions (process pressure, temperature, oxygen concentration, distance from ignition source, in-line, end-of-line) the flame arrester was tested.

For flame arrester applications, the combustion process can be differentiated by stabilized burning and explosion [Figure F.2(a)]. Stabilized burning is a combustion process in which a steady flame occurs for a short time or a long time (endurance burning). These combustion processes can be present during the venting of tanks or reactors. Depending on the time during which a combustible gas mixture vents, short time or endurance burning can be present. A typical endurance-burning situation may occur during the filling process of a storage tank, which can take several hours or even up to 2 days in the petrochemical industry.

The combustion process concerning explosion can be differentiated into deflagration, with flame front velocities below the speed of sound and detonations with flame velocities above the speed of sound. For deflagrations, we have to distinguish between unconfined deflagration, which mainly occurs at end-of-line, that is, at conservation vents on top of a tank or reactor during the out breathing process, and confined deflagration, which occurs within piping systems leading to vapor recovery or vapor destruction units (i.e., incinerators or flares). For a better understanding of the confined combustion process in piping systems, see Figure F.2(b).

This figure shows the velocity and pressure buildup in a confined piping system. If an explosive air–gas mixture (i.e., waste and air) is ignited in a tube (i.e., burner), the flame propagation starts with a deflagration *[see Figure F.2(b)]*. A deflagration is a combustion wave that propagates by the transfer of heat and mass to the unburned gas ahead of it. During this period the combustion occurs behind the pressure wave. The influence of temperature extends the gas volume; by this the pressure increases the velocity, and turbulence is increased also. The rate of turbulence increases the combustion rate and the kinetics of the combustion reaction are mainly influenced by temperature and so the combustion front picks up close to the pressure wave. Usually the flame velocity is subsonic at this time. Under suitable and complex combinations of circum-

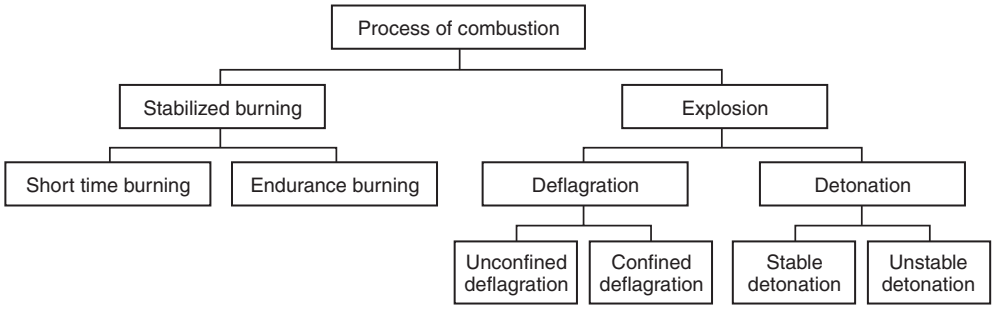

FIGURE F.2(a) Differentiating the Process of Combustion.

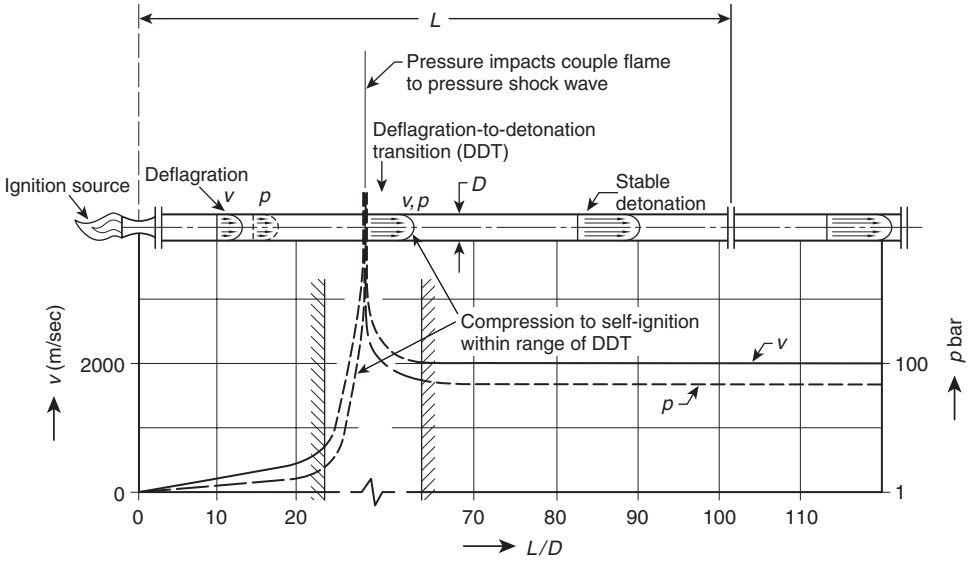

v = flame speed accelerated by increasing turbulences
p = pressure increasing by expansion of burnt gases (shock wave)

FIGURE F.2(b) Flame Speed and Pressure Curve of a Confined Explosion Process.

Copyright 2014 National Fire Protection Association (NFPA). Licensed, by agreement, for individual use and download on October 4, 2014 to LEADER and READER for designated user PATTARAPORN SRITRAKOOL. No other reproduction or transmission in any form permitted without written permission of NFPA. For inquires or to report unauthorized use, contact licensing@nfpa.org.

stances [including gas composition, running up distance (length of run from the ignition source), L/D ratio > 50 (L is the length from ignition source, D is the inner pipe diameter), flame front turbulence-creating factors (i.e., bends)] an advancing flame front can accelerate and change from the deflagration mode to the unstable detonation. This superimposed combustion area is evidenced by a rapid and sharp escalation of temperature and pressure. In this period pressure has increased to a self-ignition point of the gases mixture. After reaching a maximum pressure the unstable deflagration turns into a stable detonation. Here the flame moves through the gas above the speed of sound (supersonic) into unreacted gas *[see Figure F.2(b)]*. It is evident that such pressure and flame sources should be prevented for plant protection or, if inevitable, be controlled by protection systems.

As mentioned, the most common misapplication of flame arresters is to install an end-of-line tested flame, arrester in in-line applications, incinerators, flares, or any other system with a continuous ignition source present.

The second biggest mistake is to assume that any kind of in-line flame arrester is truly endurance burning proof.

F.3 Flame Arrester Testing. To examine the complexity of this problem, this section explains the difference between the end-of-line test and the in-line testing of a flame arrester and shows the different hazardous setups the tests have been developed for. It then describes the different methods of endurance burning testing for in-line detonation arresters.

F.3.1 End-of-Line Hazard and Test Procedure. Figure F.3.1 shows the typical hazards for which the test procedures of end-of-line flame arresters have been developed. The figure shows a vessel (tank, reactor, etc.) that has an explosive mixture in its interior and exterior. If this explosive mixture is ignited by an ignition source, it is the job of the end-of-line flame arrester to prevent flame propagation into the tank.

The key of the test procedure is that in both tests conducted to North American and European standards an ignition source is used at the open end of a pipe or within a thin plastic bag enclosing the flame arrester. By this method an atmospheric deflagration is produced that has a very slow flame velocity and low explosion pressure at the flame arrester. Consequently, it would be wrong to install this type of arrester in an in-line application, as it is not tested for this condition.

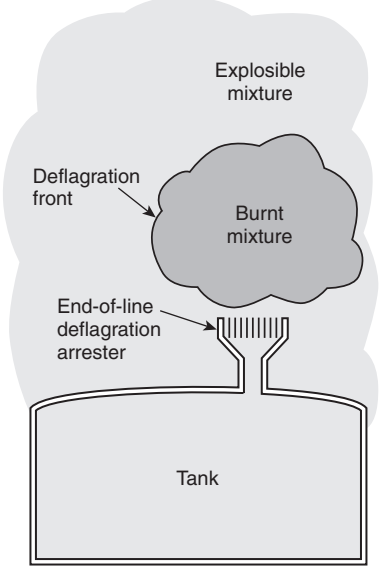

FIGURE F.3.1 Application of End-of-Line Deflagration Arrester. [Förster (2001b)]

F.3.2 In-Line Hazard and Test Procedure. Figure F.3.2(a) shows a typical hazard for which either in-line deflagration or in-line detonation arresters have been developed. An ignition source can be present in front of an incinerator and run back into the process piping; see Figure F.3.2(a).

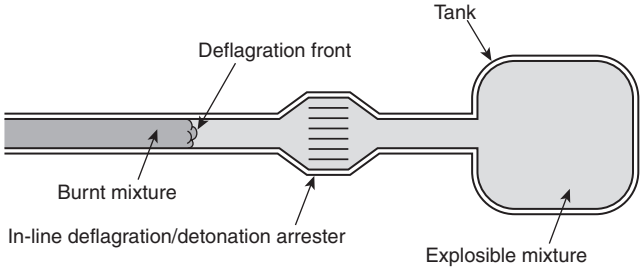

FIGURE F.3.2(a) Application of In-Line Deflagration or Detonation Arrester. [Förster (2001b)]

The difference between in-line deflagration arrester and in-line detonation arrester results from the tested (installed) run-up length of the flame on the unprotected side. Deflagration arresters are limited to a maximum pipe length between possible ignition source and arrester. On the other hand, in-line detonation arresters do not have such limitation. For this reason it is important to know the L/D ratio for a tested in-line deflagration arrester.

For achieving a sufficient degree of safety the test setups in all different test standard ignite the test gas at stochiometric condition (air-to-fuel ratio at or close to 1.0) at the closed end of a pipe, with sufficient run-up distance for testing for either in-line deflagration or in-line detonation *[see Figure F.3.2(b)]*.

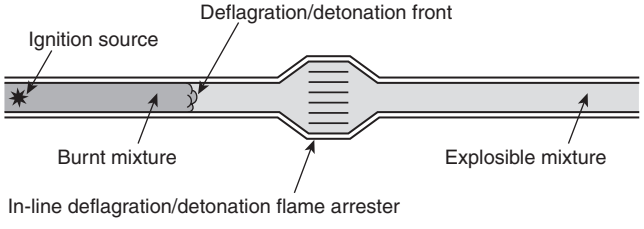

FIGURE F.3.2(b) In-Line Deflagration or Detonation Flame Arrester Testing Example [EN 12874 and Förster (2001b)].

The testing of in-line static deflagration arresters is well established. It can be shown that — for a given flame arrester — the most significant parameter for flame transmission is the transient explosion pressure at the arrester when the flame is just going to enter the arrester element (matrix of quenching gaps) (Hattwig and Steen 2004). The lengths of the pipes on the protected and unprotected sides influence this pressure. (Förster and Kersten 2002)

This knowledge allows flexible pipe length installations in the test set-up as well as specific limits for use: For example,

Copyright 2014 National Fire Protection Association (NFPA). Licensed, by agreement, for individual use and download on October 4, 2014 to LEADER and READER for designated user PATTARAPORN SRITRAKOOL. No other reproduction or transmission in any form permitted without written permission of NFPA. For inquires or to report unauthorized use, contact licensing@nfpa.org.

the ratio of pipe length (between the potential ignition source and the flame arrester) and pipe diameter is not to exceed the tested ratio. A considerable safety margin is introduced by the requirement that at least 10 percent of the cross-sectional area of the pipe has to be open on the ignition source side (for example, the mouth of a burner injection) (Förster and Kersten 2002).

In addition to this, some detonation arrester test standards, such as Factory Mutual (FM), Canadian Standards Association (CSA), and U.S. Coast Guard (USCG), might call for long-time burn test. This, at least in theory, should protect from the hazard in which a flame can stabilize on the surface of the in-line flame arrester element.

F.4 The following procedure is recommended to avoid misapplication of flame arresters:

F.4.1 Step 1: Determine the hazards from propagating flames and flame arrester classification using Table F.4.1 as modified.

Table F.4.1 Hazards from Stabilized Flames and Flame Arrester Classification

Basic Hazard Situation (Application)	Flame Arrester Classification
An unconfined deflagration propagates into an enclosure	End-of-line deflagration (not applicable in this standard)
A deflagration confined by an enclosure propagates to the atmosphere outside	Pre-volume deflagration (applicable in this standard)
A deflagration confined by a pipe propagates into connecting pipework	In-line deflagration (applicable in this standard)
A detonation confined by a pipe propagates into connecting pipework	In-line detonation (applicable in this standard)

F.4.2 Step 2: Determine location of flame arrester.

(1) End of line (tank, reactor, free vent, etc.)
(2) In line (vent header, incinerator, carbon absorption, etc.)
(3) On equipment (blower, dry running vacuum pump)
  (a) There can be an arrester for the following:
    i. Atmospheric deflagration only
    ii. Atmospheric deflagration and short-time burning
    iii. Atmospheric deflagration and short-time burning and endurance burning
  (b) There can be an arrester for the following:
    i. In-line deflagration
    ii. Stable detonation
    iii. Unstable detonation
  (c) There can be an arrester for the following:
    i. Type tested on equipment (vacuum pump, blower, etc.)

F.4.3 Step 3: Determine process condition.

(1) Process vapor (vapor group classification)
(2) Process temperature
(3) Process pressure
(4) Process oxygen concentration
(5) Presence of self-decomposing chemicals

F.4.4 Step 4: Verify approval.

(1) Check if approval is acceptable (USCG, FM Approvals, EN 12874, EN ISO 16852, etc.).
(2) Check test protocol from independent third-party testing to verify if process conditions (Step 3) are met.

F.4.5 Step 5: Evaluate process plant classification hazardous areas.

(1) Class I Division 1 Hazardous (Classified) Location (normally hazardous) (NEC) normally or frequently hazardous (EC, IEC, NEC) Zone 0
(2) Class I Division 1 Hazardous (Classified) Location (normally hazardous) (NEC) occasionally hazardous (EC, IEC, NEC) Zone 1
(3) Class I Division 2 Hazardous (Classified) Location (not normally hazardous) (NEC) not normally hazardous (EC, IEC, NEC) Zone 2

F.4.6 Step 6: Determine number of measures for protection considering area classification using Table F.4.6.

Table F.4.6 Number of Measures Against Flame Transmission

Ignition Source	Zone 0	Zone 1	Zone 2
Permanent, normal operation	3	2	1
Normal faults	2	1	0
Rare faults	1	0	0

F.5 Application Example 1: In many cases, complex mixtures from process-technical plants comprising different products of several operating plants cannot be recovered for cost reasons. To meet environmental regulations they have to be thermally destroyed by a incinerator. Consequently, a permanent ignition source and a potentially explosive mixture can be present either permanently or over a long period of time. Therefore, the measures taken for explosion isolation have to be sufficient, and it is recommended to install certified protective systems. Figure F.5(a) shows an incinerator processing an explosive mixture from a process facility and an example of different layers of protection.

Applying the safety matrix concept results in the use of multiple independent protection measures. In this example three independent measures are required for Zone 0 with a permanent operational ignition source. It is recommended that at least one of the measures is a static flame trap, either a deflagration-approved flame arrester or a detonation-approved flame arrester.

The selection of the suitable safety measures depends upon the operational possibilities and needs precise consideration by a specialist consultant. The in-line deflagration flame arrester should be installed as close as possible to the operational ignition source. It is necessary to choose a temperature-monitored deflagration flame arrester for detecting stable flame on the arrester surface. An in-line deflagration arrester produces a lower pressure drop than an in-line detonation arrester.

In addition to the deflagration flame arrester, a burner inlet combined with volume flow control for air–nitrogen supply for ensuring a minimum cross-sectional flow velocity in case the minimum volume flow is exceeded, is a useful tool to protect against flashback. However, it should be accepted as an

Copyright 2014 National Fire Protection Association (NFPA). Licensed, by agreement, for individual use and download on October 4, 2014 to LEADER and READER for designated user PATTARAPORN SRITRAKOOL. No other reproduction or transmission in any form permitted without written permission of NFPA. For inquires or to report unauthorized use, contact licensing@nfpa.org.

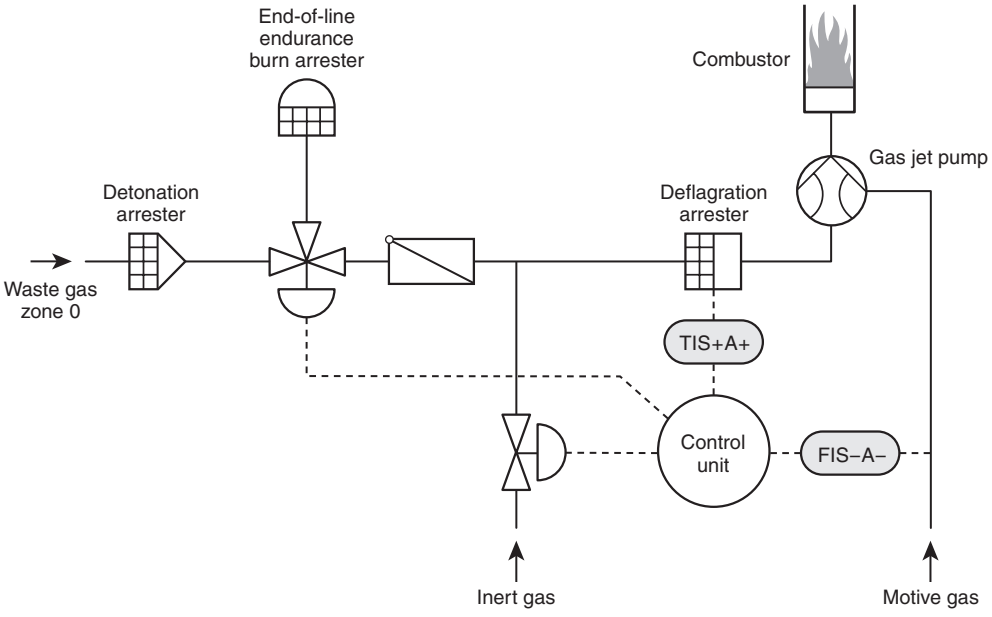

FIGURE F.5(a) Multiple Layer Protection for a Continuous Ignition Source (Zone 0).

independent measure only if it has an independent approval as a dynamic flame trap.

The third measure could be either monitoring of oxygen concentration or a static detonation flame arrester, which can be installed at any distance to the possible ignition source.

These three measures guarantee proper safety-technical decoupling of a possible combustion process and ignition source being sufficient for Zone 0.

Figure F.5(b) shows applications where flame arresters might be used.

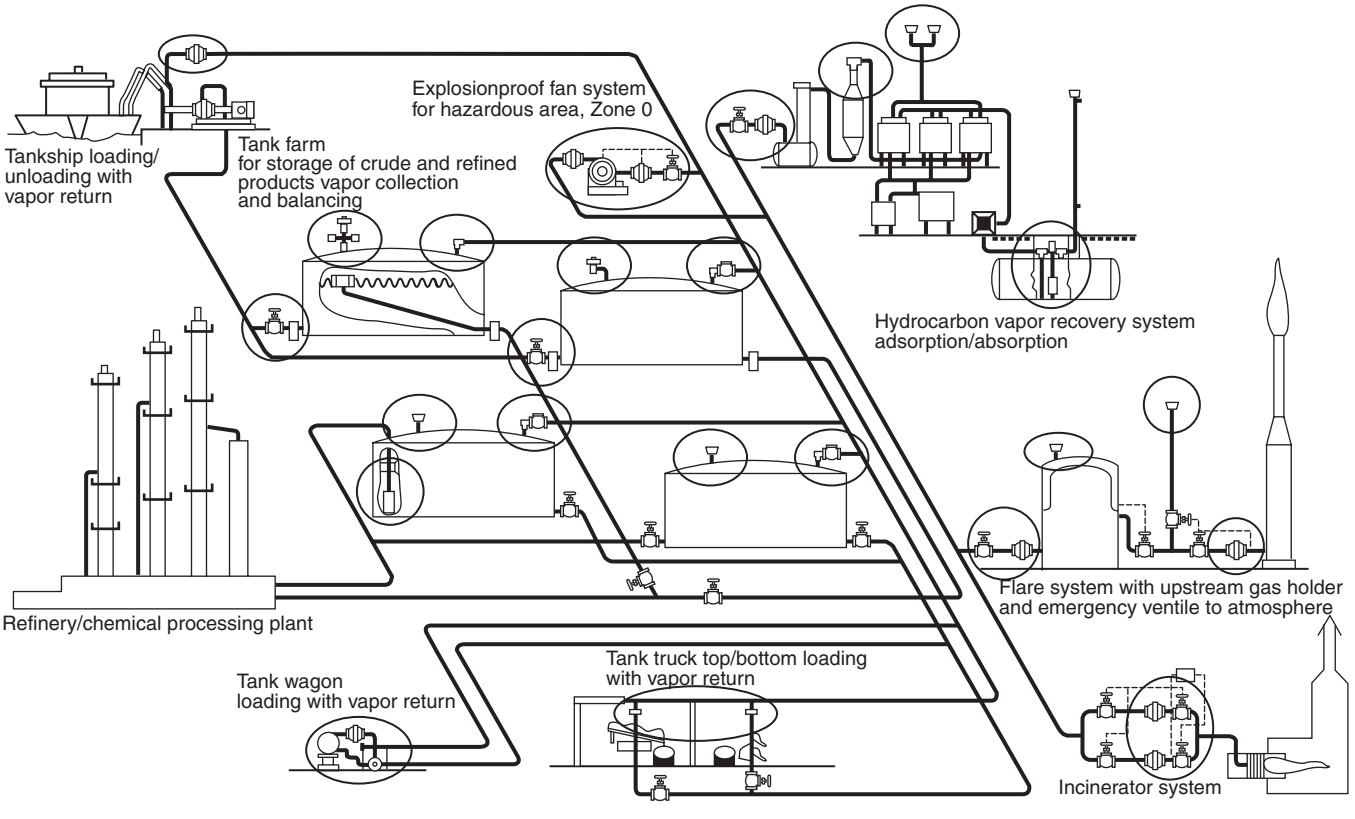

FIGURE F.5(b) Typical Flame Arrester Applications.

Copyright 2014 National Fire Protection Association (NFPA). Licensed, by agreement, for individual use and download on October 4, 2014 to LEADER and READER for designated user PATTARAPORN SRITRAKOOL. No other reproduction or transmission in any form permitted without written permission of NFPA. For inquires or to report unauthorized use, contact licensing@nfpa.org.

Annex G Deflagration Containment Calculation Method for Two Interconnected Vessels

This annex is not a part of the requirements of this NFPA document but is included for informational purposes only.

G.1 When only two vessels are connected without isolation devices, Holbrow et al. provide guidance to apply a correction factor to the P_{max} design value, based on the volume ratio of the vessels and the interconnecting piping diameter. The guidance is limited to situations in which the following conditions apply:

(1) P_{max} is less than 9 bar-gauge (10 bar-absolute).
(2) The two volumes are V_1 and V_2, with V_1 being the larger volume, limited to 20 m^3.
(3) V_1 is to include the volume of interconnecting piping, and ignition is presumed in V_1, unless it can be discounted with a high degree of certainty.
(4) Volume of interconnecting piping is small relative to the vessels.
(5) *L/D* of the interconnecting piping should not cause significant flame acceleration.

The flowchart for this guidance is shown in Figure G.1(a) and the correction factor, *CF*, in Figure G.1(b). With a larger diameter connecting pipe, the pressure in V_2 more readily equalizes with V_1, so the P_{max} adjustment is lower. Holbrow et al. also state, based on their experiments, that piping less than 0.1 m (4 in.) diameter is unlikely to propagate a deflagration.

If the guidance of Holbrow et al. is applied, as in Figure G.1(a), P_{max} is to be expressed in bar-absolute when multiplied by the correction factor(s). The dimensionless pressure ratio, *R*, for use in Equations 13.3.4a or 13.3.4b is then numerically equivalent to the adjusted P_{max} in bar-absolute. [Barton, 2002]

G.2 *Example Determination of R for Linked Vessels*:

Dust properties: $K_{St} = 250$ bar-m/s, $P_{max,a} = 8.5$ bar-absolute

Vessel volumes: 4.5 m^3 and 1.5 m^3

Connecting pipe: Diameter = 0.3 m, length = 5 m, V_P = 0.35 m^3

$$\frac{V_2}{V_1 + V_P} = \frac{1.5}{4.5 + 0.35} = 0.31 \qquad \textbf{(G.2)}$$

From Figure G.1(b), $CF = 2.52$

Following the flow chart in Figure G.1(a):

(1) Ratio of vessel volumes is not less than 0.25.
(2) Vessel volume ratio is 0.25 to 0.5.
(3) Ignition is not possible only in smaller vessel.
(4) Pipe diameter is less than 0.5 m.
(5) Design to $P_{max,a} \cdot CF$.

Theoretical maximum pressure = $P_{max,a} \cdot CF = 8.5 \cdot (2.52) = 21.4$ bar-absolute.

$R = 21.4$ at 25°C [for use in Equation 13.3.4a or 13.3.4b]

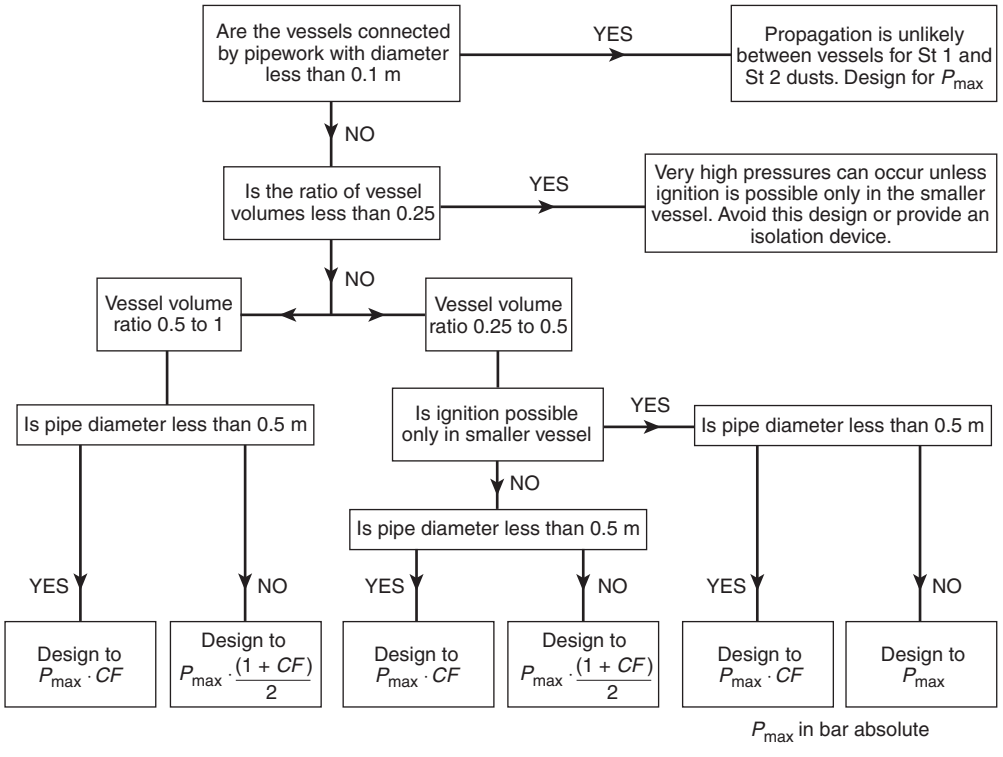

FIGURE G.1(a) Flowchart for Design Pressure Selection in Linked Contained Vessels.

Copyright 2014 National Fire Protection Association (NFPA). Licensed, by agreement, for individual use and download on October 4, 2014 to LEADER and READER for designated user PATTARAPORN SRITRAKOOL. No other reproduction or transmission in any form permitted without written permission of NFPA. For inquires or to report unauthorized use, contact licensing@nfpa.org.

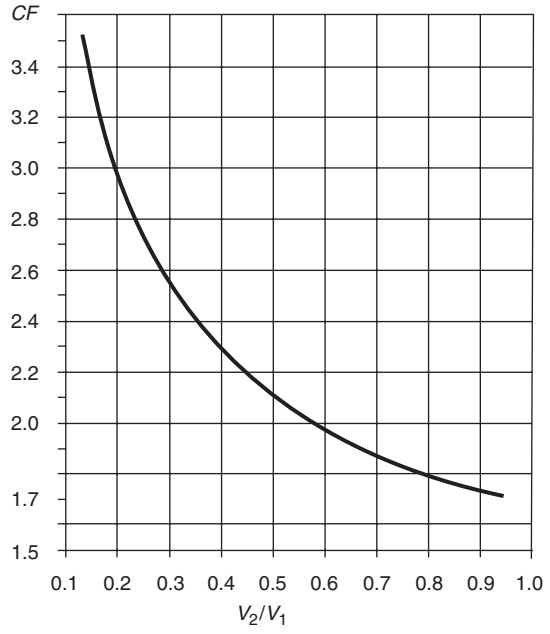

FIGURE G.1(b) Compression Factor for Linked Vessel Guidance (expressing P_{max} in bar-absolute).

Annex H Informational References

H.1 Referenced Publications. The documents or portions thereof listed in this annex are referenced within the informational sections of this standard and are not part of the requirements of this document unless also listed in Chapter 2 for other reasons.

H.1.1 NFPA Publications. National Fire Protection Association, 1 Batterymarch Park, Quincy, MA 02169-7471.

NFPA 51B, *Standard for Fire Prevention During Welding, Cutting, and Other Hot Work*, 2014 edition.

NFPA 68, *Standard on Explosion Protection by Deflagration Venting*, 2013 edition.

NFPA 326, *Standard for the Safeguarding of Tanks and Containers for Entry, Cleaning, or Repair*, 2010 edition.

Fire Protection Guide to Hazardous Materials, 14th edition, 2010.

H.1.2 Other Publications.

H.1.2.1 AIChE Publications. American Institute of Chemical Engineers, Three Park Avenue, New York, NY 10016-5991.

AIChE Center for Chemical Process Safety, *Guidelines for Hazard Evaluation Procedures*, Wiley, New York, 1992.

H.1.2.2 ANSI Publications. American National Standards Institute, Inc., 25 West 43rd Street, 4th Floor, New York, NY 10036.

ANSI/ISA 84.00.01, Parts 13, *Functional Safety: Safety Instrumented Systems for the Process Industry Sector*, 2004.

H.1.2.3 API Publications. American Petroleum Institute, 1220 L Street, NW, Washington, DC 20005.

API 2000, *Venting Atmospheric and Low-Pressure Storage Tanks Nonrefrigerated and Refrigerated*, 4th edition, 1992.

API 2016, *Guidelines and Procedures for Entering and Cleaning Petroleum Storage Tanks*, 2001.

H.1.2.4 ASME Publications. American Society of Mechanical Engineers, Three Park Avenue, New York, NY 10016-5990.

ASME *Boiler and Pressure Vessel Code*, 2007.

H.1.2.5 ASTM Publications. ASTM International, 100 Barr Harbor Drive, P.O. Box C700, West Conshohocken, PA 19428-2959.

ASTM E 1226, *Standard Test Method for Explosibility of Dust Clouds*, 2010.

ASTM E 1491, *Standard Test Method for Minimum Autoignition Temperatures of Dust Clouds*, 2006.

ASTM E 1515, *Standard Test Method for Minimum Explosible Concentration of Combustible Dusts*, 2003.

ASTM E 2019, *Standard Test Method for Minimum Ignition Energy of a Dust Cloud in Air*, 2003.

ASTM E 2021, *Standard Test Method for Hot-Surface Ignition Temperature of Dust Layers*, 2006.

ASTM E 2079, *Standard Test Methods for Limiting Oxygen (Oxidant) Concentration in Gases and Vapors*, 2007.

ASTM WK 1680, *Test Method for Limiting Oxygen (Oxidant) Concentration of Combustible Dust Clouds*, unpublished draft.

H.1.2.6 CEN Publications. European Committee for Standardization, 36 rue de Stassart, B-1050 Brussels, Belgium.

EN 12874:2001, *Flame Arresters— Performance Requirements, Test Methods and Limits for Use*, 2001.

EN 14034-4, *Determination of Explosion Characteristics of Dust Clouds*, Part 4: Determination of the Limiting Oxygen Concentration LOC of Dust Clouds, 2004.

EN ISO 16852, *Flame arresters— Performance requirements, test methods and limits for use*, ISO 16852:2008, including Cor 1:2008 and Cor 2:2009; German version EN ISO 16852:2010.

H.1.2.7 FM Global Publications. FM Global, 270 Central Avenue, P.O. Box 7500, Johnston, RI 02919.

FM Global Loss Prevention Data Sheet 7-76, "Prevention and Mitigation of Combustible Dust Explosions and Fire," January 2012.

H.1.2.8 IEC Publications. International Electrotechnical Commission, 3, rue de Varembé, P.O. Box 131, CH-1211 Geneva 20, Switzerland.

IEC 61511, *Functional Safety — Safety Instrumented Systems for the Process Industry Sector*, 2003.

H.1.2.9 Military Specifications. Department of Defense Single Stock Point, Document Automation and Production Service, Building 4/D, 700 Robbins Avenue, Philadelphia, PA 19111-5094.

MIL-B-87162A, Military Specification: Baffle Material, Explosion Suppression, Expanded Aluminum Mesh, for Aircraft Fuel Tanks, 1994.

MIL-C-5541, Chemical Conversion Coatings on Aluminum and Aluminum Alloys, 2006.

MIL-DTL-83054C, Detailed Specification Baffle and Inserting Material, Aircraft Fuel Tank, 2003.

MIL-PRF-87260A (USAF), Performance Specification, Foam Material, Explosion Suppression, Inherently Electrostatically Conductive, for Aircraft Fuel Tanks, 1998.

H.1.2.10 NOAA Publications. National Oceanic and Atmospheric Administration, (NOAA), 14th Street and Constitution Avenue, NW, Washington, DC 20230.

NOAA Reactivity Worksheet, April 2007.

Copyright 2014 National Fire Protection Association (NFPA). Licensed, by agreement, for individual use and download on October 4, 2014 to LEADER and READER for designated user PATTARAPORN SRITRAKOOL. No other reproduction or transmission in any form permitted without written permission of NFPA. For inquires or to report unauthorized use, contact licensing@nfpa.org.

H.1.2.11 SAE Publications. Society of Automotive Engineers, 400 Commonwealth Drive, Warrendale, PA 15096.

SAE AIR 4170A, Reticulated Polyurethane Foam Explosion Suppression Material for Fuel Systems and Dry Bays, 1998.

H.1.2.12 U.S. Government Publications. U.S. Government Printing Office, Washington, DC 20402.

Title 33, Code of Federal Regulations, Part 154.

H.1.2.13 Other Publications.

Bartknecht, W., *Explosions: Course, Prevention, Protection*, Springer-Verlag, Heidelberg, 1989.

Barton, J. (Editor), *Dust Explosion Prevention and Protection — A Practical Guide*. Gulf Professional Publishing, Houston, TX, 2002.

Britton, L. G., "Using Heats of Oxidation to Evaluate Flammability Hazards," *Process Safety Progress*, 20(1), 31–54, March 2002.

Chatrathi, K., and J. Going, "Pipe and Duct Deflagrations Associated with Incinerators," *Process Safety Progress*, 15(4), 237, 1996.

Chatrathi, K., J. Going, and W. Grandestaff, "Flame Propagation in Industrial Scale Piping," *Process Safety Progress*, 20(4), 286–294, 2001.

Coward, J. F., and G. W. Jones, "Limits of Flammability of Gases and Vapors," Bulletin 503, U.S. Bureau of Mines, Pittsburgh, PA, 1952.

Eckhoff, R. K., *Dust Explosions in the Process Industries*, Butterworth-Heinemann, Oxford, England, 2003.

Förster, H., Flame Arrester Testing and Qualification in Europe, Proceedings of the 10th International Symposium on Loss Prevention and Safety Promotion in the Process Industries, Stockholm, Sweden, 19–21 June 2001a.

Förster, H., Flame Arresters — The new standard and its consequences, Proceedings of the International ESMG Symposium, Part 2: Industrial Explosion Protection, Nürnberg, Germany, 27–29 March 2001b.

Förster, H., and C. Kersten, *Investigation of Deflagrations and Detonations in Pipes and Flame Arresters by High Speed Framing*, 4th International Symposium on Hazards, Prevention and Mitigation of Industrial Explosions, Bourges, France, 21–25 October 2002.

Green, D. W., and R. H. Perry, *Chemical Engineering Handbook*, 7th ed., Wiley, New York, 1997.

Grossel, S. S., *Detonation and Deflagration Flame Arresters*, Wiley, New York, May 2002.

Hattwig, M., and H. Steen, *Handbook of Explosion Prevention and Protection*, Wiley–VCH Verlag GmbH & Co., Weinheim, Germany, 2004.

Heidermann, T., and M. Davies, In-Line Flame Arrester Application Limits and Matrix Concept for Process Plant Safety from Flash Back of Thermal Combustion Units, Proceedings of the 40th Annual Loss Prevention Symposium, Global Congress on Process Safety AIChE Spring National Meeting, Orlando, FL, April 24–27, 2006.

Jo, Young-Do and K-S. Park, "Minimum Amount of Flammable Gas for Explosion within a Confined Space," *Process Safety Progress*, v 23, 2004.

Jones, G. W., M. G. Zabetakis, J. K. Richmond, G. S. Scott, and A. L. Furno, Research on the Flammability Characteristics of Aircraft Fuels, Wright Air Development Center, Wright-Patterson AFB, OH, Technical Report 52-35, Supplement I, 57 pp., 1954.

Ketchum, D. E., J. K. Thomas, and Q. A Baker, Loss of Inerting Due to Multiple Exhaust Vents, paper presented at the 39th Annual Loss Prevention Symposium, Atlanta, GA, April 10–15, 2005.

Kondo, S., K. Takizawa, A. Takahashi, and K. Tokuhashi, Extended Le Chatelier's formula and nitrogen dilution effect on the flammability limits," *Fire Safety Journal*, Elsevier, 41, 406–417, 2006.

Kondo, S., K. Takizawa, A. Takahashi, K. Tokuhashi, and A. Sekiya, "A study on flammability limits of fuel mixtures," *Journal of Hazardous Materials*, Elsevier, 155, 440–448, 2008.

Kuchta, J. M., Bulletin 680, U.S. Bureau of Mines, Pittsburgh, PA, 1985.

Kuchta, J. M., A. L. Furno, A. Bartkowiak, and G. H. Martindill, Effect of Pressure and Temperature on Flammability Limits of Chlorinated Combustibles in Oxygen-Nitrogen and Nitrogen Tetroxide-Nitrogen Atmospheres, *Journal of Chemical and Engineering Data*, Vol. 13, No. 3, p. 421, July 1968 (American Chemical Society, Washington, D.C.).

Ma, T., "A thermal theory for estimating the flammable limits of a mixture," *Fire Safety Journal*, Elsevier, 46, 558–567, 2011.

Moore, P., and D. Spring, Design of Explosion Isolation Barriers, IChemE Symposium Series No. 150, pp. 1–20, 2004.

Ogle, R., "Explosion Hazard Analysis for an Enclosure Partially Filled With a Flammable Gas," *Process Safety Progress*, v 18, 1999.

Roser, M., A. Vogl, S. Radandt, W. Malalasekera, and R. Parkin, "Investigations of Flame Front Propagation between Interconnected Process Vessels," *J Loss Prevention Process Industries*, 12 , 421–436, 1999.

Senecal, J.A., "Flame extinguishing in the cup-burner by inert gases," *Fire Safety Journal*, Elsevier, 40, 579–591, 2005.

Siwek, R., and P. E. Moore, "Design Practice for Extinguishing Barrier Systems," *Process Safety Progress*, 16(4), 219, 1997.

Szego, A., K. Premji, and R. Appleyard, Evaluation of Explosafe Explosion Suppression System for Aircraft Fuel Tank Protection, Air Force Report AFWAL-TR-2043, AD A093125, 1980.

Zabetakis, M. G., Flammability Characteristics of Combustible Gases and Vapors, Bulletin 627, U.S. Bureau of Mines, Pittsburgh, PA, 1965.

Zabetakis, M. G., and B. H. Rosen, Considerations Involved in Handling Kerosine, *Proceedings*, API, Vol. 37, Sec. III, 1957, p. 296.

H.2 Informational References. The following documents or portions thereof are listed here as informational resources only. They are not a part of the requirements of this document.

Aluminum Association, International Alloy Designations and Chemical Composition Limits for Wrought Aluminum and Wrought Aluminum Alloys, Alexandria, VA, April 2006,

Aluminum Association Standard H35.1, Alloy and Temper Designation System for Aluminum, Aluminum Association, Alexandria, VA, 2006.

Brenn- und Explosions-Kenngrossen von Stauben, Berufsgenossenschaftliches Institut fur Arbeitssicherheit (BIA) Bergbau-Versuchsstrecke, Institut fur Explosionsschutz und Sprengtechnik, Sonderdruck der sicherheitstechnischen.

Noronha, J. A., J. T. Merry, and W. C. Reid, Deflagration Pressure Containment for Vessel Safety Design, Plant/Operations Progress, Vol. 1, No. 1, American Institute of Chemical Engineers, New York, NY, January 1982.

Copyright 2014 National Fire Protection Association (NFPA). Licensed, by agreement, for individual use and download on October 4, 2014 to LEADER and READER for designated user PATTARAPORN SRITRAKOOL. No other reproduction or transmission in any form permitted without written permission of NFPA. For inquires or to report unauthorized use, contact licensing@nfpa.org.

Pineau, J. P., Mechanisms of the Propagation of Dust Explosions in Elongated Vessels, Seminar Course on Dust Explosion Venting, London, October 1987.

Schuber, G., Rotary Valves for Explosion Isolation: Approval Without Testing, European Information Centre for Explosion Protection–International Symposium, Antwerp, Belgium, September 1989.

VDI Richtlinie 3673, Verein Deutscher Ingenieure-Kommission Reinhalting der Luft, Dusseldorf, VDI Verlag GmbH, Dusseldorf, 1979 and 1983.

Zabetakis, M. G., *Gasfreeing of Cargo Tanks*, Information Circular 7994, U.S. Bureau of Mines, Pittsburgh, PA, 1961.

H.3 References for Extracts in Informational Sections. (Reserved)

Copyright 2014 National Fire Protection Association (NFPA). Licensed, by agreement, for individual use and download on October 4, 2014 to LEADER and READER for designated user PATTARAPORN SRITRAKOOL. No other reproduction or transmission in any form permitted without written permission of NFPA. For inquires or to report unauthorized use, contact licensing@nfpa.org.

Index

Copyright © 2013 National Fire Protection Association. All Rights Reserved.

The copyright in this index is separate and distinct from the copyright in the document that it indexes. The licensing provisions set forth for the document are not applicable to this index. This index may not be reproduced in whole or in part by any means without the express written permission of NFPA.

-A-

Administration ..... Chap. 1
Application 1.3
Equivalency 1.5
Purpose 1.2
Retroactivity 1.4
Scope 1.1
Approved
Definition 3.2.1, A.3.2.1
Authority Having Jurisdiction (AHJ)
Definition 3.2.2, A.3.2.2

-B-

Blanketing (or Padding)
Definition 3.3.1
Burning Velocity
Definition 3.3.2
Flame Burning Velocity
Definition 3.3.2.1
Fundamental Burning Velocity
Definition 3.3.2.2

-C-

Combustible
Definition 3.3.3
Combustible Dust
Definition 3.3.4, A.3.3.4
Combustible Particulate Solid
Definition 3.3.5, A.3.3.5
Combustion
Definition 3.3.6
Concentration Reduction
Combustible Concentration Reduction
Definition 3.3.7.1
Definition 3.3.7
Oxidant Concentration Reduction
Definition 3.3.7.2
Control of Flammable Gas Mixtures by Oxidant Concentration Reduction and Combustible Concentration Reduction ..... Annex B

-D-

Definitions ..... Chap. 3
Deflagration
Definition 3.3.8
Deflagration Containment Calculation Method for Two Interconnected Vessels ..... Annex G
Deflagration Control by Active Isolation ..... Chap. 11
Application 11.1
Basic Design and Operation 11.4
Installation, Inspection, and Maintenance 11.4.5
Process Shutdown 11.4.4
Protection System Design and Operation 11.4.2
Inspection 11.4.2.5
Maintenance 11.4.2.4
Management of Change 11.4.2.6
System Design Certification 11.4.1
Actuated Float Valve 11.4.1.5
Actuated Pinch Valve 11.4.1.6
Chemical (Barrier) Isolation 11.4.1.3
Mechanical Isolation 11.4.1.4
System Manufacturer's Additional Responsibilities 11.4.3, A.11.4.3
Control Panels 11.7
Detection Devices 11.5
Electrically Operated Actuating Devices 11.6
Isolation Techniques 11.2, A.11.2
Actuated Pinch Valve 11.2.4
Limitations 11.2.4.5
Chemical Barrier 11.2.1
Extinguishing Agents and Containers 11.2.1.4
Limitations 11.2.1.5
Externally Actuated Float Valve 11.2.3
Limitations 11.2.3.5
Fast-Acting Mechanical Valves 11.2.2, A.11.2.2
Limitations 11.2.2.4
Personnel Safety 11.3
Disarming and Lockout/Tagout Procedures 11.3.2, A.11.3.2
Deflagration Control by Passive Isolation ..... Chap. 12
Application 12.1, A.12.1
Passive Isolation Techniques 12.2
Flame Front Diverters 12.2.1, A.12.2.1
Basic System Design Considerations 12.2.1.2
Different Types of Flame Front Diverters 12.2.1.1, A.12.2.1.1
Flame Front Diverter Application Limits 12.2.1.5
Flame Front Diverter Design Requirements 12.2.1.3
System Certification 12.2.1.4
Flow-Actuated Flap Valve 12.2.3
Flow-Actuated Flap Valve Application Limits 12.2.3.6
Flow-Actuated Flap Valve Design 12.2.3.3
Flow-Actuated Flap Valve Design Criteria 12.2.3.4
System Certification 12.2.3.5
Flow-Actuated Float Valve 12.2.2, A.12.2.2
Float Valve Application Limits 12.2.2.4, A.12.2.2.4
Float Valve Design Criteria 12.2.2.2
Flow-Actuated Float Valve Design 12.2.2.1, A.12.2.2.1
System Certification 12.2.2.3
Hydraulic (Liquid Seal)–Type Deflagration Arresters 12.2.6, A.12.2.6
Hydraulic (Liquid Seal)–Type Deflagration Arrester Designs 12.2.6.1, A.12.2.6.1
Hydraulic (Liquid Seal)–Type Deflagration Arrester Application Limits 12.2.6.5
Hydraulic (Liquid Seal) Flame Arrester Design Criteria 12.2.6.3
Inspection 12.2.6.3.9
Hydraulic (Liquid Seal) Flame Arrester System Design Considerations 12.2.6.2
System Verification 12.2.6.4
Liquid Product Flame Arrester 12.2.7, A.12.2.7
Liquid Product Flame Arrester Application Limits 12.2.7.5
Liquid Product Flame Arrester Design Criteria 12.2.7.3
Inspection 12.2.7.3.7
Liquid Product Flame Arrester System Design Considerations 12.2.7.2
Liquid-Type Flame Arrester Design 12.2.7.1, A.12.2.7.1
System Verification 12.2.7.4
Material Chokes (Rotary Valves) 12.2.4, A.12.2.4
Close-Clearance Rotary Valves 12.2.4.5, A.12.2.4.5
Rotary Valve Application Limits 12.2.4.6
Rotary Valve Design Criteria 12.2.4.2
Rotary Valve System Design Considerations 12.2.4.1, A.12.2.4.1
Rotary Valve with Material Blocking 12.2.4.4, A.12.2.4.4

Copyright 2014 National Fire Protection Association (NFPA). Licensed, by agreement, for individual use and download on October 4, 2014 to LEADER and READER for designated user PATTARAPORN SRITRAKOOL. No other reproduction or transmission in any form permitted without written permission of NFPA. For inquires or to report unauthorized use, contact licensing@nfpa.org.

Static Dry Flame Arresters 12.2.5, A.12.2.5
General Application 12.2.5.1
Static Dry Flame Arrester Application Limits 12.2.5.6
Static Dry Flame Arrester Design Criteria 12.2.5.4, A.12.2.5.4
Inspection 12.2.5.4.14
Static Dry Flame Arrester Designs 12.2.5.2, A.12.2.5.2
Static Flame Arrester System Design Considerations 12.2.5.3
System Verification 12.2.5.5
Deflagration Control by Pressure Containment ..... Chap. 13
Application 13.1
Design Bases 13.3
Design Limitations 13.2
Inspection After a Deflagration 13.6
Maintenance 13.4
Threaded Fasteners 13.5
Deflagration Control by Suppression ..... Chap. 10
Application 10.1, A.10.1
Basic Design Considerations 10.4
Actuation of Other Devices and Systems 10.4.5
General 10.4.1
Process Shutdown 10.4.6
Suppression System Design and Operation 10.4.3
Maintenance and Inspection 10.4.3.4
Management of Change 10.4.3.5
Process Analysis 10.4.3.1
System Design Certification 10.4.2
System Manufacturer's Additional Responsibilities 10.4.4
Control Panels 10.5
Detection Devices 10.6
Electrically Operated Actuating Devices 10.7
Limitations 10.2
Personnel Safety 10.3
Disarming and Lockout and Tagout Procedures 10.3.1, A.10.3.1
Warning Signs 10.3.2
Suppressant and Suppressant Storage Containers 10.8, A.10.8
Deflagration Pressure Containment
Definition 3.3.9
Deflagration Prevention by Combustible Concentration Reduction ..... Chap. 8
Application 8.1, A.8.1
Basic Design Considerations 8.2
Protection System Design and Operation 8.2.3
Management of Change 8.2.3.7
Design and Operating Requirements 8.3
Catalytic Oxidation 8.3.2, A.8.3.2
Combustible Concentration Limit 8.3.1, A.8.3.1
Ventilation or Air Dilution 8.3.3
Instrumentation 8.4
Deflagration Prevention by Oxidant Concentration Reduction ..... Chap. 7
Application 7.1
Warning Signs 7.1.4
Application of Purge Gas at Points of Use 7.6
Design and Operating Requirements 7.2
Design Considerations 7.2.1, A.7.2.1
Limiting Oxidant Concentrations (LOCs) 7.2.3
Protection System Design and Operation 7.2.2
Management of Change 7.2.2.7
Use of Purge Gas Systems 7.2.4
Instrumentation 7.7
General 7.7.1, A.7.7.1
Systems Operated Above the Upper Flammable Limit (UFL) 7.7.3
Systems Operated Below the Limiting Oxidant Concentration (LOC) 7.7.2
Piping Systems 7.5
Purge Gas Conditioning 7.4
Purge Gas Sources 7.3
Deflagration Suppression
Definition 3.3.10
Detonation
Definition 3.3.11

-E-

Enclosure
Definition 3.3.12
Enclosure Strength (Pes)
Definition 3.3.13
Explanatory Material ..... Annex A
Explosion
Definition 3.3.14

-F-

Fast-Acting Valve
Definition 3.3.15
Flame Arrester
Definition 3.3.16, A.3.3.16
Flame Arresters ..... Annex F
Flame Front Diverter
Definition 3.3.17
Flame Speed
Definition 3.3.18
Flammable Limits
Definition 3.3.19, A.3.3.19
Lower Flammable Limit (LFL)
Definition 3.3.19.1
Upper Flammable Limit (UFL)
Definition 3.3.19.2
Flammable Range
Definition 3.3.20

-G-

Gas
Definition 3.3.21
Inert Gas
Definition 3.3.21.1
Purge Gas
Definition 3.3.21.2
General Prescriptive Requirements ..... Chap. 6
Factors to Be Considered 6.3
Housekeeping 6.7
Inspection and Maintenance 6.6, A.6.6
Limitations 6.2
Methods 6.1, A.6.1
Methods Based on the Prevention of Combustion 6.1.1
Methods Based on the Prevention or Limitation of Damage 6.1.2
Plans 6.4
System Acceptance 6.5
General Requirements ..... Chap. 4
Compliance Options 4.3
Options 4.3.1
Performance-Based Design 4.3.2
Prescriptive-Based Design 4.3.3
Goal 4.1
Objectives 4.2
Hazard Analysis 4.2.3
Life Safety 4.2.1
Property Protection 4.2.2

-H-

Hybrid Mixture
Definition 3.3.22, A.3.3.22

-I-

Inerting
Definition 3.3.23
Informational References ..... Annex H

Copyright 2014 National Fire Protection Association (NFPA). Licensed, by agreement, for individual use and download on October 4, 2014 to LEADER and READER for designated user PATTARAPORN SRITRAKOOL. No other reproduction or transmission in any form permitted without written permission of NFPA. For inquires or to report unauthorized use, contact licensing@nfpa.org.

Installation, Inspection, and Maintenance of Explosion Prevention Systems ..... Chap. 15
Agent, Agent Storage Containers, Automatic Fast-Acting Valves, Flame Arresters, and Flame Front Diverters 15.4
Electrical Installation 15.5
Wiring 15.5.6
General 15.1
Inspection 15.7
Installation 15.2
Design and Submittal Documentation 15.2.1
Maintenance 15.12
Management of Change 15.11
Mechanical Installation 15.3
Personnel Safety and Training 15.10
Procedures Following System Actuation 15.8
Recordkeeping 15.9
System Acceptance 15.6
Isolation
Chemical Isolation
Definition 3.3.24.1
Definition 3.3.24, A.3.3.24
Deflagration Isolation
Definition 3.3.24.2
Flow Isolation
Definition 3.3.24.3
Ignition Source Isolation
Definition 3.3.24.4

-L-

Labeled
Definition 3.2.3
Limiting Oxidant Concentration (LOC)
Definition 3.3.25, A.3.3.25
Limiting Oxidant Concentrations ..... Annex C
Liquid Seal
Definition 3.3.26
Listed
Definition 3.2.4, A.3.2.4

-M-

Maximum Experimental Safe Gap (MESG)
Definition 3.3.27
Maximum Pressure (Pmax)
Definition 3.3.28
Mist
Definition 3.3.29

-O-

Oxidant
Definition 3.3.30

-P-

Padding
Definition 3.3.31
Passive Explosion Suppression Using Expanded Metal Mesh or Polymer Foams ..... Chap. 14
Applications 14.1, A.14.1
Expanded Metal Mesh and Polymer Foam Explosion Suppression Testing 14.3
Double Void Explosion Suppression Tests 14.3.7, A.14.3.7
Single Void Explosion Suppression Tests 14.3.6
Expanded Metal Mesh or Polymer Foam Installations 14.4
Expanded Metal Mesh or Polymer Foam Maintenance and Replacement 14.5
Inspection 14.5.1
Foam and Mesh Requirements 14.2
Expanded Metal Mesh Requirements 14.2.4
Pore Size 14.2.4.3, A.14.2.4.3
Polymer Foam Requirements 14.2.5, A.14.2.5
Electrical Resistivity 14.2.5.5
Tensile Strength Specifications 14.2.5.4
Performance-Based Design Option ..... Chap. 5
General Requirements 5.1
Design Documentation 5.1.2
Management of Change 5.1.3
Qualifications 5.1.1
Performance Criteria 5.2
Deflagration Prevention and Control 5.2.3
Inspection and Maintenance 5.2.4
Predeflagration Detection and Control of Ignition Sources ..... Chap. 9
Actuation of Other Devices and Systems 9.7
Application 9.1, A.9.1
Limitations 9.2
Optical Sensing System and Gas Sensing System Design Considerations 9.3
Gas Sensing Equipment 9.3.3
General 9.3.1
Optical Sensing Equipment 9.3.2
Power and Control Units 9.3.4
Process Shutdown 9.8
Protection System Design and Operation 9.5
Maintenance and Inspection 9.5.5
Management of Change 9.5.6
Process Analysis 9.5.1
System Manufacturer's Additional Responsibilities 9.6
Testing 9.4
Pressure Piling
Definition 3.3.32
Purging Methods ..... Annex E

-Q-

Qualified Person
Definition 3.3.33

-R-

Reduced Pressure (Pred)
Definition 3.3.34, A.3.3.34
Referenced Publications ..... Chap. 2
General 2.1
NFPA Publications 2.2
Other Publications 2.3
References for Extracts in Mandatory Sections 2.4

-S-

Self-Decomposing Mixtures
Definition 3.3.35, A.3.3.35
Shall
Definition 3.2.5
Should
Definition 3.2.6
Spark Extinguishing System
Definition 3.3.36
Standard
Definition 3.2.7
Suppressant
Definition 3.3.37
System Acceptance
Definition 3.3.38

-T-

Trouble Signal
Definition 3.3.39
Trouble Condition
Definition 3.3.39.1

-V-

Vapor
Definition 3.3.40
Ventilation
Definition 3.3.41
Ventilation Calculations ..... Annex D

Copyright 2014 National Fire Protection Association (NFPA). Licensed, by agreement, for individual use and download on October 4, 2014 to LEADER and READER for designated user PATTARAPORN SRITRAKOOL. No other reproduction or transmission in any form permitted without written permission of NFPA. For inquires or to report unauthorized use, contact licensing@nfpa.org.

Sequence of Events for the Standards Development Process

As soon as the current edition is published, a Standard is open for Public Input

Step 1: Input Stage

- Input accepted from the public or other committees for consideration to develop the First Draft
- Committee holds First Draft Meeting to revise Standard (23 weeks)
  Committee(s) with Correlating Committee (10 weeks)
- Committee ballots on First Draft (12 weeks)
  Committee(s) with Correlating Committee (11 weeks)
- Correlating Committee First Draft Meeting (9 weeks)
- Correlating Committee ballots on First Draft (5 weeks)
- First Draft Report posted

Step 2: Comment Stage

- Public Comments accepted on First Draft (10 weeks)
- If Standard does not receive Public Comments and the Committee does not wish to further revise the Standard, the Standard becomes a Consent Standard and is sent directly to the Standards Council for issuance
- Committee holds Second Draft Meeting (21 weeks)
  Committee(s) with Correlating Committee (7 weeks)
- Committee ballots on Second Draft (11 weeks)
  Committee(s) with Correlating Committee (10 weeks)
- Correlating Committee First Draft Meeting (9 weeks)
- Correlating Committee ballots on First Draft (8 weeks)
- Second Draft Report posted

Step 3: Association Technical Meeting

- Notice of Intent to Make a Motion (NITMAM) accepted (5 weeks)
- NITMAMs are reviewed and valid motions are certified for presentation at the Association Technical Meeting
- Consent Standard bypasses Association Technical Meeting and proceeds directly to the Standards Council for issuance
- NFPA membership meets each June at the Association Technical Meeting and acts on Standards with "Certified Amending Motions" (certified NITMAMs)
- Committee(s) and Panel(s) vote on any successful amendments to the Technical Committee Reports made by the NFPA membership at the Association Technical Meeting

Step 4: Council Appeals and Issuance of Standard

- Notification of intent to file an appeal to the Standards Council on Association action must be filed within 20 days of the Association Technical Meeting
- Standards Council decides, based on all evidence, whether or not to issue the Standards or to take other action

Committee Membership Classifications[1,2,3,4]

The following classifications apply to Committee members and represent their principal interest in the activity of the Committee.

1. M *Manufacturer:* A representative of a maker or marketer of a product, assembly, or system, or portion thereof, that is affected by the standard.
2. U *User:* A representative of an entity that is subject to the provisions of the standard or that voluntarily uses the standard.
3. IM *Installer/Maintainer:* A representative of an entity that is in the business of installing or maintaining a product, assembly, or system affected by the standard.
4. L *Labor:* A labor representative or employee concerned with safety in the workplace.
5. RT *Applied Research/Testing Laboratory:* A representative of an independent testing laboratory or independent applied research organization that promulgates and/or enforces standards.
6. E *Enforcing Authority:* A representative of an agency or an organization that promulgates and/or enforces standards.
7. I *Insurance:* A representative of an insurance company, broker, agent, bureau, or inspection agency.
8. C *Consumer:* A person who is or represents the ultimate purchaser of a product, system, or service affected by the standard, but who is not included in (2).
9. SE *Special Expert:* A person not representing (1) through (8) and who has special expertise in the scope of the standard or portion thereof.

NOTE 1: "Standard" connotes code, standard, recommended practice, or guide.

NOTE 2: A representative includes an employee.

NOTE 3: While these classifications will be used by the Standards Council to achieve a balance for Technical Committees, the Standards Council may determine that new classifications of member or unique interests need representation in order to foster the best possible Committee deliberations on any project. In this connection, the Standards Council may make such appointments as it deems appropriate in the public interest, such as the classification of "Utilities" in the National Electrical Code Committee.

NOTE 4: Representatives of subsidiaries of any group are generally considered to have the same classification as the parent organization.

Copyright 2014 National Fire Protection Association (NFPA). Licensed, by agreement, for individual use and download on October 4, 2014 to LEADER and READER for designated user PATTARAPORN SRITRAKOOL. No other reproduction or transmission in any form permitted without written permission of NFPA. For inquires or to report unauthorized use, contact licensing@nfpa.org.

Submitting Public Input / Public Comment through the Electronic Submission System (e-Submission):

As soon as the current edition is published, a Standard is open for Public Input.

Before accessing the e-Submission System, you must first sign-in at www.NFPA.org. *Note: You will be asked to sign-in or create a free online account with NFPA before using this system*:

a. Click in the gray Sign In box on the upper left side of the page. Once signed-in, you will see a red "Welcome" message in the top right corner.
b. Under the Codes and Standards heading, Click on the Document Information pages (List of Codes & Standards), and then select your document from the list or use one of the search features in the upper right gray box.

OR

a. Go directly to your specific document page by typing the convenient short link of www.nfpa.org/document#, (Example: NFPA 921 would be www.nfpa.org/921) Click in the gray Sign In box on the upper left side of the page. Once signed in, you will see a red "Welcome" message in the top right corner.

To begin your Public Input, select the link The next edition of this standard is now open for Public Input (formally "proposals") located on the Document Information tab, the Next Edition tab, or the right-hand Navigation bar. Alternatively, the Next Edition tab includes a link to Submit Public Input online

At this point, the NFPA Standards Development Site will open showing details for the document you have selected. This "Document Home" page site includes an explanatory introduction, information on the current document phase and closing date, a left-hand navigation panel that includes useful links, a document Table of Contents, and icons at the top you can click for Help when using the site. The Help icons and navigation panel will be visible except when you are actually in the process of creating a Public Input.

Once the First Draft Report becomes available there is a Public comment period during which anyone may submit a Public Comment on the First Draft. Any objections or further related changes to the content of the First Draft must be submitted at the Comment stage.

To submit a Public Comment you may access the e-Submission System utilizing the same steps as previous explained for the submission of Public Input.

For further information on submitting public input and public comments, go to: http://www.nfpa.org/publicinput

Other Resources available on the Doc Info Pages

Document information tab: Research current and previous edition information on a Standard

Next edition tab: Follow the committee's progress in the processing of a Standard in its next revision cycle.

Technical committee tab: View current committee member rosters or apply to a committee

Technical questions tab: For members and Public Sector Officials/AHJs to submit questions about codes and standards to NFPA staff. Our Technical Questions Service provides a convenient way to receive timely and consistent technical assistance when you need to know more about NFPA codes and standards relevant to your work. Responses are provided by NFPA staff on an informal basis.

Products/training tab: List of NFPA's publications and training available for purchase.

Community tab: Information and discussions about a Standard

Copyright 2014 National Fire Protection Association (NFPA). Licensed, by agreement, for individual use and download on October 4, 2014 to LEADER and READER for designated user PATTARAPORN SRITRAKOOL. No other reproduction or transmission in any form permitted without written permission of NFPA. For inquires or to report unauthorized use, contact licensing@nfpa.org.

Information on the NFPA Standards Development Process

I. Applicable Regulations. The primary rules governing the processing of NFPA standards (codes, standards, recommended practices, and guides) are the NFPA *Regulations Governing the Development of NFPA Standards (Regs)*. Other applicable rules include NFPA *Bylaws*, NFPA *Technical Meeting Convention Rules*, NFPA *Guide for the Conduct of Participants in the NFPA Standards Development Process*, and the NFPA *Regulations Governing Petitions to the Board of Directors from Decisions of the Standards Council*. Most of these rules and regulations are contained in the *NFPA Standards Directory*. For copies of the *Directory*, contact Codes and Standards Administration at NFPA Headquarters; all these documents are also available on the NFPA website at "www.nfpa.org."

The following is general information on the NFPA process. All participants, however, should refer to the actual rules and regulations for a full understanding of this process and for the criteria that govern participation.

II. Technical Committee Report. The Technical Committee Report is defined as "the Report of the responsible Committee(s), in accordance with the Regulations, in preparation of a new or revised NFPA Standard." The Technical Committee Report is in two parts and consists of the First Draft Report and the Second Draft Report. (See *Regs* at 1.4)

III. Step 1: First Draft Report. The First Draft Report is defined as "Part one of the Technical Committee Report, which documents the Input Stage." The First Draft Report consists of the First Draft, Public Input, Committee Input, Committee and Correlating Committee Statements, Correlating Input, Correlating Notes, and Ballot Statements. (See *Regs* at 4.2.5.2 and Section 4.3) Any objection to an action in the First Draft Report must be raised through the filing of an appropriate Comment for consideration in the Second Draft Report or the objection will be considered resolved. [See *Regs* at 4.3.1(b)]

IV. Step 2: Second Draft Report. The Second Draft Report is defined as "Part two of the Technical Committee Report, which documents the Comment Stage." The Second Draft Report consists of the Second Draft, Public Comments with corresponding Committee Actions and Committee Statements, Correlating Notes and their respective Committee Statements, Committee Comments, Correlating Revisions, and Ballot Statements. (See *Regs* at Section 4.2.5.2 and 4.4) The First Draft Report and the Second Draft Report together constitute the Technical Committee Report. Any outstanding objection following the Second Draft Report must be raised through an appropriate Amending Motion at the Association Technical Meeting or the objection will be considered resolved. [See *Regs* at 4.4.1(b)]

V. Step 3a: Action at Association Technical Meeting. Following the publication of the Second Draft Report, there is a period during which those wishing to make proper Amending Motions on the Technical Committee Reports must signal their intention by submitting a Notice of Intent to Make a Motion. (See *Regs* at 4.5.2) Standards that receive notice of proper Amending Motions (Certified Amending Motions) will be presented for action at the annual June Association Technical Meeting. At the meeting, the NFPA membership can consider and act on these Certified Amending Motions as well as Follow-up Amending Motions, that is, motions that become necessary as a result of a previous successful Amending Motion. (See 4.5.3.2 through 4.5.3.6 and Table1, Columns 1-3 of *Regs* for a summary of the available Amending Motions and who may make them.) Any outstanding objection following action at an Association Technical Meeting (and any further Technical Committee consideration following successful Amending Motions, see *Regs* at 4.5.3.7 through 4.6.5.3) must be raised through an appeal to the Standards Council or it will be considered to be resolved.

VI. Step 3b: Documents Forwarded Directly to the Council. Where no Notice of Intent to Make a Motion (NITMAM) is received and certified in accordance with the Technical Meeting Convention Rules, the standard is forwarded directly to the Standards Council for action on issuance. Objections are deemed to be resolved for these documents. (See *Regs* at 4.5.2.5)

VII. Step 4a: Council Appeals. Anyone can appeal to the Standards Council concerning procedural or substantive matters related to the development, content, or issuance of any document of the Association or on matters within the purview of the authority of the Council, as established by the *Bylaws* and as determined by the Board of Directors. Such appeals must be in written form and filed with the Secretary of the Standards Council (See *Regs* at 1.6). Time constraints for filing an appeal must be in accordance with 1.6.2 of the *Regs*. Objections are deemed to be resolved if not pursued at this level.

VIII. Step 4b: Document Issuance. The Standards Council is the issuer of all documents (see Article 8 of *Bylaws*). The Council acts on the issuance of a document presented for action at an Association Technical Meeting within 75 days from the date of the recommendation from the Association Technical Meeting, unless this period is extended by the Council (See *Regs at* 4.7.2). For documents forwarded directly to the Standards Council, the Council acts on the issuance of the document at its next scheduled meeting, or at such other meeting as the Council may determine (See *Regs* at 4.5.2.5 and 4.7.4).

IX. Petitions to the Board of Directors. The Standards Council has been delegated the responsibility for the administration of the codes and standards development process and the issuance of documents. However, where extraordinary circumstances requiring the intervention of the Board of Directors exist, the Board of Directors may take any action necessary to fulfill its obligations to preserve the integrity of the codes and standards development process and to protect the interests of the Association. The rules for petitioning the Board of Directors can be found in the *Regulations Governing Petitions to the Board of Directors from Decisions of the Standards Council* and in 1.7 of the *Regs*.

X. For More Information. The program for the Association Technical Meeting (as well as the NFPA website as information becomes available) should be consulted for the date on which each report scheduled for consideration at the meeting will be presented. For copies of the First Draft Report and Second Draft Report as well as more information on NFPA rules and for up-to-date information on schedules and deadlines for processing NFPA documents, check the NFPA website (www.nfpa.org/aboutthecodes) or contact NFPA Codes & Standards Administration at (617) 984-7246.

Copyright 2014 National Fire Protection Association (NFPA). Licensed, by agreement, for individual use and download on October 4, 2014 to LEADER and READER for designated user PATTARAPORN SRITRAKOOL. No other reproduction or transmission in any form permitted without written permission of NFPA. For inquires or to report unauthorized use, contact licensing@nfpa.org.

Stay Up-To-Date. Join NFPA® Today!

☑ **YES** Please enroll me as a member of NFPA for the term checked below. Activate all benefits, and ship my *Member Kit* including the *Benefits Guide* and other resources to help me make the most of my NFPA membership.

Please allow three to four weeks for the kit to arrive.

Billing Information:

Name _____ Title _____

Organization _____

Address _____

City _____ State _____ Zip/Postal Code _____

Country _____

Phone _____ E-mail _____

Priority Code: 8J-MIS-1Z

Please Answer The Following Questions:

Job Title *(check one)*

- ❑ Architect, Engineer, Consultant, Contractor (C17)
- ❑ Facilities Safety Officer (F14)
- ❑ Fire Chief, Other Fire Service (A11)
- ❑ Loss Control, Risk Manager (L11)
- ❑ Inspector, Building Official, Fire Marshal (F03)
- ❑ Owner, President, Manager, Administrator (C10)
- ❑ Other (please specify): (G11)_____

Type of Organization *(check one)*

- ❑ Architecture, Engineering, Contracting (A14)
- ❑ Commercial Firm (Office, Retail, Lodging, Restaurant) (G13)
- ❑ Electrical Services, Installation (J11)
- ❑ Fire Service, Public and Private (AA1)
- ❑ Government (C12)
- ❑ Industrial Firm (Factory, Warehouse) (C11)
- ❑ Institutional (Health Care, Education, Detention, Museums) (B11)
- ❑ Insurance, Risk Management (B12)
- ❑ Utilities (G12)
- ❑ Other (please specify): (G11)_____

4 Easy Ways to Join

Fax: 1-800-593-6372, Outside the U.S. +1-508-895-8301
Mail: NFPA Membership Services Center,
11 Tracy Drive, Avon, MA 02322-9908
Online: nfpa.org
Call: 1-800-344-3555
Outside the U.S. call +1-617-770-3000

05/13-D

Terms and Payment:

- ❑ 1 year ($165)
- ❑ 2 years ($300) SAVE $30
- ❑ 3 years ($430) SAVE $65

Annual membership dues include a $45 subscription to *NFPA Journal*®. Regular membership in NFPA is individual and non-transferable. NFPA Journal is a registered trademark of the National Fire Protection Association, Quincy, MA 02169. Voting privileges begin after 180 days of individual membership. Prices subject to change.

Payment Method:

Check One:

- ❑ Payment Enclosed *(Make check payable to NFPA.)*
- ❑ Purchase Order *(Please attach this form to your P.O.)*
- ❑ Bill Me Later *(Not available on International memberships.)*

Charge My: ❑ VISA ❑ MasterCard ❑ AmEx ❑ Discover

Card #_____

Expiration Date _____

Name on Card _____

Signature _____

International members: Please note prepayment is required on all International orders. Be sure to enclose a check or select your preferred credit card option.

100% Money-Back Guarantee

If anytime during your first year you decide membership is not for you, let us know and you'll receive a 100% refund of your dues.

Copyright 2014 National Fire Protection Association (NFPA). Licensed, by agreement, for individual use and download on October 4, 2014 to LEADER and READER for designated user PATTARAPORN SRITRAKOOL. No other reproduction or transmission in any form permitted without written permission of NFPA. For inquires or to report unauthorized use, contact licensing@nfpa.org.

"Member-Only" Benefits
Keeps You Up-To-Date!

FREE! Technical Support — Technical Support by Phone/Email. Get fast, reliable answers to all code-related questions—from electrical safety for employee workplaces to carbon dioxide extinguishing systems—from NFPA's team of fire protection specialists.

NFPA Journal® — THE journal of record for fire protection, this bi-monthly publication will keep you abreast of the latest fire prevention and safety practices, as well as new technologies and strategies for protecting life and property from fire.

NFPA Update — This easy-to-read monthly e-newsletter will keep you up-to-date on important association programs such as the annual meeting; bring you times of interest from NFPA's regional offices; and alert you to nationwide events and opportunities you won't want to miss.

NFPA News — From new standards for dry cleaning plants to warning equipment for household carbon monoxide, this monthly online update keeps you abreast of additions of changes that could impact how you do you work.

NFPA Standards Directory — The NFPA Standards Directory is your complete guide to NFPA's code-making process. Simply access your online NFPA member profile for document revision guidelines, the revision cycle schedule, and forms for submitting Proposals and Comments. Your online NFPA member profile and access to the NFPA Standards Directory is automatically generated once you join NFPA.

FREE! Section Membership — Share YOUR expertise with others in any of 16 industry-specific sections covering your own field of interest.

Member Kit — Includes Membership Certificate, Pin, Decals, ID Card, and Camera-ready Logo Art. Display the NFPA member logo proudly on your business correspondence, literature, website, and vehicles.

10% Discounts — Save hundreds of dollars each year on the many products and services listed in the NFPA Catalog, including codes and standards publications, handbooks, training videos, and other education materials to increase your knowledge and skills.

Voting Rights — Your chance to help shape the future direction of fire prevention codes and standards. Voting rights go into effect 180 days from the start of individual membership.

Conference Invitation— Invitation to the NFPA Conference and Expo. Attend this important meeting at discounted rates as a member of NFPA.

Join NFPA today!
www.nfpa.org

NFPA® and *NFPA Journal*® are registered trademarks of the National Fire Protection Association, Quincy, MA 02169-7471