Copyright 2014 National Fire Protection Association (NFPA). Licensed, by agreement, for individual use and download on October 4, 2014 to LEADER and READER for designated user PATTARAPORN SRITRAKOOL. No other reproduction or transmission in any form permitted without written permission of NFPA. For inquires or to report unauthorized use, contact licensing@nfpa.org.

NFPA® 68

Standard on Explosion Protection by Deflagration Venting

2013 Edition



NFPA, 1 Batterymarch Park, Quincy, MA 02169-7471
An International Codes and Standards Organization

Copyright 2014 National Fire Protection Association (NFPA). Licensed, by agreement, for individual use and download on October 4, 2014 to LEADER and READER for designated user PATTARAPORN SRITRAKOOL. No other reproduction or transmission in any form permitted without written permission of NFPA. For inquires or to report unauthorized use, contact licensing@nfpa.org.

IMPORTANT NOTICES AND DISCLAIMERS CONCERNING NFPA® DOCUMENTS
NOTICE AND DISCLAIMER OF LIABILITY CONCERNING THE USE OF NFPA DOCUMENTS

NFPA® codes, standards, recommended practices, and guides ("NFPA Documents"), of which the document contained herein is one, are developed through a consensus standards development process approved by the American National Standards Institute. This process brings together volunteers representing varied viewpoints and interests to achieve consensus on fire and other safety issues. While the NFPA administers the process and establishes rules to promote fairness in the development of consensus, it does not independently test, evaluate, or verify the accuracy of any information or the soundness of any judgments contained in NFPA Documents.

The NFPA disclaims liability for any personal injury, property or other damages of any nature whatsoever, whether special, indirect, consequential or compensatory, directly or indirectly resulting from the publication, use of, or reliance on NFPA Documents. The NFPA also makes no guaranty or warranty as to the accuracy or completeness of any information published herein.

In issuing and making NFPA Documents available, the NFPA is not undertaking to render professional or other services for or on behalf of any person or entity. Nor is the NFPA undertaking to perform any duty owed by any person or entity to someone else. Anyone using this document should rely on his or her own independent judgment or, as appropriate, seek the advice of a competent professional in determining the exercise of reasonable care in any given circumstances.

The NFPA has no power, nor does it undertake, to police or enforce compliance with the contents of NFPA Documents. Nor does the NFPA list, certify, test, or inspect products, designs, or installations for compliance with this document. Any certification or other statement of compliance with the requirements of this document shall not be attributable to the NFPA and is solely the responsibility of the certifier or maker of the statement.

REMINDER: UPDATING OF NFPA DOCUMENTS

Users of NFPA codes, standards, recommended practices, and guides ("NFPA Documents") should be aware that NFPA Documents may be amended from time to time through the issuance of Tentative Interim Amendments or corrected by Errata. An official NFPA Document at any point in time consists of the current edition of the document together with any Tentative Interim Amendment and any Errata then in effect.

In order to determine whether an NFPA Document has been amended through the issuance of Tentative Interim Amendments or corrected by Errata, visit the Document Information Pages on NFPA's website. The Document Information Pages provide up-to-date, document specific information including any issued Tentative Interim Amendments and Errata.

To access the Document Information Page for a specific NFPA Document go to http://www.nfpa.org/document for a list of NFPA Documents, and click on the appropriate Document number (e.g., NFPA 101). In addition to posting all existing Tentative Interim Amendments and Errata, the Document Information Page also includes the option to sign-up for an "Alert" feature to receive an email notification when new updates and other information are posted regarding the document.

ISBN: 978-145590577-5 (Print)
ISBN: 978-145590622-2 (PDF)

Copyright 2014 National Fire Protection Association (NFPA). Licensed, by agreement, for individual use and download on October 4, 2014 to LEADER and READER for designated user PATTARAPORN SRITRAKOOL. No other reproduction or transmission in any form permitted without written permission of NFPA. For inquires or to report unauthorized use, contact licensing@nfpa.org.

IMPORTANT NOTICES AND DISCLAIMERS CONCERNING NFPA® DOCUMENTS

ADDITIONAL NOTICES AND DISCLAIMERS

Updating of NFPA Documents

Users of NFPA codes, standards, recommended practices, and guides ("NFPA Documents") should be aware that these documents may be superseded at any time by the issuance of new editions or may be amended from time to time through the issuance of Tentative Interim Amendments. An official NFPA Document at any point in time consists of the current edition of the document together with any Tentative Interim Amendments and any Errata then in effect. In order to determine whether a given document is the current edition and whether it has been amended through the issuance of Tentative Interim Amendments or corrected through the issuance of Errata, consult appropriate NFPA publications such as the National Fire Codes® Subscription Service, visit the NFPA website at www.nfpa.org, or contact the NFPA at the address listed below.

Interpretations of NFPA Documents

A statement, written or oral, that is not processed in accordance with Section 6 of the Regulations Governing Committee Projects shall not be considered the official position of NFPA or any of its Committees and shall not be considered to be, nor be relied upon as, a Formal Interpretation.

Patents

The NFPA does not take any position with respect to the validity of any patent rights referenced in, related to, or asserted in connection with an NFPA Document. The users of NFPA Documents bear the sole responsibility for determining the validity of any such patent rights, as well as the risk of infringement of such rights, and the NFPA disclaims liability for the infringement of any patent resulting from the use of or reliance on NFPA Documents.

NFPA adheres to the policy of the American National Standards Institute (ANSI) regarding the inclusion of patents in American National Standards ("the ANSI Patent Policy"), and hereby gives the following notice pursuant to that policy:

NOTICE: The user's attention is called to the possibility that compliance with an NFPA Document may require use of an invention covered by patent rights. NFPA takes no position as to the validity of any such patent rights or as to whether such patent rights constitute or include essential patent claims under the ANSI Patent Policy. If, in connection with the ANSI Patent Policy, a patent holder has filed a statement of willingness to grant licenses under these rights on reasonable and nondiscriminatory terms and conditions to applicants desiring to obtain such a license, copies of such filed statements can be obtained, on request, from NFPA. For further information, contact the NFPA at the address listed below.

Law and Regulations

Users of NFPA Documents should consult applicable federal, state, and local laws and regulations. NFPA does not, by the publication of its codes, standards, recommended practices, and guides, intend to urge action that is not in compliance with applicable laws, and these documents may not be construed as doing so.

Copyrights

NFPA Documents are copyrighted. They are made available for a wide variety of both public and private uses. These include both use, by reference, in laws and regulations, and use in private self-regulation, standardization, and the promotion of safe practices and methods. By making these documents available for use and adoption by public authorities and private users, the NFPA does not waive any rights in copyright to these documents.

Use of NFPA Documents for regulatory purposes should be accomplished through adoption by reference. The term "adoption by reference" means the citing of title, edition, and publishing information only. Any deletions, additions, and changes desired by the adopting authority should be noted separately in the adopting instrument. In order to assist NFPA in following the uses made of its documents, adopting authorities are requested to notify the NFPA (Attention: Secretary, Standards Council) in writing of such use. For technical assistance and questions concerning adoption of NFPA Documents, contact NFPA at the address below.

For Further Information

All questions or other communications relating to NFPA Documents and all requests for information on NFPA procedures governing its codes and standards development process, including information on the procedures for requesting Formal Interpretations, for proposing Tentative Interim Amendments, and for proposing revisions to NFPA documents during regular revision cycles, should be sent to NFPA headquarters, addressed to the attention of the Secretary, Standards Council, NFPA, 1 Batterymarch Park, P.O. Box 9101, Quincy, MA 02269-9101; email: stds_admin@nfpa.org

For more information about NFPA, visit the NFPA website at www.nfpa.org.

Copyright 2014 National Fire Protection Association (NFPA). Licensed, by agreement, for individual use and download on October 4, 2014 to LEADER and READER for designated user PATTARAPORN SRITRAKOOL. No other reproduction or transmission in any form permitted without written permission of NFPA. For inquires or to report unauthorized use, contact licensing@nfpa.org.

Copyright © 2013 National Fire Protection Association®. All Rights Reserved.

NFPA® 68

Standard on

Explosion Protection by Deflagration Venting

2013 Edition

This edition of NFPA 68, *Standard on Explosion Protection by Deflagration Venting*, was prepared by the Technical Committee on Explosion Protection Systems. It was issued by the Standards Council on November 27, 2012, with an effective date of December 17, 2012, and supersedes all previous editions.

This edition of NFPA 68 was approved as an American National Standard on December 17, 2012.

Origin and Development of NFPA 68

NFPA 68, *Standard on Explosion Protection by Deflagration Venting*, started out as a tentative standard in 1945, titled NFPA 68T, *Explosion Venting Standard*. In 1954, the temporary standard was replaced with NFPA 68, *Guide for Explosion Venting*, which brought together all the best available information on the fundamentals and parameters of explosions, the data developed by small-scale tests, the interpretation of the results of those tests, and the use of vents and vent closures that were current at the time. The information was then related to "rules of thumb" vent ratio recommendations, which were used for many years. Some of the vents that were designed using those rules of thumb functioned well, while others were never put to the test.

Beginning in 1954, extensive experimentation was carried out in Great Britain and Germany and added to the existing information. The U.S. Bureau of Mines also did some work in this area. However, the work was not completed because the group involved was reassigned to different programs.

In 1974, NFPA 68 was revised, and the work done in Great Britain and Germany was included with the hope that the new information would provide a means for calculating vent ratios with a greater degree of accuracy than that provided by the rules of thumb. The 1978 revision included substantial data that were more valuable in designing explosion relief vents.

In 1979, the committee began a major effort to rewrite the guide in order to incorporate the results of the test work done in Germany. In addition, the 1988 edition, titled *Guide for Venting of Deflagrations*, contained rewritten text that more clearly explained the various parameters that affect the venting of deflagrations.

The 1994 edition of NFPA 68 was completely rewritten to more clearly explain the principles of venting deflagrations. Revisions to each chapter improved the organization of information within the document without changing the venting methodology. The thrust of this revision was to improve the user friendliness and adoptability of the guide and to clarify this complex technology.

The 1998 edition introduced updated terminology to be consistent with current industrial practice. New information was added on the effects of vent ducts, calculation methods for evaluating those effects, and the effects of vent discharge. The revision also incorporated the "weak roof-to-shell" joint design as a means of venting silos and bins and provided new information on explosions in elongated vessels. It also clarified the provisions for securing restraint panels.

The 2002 edition represented a complete revision of the guide and included updated and enhanced treatment for deflagration venting design for dusts and hybrid mixtures. The revision also included new vent design equations based upon the methodology developed by Factory Mutual Research Corporation. In addition to the generalized correlation for dusts were new methods to evaluate the effects of vent ducts, partial volumes, vent panel inertia, and initially elevated pressures. All design guidelines for gas mixtures were combined into a single chapter, and the document was revised in accordance with the NFPA *Manual of Style*.

NFPA and National Fire Protection Association are registered trademarks of the National Fire Protection Association, Quincy, Massachusetts 02169.

Copyright 2014 National Fire Protection Association (NFPA). Licensed, by agreement, for individual use and download on October 4, 2014 to LEADER and READER for designated user PATTARAPORN SRITRAKOOL. No other reproduction or transmission in any form permitted without written permission of NFPA. For inquires or to report unauthorized use, contact licensing@nfpa.org.

The 2007 edition represented a complete revision, including a change from guide to standard. The new standard, titled *Standard on Explosion Protection by Deflagration Venting*, provided mandatory requirements for the design, location, installation, maintenance, and use of devices and systems to vent combustion gases and pressures from deflagrations. The Committee incorporated a new chapter on performance-based design that enabled users to present alternative design methods to satisfy the requirements for gas and mist mixtures, for dusts, and for hybrid mixtures. The Committee also revised the generalized correlation for dusts on the basis of a review of additional experimental data. That review enabled the Committee to support revisions to the basic equation, along with changes to the equations for low-inertia vent closures, panel inertia, partial volume, initially elevated pressures, and vent ducts. The Committee also added a new chapter on inspection and maintenance.

The 2013 edition introduces a revised calculation method for venting of deflagrations of gas mixtures. The chapter on venting of deflagrations in dust mixtures has been revised to address differences between translating vent panels and hinged vent panels, to permit subatmospheric initial pressures, and to incorporate new research on the entrainment of accumulated dust in a building. New sections address bucket elevators and grain silos, and new annex material provides guidance on designing vent ducts and estimating the fundamental burning velocity of a fuel.

Copyright 2014 National Fire Protection Association (NFPA). Licensed, by agreement, for individual use and download on October 4, 2014 to LEADER and READER for designated user PATTARAPORN SRITRAKOOL. No other reproduction or transmission in any form permitted without written permission of NFPA. For inquires or to report unauthorized use, contact licensing@nfpa.org.

Technical Committee on Explosion Protection Systems

Samuel A. Rodgers, *Chair*
Honeywell, Inc., VA [U]

Luke S. Morrison, *Secretary*
Professional Loss Control Inc., Canada [SE]

Michael Davies, PROTEGO, Germany [M]
Todd A. Dillon, XL Global Asset Protection Services, OH [I]
Alexi I. Dimopoulos, ExxonMobil Corporation, VA [U]
Rep. American Petroleum Institute
Henry L. Febo, Jr., FM Global, MA [I]
Robert J. Feldkamp, Nordson Corporation, OH [M]
Larry D. Floyd, BASF/Ciba Specialty Chemicals Corporation, AL [U]
Joseph P. Gillis, Westboro, MA [SE]
John E. Going, Fike Corporation, MO [M]
Stanley S. Grossel, Process Safety & Design Consultant, NJ [SE]
Dan A. Guaricci, ATEX Explosion Protection, L.P., FL [M]
Michael D. Hard, Hard Fire Suppression Systems, Inc., OH [IM]
Rep. Fire Suppression Systems Association
David D. Herrmann, E. I. DuPont de Nemours & Company, DE [U]
Alfonso F. Ibarreta, Exponent, Inc., MA [SE]
David C. Kirby, Baker Engineering & Risk Consultants, Inc., WV [SE]
Steven A. McCoy, Corn Products/National Starch, IN [U]
Rep. NFPA Industrial Fire Protection Section
James O. Paavola, DTE Energy/Detroit Edison Company, MI [U]
Stefan Penno, Rembe GmbH Safety & Control, Germany [M]
Mitchel L. Rooker, BS&B Safety Systems, LLC, OK [M]
Joseph A. Senecal, UTC/Kidde-Fenwal, Inc., MA [M]
Cleveland B. Skinker, Bechtel Power Corporation, MD [SE]
Bill Stevenson, CV Technology, Inc., FL [M]
David R. Stottmann, ST Storage, KS [M]
Stephen M. Stuart, Hylant Group, MI [I]
Erdem A. Ural, Loss Prevention Science & Technologies, Inc., MA [SE]
Robert G. Zalosh, Firexplo, MA [SE]

Alternates

Geof Brazier, BS&B Safety Systems, LLC, OK [M]
(Alt. to M. L. Rooker)
Martin P. Clouthier, Professional Loss Control Inc., Canada [SE]
(Alt. to L. S. Morrison)
Randal R. Davis, UTC/Kidde-Fenwal, Inc., MA [M]
(Alt. to J. A. Senecal)
Paul F. Hart, XL Global Asset Protection Services, IL [I]
(Alt. to T. A. Dillon)
Kirk W. Humbrecht, Phoenix Fire Systems, Inc., IL [IM]
(Alt. to M. D. Hard)
Eric R. Johnson, Savannah River Nuclear Solutions, LLC, SC [U]
(Voting Alt. to Savannah River Nuclear Rep.)
Edward L. Jones, Nordson Corporation, OH [M]
(Alt. to R. J. Feldkamp)
Jason Krbec, CV Technology, Inc., FL [M]
(Alt. to B. Stevenson)
John A. LeBlanc, FM Global, MA [I]
(Alt. to H. L. Febo, Jr.)
Gerd Ph. Mayer, Rembe, Inc., NC [M]
(Alt. to S. Penno)
Keith McGuire, CST Storage, KS [M]
(Alt. to D. R. Stottmann)
Timothy J. Myers, Exponent, Inc., MA [SE]
(Alt. to A. F. Ibarreta)
Thomas C. Scherpa, The DuPont Company, Inc., NH [U]
(Alt. to D. D. Herrmann)
Jef Snoeys, Fike Corporation, Belgium [M]
(Alt. to J. E. Going)
James Kelly Thomas, Baker Engineering & Risk Consultants, Inc., TX [SE]
(Alt. to D. C. Kirby)

Nonvoting

Franz Alfert, Inburex Consulting, Germany [SE]
Laurence G. Britton, Process Safety Consultant, WV [SE]
Vladimir Molkov, University of Ulster, Northern Ireland, UK [SE]
Richard F. Schwab, Basking Ridge, NJ [SE]
(Member Emeritus)
Harry Verakis, U.S. Department of Labor, WV [E]

Barry D. Chase, NFPA Staff Liaison

This list represents the membership at the time the Committee was balloted on the final text of this edition. Since that time, changes in the membership may have occurred. A key to classifications is found at the back of the document.

NOTE: Membership on a committee shall not in and of itself constitute an endorsement of the Association or any document developed by the committee on which the member serves.

Committee Scope: This Committee shall have primary responsibility for documents on explosion protection systems for all types of equipment and for buildings, except pressure venting devices designed to protect against overpressure of vessels such as those containing flammable liquids, liquefied gases, and compressed gases under fire exposure conditions, as now covered in existing NFPA standards.

Copyright 2014 National Fire Protection Association (NFPA). Licensed, by agreement, for individual use and download on October 4, 2014 to LEADER and READER for designated user PATTARAPORN SRITRAKOOL. No other reproduction or transmission in any form permitted without written permission of NFPA. For inquires or to report unauthorized use, contact licensing@nfpa.org.

Contents

Chapter 1 Administration 68– 6
1.1 Scope 68– 6
1.2 Purpose 68– 6
1.3 Application 68– 6
1.4 Equivalency 68– 6
1.5 Retroactivity 68– 6
1.6 Conversion Factors 68– 6
1.7 Symbols 68– 6
1.8 Pressure 68– 7

Chapter 2 Referenced Publications 68– 7
2.1 General 68– 7
2.2 NFPA Publications 68– 7
2.3 Other Publications 68– 7
2.4 References for Extracts in Mandatory Sections 68– 7

Chapter 3 Definitions 68– 8
3.1 General 68– 8
3.2 NFPA Official Definitions 68– 8
3.3 General Definitions 68– 8

Chapter 4 General Requirements 68– 9
4.1 Goal 68– 9
4.2 Objectives 68– 9
4.3 Compliance Options 68– 9

Chapter 5 Performance-Based Design Option 68–10
5.1 General Requirements 68–10
5.2 Performance Criteria 68–10

Chapter 6 Fundamentals of Venting of Deflagrations 68–10
6.1 Basic Concepts 68–10
6.2 Mixtures 68–10
6.3 Enclosure Design and Support 68–10
6.4 Enclosure Length-to-Diameter Ratio and Vent Variables 68–12
6.5 Vent Closure Operation 68–12
6.6 Consequences of a Deflagration 68–13
6.7 Effects of Vent Inertia 68–13
6.8 Effects of Vent Discharge Ducts 68–14
6.9 Venting with Flame Arresting and Particulate Retention 68–14

Chapter 7 Venting Deflagrations of Gas Mixtures and Mists 68–15
7.1 Introduction 68–15
7.2 Venting by Means of Low Inertia Vent Closures 68–15
7.3 Effects of Panel Inertia 68–17
7.4 Effects of Vent Ducts 68–17
7.5 Effects of Initial Elevated Pressure 68–17
7.6 Vent Design 68–17
7.7 Fireball Dimensions 68–18
7.8 Deflagration Venting of Enclosures Interconnected with Pipelines 68–18

Chapter 8 Venting of Deflagrations of Dusts and Hybrid Mixtures 68–18
8.1 Introduction 68–18
8.2 Venting by Means of Low-Inertia Vent Closures 68–19
8.3 Effects of Partial Volume 68–20
8.4 Effects of Initially Elevated or Subatmospheric Pressure 68–21
8.5 Effects of Vent Ducts 68–22
8.6 Bins, Hoppers, and Silos 68–22
8.7 Venting of Dust Collectors Using Bags, Filters, or Cartridges 68–23
8.8 Bucket Elevators 68–23
8.9 Fireball Dimensions 68–24
8.10 Venting Internal to a Building with Flame-Arresting and Particulate Retention Device 68–25
8.11 Venting Silos or Other Storage Vessel Provided with Integral Bin Vents 68–25
8.12 Deflagration Venting of Enclosures Interconnected with Pipelines 68–25

Chapter 9 Venting of Deflagrations of Gases and Dusts in Pipes and Ducts Operating at or Near Atmospheric Pressure 68–26
9.1 Introduction 68–26
9.2 Design 68–26
9.3 Multiple Deflagration Vents on a Pipe or Duct 68–27

Chapter 10 Details of Deflagration Vents and Vent Closures 68–27
10.1 Normally Open Vents 68–27
10.2 Normally Closed Vents 68–28
10.3 Types of Building or Room Vent Closures 68–28
10.4 Restraints for Large Panels 68–28
10.5 Equipment Vent Closures 68–28

Chapter 11 Inspection and Maintenance 68–28
11.1 General 68–28
11.2 Design Parameters and Documentation 68–29
11.3 Installation 68–29
11.4 Inspection 68–29
11.5 Procedures Following Vent Closure Actuation 68–29
11.6 Vent Closure Design Parameters 68–30
11.7 Inspection Reports 68–30
11.8 Recordkeeping 68–30

Copyright 2014 National Fire Protection Association (NFPA). Licensed, by agreement, for individual use and download on October 4, 2014 to LEADER and READER for designated user PATTARAPORN SRITRAKOOL. No other reproduction or transmission in any form permitted without written permission of NFPA. For inquires or to report unauthorized use, contact licensing@nfpa.org.

11.9 Management of Change 68–30
11.10 Maintenance 68–30
11.11 Employee Training 68–30

Annex A Explanatory Material 68–30

Annex B Fundamentals of Deflagration 68–57

Annex C Guidelines for Measuring Deflagration Parameters of Dusts 68–61

Annex D Deflagration Characteristics of Select Flammable Gases 68–64

Annex E Estimating Fundamental Burning Velocity 68–66

Annex F Deflagration Characteristics of Select Combustible Dusts 68–67

Annex G Calculation Method for Correction Factor Due to Increased Vent Panel Mass 68–69

Annex H Research Reports and Supporting Documents 68–72

Annex I Effect of Partial Volumes on Buildings — Example Problem 68–72

Annex J Bibliography 68–73

Annex K Informational References 68–76

Index 68–78

Copyright 2014 National Fire Protection Association (NFPA). Licensed, by agreement, for individual use and download on October 4, 2014 to LEADER and READER for designated user PATTARAPORN SRITRAKOOL. No other reproduction or transmission in any form permitted without written permission of NFPA. For inquires or to report unauthorized use, contact licensing@nfpa.org.

NFPA 68

Standard on

Explosion Protection by Deflagration Venting

2013 Edition

IMPORTANT NOTE: This NFPA document is made available for use subject to important notices and legal disclaimers. These notices and disclaimers appear in all publications containing this document and may be found under the heading "Important Notices and Disclaimers Concerning NFPA Documents." They can also be obtained on request from NFPA or viewed at www.nfpa.org/disclaimers.

NOTICE: An asterisk (*) following the number or letter designating a paragraph indicates that explanatory material on the paragraph can be found in Annex A.

Changes other than editorial are indicated by a vertical rule beside the paragraph, table, or figure in which the change occurred. These rules are included as an aid to the user in identifying changes from the previous edition. Where one or more complete paragraphs have been deleted, the deletion is indicated by a bullet (•) between the paragraphs that remain.

A reference in brackets [ ] following a section or paragraph indicates material that has been extracted from another NFPA document. As an aid to the user, the complete title and edition of the source documents for extracts in mandatory sections of the document are given in Chapter 2 and those for extracts in informational sections are given in Annex K. Extracted text may be edited for consistency and style and may include the revision of internal paragraph references and other references as appropriate. Requests for interpretations or revisions of extracted text shall be sent to the technical committee responsible for the source document.

Information on referenced publications can be found in Chapter 2 and Annexes H, J, and K.

Chapter 1 Administration

1.1* Scope. This standard applies to the design, location, installation, maintenance, and use of devices and systems that vent the combustion gases and pressures resulting from a deflagration within an enclosure so that structural and mechanical damage is minimized.

1.2* Purpose. The purpose of this standard is to provide the user with criteria for design, installation, and maintenance of deflagration vents and associated components.

1.3* Application. This standard applies where the need for deflagration venting has been established.

1.3.1 This standard does not apply to detonations, bulk autoignition of gases, or unconfined deflagrations, such as open-air or vapor cloud explosions.

1.3.2* This standard does not apply to devices that are designed to protect storage vessels against excess internal pressure due to external fire exposure or to exposure to other heat sources.

1.3.3 This standard does not apply to emergency vents for pressure generated during runaway exothermic reactions, self-decomposition reactions, internal vapor generation resulting from electrical faults, or pressure generation mechanisms other than deflagration.

1.3.4 This standard does not apply to venting of deflagrations in oxygen-enriched atmospheres or other oxidants unless supported by specific test data.

1.4 Equivalency. Nothing in this standard is intended to prevent the use of systems, methods, or devices of equivalent or superior quality, strength, fire resistance, effectiveness, durability, and safety over those prescribed by this standard.

1.4.1 Technical documentation shall be submitted to the authority having jurisdiction to demonstrate equivalency.

1.4.2 The system, method, or device shall be approved for the intended purpose by the authority having jurisdiction.

1.5 Retroactivity.

1.5.1 The provisions of this standard reflect a consensus of what is necessary to provide an acceptable degree of protection from the hazards addressed in this standard at the time the standard was issued.

1.5.1.1 Unless otherwise specified, the provisions of this standard shall not apply to facilities, equipment, structures, or installations that existed or were approved for construction or installation prior to the effective date of the standard. Where specified, the provisions of this standard shall be retroactive.

1.5.1.2 In those cases where the authority having jurisdiction determines that the existing situation presents an unacceptable degree of risk, the authority having jurisdiction shall be permitted to apply retroactively any portions of this standard deemed appropriate.

1.5.1.3 The retroactive requirements of this standard shall be permitted to be modified if their application clearly would be impractical in the judgment of the authority having jurisdiction, and only where it is clearly evident that a reasonable degree of safety is provided.

1.5.2 This standard shall apply to facilities on which construction is begun subsequent to the date of publication of the standard.

1.5.3 When major replacement or renovation of existing facilities is planned, provisions of this standard shall apply.

1.6 Conversion Factors. The conversion factors in Table 1.6 are useful for understanding the data presented in this standard.

1.7 Symbols. The following symbols are defined for the purpose of this standard:

A	=	area (m^2, ft^2, or $in.^2$)
A_S	=	internal surface area of enclosure (m^2 or ft^2)
A_v	=	vent area (m^2 or ft^2)
C	=	constant used in venting equations as defined in each specific use
dP/dt	=	rate of pressure rise (bar/s or psi/s)
F_r	=	reaction force constant (lb)
K_G	=	deflagration index for gases (bar-m/s)
K_{St}	=	deflagration index for dusts (bar-m/s)
L_n	=	linear dimension of enclosure [m or ft ($n = 1, 2, 3$)]
L_x	=	distance between adjacent vents
L/D	=	length to diameter ratio (dimensionless)
LFL	=	lower flammable limit (percent by volume for gases, weight per volume for dusts and mists)

Copyright 2014 National Fire Protection Association (NFPA). Licensed, by agreement, for individual use and download on October 4, 2014 to LEADER and READER for designated user PATTARAPORN SRITRAKOOL. No other reproduction or transmission in any form permitted without written permission of NFPA. For inquires or to report unauthorized use, contact licensing@nfpa.org.

MEC = minimum explosible concentration (g/m^3 or oz/ft^3)
MIE = minimum ignition energy (mJ)
p = perimeter of duct cross-section (m or ft)
P = pressure (bar or psi)
P_{es} = enclosure strength (bar or psi)
P_{ex} = explosion pressure (bar or psi)
P_{max} = maximum pressure developed in an unvented vessel (bar or psi)
P_0 = initial pressure (bar or psi)
P_{red} = reduced pressure [i.e., maximum pressure actually developed during a vented deflagration (bar or psi)]
P_{stat} = static activation pressure (bar or psi)
dP = pressure differential (bar or psi)
S_u = fundamental burning velocity (cm/s)
S_f = flame speed (cm/s)
t_f = duration of pressure pulse (s)
UFL = upper flammable limit (percent by volume)
V = volume (m^3 or ft^3)

Table 1.6 Conversion Factors

Parameter	Unit	Equivalent
Length	1 m	3.28 ft
		39.4 in.
	1 in.	25.4 mm
	1 ft	305 mm
	1 µm	1.00×10^{-6} m
Area	1 m^2	10.8 ft^2
	1 in.^{2}	6.45 cm^2
Volume	1 L	61.0 in.^{3}
	1 ft^3	7.48 U.S. gal
	1 m^3	35.3 ft^3
		264 U.S. gal
	1 U.S. gal	3.78 L
		231 in.^{3}
		0.134 ft^3
Pressure	1 atm	760 mm Hg
		101 kPa
		14.7 psi
		1.01 bar
	1 psi	6.89 kPa
	1 N/m^2	1.00 Pa
	1 bar	100 kPa
		14.5 psi
		0.987 atm
	1 kg/cm^2	14.2 psi
	1 kg/m^2	0.205 lb/ft^2 (psf)
Energy	1 J	1.00 W-s
	1 Btu	1055 J
	1 J	0.738 ft-lb
K_G and K_{St} conversion	1 bar-m/s	47.6 psi-ft/s
	1 psi-ft/s	0.021 bar-m/s
Concentration	1 oz avoirdupois/ft^3	1000 g/m^3

Key to abbreviations:
atm = atmosphere
Btu = British thermal unit
cm = centimeter
ft = foot
g = gram
gal = gallon
Hg = mercury
in. = inch
J = joule
kg = kilogram
kPa = kilopascal
L = liter
lb = pound
m = meter
mm = millimeter
N = newton
oz = ounce
Pa = pascal
psf = pounds per square foot
psi = pounds per square inch
s = second
W = watt
µm = micron (micrometer)

1.8 Pressure. All pressures are gauge pressure unless otherwise specified.

Chapter 2 Referenced Publications

2.1 General. The documents or portions thereof listed in this chapter are referenced within this standard and shall be considered part of the requirements of this document.

2.2 NFPA Publications. National Fire Protection Association, 1 Batterymarch Park, Quincy, MA 02169-7471.

NFPA 69, *Standard on Explosion Prevention Systems,* 2008 edition.

NFPA 70®, National Electrical Code®, 2011 edition.

NFPA 654, *Standard for the Prevention of Fire and Dust Explosions from the Manufacturing, Processing, and Handling of Combustible Particulate Solids,* 2013 edition.

NFPA 704, *Standard System for the Identification of the Hazards of Materials for Emergency Response,* 2012 edition.

2.3 Other Publications.

2.3.1 API Publications. American Petroleum Institute, 1220 L Street, NW, Washington, DC 20005-4070.

API 650, *Welded Steel Tanks for Oil Storage,* 2007.

2.3.2 ASME Publications. American Society of Mechanical Engineers, Two Park Avenue, New York, NY 10016-5990.

ASME *Boiler and Pressure Vessel Code,* 2010.

2.3.3 ASTM Publications. ASTM International, 100 Barr Harbor Drive, P.O. Box C700, West Conshohocken, PA 19428-2959.

ASTM E 1226, *Standard Test Method for Explosibility of Dust Clouds,* 2010.

2.3.4 ISO Publications. International Organization for Standardization, 1, rue de Varembè, Case postale 56, CH-1211 Geneve 20, Switzerland.

ISO 6184/1, *Explosion Protection Systems — Part 1: Determination of Explosion Indices of Combustible Dust in Air,* 1985.

2.3.5 Other Publications.

Merriam-Webster's Collegiate Dictionary, 11th edition, Merriam-Webster, Inc., Springfield, MA, 2003.

2.4 References for Extracts in Mandatory Sections.

NFPA 53, *Recommended Practice on Materials, Equipment, and Systems Used in Oxygen-Enriched Atmospheres,* 2011 edition.

NFPA 484, *Standard for Combustible Metals,* 2012 edition.

NFPA 654, *Standard for the Prevention of Fire and Dust Explosions from the Manufacturing, Processing, and Handling of Combustible Particulate Solids,* 2013 edition.

Copyright 2014 National Fire Protection Association (NFPA). Licensed, by agreement, for individual use and download on October 4, 2014 to LEADER and READER for designated user PATTARAPORN SRITRAKOOL. No other reproduction or transmission in any form permitted without written permission of NFPA. For inquires or to report unauthorized use, contact licensing@nfpa.org.

Chapter 3 Definitions

3.1 General. The definitions contained in this chapter shall apply to the terms used in this standard. Where terms are not defined in this chapter or within another chapter, they shall be defined using their ordinarily accepted meanings within the context in which they are used. *Merriam-Webster's Collegiate Dictionary,* 11th edition, shall be the source for the ordinarily accepted meaning.

3.2 NFPA Official Definitions.

3.2.1* Approved. Acceptable to the authority having jurisdiction.

3.2.2* Authority Having Jurisdiction (AHJ).

3.2.3 Labeled. Equipment or materials to which has been attached a label, symbol, or other identifying mark of an organization that is acceptable to the authority having jurisdiction and concerned with product evaluation, that maintains periodic inspection of production of labeled equipment or materials, and by whose labeling the manufacturer indicates compliance with appropriate standards or performance in a specified manner.

3.2.4* Listed. Equipment, materials, or services included in a list published by an organization that is acceptable to the authority having jurisdiction and concerned with evaluation of products or services, that maintains periodic inspection of production of listed equipment or materials or periodic evaluation of services, and whose listing states that either the equipment, material, or service meets appropriate designated standards or has been tested and found suitable for a specified purpose.

3.2.5 Shall. Indicates a mandatory requirement.

3.2.6 Should. Indicates a recommendation or that which is advised but not required.

3.2.7 Standard. A document, the main text of which contains only mandatory provisions using the word "shall" to indicate requirements and which is in a form generally suitable for mandatory reference by another standard or code or for adoption into law. Nonmandatory provisions are not to be considered a part of the requirements of a standard and shall be located in an appendix, annex, footnote, informational note, or other means as permitted in the *Manual of Style for NFPA Technical Committee Documents.*

3.3 General Definitions.

3.3.1 Burning Velocity. The rate of flame propagation relative to the velocity of the unburned gas that is ahead of it.

3.3.1.1 *Fundamental Burning Velocity.* The burning velocity of a laminar flame under stated conditions of composition, temperature, and pressure of the unburned gas.

3.3.2 Combustible Dust. A finely divided combustible particulate solid that presents a flash fire hazard or explosion hazard when suspended in air or the process-specific oxidizing medium over a range of concentrations. [**654**, 2013]

3.3.3 Combustion. A chemical process of oxidation that occurs at a rate fast enough to produce heat and usually light in the form of either a glow or flame.

3.3.4 Deflagration. Propagation of a combustion zone at a velocity that is less than the speed of sound in the unreacted medium.

3.3.5 Deflagration Index. Value indicated by the use of variable, *K. (See 3.3.19, K_G, and 3.3.20, K_{St}.)*

3.3.6 Detonation. Propagation of a combustion zone at a velocity greater than the speed of sound in the unreacted medium.

3.3.7* Enclosure. A confined or partially confined volume.

3.3.8 Equivalent Diameter. See 3.3.18, Hydraulic Diameter.

3.3.9 Explosible. A material with a pressure ratio (maximum pressure/pressure at ignition, in absolute units) equal to or greater than 2.0 in any test when tested using the explosibility or Go/No-Go screening test described in Section 13 of ASTM E 1226, *Standard Test Method for Explosibility of Dust Clouds.*

3.3.10 Explosion. The bursting or rupturing of an enclosure or a container due to the development of internal pressure from a deflagration.

3.3.11* Flame Speed. The speed of a flame front relative to a fixed reference point.

3.3.12 Flammable Limits. The minimum and maximum concentrations of a combustible material, in a homogeneous mixture with a gaseous oxidizer, that will propagate a flame.

3.3.12.1* *Lower Flammable Limit (LFL).* The lowest concentration of a combustible substance in a gaseous oxidizer that will propagate a flame, under defined test conditions.

3.3.12.2 *Upper Flammable Limit (UFL).* The highest concentration of a combustible substance in a gaseous oxidizer that will propagate a flame.

3.3.13 Flammable Range. The range of concentrations between the lower and upper flammable limits.

3.3.14* Flash Point. The minimum temperature at which a liquid or a solid emits vapor sufficient to form an ignitible mixture with air near the surface of the liquid or the solid.

3.3.15* Friction Factor, f_D. A dimensionless factor relating pressure drop in a straight duct to velocity and wetted surface area.

3.3.16 Fundamental Burning Velocity. See 3.3.1.1.

3.3.17 Gas. The state of matter characterized by complete molecular mobility and unlimited expansion; used synonymously with the term *vapor.*

3.3.18* Hydraulic Diameter. A diameter for noncircular cross sections that is determined by $4(A/p)$, where A is the cross-sectional area normal to the longitudinal axis of the space and p is the perimeter of the cross section.

3.3.19* K_G. The deflagration index of a gas cloud.

3.3.20* K_{St}. The deflagration index of a dust cloud.

3.3.21 Maximum Pressure (P_{max}). See 3.3.27.1.

3.3.22 Minimum Explosible Concentration (MEC). The minimum concentration of a combustible dust cloud that is capable of propagating a deflagration through a uniform mixture of the dust and air under the specified conditions of test.

3.3.23* Minimum Ignition Energy (MIE). The minimum amount of energy released at a point in a combustible mixture that causes flame propagation away from the point, under specified test conditions.

3.3.24 Mist. A dispersion of fine liquid droplets in a gaseous medium.

Copyright 2014 National Fire Protection Association (NFPA). Licensed, by agreement, for individual use and download on October 4, 2014 to LEADER and READER for designated user PATTARAPORN SRITRAKOOL. No other reproduction or transmission in any form permitted without written permission of NFPA. For inquires or to report unauthorized use, contact licensing@nfpa.org.

3.3.25 Mixture.

3.3.25.1* ***Hybrid Mixture.*** An explosible heterogeneous mixture, comprising gas with suspended solid or liquid particulates, in which the total flammable gas concentration is ≥10 percent of the lower flammable limit (LFL) and the total suspended particulate concentration is ≥10 percent of the minimum explosible concentration (MEC).

3.3.25.2* ***Optimum Mixture.*** A specific mixture of fuel and oxidant that yields the most rapid combustion at a specific measured quantity or that yields the lowest value of the minimum ignition energy or that produces the maximum deflagration pressure.

3.3.25.3 ***Stoichiometric Mixture.*** A balanced mixture of fuel and oxidizer such that no excess of either remains after combustion. [**53**, 2011]

3.3.26* Oxidant. Any gaseous material that can react with a fuel (either gas, dust, or mist) to produce combustion.

3.3.27 Pressure.

3.3.27.1 ***Maximum Pressure (P_{max}).*** The maximum pressure developed in a contained deflagration of an optimum mixture.

3.3.27.2 ***Reduced Pressure (P_{red}).*** The maximum pressure developed in a vented enclosure during a vented deflagration.

3.3.27.3 ***Static Activation Pressure (P_{stat}).*** Pressure that activates a vent closure when the pressure is increased slowly [with a rate of pressure rise less than 0.1 bar/min (1.5 psi/min)].

3.3.28 Rate of Pressure Rise *(dP/dt).* The increase in pressure divided by the time interval necessary for that increase to occur.

3.3.28.1* ***Maximum Rate of Pressure Rise [$(dP/dt)_{max}$].*** The slope of the steepest part of the pressure-versus-time curve recorded during deflagration in a closed vessel.

3.3.29 Reduced Pressure *(P_{red}).* See 3.3.27.2.

3.3.30 Replacement-in-Kind. A replacement that satisfies the design specifications. [**484**, 2012]

3.3.31 Static Activation Pressure *(P_{stat}).* See 3.3.27.3.

3.3.32 Strength.

3.3.32.1 ***Enclosure Strength (P_{es}).*** Up to two-thirds the ultimate strength for low-strength enclosures; for high-strength enclosures the enclosure design pressure sufficient to resist P_{red}.

3.3.32.2 ***Ultimate Strength.*** The pressure that results in the failure of the weakest structural component of an enclosure.

3.3.33 Vapor. See 3.3.17, Gas.

3.3.34 Vent. An opening in an enclosure to relieve the developing pressure from a deflagration.

3.3.34.1* ***Hinge Vent.*** Vent closure that is hinged on one or more sides.

3.3.34.2* ***Translating Vent.*** Vent closure that detaches from the vent opening during a vent actuation and travels downstream as one or more pieces with the venting flow.

3.3.35 Vent Closure. A pressure-relieving cover that is placed over a vent.

Chapter 4 General Requirements

4.1 Goal. The goal of this standard shall be to provide effective deflagration venting for enclosures where there is the potential for a deflagration.

4.2 Objectives.

4.2.1 Life Safety.

4.2.1.1* 12Deflagration venting for occupied enclosures shall prevent the structural failure of the enclosure and minimize injury to personnel in adjacent areas outside of the enclosure.

4.2.1.2 Deflagration venting for unoccupied enclosures shall prevent the rupture of the enclosure.

4.2.1.3 Deflagration venting shall be arranged to avoid injury to personnel by the vent discharge.

4.2.1.4* If the process material has a degree of health hazard (health hazard rating) of 3 or 4 according to NFPA 704, *Standard System for the Identification of the Hazards of Materials for Emergency Response*, deflagration venting directed inside buildings shall not be permitted even when flame-arresting and particulate retention devices are used.

4.2.1.5 Where explosion protection is required and the process material has a degree of health hazard (health hazard rating) of 3 or 4 according to NFPA 704, *Standard System for the Identification of the Hazards of Materials for Emergency Response*, alternative protection measures described in NFPA 69, *Standard on Explosion Prevention Systems*, shall be applied unless deflagration venting is supported by a risk assessment suitable to the authority having jurisdiction.

4.2.2 Property Protection.

4.2.2.1 Deflagration venting shall be designed to limit damage of the vented enclosure.

4.2.2.2* Deflagration venting shall be arranged to avoid ignition of adjacent property.

4.2.2.3 Deflagration venting shall be arranged to avoid blast damage to adjacent property.

4.2.2.4 Deflagration venting shall be arranged to avoid projectile damage to adjacent property.

4.2.3 Hazard Analysis.

4.2.3.1 The design basis deflagration hazard scenario shall be identified and documented.

4.2.3.2 A documented risk evaluation acceptable to the authority having jurisdiction shall be permitted to be conducted to determine the level of protection to be provided.

4.3 Compliance Options.

4.3.1 Options. Deflagration venting meeting the goals and objectives of Sections 4.1 and 4.2 shall be provided in accordance with either of the following:

(1) Performance-based provisions of 4.3.2
(2) Prescriptive-based provisions of 4.3.3

4.3.2 Performance-Based Design. A performance-based design shall be in accordance with Chapter 5 of this standard.

4.3.3 Prescriptive-Based Design. A prescriptive-based design shall be in accordance with Chapters 6 through 11 of this standard.

Copyright 2014 National Fire Protection Association (NFPA). Licensed, by agreement, for individual use and download on October 4, 2014 to LEADER and READER for designated user PATTARAPORN SRITRAKOOL. No other reproduction or transmission in any form permitted without written permission of NFPA. For inquires or to report unauthorized use, contact licensing@nfpa.org.

Chapter 5 Performance-Based Design Option

5.1 General Requirements.

5.1.1* Qualifications. The performance-based design shall be prepared by a person with qualifications acceptable to the authority having jurisdiction.

5.1.2 Design Documentation. The design methodology and data sources shall be documented and maintained for the life of the protected enclosure.

5.1.3 Maintenance of Design Features.

5.1.3.1 To continue meeting the performance goals and objectives of this standard, the design features required for each deflagration vent shall be maintained for the life of the protected enclosure.

5.1.3.2 Any changes to the design shall require approval of the authority having jurisdiction prior to the actual change.

5.2 Performance Criteria.

5.2.1 Deflagration vent design shall be based on the documented hazard scenario.

5.2.2 Deflagration vents shall limit the reduced pressure (P_{red}) within an enclosure and any attached vent ducts to meet the objectives in 4.2.1.1 and 4.2.1.2.

5.2.3 Deflagration Vent Discharge.

5.2.3.1 Combustible materials outside the enclosure shall not attain their ignition temperature from flame or hot gases discharged from a deflagration vent.

5.2.3.2* Blast load from deflagration vent discharge shall limit the risk of damage to exposed structures.

5.2.3.3* Access to spaces into which deflagration vents discharge shall be restricted so as to minimize, to a level acceptable to the authority having jurisdiction, the risk of injury from flame, hot gases, hot particles, or projectiles.

5.2.4 Inspection and Maintenance.

5.2.4.1 Deflagration venting shall be regularly inspected and maintained to confirm the ability of the venting to perform as designed.

5.2.4.1.1 If no guidance is given from the performance-based design documents, the requirements of Chapter 11 of this standard shall apply.

5.2.4.2 Inspection and maintenance shall be documented and retained for at least 1 year or the last three inspections.

Chapter 6 Fundamentals of Venting of Deflagrations

6.1* Basic Concepts.

6.1.1* The deflagration index, *K*, shall be computed from the maximum rate of pressure rise attained by combustion in a closed vessel with volume, *V*, and shall be defined by the following equation:

$$K = \left(\frac{dP}{dt}\right)_{max} \cdot V^{1/3} \qquad (6.1.1)$$

6.1.2* For dusts, K_{St} and P_{max} shall be determined in approximately spherical calibrated test vessels of at least 20 L capacity per ASTM E 1226, *Standard Test Method for Explosibility of Dust Clouds.*

6.1.2.1* It shall be permitted to determine K_{St} and P_{max} per ISO 6184/1, *Explosion Protection Systems — Part 1: Determination of Explosion Indices of Combustible Dusts in Air.*

6.1.2.2 The owner/user shall be permitted to test the dust with moisture content and particle size that deviates from the recommended conditions established by the method described in 6.1.2 or 6.1.2.1, provided a documented assessment acceptable to the authority having jurisdiction has been performed prior to using these K_{St} and P_{max} values to determine vent sizing.

6.1.3* The most accurate value of K_G shall be determined directly by test, as outlined in Annex C.

6.1.3.1 If testing cannot be done to determine K_G for a particular gas, K_G shall be permitted to be approximated by ratioing from the K_G of propane (100 bar-m/s) on the basis of the corresponding fundamental burning velocity *(see Annex D)* of propane (46 cm/s) and the fundamental burning velocity of the gas in question.

6.1.3.2 For gases, P_{max} shall be determined in approximately spherical calibrated test vessels of at least 5 L (1.3 gal) capacity with initially quiescent mixture with low energy ignition source (less than 100 J).

6.2 Mixtures.

6.2.1 Gas Mixtures.

6.2.1.1 Where the hazard consists of a flammable gas mixture, the vent size shall be based on the fundamental burning velocity of the mixture.

6.2.1.2 Where the gas mixture composition is not certain, the vent size shall be based on the component having the highest fundamental burning velocity.

6.2.2 Dust Mixtures.

6.2.2.1 Where the hazard consists of a dust mixture, the vent size shall be based on the K_{St} and P_{max} of the mixture.

6.2.2.2 Where the dust mixture composition is not certain, the vent size shall be based on the highest K_{St} of all components and the highest P_{max} of all components.

6.2.3* Hybrid Mixtures.

6.2.3.1 For hybrid mixtures, the vent size shall be based on the equivalent mixture K_{St} as determined by test.

6.2.3.2 Where test data are not available for hybrid mixtures with gases that have combustion characteristics similar to those of propane (fundamental burning velocity ≤1.3 times that of propane) and St-1 and St-2 dusts, the design shall be permitted to be based upon P_{max} = 10 bar and K_{St} = 500 bar-m/s.

6.2.4* Foams of Combustible Liquids. Design of deflagration venting for foams of combustible liquids shall be based on tests performed on the specific foam.

6.3 Enclosure Design and Support.

6.3.1 Enclosure Design Pressure Selection Criteria.

6.3.1.1* P_{red} shall not exceed two-thirds of the ultimate strength for the vented enclosure, provided deformation of the equipment can be tolerated.

Copyright 2014 National Fire Protection Association (NFPA). Licensed, by agreement, for individual use and download on October 4, 2014 to LEADER and READER for designated user PATTARAPORN SRITRAKOOL. No other reproduction or transmission in any form permitted without written permission of NFPA. For inquires or to report unauthorized use, contact licensing@nfpa.org.

6.3.1.2* Where deformation cannot be tolerated, P_{red} shall not exceed two-thirds of the yield strength for the vented enclosure.

6.3.1.3* For enclosures designed using the ASME *Boiler and Pressure Vessel Code* or similar codes, the maximum allowable working pressure, herein designated as P_{mawp}, shall be determined by calculation.

6.3.1.3.1 Such determinations shall include an allowable stress for the enclosure material of construction, which is less than the measured yield stress and the measured ultimate stress for the material of construction.

6.3.1.3.2 Given a P_{mawp}, P_{red} shall be selected based on the following conditions as defined by Equation 6.3.1.3.2a or Equation 6.3.1.3.2b:

(1) Permanent deformation, but not rupture, of the enclosure can be accepted:

$$P_{red} \le \left(\tfrac{2}{3}\right) \cdot F_u \cdot P_{mawp} \qquad \textbf{(6.3.1.3.2a)}$$

(2) Permanent deformation of the enclosure cannot be accepted:

$$P_{red} \le \left(\tfrac{2}{3}\right) \cdot F_y \cdot P_{mawp} \qquad \textbf{(6.3.1.3.2b)}$$

where:

P_{red} = maximum pressure developed in a vented enclosure [bar (psi)]
F_u = ratio of ultimate stress of the enclosure to the allowable stress of the enclosure per the ASME *Boiler and Pressure Vessel Code*
P_{mawp} = enclosure design pressure [bar (psi)] according to ASME *Boiler and Pressure Vessel Code*
F_y = ratio of the yield stress of the enclosure to the allowable stress of the materials of construction of the enclosure per the ASME *Boiler and Pressure Vessel Code*

6.3.1.4 Ductile design considerations shall be used for materials subject to brittle failure, such as cast iron.

6.3.1.4.1 Special reinforcing shall be considered.

6.3.1.4.2 If such reinforcing is not used, the maximum allowable design stress shall not exceed 25 percent of the ultimate strength.

6.3.2* Venting shall be sufficient to prevent the maximum pressure that develops within the enclosure, P_{red}, from exceeding the enclosure strength, P_{es}, including the dynamic effect of the rate of pressure rise, as expressed by a dynamic load factor (*DLF*):

$$P_{red} \le \frac{P_{es}}{DLF} \qquad \textbf{(6.3.2)}$$

where:

P_{red} = maximum pressure developed during venting [bar (psi)]
P_{es} = enclosure strength evaluated based on static pressure calculations for either deformation or burst [bar (psi)]
DLF = X_m/X_s
X_m = maximum dynamic deflection
X_s = static deflection or, in other words, the displacement produced in the system when the peak load is applied statically

6.3.2.1 In the absence of detailed structural response analysis, it shall be permitted to assume a worst-case value of $DLF = 1.5$ and design based on the weakest structural element of the enclosure.

6.3.2.2* It shall be permitted to modify the value of *DLF* based on a documented analysis of the vented explosion pressure profile and enclosure structural response.

6.3.3 All structural elements and supports shall be included in the design calculations.

6.3.3.1* The weakest structural element, as well as any equipment or other devices that can be supported by structural elements, shall be identified.

6.3.3.2 Where designing an enclosure to prevent catastrophic failure while still allowing permanent deformation, the normal dead and live loads shall not be relied on to provide restraint.

6.3.3.3 Structural members shall be designed to support the total load.

6.3.3.4 Doors, windows, ducts, or other openings in walls that are intended to be pressure resistant shall also be designed to withstand P_{red}.

6.3.4 Relieving Walls or Roof.

6.3.4.1 Nothing in this standard shall prohibit the use of an enclosure with relieving walls, or a roof, provided the potential for damage and injury is addressed.

6.3.4.2 A lightweight roof shall be permitted to be used as a vent, provided its movement can be tolerated and provided its movement is not hindered by ice or snow.

6.3.5 Enclosure Support Criteria.

6.3.5.1* The supporting structure for the enclosure shall be strong enough to withstand any reaction forces that develop as a result of operation of the vent, including the dynamic effect of the rate of force application, as expressed by a *DLF*.

6.3.5.2* The following equation shall be used to determine the reaction force applicable to enclosures without vent ducts:

$$F_r = a \cdot DLF \cdot A_v \cdot P_{red} \qquad \textbf{(6.3.5.2)}$$

where:

F_r = maximum reaction force resulting from combustion venting [kN (lbf)]
a = units conversion [100 (1)]
DLF = 1.2
A_v = vent area [m^2 ($in.^2$)]
P_{red} = maximum pressure developed during venting [bar (psi)]

6.3.5.3* Modification of the value of *DLF* based on a documented analysis of the vented explosion pressure profile and the supporting structure's response shall be permitted.

6.3.5.4* The total reaction force shall be applied at the geometric center of the vent.

6.3.5.4.1 The calculation of reaction forces on the enclosure shall be permitted to be eliminated when all of the following conditions are satisfied:

(1) Vent panels are of the rupture diaphragm type.
(2) Vent panels are located at opposing positions on the enclosure.
(3) The P_{stat} of each vent panel is equal and less than or equal to 0.1 bar.
(4) Vent panels are of equal area.

Copyright 2014 National Fire Protection Association (NFPA). Licensed, by agreement, for individual use and download on October 4, 2014 to LEADER and READER for designated user PATTARAPORN SRITRAKOOL. No other reproduction or transmission in any form permitted without written permission of NFPA. For inquires or to report unauthorized use, contact licensing@nfpa.org.

6.3.5.5* The duration of the reaction force shall be calculated according to Equation 6.3.5.5, which is shown to represent the available duration data within a minus 37 percent and a plus 118 percent:

$$t_f = b \cdot \left(\frac{P_{max}}{P_{red}}\right)^{0.5} \cdot \left(\frac{V}{A_v}\right) \qquad \textbf{(6.3.5.5)}$$

where:

t_f = duration of pressure pulse after vent opening (s)
b = $4.3 \cdot 10^{-3}(1.3 \cdot 10^{-3})$
P_{max} = maximum pressure developed in an unvented explosion [bar (psi)]
P_{red} = maximum pressure developed during venting [bar (psi)]
V = enclosure volume [m^3 (ft^3)]
A_v = area of vent (without vent duct) [m^2(ft^2)]

6.3.5.6* The total impulse that a structure supporting a vented enclosure experiences during deflagration venting shall be expressed by the following equation:

$$I = 0.52 \cdot F_r \cdot t_f \qquad \textbf{(6.3.5.6)}$$

where:

I = total impulse experienced by supporting structure [kN-s (lbf-s)]
F_r = maximum reaction force resulting from combustion venting [kN (lbf)]
t_f = duration of pressure pulse after vent opening (s)

6.4* Enclosure Length-to-Diameter Ratio and Vent Variables.

6.4.1 For silos and other enclosures that can be vented at only one end, the maximum effective vent area to use to determine the expected P_{red} shall be the enclosure cross section.

6.4.2 For enclosures that can be vented at more than one point along the major axis, the vents shall be permitted to be distributed along the major axis and sized based on the length to diameter (L/D) between vents.

6.4.2.1 The maximum effective vent area at any point along the major axis shall be the enclosure cross section.

6.4.3* *L/D* of Elongated Enclosures.

6.4.3.1 The L/D of an elongated enclosure shall be determined based upon the general shape of the enclosure, the location of the vent, the shape of any hopper extensions, and the farthest distance from the vent at which the deflagration could be initiated.

6.4.3.2 The maximum flame length along which the flame can travel, H, shall be determined based on the maximum distance, taken along the central axis, from the farthest end of the enclosure to the opposite end of the vent.

6.4.3.2.1 When multiple vents are provided, a single value of H, and L/D, shall be permitted to be determined for the enclosure based on the farthest vent.

6.4.3.2.2 When multiple vents are located along the central axis, the value of H, and L/D, shall be permitted to be determined for each section using the maximum distance from the closest end of one vent to the opposite end of the next vent.

6.4.3.3 The effective volume of the enclosure, V_{eff}, shall be determined based on the volume of that part of the enclosure through which the flame can pass as it travels along the maximum flame length, H.

6.4.3.3.1 Internal volume of dust collector bags, filters, or cartridges shall be permitted to be eliminated when determining the effective volume of an elongated enclosure, when the vent is positioned as required by 8.7.1(1) or 8.7.1(2).

6.4.3.3.2 Partial volume *(see Section 8.3)* shall not be considered in the determination of effective volume per this section.

6.4.3.3.3 When multiple vents are provided, a single value of V_{eff} shall be permitted to be determined for the enclosure based upon the farthest vent.

6.4.3.3.4 When multiple vents are located along the central axis, V_{eff} shall be permitted to be determined for each section using the maximum distance from the closest end of one vent to the opposite end of the next vent.

6.4.3.3.5 When V_{eff} is less than the total volume of the enclosure, only those vents located within the effective volume shall be considered as providing venting for the event.

6.4.3.4 It shall be permitted to conservatively determine both H and V_{eff}, or H alone, but not V_{eff} alone, based on the total enclosure, irrespective of vent location.

6.4.3.5 The effective area, A_{eff}, shall be determined by dividing V_{eff} by H.

6.4.3.6 The effective hydraulic diameter, D_{he}, for the enclosure shall be determined based on the general shape of the enclosure taken normal to the central axis:

$$D_{he} = 4 \cdot \left(\frac{A_{eff}}{p}\right)$$

where p = perimeter of the general shape.

6.4.3.6.1 Where the enclosure and any hopper extension are generally cylindrical, the perimeter, p, shall be permitted to be determined based on a circular cross section, given the following:

$$D_{he} = \left(\frac{4 \cdot A_{eff}}{\pi}\right)^{0.5}$$

6.4.3.6.2 Where the enclosure and any hopper extension are generally rectangular or square, and the aspect ratio of the largest cross section is between 1 and 1.2, the perimeter shall be permitted to be determined based on a square cross section, given the following:

$$D_{he} = \left(A_{eff}\right)^{0.5}$$

6.4.3.7 L/D for use in this standard shall be set equal to H/D_{he}.

6.4.4* The vent areas shall be permitted to be reduced from those specified in Chapters 7 and 8 if large-scale tests show that the resulting damage is acceptable to the user and the authority having jurisdiction.

6.4.5* The owner/user shall be permitted to install vents that are larger in area, are lower in density, or relieve at lower pressure than the minimum requirements determined from application of Chapter 7 or Chapter 8, as appropriate.

6.5 Vent Closure Operation.

6.5.1* The vent opening shall be free and clear.

6.5.2 Vent closure operation shall not be hindered by deposits of snow, ice, paint, corrosion, or debris, or by the buildup of deposits on their inside surfaces.

Copyright 2014 National Fire Protection Association (NFPA). Licensed, by agreement, for individual use and download on October 4, 2014 to LEADER and READER for designated user PATTARAPORN SRITRAKOOL. No other reproduction or transmission in any form permitted without written permission of NFPA. For inquires or to report unauthorized use, contact licensing@nfpa.org.

6.5.2.1* The materials that are used shall be chosen to minimize corrosion from process conditions within the enclosure and from ambient conditions on the nonprocess side.

6.5.2.2 Clear space shall be maintained on both sides of a vent to enable operation without restriction and without impeding a free flow through the vent.

6.5.2.3 To prevent snow and ice accumulation, where the potential exists, and to prevent entry of rainwater and debris, the vent or vent duct exit shall not be installed in the horizontal position, unless any of the alternative methods in 6.5.2.3.1 are followed.

6.5.2.3.1 Any of the following alternative methods of protection for horizontal vent or vent duct exits shall be permitted:

(1) Fixed rain hats where P_{red} effects on vent area are included in accordance with Section 8.5 and restraint design includes maximum force from P_{red} applied over the area
(2) Weather covers mounted at an angle sufficient to shed snow, with restraints designed and tested to prevent the cover from becoming a free projectile, where inertia effects of the additional weather cover mass and P_{stat} of the cover are included
(3) Deicing provisions such as a heated vent closure

6.5.3 Restraining devices shall not impede the operation of the vent or vent closure device. *(See Chapter 10.)*

6.5.4 A vent closure shall release at its P_{stat} or within a pressure range specified by the vent closure manufacturer.

6.5.5 A vent closure shall reliably withstand pressure fluctuations that are below P_{stat}.

6.5.6 A vent closure shall withstand vibration or other mechanical forces to which it can be subjected.

6.5.7* P_{stat}, including the manufacturer's negative tolerance, shall be greater than the anticipated loading equivalent to the local design wind speed such that wind load will not cause the vent to open.

6.5.7.1 The area calculation shall be performed using the nominal value of P_{stat}.

6.5.8* P_{stat}, including the manufacturer's positive tolerance, shall be less than the intended P_{red}.

6.5.8.1 The area calculation shall be performed using the nominal value of P_{stat}.

6.5.9* Vent closures shall be maintained in accordance with Chapter 11.

6.6* Consequences of a Deflagration.

6.6.1 The material discharged from an enclosure during the venting of a deflagration shall be directed outside to a safe location.

6.6.2 Property damage and injury to personnel due to material ejection during venting shall be minimized or avoided by locating vented equipment outside of buildings and away from normally occupied areas. *(See Sections 7.7 and 8.9 for gases and dusts, respectively.)*

6.6.2.1 Deflagration vents shall not be located in positions closer to air intakes than the distances prescribed by the fireball length *(see Sections 7.7 and 8.9)*.

6.6.2.2 Deflagration vents shall be permitted to be located closer to buildings and normally occupied areas than the distances determined by Section 7.7 or Section 8.9, provided a documented risk assessment acceptable to the authority having jurisdiction has been performed.

6.6.2.3* Where a deflector is provided in accordance with 6.6.2.4 and 6.6.2.5, it shall be permitted to reduce the axial (front-centerline) hazard distance to 50 percent of the value calculated in 7.7.1 or 8.9.2. This method shall not be used to reduce the radial hazard distance as defined in 7.7.2 and 8.9.2.2 [115].

6.6.2.4* A deflector design shall meet all of the following criteria:

(1) The deflector for a rectangular vent shall be geometrically similar to the vent and sized with a linear scale factor of at least 1.75. For a round vent, the deflector shall be square shaped and at least 1.75 times the vent diameter.
(2) The deflector shall be inclined 45 degrees to 60 degrees from the vent axis, as shown in Figure 6.6.2.4.

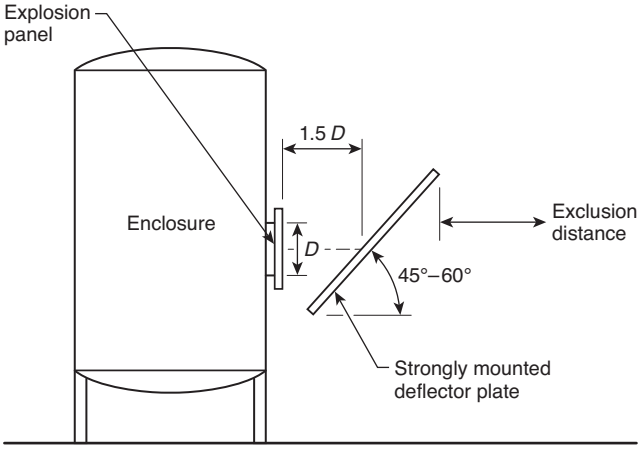

FIGURE 6.6.2.4 Design for an Installation of a Blast Deflector Plate.

(3) The centerline of the deflector shall be coincident with the vent axis.
(4) The distance from the vent opening to the deflector on the vent axis shall be 1.5D, where D is the equivalent diameter of the vent.
(5) The deflector plate shall be mounted so as to withstand the force exerted by the vented explosion, calculated as P_{red} times the deflector area.
(6) The deflector location shall not interfere with the operation of hinged vent closures.

6.6.2.5* A deflector to limit flame length shall not be used as follows:

(1) For enclosure volume greater than 20 m^3 (706 ft^3)
(2) With a tethered or translating vent closure

6.6.3 Warning signs shall be posted to indicate the location of a vent.

6.7 Effects of Vent Inertia.

6.7.1* Counterweights and insulation added to panels shall be included in the total mass.

Copyright 2014 National Fire Protection Association (NFPA). Licensed, by agreement, for individual use and download on October 4, 2014 to LEADER and READER for designated user PATTARAPORN SRITRAKOOL. No other reproduction or transmission in any form permitted without written permission of NFPA. For inquires or to report unauthorized use, contact licensing@nfpa.org.

6.7.2* A vent closure shall have low mass to minimize inertia, thereby reducing opening time.

6.7.3 If the total mass of a closure divided by the area of the vent opening does not exceed the panel densities calculated by Equation 7.3.2 and Equation 8.2.7.2 (for gas and dust, respectively), all vent area correlations presented in this standard shall be permitted to be used without correction [111].

6.7.4* Hinged closures shall be permitted to be used, provided the following conditions are met:

(1) There are no obstructions in the path of the closure that prevent it from opening.
(2) Operation of the closure is not restrained by corrosion, sticky process materials, or paint.

6.8 Effects of Vent Discharge Ducts.

6.8.1 If it is necessary to locate enclosures with deflagration vents inside of buildings, vent ducts shall be used to direct vented material from the enclosure to the outdoors.

6.8.2 A vent duct shall have a cross-sectional area at least as great as that of the vent itself but shall be limited to no more than 150 percent of the vent itself at any point in the vent duct.

6.8.3 When either a single enclosure or multiple close-coupled modular enclosures with a common inlet duct are protected by multiple deflagration vents, it shall be permitted to manifold multiple vent discharges within a single vent discharge duct under the following conditions:

(1) Each vent closure has the same nominal shape, area, inertia, and P_{stat}.
(2) Each vent discharge duct connects individually to a safe discharge location.
(3) The vent discharge duct has a single continuous inlet perimeter without branch connections.
(4) The vent discharge duct cross-sectional area is everywhere less than or equal to 1.5 times the total manifolded vent area *(see Figure 6.8.3)*.

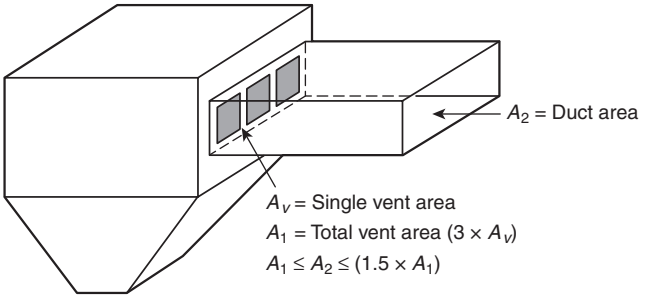

FIGURE 6.8.3 Example Range of Vent Duct Area for Manifolded Vent Duct.

6.8.4 When either a single enclosure or multiple close-coupled modular enclosures with a common inlet duct are protected by multiple deflagration vents, it shall be permitted to provide individual vent discharge ducts for each vent under the following conditions:

(1) Each vent closure has the same shape, area, inertia, and P_{stat}.
(2) Each vent discharge duct connects individually to a safe discharge location.
(3) Each vent discharge duct cross-sectional area is everywhere less than or equal to 1.5 times the vent area.
(4) Each vent discharge duct has the same nominal cross-sectional area and configuration.
(5) Corrections for vent discharge duct effects use the longest duct length for all ducts.

6.8.5* Vent area calculations shall include the effects of vent ducts. *(See Sections 7.4 and 8.5 for gases and dusts, respectively.)*

6.8.6 Vent ducts and nozzles with total lengths of less than one hydraulic diameter, relative to the calculated installed vent area, irrespective of the duct area, shall not require a correction to increase the vent area.

6.8.7 Ducts that are used to direct vented gases from the vent to the outside of a building shall be of noncombustible construction and shall be strong enough to withstand the expected P_{red}.

6.8.7.1 When vent ducts include bends, the support calculations shall include reaction forces based on the expected P_{red}.

6.8.7.2* Where vent ducts include bends, they shall be long radius.

6.9* Venting with Flame Arresting and Particulate Retention.

6.9.1* Where external venting is not feasible or desirable, such as where the location of equipment outdoors or adjacent to exterior walls is impractical, or where ducting is too long to be effective, a device that operates on the principles of flame arresting and particulate retention shall be permitted to be used.

6.9.2 These devices shall be listed or approved and shall be considered only for use within the tested range of K_{St}, dust loading, dust type, enclosure volume, and P_{red}.

6.9.3* The deflagration venting area provided for the protected enclosure shall be increased to compensate for the reduction in venting efficiency due to the presence of the device.

6.9.4* Limitations. The following limitations shall apply:

(1) Where a flame-arresting vent system and a particulate retention vent system are used inside a building, a documented risk analysis shall be performed to ensure safe installation. Considerations shall include, but are not limited to, the following:
    (a) Proximity of personnel
    (b) Volume of room
    (c) Possibility of combustible mixtures exterior to the equipment
    (d) Possible toxic gaseous and particulate emissions
(2) A flame-arresting vent system and a particulate retention vent system shall be sized to ensure that P_{red} remains within the enclosure design limits.

6.9.5* The areas adjacent to the discharge point shall be clear of combustible dusts.

6.9.6* All devices shall be equipped with an indicating sensor that shall notify the user upon activation of the device.

6.9.7* Flame-arresting vent devices without particulate retention shall be used only where a restricted area around the device has been identified and access during operation of the protected equipment is prohibited.

6.9.7.1 The restricted area shall be based on the external volume that can be filled with an explosible dust-air cloud during the venting process.

Copyright 2014 National Fire Protection Association (NFPA). Licensed, by agreement, for individual use and download on October 4, 2014 to LEADER and READER for designated user PATTARAPORN SRITRAKOOL. No other reproduction or transmission in any form permitted without written permission of NFPA. For inquires or to report unauthorized use, contact licensing@nfpa.org.

6.9.7.2 The restricted area shall be identified as an electrically classified (hazardous) area in accordance with *NFPA 70, National Electrical Code*.

6.9.7.3 There shall be no normally present ignition sources in the restricted area, including, but not limited to, hot surfaces exceeding the auto-ignition temperature and open flames.

6.9.8* Devices without particulate retention elements that reset after relieving pressure shall be inspected after a deflagration to ensure that the design performance has not been affected.

Chapter 7 Venting Deflagrations of Gas Mixtures and Mists

7.1 Introduction.

7.1.1* This chapter shall apply to the design of deflagration vents for enclosures that contain a flammable gas or combustible mist and that have an L/D of ≤5.

7.1.1.1 This chapter shall be used in conjunction with the information contained in the rest of this standard.

7.1.1.2 Chapter 6 and 3.3.32.1 shall be reviewed before determining the value of P_{red} to be used in this chapter.

7.1.2* The design of a deflagration vent for an enclosure containing a combustible mist shall be based on a value of S_u equal to 0.46 m/s unless a value of S_u applicable to the mist of a particular substance is determined by test.

7.2 Venting by Means of Low Inertia Vent Closures.

7.2.1 When $P_{red} \le 0.5$ bar, the minimum required vent area, A_{v0}, shall be determined by Equation 7.2.1a and Equation 7.2.1b:

$$A_{v0} = \frac{A_s C}{\sqrt{P_{red}}} \qquad \textbf{(7.2.1a)}$$

$$C = \frac{S_u \rho_u \lambda}{2 G_u C_d}\left[\left(\frac{P_{max}+1}{P_0+1}\right)^{1/\gamma b} - 1\right](P_0+1)^{1/2} \qquad \textbf{(7.2.1b)}$$

where:

A_{v0} = the vent area calculated from Equation 7.2.1a (m^2)
A_s = the enclosure internal surface area (m^2)
P_{red} = the maximum pressure developed in a vented enclosure during a vented deflagration (bar-g)
S_u = fundamental burning velocity of gas-air mixture (m/s)
ρ_u = mass density of unburned gas-air mixture (kg/m^3) = 1.2 for flammable gases with stoichiometric concentrations less than 5 vol%, and an initial temperature of 20°C
λ = ratio of gas-air mixture burning velocity accounting for turbulence and flame instabilities in vented deflagration to the fundamental (laminar) burning velocity
G_u = unburned gas-air mixture sonic flow mass flux = 230.1 kg/m^2-s for an enclosure initial temperature of 20°C
C_d = vent flow discharge coefficient
P_{max} = the maximum pressure developed in a contained deflagration by ignition of the same gas-air mixture (bar-g)
P_0 = the enclosure pressure prior to ignition (bar-g)
γ_b = ratio of specific heats for burned gas-air mixture = 1.1 to 1.2, depending on the gas mixture

7.2.1.1 The C value for flammable gases and vapors with a P_{max} value less than 9 bar and a stoichiometric (near worst case) fuel concentration no greater than about 10 percent shall be permitted to be calculated using Equation 7.2.1.1:

$$C = 0.0223 \lambda S_u \text{bar}^{1/2} \text{ for } S_u \text{ in m/s} \qquad \textbf{(7.2.1.1)}$$

7.2.1.2 The value of P_{stat} shall be less than P_{red} as specified for the following conditions:

(1) For $P_{red} \le 0.1$ bar (1.5 psi), $P_{stat} \le P_{red} - 0.024$ bar (50 psf).
(2) For $P_{red} > 0.1$ bar (1.5 psi), $P_{stat} < 0.75\ P_{red}$.

7.2.2 When $P_{red} > 0.5$ bar, the minimum required vent area, A_{v0}, shall be determined from Equation 7.2.2a and Equation 7.2.2b:

$$A_{v0} = A_s \frac{\left[1 - \left(\frac{P_{red+1}}{P_{max+1}}\right)^{1/\gamma b}\right]}{\left[\left(\frac{P_{red+1}}{P_{max+1}}\right)^{1/\gamma b} - \delta\right]} \frac{S_u \rho_u}{G_u} \frac{\lambda}{C_d} \qquad \textbf{(7.2.2a)}$$

$$\delta = \frac{\left(\frac{P_{stat}+1}{P_0+1}\right)^{1/\gamma b} - 1}{\left(\frac{P_{max}+1}{P_0+1}\right)^{1/\gamma b} - 1} \qquad \textbf{(7.2.2b)}$$

where:

P_{stat} = nominal vent deployment or burst pressure (bar-g)

7.2.2.1 The internal surface area, A_s, in Equation 7.2.2a shall be determined according to 7.2.5.

7.2.2.2* The burning velocity, S_u, shall be the maximum value for any gas concentration unless a documented hazard analysis shows that there is not a sufficient amount of gas to develop such a concentration.

7.2.2.3 The value of C_d shall be 0.70 unless the vent occupies an entire wall of the enclosure, in which case a value of 0.80 shall be permitted to be used.

7.2.3 The value of λ for the gas and particular enclosure shall be determined according to 7.2.6.

7.2.4 The L/D of the enclosure shall be determined according to Section 6.4.

7.2.5* Calculation of Internal Surface Area.

7.2.5.1* The internal surface area, A_s, shall include the total area that constitutes the perimeter surfaces of the enclosure that is being protected.

7.2.5.1.1 Nonstructural internal partitions that cannot withstand the expected pressure shall not be considered to be part of the enclosure surface area.

7.2.5.1.2 The enclosure internal surface area, A_S, in Equation 7.2.2 includes the roof or ceiling, walls, floor, and vent area and shall be based on simple geometric figures.

7.2.5.1.3 Surface corrugations and minor deviations from the simplest shapes shall not be taken into account.

7.2.5.1.4 Regular geometric deviations, such as saw-toothed roofs, shall be permitted to be "averaged" by adding the contributed volume to that of the major structure and calculating A_S for the basic geometry of the major structure.

7.2.5.1.5* The internal surface of any adjoining rooms shall be included.

Copyright 2014 National Fire Protection Association (NFPA). Licensed, by agreement, for individual use and download on October 4, 2014 to LEADER and READER for designated user PATTARAPORN SRITRAKOOL. No other reproduction or transmission in any form permitted without written permission of NFPA. For inquires or to report unauthorized use, contact licensing@nfpa.org.

7.2.5.2 The surface area of equipment and contained structures shall be neglected.

7.2.6* Determination of Turbulent Flame Enhancement Factor, λ.

7.2.6.1 The baseline value, λ_0, of λ shall be calculated from Equations 7.2.6.1a through 7.2.6.1f:

$$\varphi_1 = \begin{cases} 1, \ if \ \ \mathrm{Re}_f < 4000 \\ \left(\dfrac{\mathrm{Re}_f}{4000}\right)^{\theta}, \ if \ \ \mathrm{Re}_f \geq 4000 \end{cases} \qquad \textbf{(7.2.6.1a)}$$

$$\mathrm{Re}_f = \frac{\rho_u S_u (D_{he}/2)}{\mu_u} \qquad \textbf{(7.2.6.1b)}$$

$$\varphi_2 = \max\left\{1, \ \beta_1 \left(\frac{\mathrm{Re}_v}{10^6}\right)^{\beta_2 / S_u}\right\} \qquad \textbf{(7.2.6.1c)}$$

$$\mathrm{Re}_v = \frac{\rho_u u_v (D_v/2)}{\mu_u} \qquad \textbf{(7.2.6.1d)}$$

$$u_v = \begin{cases} \sqrt{\dfrac{2 \cdot 10^5 P_{red}}{\rho_u}}, \ if \ \ P_{red} < 0.9 \text{ bar} \\ a_u, \ if \ \ P_{red} \geq 0.9 \text{ bar} \end{cases} \qquad \textbf{(7.2.6.1e)}$$

$$\lambda_0 = \varphi_1 \varphi_2 \qquad \textbf{(7.2.6.1f)}$$

where:

ρ_u = mass density of unburned gas-air mixture (kg/m^3) = 1.2 for flammable gases with stoichiometric concentrations less than 5 vol%, and an initial temperature of 20°C
S_u = fundamental burning velocity of gas-air mixture (m/s)
D_{he} = the enclosure hydraulic equivalent diameter as determined in Chapter 6 (m)
μ_u = the unburned gas-air mixture dynamic velocity = 1.8×10^{-5} kg/m-s for gas concentrations less than 5 vol% at ambient temperatures
β_1 = 1.23
β_2 = 0.0487 m/s
D_v = the vent diameter as determined through iterative calculation (m)
P_{red} = the maximum pressure developed in a vented enclosure during a vented deflagration (bar-g)
a_u = the unburned gas-air mixture sound speed = 343 m/s for gas concentrations less than 5 vol% at ambient temperatures
θ = 0.39

7.2.6.2 The total external surface area, A_{obs}, of the following equipment and internal structures that can be in the enclosure shall be estimated:

(1) Piping, tubing, and conduit with diameters greater than ½ in.
(2) Structural columns, beams, and joists
(3) Stairways and railings
(4) Equipment with a characteristic dimension in the range of 2 in. to 20 in. (5.1 cm to 51 cm)

7.2.6.3 When $A_{obs} < 0.4A_S$, λ_1 shall be equal to λ_0 as determined in 7.2.6.1.

7.2.6.4 When $A_{obs} > 0.4A_S$, λ_1 shall be determined as follows:

$$\lambda_1 = \lambda_0 (0.6 + A_{obs}/A_S) \qquad \textbf{(7.2.6.4)}$$

7.2.6.5 For L/D values less than 2.5, λ shall be set equal to λ_1.

7.2.6.6 For L/D values from 2.5 to 5 and for P_{red} no higher than 2 bar, λ shall be calculated as follows:

$$\lambda = \lambda_1 \left[1 + \left(\frac{L/D}{2.5} - 1\right)^2\right] \qquad \textbf{(7.2.6.6)}$$

7.2.6.7 Equations for determining λ shall be subject to the following limitations:

(1) $S_u < 3$ m/s (300 cm/s).
(2) $P_{max} < 10$ bar.
(3) The maximum air velocity in the enclosure prior to ignition is no greater than 5 m/s.
(4) The enclosure is isolated from possible flame jet ignition and pressures caused by a deflagration in an interconnected enclosure.

7.2.6.8 For long pipes or process ducts where L/D is greater than 5, the requirements of Chapter 9 shall be used.

7.2.6.9 Methods to Reduce Flame Enhancement.

7.2.6.9.1 The value of λ shall be permitted to be reduced for gas deflagrations in relatively unobstructed enclosures by the installation of noncombustible, acoustically absorbing wall linings, provided that large-scale test data confirm the reduction.

7.2.6.9.2 The tests shall be conducted with the highest anticipated turbulence levels and with the proposed wall lining material and thickness.

7.2.7 Partial Volume Effects.

7.2.7.1 When a documented hazard analysis demonstrates that there is insufficient gas in the enclosure to form a stoichiometric gas-air mixture occupying the entire enclosure volume, the vent area, A_{v0}, calculated from Equation 7.2.2a shall be permitted to be reduced as described in 7.2.7.3.

7.2.7.2 A partial volume fill fraction, X_r, shall be calculated as follows:

$$X_r = \frac{V_{gas}/V_{enc}}{x_{st}} \qquad \textbf{(7.2.7.2)}$$

where:

V_{gas} = maximum volume of gas that can be mixed with air in the enclosure
V_{enc} = enclosure volume
x_{st} = stoichiometric volume concentration of gas

7.2.7.3 If $X_r < 1$, the minimum required vent area, A_{v1} shall be calculated from the following equation:

$$A_{v1} = A_{v0} X_r^{-1/3} \cdot \sqrt{\frac{X_r - \Pi}{1 - \Pi}} \qquad \textbf{(7.2.7.3)}$$

where:

A_{v1} = vent area for partial volume deflagration
A_{v0} = vent area for full volume deflagration as determined from Equation 7.2.1a or 7.2.2a
X_r = fill fraction > Π
Π = P_{red}/P_{max}

Copyright 2014 National Fire Protection Association (NFPA). Licensed, by agreement, for individual use and download on October 4, 2014 to LEADER and READER for designated user PATTARAPORN SRITRAKOOL. No other reproduction or transmission in any form permitted without written permission of NFPA. For inquires or to report unauthorized use, contact licensing@nfpa.org.

7.3 Effects of Panel Inertia.

7.3.1* When the mass of the vent panel ≤ 40 kg/m^2, Equation 7.3.2 shall be used to determine if an incremental increase in vent area is needed, and Equation 7.3.3 shall be used to determine the value of that increase.

7.3.2 The vent area determined in 7.2.7 shall be adjusted for vent mass when the vent mass exceeds M_T as calculated in Equation 7.3.2:

$$M_T = \left[\frac{P_{red}^{0.2} \cdot n^{0.3} \cdot V}{(S_u \cdot \lambda)^{0.5}} \right]^{1.67} \quad \textbf{(7.3.2)}$$

where:
M_T = threshold mass (kg/m^2)
P_{red} = the maximum pressure developed in a vented enclosure during a vented deflagration (bar-g)
n = number of panels
V = enclosure volume (>1 m^3)

7.3.3 For $M > M_T$, the required vent area, A_{v2}, shall be calculated as follows:

$$A_{v2} = A_{v1} \cdot F_{SH} \left[1 + \frac{(0.05) \cdot M^{0.6} \cdot (S_u \cdot \lambda)^{0.5}}{n^{0.3} \cdot V \cdot P_{red}^{0.2}} \right] \quad \textbf{(7.3.3)}$$

where:
M = mass of vent panel (kg/m^2)
A_{v1} = vent area determined in 7.2.7 (m^2)
F_{SH} = vent closure shape factor as defined in Chapter 8

7.4* Effects of Vent Ducts.

7.4.1* Where Equations 7.2.6, 7.2.6.4, 7.3.2, and 7.3.3 are used with vent ducting, a lower value shall be used in place of P_{red}.

7.4.2 Duct lengths shorter than 3 m (10 ft) and shorter than four duct hydraulic diameters in length shall be treated using Curve A in Figure 7.4.2. For ducts exceeding either of these limitations, Curve B shall be used.

7.4.2.1 For vent ducts with lengths of less than 3 m (10 ft) and shorter than four duct hydraulic diameters, the following equation shall be used to determine P'_{red}:

$$P'_{red} = 0.779 \cdot (P_{red})^{1.161} \quad \textbf{(7.4.2.1)}$$

7.4.2.2 For vent ducts with lengths of 3 m to 6 m (10 ft to 20 ft) or shorter vent ducts longer than four duct hydraulic diameters, the following equation shall be used to determine P'_{red}:

$$P'_{red} = 0.172 \cdot (P_{red})^{1.936} \quad \textbf{(7.4.2.2)}$$

7.4.3* Duct lengths shorter than 3 m (10 ft) shall be treated as 3 m (10 ft) in length for calculation purposes.

7.4.3.1 If longer ducts are needed, P'_{red} shall be determined by appropriate tests.

7.4.3.2 Vent ducts and nozzles with total lengths of less than one hydraulic diameter shall not require a correction.

7.4.4 The vented material discharged from an enclosure during a deflagration shall be directed to a safe outside location to avoid injury to personnel and to minimize property damage. *(See Section 6.8.)*

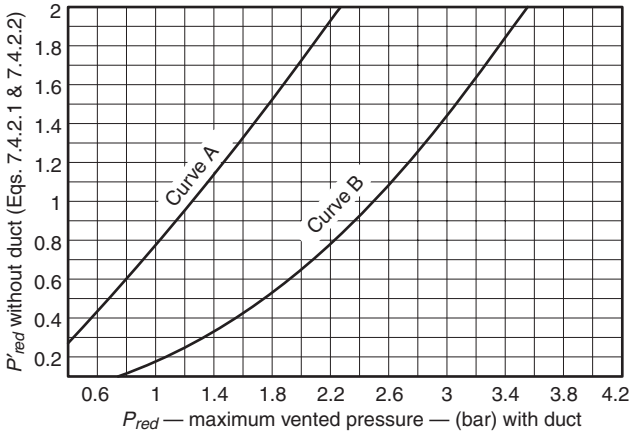

Notes:
1. Curve A to be used for duct length < 3 m (10 ft) and less than four duct hydraulic diameters.
2. Curve B to be used for duct length of 3 m to 6 m (10 ft to 20 ft) or of four or more duct hydraulic diameters. Curve B is not valid for duct lengths > 6 m (20 ft).
3. For both Curve A and Curve B: Unlike a piping system described in Chapter 9 where flammable vapor is presumed present, in this situation flammable vapor is not initially present in the vent duct.

FIGURE 7.4.2 Maximum Pressure Developed During Venting of Gas, With and Without Vent Ducts.

7.4.5* If it is necessary to locate enclosures that need deflagration venting inside buildings, vents shall not discharge within the building.

7.4.5.1* Vent ducts shall be used to direct vented material from the enclosure to the outdoors.

7.4.6* A vent duct shall have a cross section at least as great as that of the vent itself.

7.4.7* Vent ducts shall be as straight as possible.

7.4.7.1 If bends are unavoidable, they shall be as shallow-angled as practical (that is, they shall have as long a radius as practical).

7.4.8 Where vent ducts vent through the roof of an enclosure, consideration shall be given to climatic conditions. *(See Section 6.5.)*

7.5 Effects of Initial Elevated Pressure.

7.5.1 For calculations that involve elevated pressure, the procedure in 7.5.1.1 and 7.5.1.2 shall be used.

7.5.1.1* The value that is used for P_0 shall be chosen to represent the likely maximum pressure at which a flammable gas mixture can exist at the time of ignition. It shall be permitted to be as low as the normal operating pressure.

7.5.1.2* The enclosure shall be located to accommodate the blast wave.

7.6 Vent Design. See also Sections 6.5 through 6.7.

7.6.1 If an enclosure is subdivided into compartments by walls, partitions, floors, or ceilings, each compartment that contains an explosion hazard shall be provided with its own vent.

Copyright 2014 National Fire Protection Association (NFPA). Licensed, by agreement, for individual use and download on October 4, 2014 to LEADER and READER for designated user PATTARAPORN SRITRAKOOL. No other reproduction or transmission in any form permitted without written permission of NFPA. For inquires or to report unauthorized use, contact licensing@nfpa.org.

7.6.2* Each closure shall be designed and installed to move freely without interference by obstructions such as ductwork or piping.

7.6.3* Guarding shall be provided to prevent personnel from falling against vent closures.

7.6.4* The vent area for a building shall be distributed as evenly as possible over the building's skin.

7.6.5 Vent closures shall open dependably.

7.6.5.1 The proper operation of vent closures shall not be hindered by deposits of snow, ice, paint, sticky materials, or polymers.

7.6.5.2 Operation of vent closures shall not be prevented by corrosion or by objects that obstruct the opening of the vent closure, such as piping, air-conditioning ducts, or structural steel.

7.6.5.3 Vent closures shall withstand exposure to the materials and process conditions within the enclosure that is being protected.

7.6.5.4 Vent closures shall reliably withstand fluctuating pressure differentials that are below the design release pressure and shall also withstand any vibration or other mechanical forces to which they can be subjected.

7.6.6 When multiple vents are provided, the vent area shall be distributed symmetrically and evenly on the enclosure external surfaces.

7.7* Fireball Dimensions.

7.7.1 The hazard zone from a vented gas deflagration shall be calculated by the following equation:

$$D = 3.1 \cdot \left(\frac{V}{n}\right)^{0.402} \qquad \textbf{(7.7.1)}$$

where:
D = axial distance (front-centerline) from vent (m)
V = volume of vented enclosure (m^3)
n = number of evenly distributed vents

7.7.2 The hazard zone measured radially (to the sides, measured from the centerline of the vent) shall be calculated as $0.5D$.

7.8 Deflagration Venting of Enclosures Interconnected with Pipelines. For interconnected enclosures, explosion isolation or suppression shall be provided in accordance with NFPA 69, *Standard on Explosion Prevention Systems*, unless a documented risk assessment acceptable to the authority having jurisdiction demonstrates that increased vent area prevents enclosure failure. *(See A.8.12.2.)*

Chapter 8 Venting of Deflagrations of Dusts and Hybrid Mixtures

8.1 Introduction.

8.1.1 This chapter shall apply to all enclosures with L/D less than or equal to six handling combustible dusts or hybrid mixtures.

8.1.1.1 This chapter shall be used with the information contained in the rest of this standard.

8.1.1.2 In particular, Chapters 6, 7, 10, and 11 shall be reviewed before the information in this chapter is applied.

8.1.1.3 This chapter provides a number of equations and calculation procedures that shall be used to treat a variety of vent sizing applications.

8.1.1.4 The general flowchart given in Figure 8.1.1.4 shall be used to select applicable vent sizing methods.

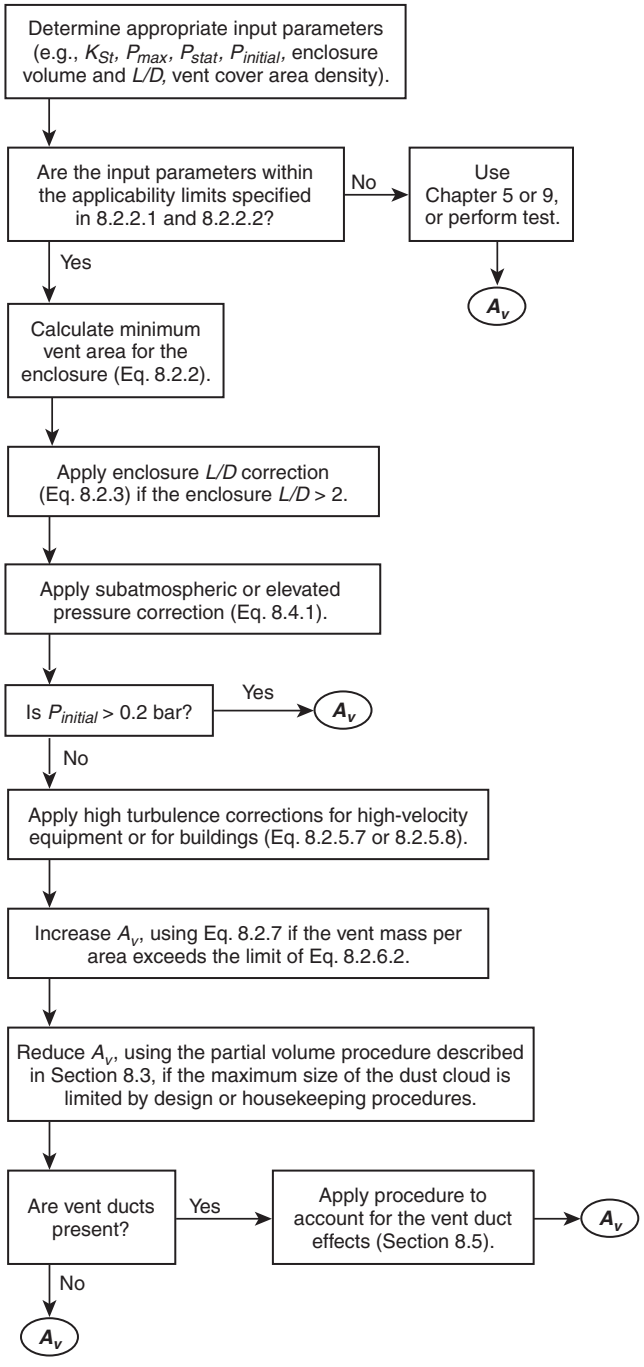

FIGURE 8.1.1.4 Dust Explosion Vent Sizing Calculation Flowchart.

Copyright 2014 National Fire Protection Association (NFPA). Licensed, by agreement, for individual use and download on October 4, 2014 to LEADER and READER for designated user PATTARAPORN SRITRAKOOL. No other reproduction or transmission in any form permitted without written permission of NFPA. For inquires or to report unauthorized use, contact licensing@nfpa.org.

8.1.2* Where actual material is not available for test, vent sizing shall be permitted to be based on K_{St} values for similar composition materials of particle size no greater than the specified particle size range per the chosen standard: ASTM E 1226, *Standard Test Method for Explosibility of Dust Clouds,* or ISO 6184-1, *Explosion Protection Systems — Part 1: Determination of Explosion Indices of Combustible Dust in Air.*

8.1.2.1 Where the actual material intended to be produced is smaller than the size determined by 8.1.2, tests shall be performed near the intended particle size.

8.1.2.2 When the actual material is available, the K_{St} shall be verified by test.

8.2 Venting by Means of Low-Inertia Vent Closures.

8.2.1 The *L/D* of the enclosure shall be determined according to Section 6.4.

8.2.2 Equation 8.2.2 shall be used to calculate the minimum necessary vent area, A_{v0}:

$$A_{v0} = 1 \cdot 10^{-4} \cdot \left(1 + 1.54 \cdot P_{stat}^{4/3}\right) \cdot K_{St} \cdot V^{3/4} \cdot \sqrt{\frac{P_{max}}{P_{red}} - 1} \qquad \textbf{(8.2.2)}$$

where:
A_{v0} = vent area (m^2)
P_{stat} = nominal static burst pressure of the vent (bar)
K_{St} = deflagration index (bar-m/s)
V = enclosure volume (m^3)
P_{max} = maximum pressure of a deflagration (bar-g)
P_{red} = reduced pressure after deflagration venting (bar)
[115]

8.2.2.1 Equation 8.2.2 shall apply to initial pressures before ignition of 1 bar-abs ± 0.2 bar.

8.2.2.2 The following limitations shall be applicable to Equation 8.2.2:

(1) 5 bar ≤ P_{max} ≤ 12 bar
(2) 10 bar-m/s ≤ K_{St} ≤ 800 bar-m/s
(3) 0.1 m^3 ≤ V ≤ 10,000 m^3
(4) P_{stat} ≤ 0.75 bar

8.2.2.3 When *L/D* is less than or equal to 2, A_{v1} shall be set equal to A_{v0}.

8.2.3 For *L/D* values greater than 2 and less than or equal to 6, the required vent area, A_{v1}, shall be calculated as follows (where $\exp(A) = e^A$, e is the base of the natural logarithm [114]):

$$A_{v1} = A_{v0} \cdot \left[1 + 0.6 \cdot \left(\frac{L}{D} - 2\right)^{0.75} \cdot \exp\left(-0.95 \cdot P_{red}^{2}\right)\right] \qquad \textbf{(8.2.3)}$$

8.2.3.1* It shall be permitted to extend Equation 8.2.3 to values of *L/D* of 8 for top-fed bins, hoppers, and silos, provided the calculated required vent area, after application of all correction factors, does not exceed the enclosure cross-sectional area.

8.2.4 For situations where vents can be distributed along the major axis of the enclosure, Equation 8.2.2 and Equation 8.2.3 shall be permitted to be applied where L is the spacing between vents along the major axis.

8.2.5 Three different general equations (Equations 8.2.3, 8.2.6.7, and 8.2.6.8) shall be applied to the determination of dust deflagration minimum required vent areas.

8.2.5.1 Equation 8.2.3, which produces the smallest required vent areas, shall apply to dust handling and storage equipment within which the average air axial velocity, v_{axial}, and the tangential velocity, v_{tan}, are both less than 20 m/s during all operating conditions.

8.2.5.2* For this application, average air axial velocity shall be calculated according to the following equation:

$$v = \frac{Q}{A} \qquad \textbf{(8.2.5.2)}$$

where:
v = average axial gas velocity (m/s)
Q = volumetric air flow rate (m^3/s)
A = average cross-sectional area of the flow path (m^2)
[118,119]

8.2.5.3* If a circumferential (tangential) air velocity is in the equipment, v_{tan} shall be given by 0.5 v_{tan_max}, where v_{tan_max} is the maximum tangential air velocity in the equipment.

8.2.5.4 Values of Q, v_{axial}, v_{tan_max}, and v_{tan} shall be measured or calculated by engineers familiar with the equipment design and operation.

8.2.5.5 The measurements or calculations shall be documented and made available to vent designers and the authority having jurisdiction.

8.2.5.6 When the maximum values derived for v_{axial} and v_{tan} are less than 20 m/s, A_{v2} shall be set equal to A_{vep}.

8.2.5.7* When either v_{axial} or v_{tan} is larger than 20 m/s, A_{v2} shall be determined from the following equation where *max* (*A, B*) = maximum value of either *A* or *B* [118,119]:

$$A_{v2} = \left[1 + \frac{max\left(v_{axial}, v_{\tan}\right) - 20}{36} \cdot 0.7\right] \cdot A_{vep} \qquad \textbf{(8.2.5.7)}$$

8.2.5.8* Vent areas for buildings in which there is a dust explosion hazard shall be determined from Equation 8.2.5.8 [118,119]:

$$A_{v2} = 1.7 \cdot A_{vep} \qquad \textbf{(8.2.5.8)}$$

8.2.5.9 The required vent areas for these buildings shall be permitted to be reduced through use of the partial volume Equation 8.3.1.

8.2.6* Effects of Panel Inertia.

8.2.6.1 When the mass of the vent panel is less than or equal to 40 kg/m^2, Equation 8.2.6.2 shall be used to determine whether an incremental increase in vent area is needed and the requirements of 8.2.7 shall be used to determine the value of that increase.

8.2.6.2 The vent area shall be adjusted for vent mass where the vent mass exceeds M_T as calculated in Equation 8.2.6.2:

$$M_T = \left[6.67 \cdot \left(P_{red}^{0.2}\right) \cdot \left(n^{0.3}\right) \cdot \left(\frac{V}{K_{St}^{0.5}}\right)\right]^{1.67} \qquad \textbf{(8.2.6.2)}$$

where:
M_T = threshold mass (kg/m^2)
P_{red} = reduced pressure after deflagration venting (bar)
n = number of panels
V = volume (m^3)

Copyright 2014 National Fire Protection Association (NFPA). Licensed, by agreement, for individual use and download on October 4, 2014 to LEADER and READER for designated user PATTARAPORN SRITRAKOOL. No other reproduction or transmission in any form permitted without written permission of NFPA. For inquires or to report unauthorized use, contact licensing@nfpa.org.

8.2.6.3 Where M is greater than 40 kg/m^2, it shall be permitted to use the procedure provided in Annex G.

8.2.7 For $M > M_T$, the required vent area A_{v3}, shall be calculated as follows:

$$A_{v3} = F_{SH}\left[1+(0.0075)\cdot M^{0.6}\cdot\left(\frac{K_{St}^{0.5}}{N^{0.3}VP_{red}^{0.2}}\right)\right]\cdot A_{v2} \quad \textbf{(8.2.7)}$$

where:

F_{SH} = 1 for translating panels or 1.1 for hinged panels
M = mass of vent panel (kg/m^2)
A_{v2} = vent area calculated by 8.2.5.6, Equation 8.2.5.7, or Equation 8.2.5.8, as applicable

8.2.7.1 If $K_{St} < 75$ bar-m/s, $K_{St} = 75$ shall be used in Equation 8.2.7.

8.2.8 Where $M \le M_T$, A_{v3} shall be set equal to A_{v2}.

8.3* Effects of Partial Volume.

8.3.1 When the volume fill fraction, X_r, can be determined for a worst-case explosion scenario, the minimum required vent area shall be permitted to be calculated from the following equation:

$$A_{v4} = A_{v3}\cdot X_r^{-1/3}\cdot\sqrt{\frac{X_r-\prod}{1-\prod}} \quad \textbf{(8.3.1)}$$

where:

A_{v4} = vent area for partial volume deflagration
A_{v3} = vent area for full volume deflagration as determined from Equation 8.2.7 or from 8.2.8
X_r = fill fraction > $\prod$
$\prod$ = P_{red}/P_{max}

8.3.2* If $X_r \le \prod$, deflagration venting shall not be required.

8.3.2.1 Where partial volume is not applied, A_{v4} shall be set equal to A_{v3}.

8.3.3* Process Equipment Partial Volumes. Process equipment involving nonsolvent drying shall be permitted to use partial volume venting in accordance with Equation 8.3.1.

8.3.3.1 In applications involving dryers with recirculation of dry product, the fill fraction shall be taken as 1.0.

8.3.3.2 Furthermore, if the solvent is flammable, hybrid deflagration K_{St} values shall be determined.

8.3.3.3 In applications such as a spray dryer or fluidized bed dryer, the specific fill fraction to be used for vent design shall be based on measurements with representative equipment and process materials.

8.3.3.4 In applications involving spray dryers where a partial volume venting is calculated in accordance with Equation 8.3.1, the vent shall be mounted within the chosen partial volume zone of the dryer that contains the driest fraction of material.

8.3.3.5 In these applications, the determination of X_r shall be documented and submitted to the authority having jurisdiction for review and concurrence.

8.3.4 Building Partial Volumes. *(See Annex I.)*

8.3.4.1 This subsection shall apply to large process buildings in which a dust explosion hazard is associated with combustible material deposits on the floor and other surfaces, and with the material contained in process equipment.

8.3.4.2 The minimum required deflagration vent area for the building dust explosion hazard shall be based either on the full building volume or on a partial volume determined as follows:

(1) Collect at least three representative samples of the floor dust from either the actual building or a facility with similar process equipment and materials. The samples shall be obtained from measured floor areas, A_{fs}, that are each 0.37 m^2 (4 ft^2) or larger.
(2) Weigh each sample and calculate the average mass, $\bar{M}_f$ (grams), of the floor samples.
(3) Collect at least two representative samples from measured sample areas, A_{ss}, on other surfaces with dust deposits. These surfaces on any plane could include beams, shelves, and external surfaces of process equipment and structures. Calculate the total area, A_{sur}, of these surfaces with dust deposits.
(4) Weigh each sample and calculate the average mass, $\bar{M}_f$ (grams), of the surface samples.
(5) Determine the total mass, M_e, of combustible dust that could be released from the process equipment in the building.
(6) Test the dust samples per ASTM E 1226, *Standard Test Method for Explosibility of Dust Clouds*, to determine P_{max}, K_{St}, and the worst-case concentration, c_w, corresponding to the largest value of K_{St}.
(7) Using the highest values of P_{max} and K_{St}, the building volume, V, and $\prod = P_{red}/P_{max}$, use Equation 8.2.7 or 8.2.8 to calculate the vent area, A_{v3}, needed if the full building volume were filled with combustible dust.
(8) Calculate the worst-case building partial volume fraction, X_r, in accordance with 8.3.4.3.
(9) If the calculated $X_r > 1$, the minimum required vent area is equal to A_{v3} .
   (a) If $X_r \le \prod$, no deflagration venting is needed.
   (b) If $1 > X_r > \prod$, the minimum required vent area, A_{v4}, is calculated from Equation 8.3.1 as follows:

$$A_{v4} = A_{v3}\cdot X_r^{-1/3}\cdot\sqrt{\frac{X_r-\prod}{1-\prod}} \quad \textbf{(8.3.4.2)}$$

8.3.4.3 The worst-case building partial volume fraction, X_r, shall be calculated from the following equation:

$$X_r = \frac{\bar{M}_f\cdot A_{f\text{-}dusty}\cdot\eta_{Dfloor}}{A_{fs}\cdot V\cdot c_w} + \frac{\bar{M}_s\cdot A_{sur}\cdot\eta_{Dsur}}{A_{ss}\cdot V\cdot c_w} + \frac{M_e}{V\cdot c_w} \quad \textbf{(8.3.4.3)}$$

where:

X_r = worst-case building partial fraction
$\bar{M}_f$ = average mass of floor samples (g)
$A_{f\text{-}dusty}$ = total area of floor with dust deposits (m^2)
η_{Dfloor} = entrainment factor for floor accumulations
A_{fs} = measured floor areas (m^2)
V = building volume (m^3)
c_w = worst-case dust concentration (g/m^3)
$\bar{M}_s$ = average mass of surface samples (g)
A_{sur} = total area of surfaces with dust deposits (m^3)
η_{Dsur} = entrainment factor for surface accumulations
A_{ss} = measured sample areas of surfaces with dust deposits (m^2)
M_e = total mass of combustible dust that could be released from the process equipment in the building (g)

Copyright 2014 National Fire Protection Association (NFPA). Licensed, by agreement, for individual use and download on October 4, 2014 to LEADER and READER for designated user PATTARAPORN SRITRAKOOL. No other reproduction or transmission in any form permitted without written permission of NFPA. For inquires or to report unauthorized use, contact licensing@nfpa.org.

8.3.4.3.1 If a measured value of c_w is available, the lowest value of c_w for the various samples shall be used in Equation 8.3.4.3.

8.3.4.3.2 If a measured value of c_w is not available, a value of 200 g/m^3 shall be permitted to be used in Equation 8.3.4.3.

8.3.4.3.3* If measured values of $\bar{M}_f / A_f$ and $\bar{M}_s / A_{ss}$ are not available, and if the facility is to be maintained with dust layer thickness in accordance with NFPA 654, *Standard for the Prevention of Fire and Dust Explosions from the Manufacturing, Processing, and Handling of Combustible Particulate Solids*, an approximate value for these ratios shall be permitted to be used, based on a dust layer bulk density of 1200 kg/m^3 and a layer thickness of 0.8 mm (1/32 in.) over the entire floor area and other surfaces defined in 8.3.4.3.4.

8.3.4.3.4 The total mass of dust that could be released from process equipment in the building/room M_e, shall be determined as follows:

(1) Evaluate equipment with exposed dust accumulations, such as but not limited to screeners, open-top conveyors or conveyor belts, open packaging or shipping containers, and enclosureless dust collectors.
(2) Evaluate anticipated episodic spills from equipment in light of current housekeeping procedures and practices.
(3) Do not include material in closed packaging or shipping containers, material in enclosed silos or storage bins, or in otherwise explosion-protected equipment.

8.3.4.3.5 The entrainment factor, η_D for each representative area shall be determined by one of the following methods:

(1) Assume an entrainment factor of 1.
(2) Calculate the entrainment factor as follows:
   (a) Determine the average particle density, ρ_p for each sampled dust layer.
   (b) Determine the entrainment threshold velocity using the following equation:

$$U_t = 0.46 \cdot \rho_p^{1/3} \qquad \textbf{[8.3.4.3.5(2)(b)]}$$

where:
U_t = threshold velocity (m/s)
ρ_p = particle density (kg/m^3)

   (c) Assume a maximum free-stream velocity, U, of 50 m/s or establish a different free-stream velocity calculated from a maximum credible initiating event.
   (d) Determine a maximum entrainment rate using the following equation:

$$m'' = 0.002 \cdot \rho \cdot U \cdot \left(U^{1/2} - U_t^2 / U^{3/2}\right) \textbf{[8.3.4.3.5(2)(d)]}$$

where:
m'' = entrained mass flux (kg/m^2-s)
ρ = gas density (kg/m^3)
U = free-stream velocity (m/s) > U_t
U_t = threshold velocity (m/s)

   (e) Determine initiating event time, t, by dividing the building or enclosure longest dimension by ½ the maximum free-stream velocity.
   (f) Using the appropriate surface area, A, determine the maximum mass, M_{max}, from the presumed initiating event using the following equation:

$$M_{max} = m'' \cdot A \cdot t \qquad \textbf{[8.3.4.3.5(2)(f)]}$$

   (g) Determine the entrainment factor using the following equation:

$$\eta_D = \begin{cases} \dfrac{M_{max}}{M}, \text{ if } \dfrac{M_{max}}{M} < 1 \\ 1, \text{ if } \dfrac{M_{max}}{M} \geq 1 \end{cases} \qquad \textbf{[8.3.4.3.5(2)(g)]}$$

where:
M = average mass of the sample (g)

8.4 Effects of Initially Elevated or Subatmospheric Pressure.

8.4.1* When enclosure pressure is initially greater than 0.2 bar (20 kPa) or less than −0.2 bar (−20 kPa), A_{vep}/A_{v0} shall be determined from the following equation:

$$A_{vep} = A_{v1} \cdot \frac{\left[1 + 1.54 \cdot \left(\dfrac{P_{stat} - P_{initial}}{1 + P_{effective}}\right)^{4/3}\right] \cdot \sqrt{\dfrac{1}{\Pi_{effective}} - 1}}{\left[1 + 1.54 \cdot P_{stat}^{4/3}\right] \cdot \sqrt{\dfrac{P_{max}}{P_{red}} - 1}} \qquad \textbf{(8.4.1)}$$

where:
A_{vep} = vent area (m^2)
P_{stat} = static burst pressure of the vent (bar)
$P_{initial}$ = enclosure pressure at moment of ignition (bar)
$P_{effective}$ = ⅓ $P_{initial}$ (bar)
$\Pi_{effective}$ = $(P_{red} - P_{effective}) / (P^E_{max} - P_{effective})$
P_{red} = reduced pressure
P^E_{max} = $[(P_{max} + 1) \cdot (P_{initial} + 1) / (1 \text{ bar-abs}) - 1]$ maximum pressure of the unvented deflagration at pressure (bar)
P_{max} = maximum pressure of an unvented deflagration initially at atmospheric pressure (bar)

8.4.2* When enclosure pressure is initially less than −0.2 bar, the vent area correction in Equation 8.4.1 shall be evaluated over the range between operating pressure and atmospheric pressure and the largest vent area correction applied.

8.4.3 When enclosure pressure is initially less than −0.2 bar, it shall be permitted to use a value of 1.1 as the vent area correction for this section.

8.4.4 When enclosure pressure is initially greater than 0.2 bar, deflagration vents shall be permitted only when the following conditions are met:

(1) Vent duct length $L/D \leq 1$
(2) Panel density $M \leq M_T$ and ≤ 40 kg/m^2
(3) v_{axial} and $v_{tan} < 20$ m/s
(4) No allowance for partial volume
(5) Equation 8.4.1 used to calculate the necessary vent area adjustment

8.4.5 When the initial pressure is between −0.2 bar and 0.2 bar, A_{vep} shall be set equal to A_{v1}.

Copyright 2014 National Fire Protection Association (NFPA). Licensed, by agreement, for individual use and download on October 4, 2014 to LEADER and READER for designated user PATTARAPORN SRITRAKOOL. No other reproduction or transmission in any form permitted without written permission of NFPA. For inquires or to report unauthorized use, contact licensing@nfpa.org.

8.5* Effects of Vent Ducts.

8.5.1* If there is no vent duct, $A_{vf} = A_{v\,4}$; otherwise, the effect of vent ducts shall be calculated from the following equations:

$$A_{vf} = A_{v4} \cdot \left(1 + 1.18 \cdot E_1^{0.8} \cdot E_2^{0.4}\right) \cdot \sqrt{\frac{K}{K_0}} \qquad \textbf{(8.5.1a)}$$

$$E_1 = \frac{A_{vf} \cdot L_{duct}}{V} \qquad \textbf{(8.5.1b)}$$

$$E_2 = \frac{10^4 \cdot A_{vf}}{\left(1 + 1.54 \cdot P_{stat}^{4/3}\right) \cdot K_{St} \cdot V^{3/4}} \qquad \textbf{(8.5.1c)}$$

$$K \equiv \frac{\Delta P}{\frac{1}{2} \cdot \rho \cdot U^2} = K_{inlet} + \frac{f_D \cdot L_{duct}}{D_h} + K_{elbows} + K_{outlet} + \cdots \qquad \textbf{(8.5.1d)}$$

where:

A_{vf} = vent area required when a duct is attached to the vent opening (m^2)
$A_{v\,4}$ = vent area after adjustment for partial volume (m^2), per Equation 8.3.1
K = overall resistance coefficient of the vent duct application
K_0 = 1.5, the resistance coefficient value assumed for the test configurations that generated the data used to validate Equations 8.2.2 and 8.2.3
L_{duct} = vent duct overall length (m)
V = enclosure volume (m^3)
P_{stat} = nominal static opening pressure of the vent cover (bar)
ΔP = static pressure drop from the enclosure to the duct exit at average duct slow velocity, U (bar)
ρ = gas density (kg/m^3)
U = fluid velocity (m/s)
K_{inlet}, K_{elbows}, K_{outlet} = resistance coefficients for fittings
f_D = D'Arcy friction factor for fully turbulent flow; see A.8.5 for typical formula [114]
D_h = vent duct hydraulic diameter (m)

8.5.2 Under certain circumstances, in which there are two solutions for vent area, the smaller vent area shall be used.

8.5.3 Where these equations do not produce a solution for vent area, the design shall be modified by decreasing the vent duct length, strengthening the vessel to contain a higher P_{red}, or both.

8.5.4 Equation 8.5.1a shall not be used if the vent cover is not located at the entrance of the duct.

8.5.5 Equation 8.5.1a shall not be used if the initial pressure exceeds ±0.2 bar-g.

8.5.6 Equation 8.5.1a shall not be used if the vent duct cross-sectional area varies by more than 10 percent anywhere along the length.

8.5.7 It shall be permitted to use Equation 8.5.1a for vent ducts equipped with elbows, bird screens, and rain covers as long as the obstructions are properly accounted for through the duct resistance coefficient K.

8.5.8 It shall be permitted to use vent ducts outside the limitations of Equation 8.5.1(a) if designed in accordance with full-scale test data.

8.5.9 The maximum length of the duct shall be limited to obey the following inequality, where $\min(A, B)$ = the minimum value of either A or B:

$$L_{eff} \le \min\left[\frac{10{,}000 \cdot D}{K_{St}}, \frac{11{,}000}{K_{St}}\right] \qquad \textbf{(8.5.9)}$$

where:

$L_{eff} = \min(L_{duct}, L_{dusty})$
$L_{dusty} = (P_{max} - P_{red}) \cdot V / A_v$

8.5.10 Table 8.5.10 shall be reviewed to determine the combination rules and limitations for application of various dust models in this chapter.

Table 8.5.10 Combination Rules and Limitations for NFPA 68 Dust Models

Vent ducts	$P_{intial} \le 1.2$ bar-abs $1 \le L/D \le 6$ Allow turbulence Panel density ≤ 40 kg/m^2 Allow partial volume No elevated pressure (calculate vent duct effect last)
Partial volume	$P_{initial} \le 1.2$ bar-abs $1 \le L/D \le 6$ Allow turbulence Panel density ≤ 40 kg/m^2 Allow vent ducts No elevated pressure (calculate vent duct effect last)
Panel inertia	$P_{initial} \le 1.2$ bar-abs $1 \le L/D \le 6$ Allow turbulence Allow partial volume Allow vent ducts No elevated pressure (calculate vent duct effect last)
Elevated pressure	$1.2 < P_{initial} \le 5$ bar-abs $1 \le L/D \le 6$ Turbulence (v_{axial} and v_{tan}) < 20 m/s Panel density ≤ M_T and ≤ 40 kg/m^2 Full volume, no partial volume No vent ducts (calculate elevated pressure effect last)
Subatmospheric pressure	$P_{initial} \le 0.8$ bar-abs $1 \le L/D \le 6$ Allow turbulence Panel density ≤ 40 kg/m^2 Allow partial volume Allow vent ducts (calculate vent duct effect last)

8.6 Bins, Hoppers, and Silos.

8.6.1 Deflagration venting for bins, hoppers, and silos shall be from the top or the upper side, above the maximum level of the material contained, and shall be directed to a safe outside location *(see Section 8.9)*.

Copyright 2014 National Fire Protection Association (NFPA). Licensed, by agreement, for individual use and download on October 4, 2014 to LEADER and READER for designated user PATTARAPORN SRITRAKOOL. No other reproduction or transmission in any form permitted without written permission of NFPA. For inquires or to report unauthorized use, contact licensing@nfpa.org.

8.6.1.1* Deflagration venting shall be permitted to be through vent closures located in the roof or sidewall or by making the entire enclosure top a vent.

8.6.1.2 In all cases, the total volume of the enclosure shall be assumed to contain a suspension of the combustible dust in question.

8.6.1.3 No credit shall be taken for the enclosure being partly full of settled material.

8.6.1.4 For a multiple application, the closures shall be placed symmetrically to minimize the effects of potential reaction forces *(see 6.3.5)*.

8.6.1.5 Care shall be taken not to fill the enclosure above the bottoms of the vent panels, because large amounts of dust can blow out into the atmosphere, ignite, and form a large fireball.

8.6.2 Deflagration venting shall be permitted to be accomplished by means of vent closures located in the roof of the enclosure.

8.6.2.1 The vent operation procedures outlined in Section 6.5 shall be followed.

8.6.3* The entire enclosure top shall be permitted to be used to vent deflagrations.

8.6.3.1 Roof panels shall be as lightweight as possible and shall not be attached to internal roof supports.

8.6.3.2 API 650, *Welded Steel Tanks for Oil Storage*, shall be referenced for guidelines for the design of a frangible, welded roof joint.

8.6.3.3 Equipment, piping, and other process connections shall not restrict the roof's operation as a vent closure.

8.6.3.3.1 Equipment, piping, and other process connections shall be included in the vent panel inertia evaluation per 8.2.6.

8.6.3.4 The entire enclosure rooftop shall be labeled as an explosion vent in accordance with 11.3.4.

8.6.3.5 Access to the rooftop shall be restricted during operation of the protected enclosure.

8.6.3.6 Initial inspection shall include the roof-wall connections.

8.6.3.7 The remaining portions of the enclosure, including anchoring, shall be designed to resist the calculated P_{red}, based on the vent area provided. *(See Section 6.3.)*

8.7 Venting of Dust Collectors Using Bags, Filters, or Cartridges.

8.7.1* It shall be permitted to remove the volume occupied by the filter elements, provided the filter elements would not obstruct the free flow of hot gases, unburned material, and flame during a deflagration. Methods for achieving this objective shall include but not be limited to the following:

(1)*Separating the vent closure from the filters, usually by locating the vent closure below the filters for standard vertical filters, but other configurations include, for example, horizontal cartridges and pleated flat panel filters, which could have side or top venting. If this methodology is used, the principle of separation of vent closure from filters shall be maintained regardless of filter design and orientation.

(2)*Shortening or removing a row of filters nearest the vent closure such that the area normal to and between the filters and the vent closure equals or exceeds the vent closure area. In this case, a restraining bar shall be installed to hold back the filters to prevent them from being deflected toward and obstructing the free flow of hot gases, unburned material, or flame through the vent during a deflagration.

8.7.2 Where the volume occupied by the filter elements is removed according to 8.7.1, the method for calculating the volume occupied by the filters shall be dependent on the distance between the filters as follows and as summarized in Figure 8.7.2:

(1) For round or elliptical cross-section filters where the distance between the outer perimeters does not exceed the radius (or the minimus) of the filters, the volume can be calculated as a block to include the space between the filters.
(2) For round or elliptical cross-section filters where the distance between the outer perimeters is greater than the radius (or the minimus) of the filters, the volume can be calculated as the volume of each filter multiplied by the total number of filters.
(3) For flat panel filters (also called envelope, flat pocket filters), the volume of each filter can be calculated and multiplied by the total number of filters. Calculating the volume as a block is not permitted for flat panel filters.

8.7.3* Where the requirements of 8.7.1 are not met, the total dirty volume of the enclosure on the dirty side of the tube sheet, including the volume occupied by the filters, shall be calculated.

8.7.4 If the clean air plenum contains dust, or if the material entering the dust collector is a hybrid mixture, one of the following protection measures shall be applied:

(1) A separate vent shall be provided on the clean air side, calculated based on the clean air side volume using the methodology in Chapter 7.
(2) The clean air side gas concentration shall be evaluated for flammability and protected in accordance with NFPA 69, *Standard on Explosion Prevention Systems*.

8.8 Bucket Elevators.

8.8.1* Bucket elevators shall be classified as single-casing (single leg) or double-casing (twin leg) design.

8.8.2* Head and Boot Vents.

8.8.2.1 Vent areas shall be not less than the cross-sectional area of each leg and at a minimum shall be fitted both at the head and as close to the boot as practicable.

8.8.2.2 Where a vent is not installed directly on the boot, a vent shall be installed on each casing at a distance from the boot less than or equal to the smaller of 6 m or the additional vent spacing distance per Table 8.8.3.3.

8.8.3 Additional Casing Vents.

8.8.3.1 The owner/operator shall be permitted to choose a design P_{red} of either 0.5 or 1.0 bar.

8.8.3.2 The casing(s), head, and boot shall all be designed for the same P_{red} chosen from 8.8.3.1.

8.8.3.3* Additional vents shall be installed in each casing at center-to-center spacing distance along the elevator axis based on the bucket elevator classification, the K_{St} of the material being handled, and the design P_{red}, as given in Table 8.8.3.3.

8.8.3.4* At each vent location, the total vent area shall be not less than the cross-sectional area of each leg.

Copyright 2014 National Fire Protection Association (NFPA). Licensed, by agreement, for individual use and download on October 4, 2014 to LEADER and READER for designated user PATTARAPORN SRITRAKOOL. No other reproduction or transmission in any form permitted without written permission of NFPA. For inquires or to report unauthorized use, contact licensing@nfpa.org.

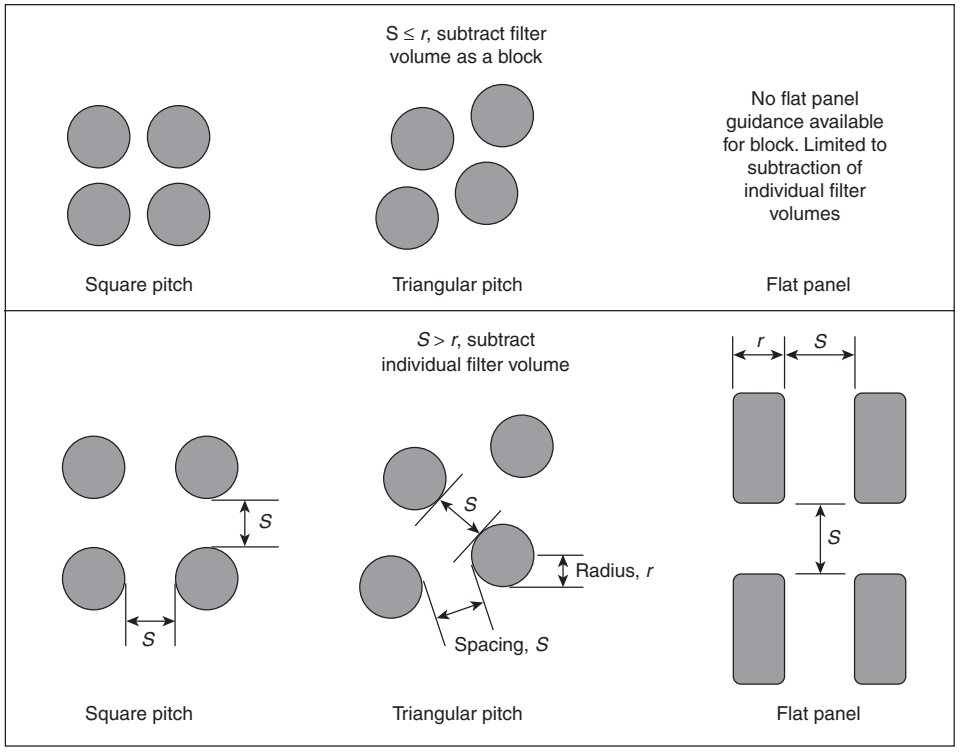

FIGURE 8.7.2 Filter Element Spacing Criteria.

Table 8.8.3.3 Additional Vent Spacing

Bucket Elevator Classification	K_{St} (bar-m/s)	Spacing (m) P_{red} ≤ 0.2 bar	Spacing (m) P_{red} ≤ 0.5 bar	Spacing (m) P_{red} ≤ 1.0 bar
Double-casing (twin leg)	<100	6	None required	None required
	100–150	3	10	19
	151–175	N/A	4	8
	176–200	N/A	3	4
	>200	N/A	N/A	3
Single-casing (single leg)	<100	N/A*	None required	None required
	100–150	N/A	7	14
	151–175	N/A	4	5
	176–200	N/A	3	4
	>200	N/A	N/A	3

N/A: Not allowed.
*For $P_{red} \leq 0.3$ bar, vent spacing of 6 m is appropriate.

8.8.3.5 For K_{St} values less than 100 bar-m/s where a P_{red} of 0.2 bar is selected, vents shall be placed at an interval not exceeding 6 m on the leg(s).

8.8.4* Vent closures shall have P_{stat} less than or equal to 0.1 bar.

8.9* Fireball Dimensions. Measures shall be taken to reduce the risk to personnel and equipment from the effects of fireball temperature and pressure.

8.9.1 A documented risk assessment shall be permitted to be used to reduce the hazard distances calculated in 8.9.2 and 8.9.3.

8.9.2* In the case of dust deflagration venting, the distance, D, shall be expressed by Equation 8.9.2:

$$D = K \cdot \left(\frac{V}{n}\right)^{1/3} \quad \textbf{(8.9.2)}$$

where:
D = axial distance (front) from the vent (m)
K = flame length factor: 10 for metal dusts, 8 for chemical and agricultural dusts
V = volume of vented enclosure (m^3)
n = number of evenly distributed vents

Copyright 2014 National Fire Protection Association (NFPA). Licensed, by agreement, for individual use and download on October 4, 2014 to LEADER and READER for designated user PATTARAPORN SRITRAKOOL. No other reproduction or transmission in any form permitted without written permission of NFPA. For inquires or to report unauthorized use, contact licensing@nfpa.org.

8.9.2.1 Axial distance, calculated by Equation 8.9.2, shall be limited to 60 m [104].

8.9.2.2 The maximum width and height of the projected flame shall be taken as D and shall be assumed to be equally distributed around the centerline of the vent discharge *(see Figure 8.9.2.2)*.

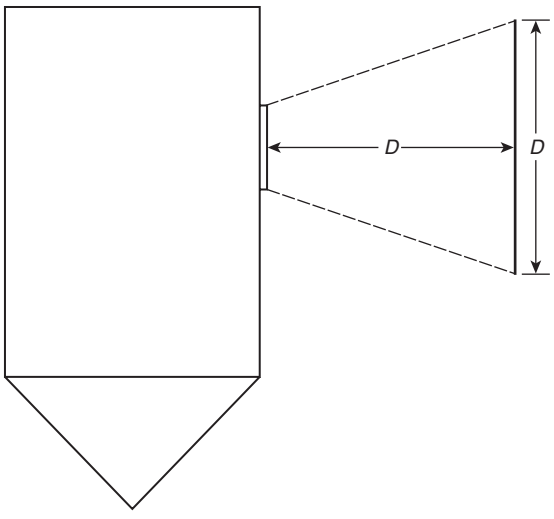

FIGURE 8.9.2.2 Fireball Dimensions.

8.9.3* Where venting is from a cubic vessel, the $P_{max,a}$ value shall be indicated approximately by Equation 8.9.3 [108]:

$$P_{max,a} = 0.2 \cdot P_{red} \cdot A_v^{0.1} \cdot V^{0.18} \quad \textbf{(8.9.3)}$$

where:
$P_{max,a}$ = external pressure (bar)
P_{red} = reduced pressure (bar)
A_v = vent area (m^2)
V = enclosure volume (m^3)

8.9.4 For distances longer than $\alpha \times D$, the maximum external pressure, $P_{max,r}$, shall be indicated approximately by Equation 8.9.4:

$$P_{max,r} = P_{max,a}(\alpha \cdot D / r) \quad \textbf{(8.9.4)}$$

where:
$P_{max,r}$ = maximum external pressure
$P_{max,a}$ = external pressure (bar)
α = 0.20 for horizontal vents and 0.25 for vertical (upward directed) vents
D = maximum length of fireball (m)
r = distance from vent (m)

8.9.5 Equation 8.9.2, Equation 8.9.3, and Equation 8.9.4 shall be valid for the following conditions:

(1) Enclosure volume: 0.3 $m^3 \le V \le$ 10,000 m^3
(2) Reduced pressure: $P_{red} \le 1$ bar
(3) Static activation pressure: $P_{stat} \le 0.1$ bar
(4) Deflagration index: $K_{St} \le 200$ bar-m/s
(5) $P_{max} \le 9$ bar

8.10* Venting Internal to a Building with Flame-Arresting and Particulate Retention Device.

8.10.1 Expected overpressure shall be compared to the building design, and building venting shall be considered to limit overpressures.

8.10.1.1 The resulting pressure increase in an unvented building shall be permitted to be estimated from the following:

(1) $\Delta P = 1.74\ P_0\ (V_1/V_0)$
(2) V_0 = free volume of building
(3) V_1 = volume of protected equipment
(4) P_0 = ambient pressure [14.7 psia (1.013 bar-abs)]
(5) ΔP = pressure rise in the building (in same units as P_0)

8.10.1.2 It shall be permitted to use a lower value of the coefficient than that shown in 8.10.1.1(1) where experimental data are available to substantiate the lower value.

8.10.2 The deflagration venting area provided for the protected enclosure shall be adjusted to compensate for the venting efficiency as determined by test for the device.

8.11* Venting Silos or Other Storage Vessel Provided with Integral Bin Vents.

8.11.1 Where bin vents (air material separators) are installed in common with a silo or any other storage vessel, they shall be protected as follows:

(1) The protected volume shall be calculated as the sum of the volume of the silo and the volume of the collector in accordance with Section 8.7.
(2) The L/D of the combination shall be calculated based on the dimensions of the silo alone in accordance with Section 6.4.
(3) Vent panels shall be located on the silo top surface or on the side walls above the maximum level of the contents of the silo.
(4) It shall be permitted to locate a portion of the venting on the bin vent surface in accordance with the following proportions:

$$A_{v,bin\ vent} = A_{v,\ total} - A_{v,silo\ min}$$

$$A_{v,silo\ min} = \left(\frac{V_{silo}}{V_{total}}\right)^{2/3} A_{v,\ total}$$

where:
$A_{v,bin\ vent}$ = vent area of the bin vent/collector
$A_{v,total}$ = total vent area calculated for the bin vent–silo combination
$A_{v,silo,min}$ = minimum explosion venting area required to be on the silo
$A_{v,silo}$ = actual explosion venting area installed on the silo

8.11.2 Where the open area of the connection between the bin vent and the silo is greater than or equal to the vent area required for the combined volume, it shall be permitted to locate all or any portion of the venting on the bin vent surface.

8.11.2.1 When 8.11.2 is applied, the clear path requirements of Section 8.7 shall apply.

8.12* Deflagration Venting of Enclosures Interconnected with Pipelines.

Copyright 2014 National Fire Protection Association (NFPA). Licensed, by agreement, for individual use and download on October 4, 2014 to LEADER and READER for designated user PATTARAPORN SRITRAKOOL. No other reproduction or transmission in any form permitted without written permission of NFPA. For inquires or to report unauthorized use, contact licensing@nfpa.org.

8.12.1* For interconnecting pipelines with inside diameters no greater than 0.3 m (1 ft) and lengths no greater than 6 m (20 ft), the following requirements shall apply [104]:

(1) The venting device for the enclosure shall be designed for $P_{stat} < 0.2$ bar.
(2) Enclosures of volumes within 10 percent of each other shall be vented as determined by Equation 8.2.2 and Equation 8.2.3.
(3) If enclosures have volumes that differ by more than 10 percent, the vents for both enclosures shall be designed as if P_{red} were equal to 1 bar or less. The enclosure shall be designed with P_{es} equal to a minimum of 2 bar.
(4) If it is not possible to vent the enclosure with the smaller volume in accordance with this standard, the smaller enclosure shall be designed for the maximum deflagration pressure, P_{max}, and the vent area of the larger enclosure with the larger volume shall be doubled.
(5) The larger enclosure shall be vented or otherwise protected as described in NFPA 69, *Standard on Explosion Prevention Systems*, in order for the deflagration venting of smaller enclosures to be effective.

8.12.2* For enclosures outside the scope of 8.12.1, explosion isolation or suppression shall be provided in accordance with NFPA 69, *Standard on Explosion Prevention Systems*, unless a documented risk assessment acceptable to the authority having jurisdiction demonstrates that increased vent area prevents enclosure failure.

Chapter 9 Venting of Deflagrations of Gases and Dusts in Pipes and Ducts Operating at or Near Atmospheric Pressure

9.1* Introduction.

9.1.1 This chapter applies to systems handling gases or dusts operating at pressures up to 0.2 bar (3 psi).

9.1.2 This chapter shall apply to pipes, ducts, and elongated vessels with length-to-diameter ratios of 5 or greater for gases and 6 or greater for dusts.

9.1.3 This chapter shall not apply to vent discharge ducts.

9.1.4 This chapter shall not apply to oxidants other than air or to mixtures at elevated initial temperatures that are greater than 57°C (134°F).

9.2* Design.

9.2.1 Each vent location along a pipe, duct, or elongated vessel shall have a vent area equal to the total cross-sectional area at each vent location.

9.2.2 The vent area needed at a vent location shall be permitted to be accomplished by using one, or more than one, vent at each location.

9.2.3 For noncircular cross sections, the diameter shall be the hydraulic diameter that is equal to $4(A/p)$, where A is the cross-sectional area and p is the perimeter of the cross section.

9.2.4* Pipes or ducts connected to a vessel in which a deflagration can occur shall have a vent located on the pipe or duct at a location no more than two pipe or duct diameters from the point of connection to the vessel.

9.2.5 For systems that handle gases, vents shall be provided on each side of turbulence-producing devices at a distance of no more than three diameters of the pipe or duct.

9.2.6 The weight of deflagration vent closures shall not exceed 12.2 kg/m^2 (2.5 lb/ft^2) of free vent area.

9.2.7 Deflagration vents shall discharge to a location that cannot endanger personnel.

9.2.8 The static burst pressure of the vent closures shall be less than 0.3 bar (2 psi).

9.2.9 Transition to Detonation.

9.2.9.1 Vents shall be placed on pipes and ducts to prevent a deflagration from transitioning into a detonation.

9.2.9.2* If L/D ratios are greater than those shown in Figure 9.2.10.1, multiple vents shall be installed in accordance with Section 9.3.

9.2.10 Use of a Single Deflagration Vent on a Pipe or Duct.

9.2.10.1* Figure 9.2.10.1 shall be used to determine the maximum allowable length of a smooth, straight pipe, duct, or vessel that is closed on one end and vented on the other where no additional deflagration vents are required.

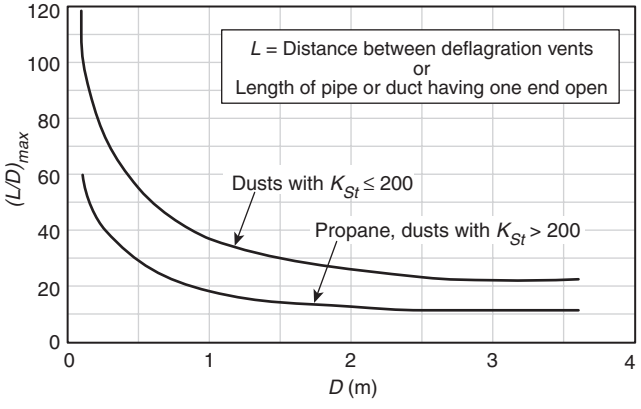

FIGURE 9.2.10.1 Maximum Allowable Distance, Expressed as Length-to-Diameter Ratio, for a Smooth, Straight Pipe or Duct.

9.2.10.2 The maximum pressure during deflagration venting, P_{red}, in a pipe or duct shall be no greater than 50 percent of the yield strength of the pipe or duct.

9.2.10.2.1 Flammable Gas Systems with a Flow Velocity of 2 m/s or Less.

9.2.10.2.1.1 The maximum pressure during deflagration venting, P_{red}, in a pipe or duct that conveys propane or gases that have a fundamental burning velocity of less than 60 cm/s shall be determined from Figure 9.2.10.2.1.1.

9.2.10.2.1.2 For other pipe diameters, P_{red} shall be determined by interpolation using Figure 9.2.10.2.1.1.

Copyright 2014 National Fire Protection Association (NFPA). Licensed, by agreement, for individual use and download on October 4, 2014 to LEADER and READER for designated user PATTARAPORN SRITRAKOOL. No other reproduction or transmission in any form permitted without written permission of NFPA. For inquires or to report unauthorized use, contact licensing@nfpa.org.

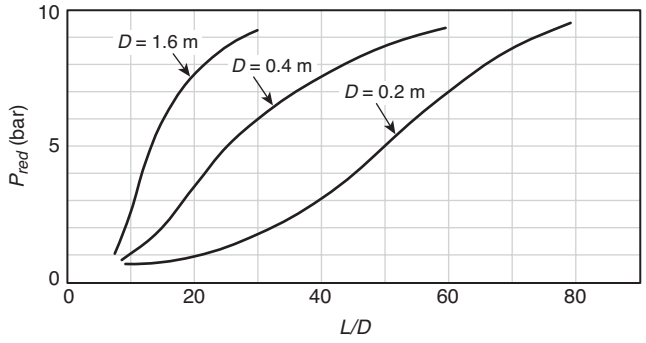

FIGURE 9.2.10.2.1.1 Maximum Pressure Developed During Deflagration of Propane/Air Mixtures Flowing at 2 m/s or Less in a Smooth, Straight Pipe Closed at One End.

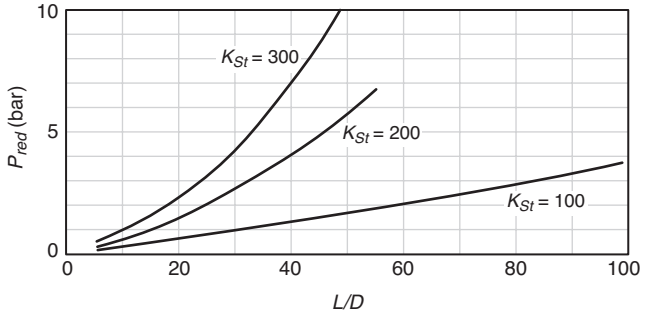

FIGURE 9.2.10.2.2.1 Maximum Pressure Developed During Deflagration of Dust/Air Mixtures Flowing at 2 m/s or Less in a Smooth, Straight Pipe Closed at One End.

9.2.10.2.2 Dust Systems with a Flow Velocity of 2 m/s or Less.

9.2.10.2.2.1* The maximum pressure during deflagration venting, P_{red}, in a pipe or duct that conveys dusts shall be estimated from Figure 9.2.10.2.2.1.

9.2.10.2.2.2 For dusts having other values of K_{St}, P_{red} shall be determined by interpolation.

9.2.11 For system flow velocities greater than 2 m/s and for gases with fundamental burning velocities greater than 60 cm/s (2 ft/s), additional vent area shall be provided in accordance with Section 9.3.

9.2.12 For systems having an initial flow velocity greater than 20 m/s, for gases having a burning velocity more than 1.3 times that of propane, or for dusts with $K_{St} > 300$, vent placement shall be determined by tests.

9.3 Multiple Deflagration Vents on a Pipe or Duct.

9.3.1* Figure 9.3.1 shall be used to determine the maximum distance between each vent for a maximum pressure during deflagration venting of 0.17 bar (2.5 psi).

9.3.1.1 Figure 9.3.1 shall apply to system flow velocities up to 20 m/s (66 ft/s).

9.3.1.2 Figure 9.3.1 shall also apply to dusts with a K_{St} less than or equal to 300 bar-m/s and to propane.

9.3.2 For gases other than propane, the maximum pressure during deflagration and the distances between vents shall be

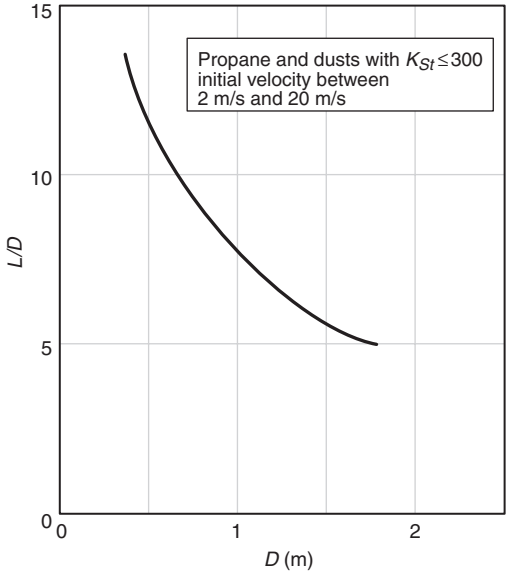

FIGURE 9.3.1 Vent Spacing Needed to Keep P_{red} from Exceeding 0.17 bar for Propane and Dusts with a K_{St} Less Than 300 bar-m/s.

calculated using Equations 9.3.2(a) and Equation 9.3.2(b), which are limited to fundamental burning velocities below 60 cm/s (2 ft/s):

$$P_{red,x} = P_{red,p} \cdot \left(\frac{S_{u,x}}{S_{u,p}} \right)^2 \quad \textbf{(9.3.2a)}$$

$$L_x = L_p \cdot \left(\frac{S_{u,p}}{S_{u,x}} \right)^2 \quad \textbf{(9.3.2b)}$$

where:

$P_{red,x}$ = maximum pressure predicted for gas [bar (psi)]
$P_{red,p}$ = 0.17 bar (2.5 psi)— maximum pressure for propane
$S_{u,x}$ = fundamental burning velocity of gas
$S_{u,p}$ = fundamental burning velocity of propane
L_x = distance between vents for gas [m (ft)]
L_p = distance between vents for propane [m (ft)]

Chapter 10 Details of Deflagration Vents and Vent Closures

10.1* Normally Open Vents.

10.1.1 Louvered Openings.

10.1.1.1 Increases in P_{red} due to louvered openings shall be accounted for in a documented system design.

10.1.1.2 The pressure drop through the louvered vent shall be determined by gas flow calculations, and P_{red} shall be adjusted.

10.1.2 Hangar-Type Doors. Large hangar-type or overhead doors shall be permitted to be installed in the walls of rooms or buildings that contain a deflagration hazard.

Copyright 2014 National Fire Protection Association (NFPA). Licensed, by agreement, for individual use and download on October 4, 2014 to LEADER and READER for designated user PATTARAPORN SRITRAKOOL. No other reproduction or transmission in any form permitted without written permission of NFPA. For inquires or to report unauthorized use, contact licensing@nfpa.org.

10.1.2.1 The doors shall be permitted to be opened to provide sizable unobstructed vents during the operation of a process or of equipment in which there is an inherent deflagration hazard.

10.1.2.2 The opening shall be considered to be a vent only when the door is not in place.

10.1.2.3 Interlocks with process systems that create a deflagration hazard shall be provided to ensure that the doors are open when the process is in operation.

10.2 Normally Closed Vents.

10.2.1 The vent closure manufacturer or designer shall be responsible for documenting the value and tolerance of the P_{stat} of a vent closure where installed according to the manufacturer's recommendation in the intended application.

10.2.2 Testing shall be carried out to establish the P_{stat} for any closure release mechanism, with the mechanism installed on the vent closure and tested as a complete assembly.

10.2.2.1 The requirement in 10.2.2 shall apply to all types of closure mechanisms, including pull-through fasteners; shear bolts; spring-loaded, magnetic, and friction latches; and rupture diaphragms.

10.2.2.2 For field-fabricated vent closures, the designer shall document that the entire assembly releases at the P_{stat} specified.

10.2.2.2.1 The documentation shall include the design P_{red}, P_{stat}, enclosure surface area, closure area, panel mass per unit area, types of fasteners, spacing, and quantity.

10.2.2.2.2 The design records and installation drawings shall be maintained by the building owner and operator.

10.2.2.3 Where vent closure mechanisms or fasteners are used, they shall be listed for the application.

10.2.3 The vent closure shall be designed to release at the calculated pressure and shall be compatible with the service conditions to which it is to be exposed.

10.2.3.1 Vent closures shall be designed for their expected temperature range.

10.2.4 The closure shall be designed to withstand natural forces such as wind or snow loads, operating conditions such as internal pressure fluctuations and internal temperature, and the effects of corrosion.

10.3 Types of Building or Room Vent Closures. The following types of vent closures shall be permitted to be used with low-strength enclosures such as those covered by Chapter 7.

10.3.1 Hinged Doors, Windows, and Panel Closures. Hinged doors, windows, and panel closures shall be designed to swing outward and have latches or similar hardware that automatically release under the calculated release pressure.

10.3.1.1 Friction, spring-loaded, or magnetic latches of the type used for doors on industrial ovens shall be permitted to be used.

10.3.1.2 For personnel safety, the door or panel shall be designed to remain intact and to stay attached.

10.3.1.3 Materials that tend to fragment and act as shrapnel shall not be used.

10.3.2* Shear and Pull-Through Fasteners. Listed shear and pull-through fasteners shall be permitted to be used where the vent design calls for large vent areas, such as the entire wall of a room.

10.3.2.1 At locations where personnel or equipment can be struck by flying vent closures, tethering of the vent closure or other safety measures shall be required.

10.3.2.2* Where restraint is required, any vent restraint design shall be documented by the designer.

10.3.2.3 No restraint for any vent closure shall result in restricting the required vent area or slowing the response time of the closure.

10.3.2.4 Any hardware added to a vent closure shall be included when determining the total mass of the closure, subject to Section 6.7.

10.4* Restraints for Large Panels. Any vent restraint design shall be documented by the designer.

10.4.1 No restraint for any vent closure shall result in restricting the vent area.

10.4.2 Any hardware added to a vent closure shall be included when determining the total mass of the closure, subject to Section 6.7.

10.5 Equipment Vent Closures.

10.5.1* Hinged Devices. Hinged doors or covers shall be permitted to be designed to function as vent closures.

10.5.1.1* The hinge shall be designed to ensure that the closure device remains intact during venting.

10.5.1.2* Hinged devices shall be permitted to be used on totally enclosed mixers, blenders, dryers, and similar equipment.

10.5.1.3 Charging doors or inspection ports shall be permitted to be designed to serve this purpose where their action does not endanger personnel.

10.5.1.4 Regular maintenance of hinge and spring-loaded mechanisms shall be performed to ensure proper operation.

10.5.1.5 If a hinged vent closure is followed by a vent duct, special consideration shall be given to the clearance between the front edge of the closure panel and the duct wall throughout the course of the opening arc.

10.5.1.5.1 The clearance shall not hinder flow during the venting while the vent closure is swinging open.

10.5.1.5.2 The amount of clearance needed from the front edge of the hinged closure, in the closed position, to the wall of the vent duct shall be approximately half the length of the hinged closure from the hinge to the front edge.

10.5.1.6* Vacuum breakers shall be permitted to be designed according to Figure 10.5.1.6 and installed to prevent inward deformation, provided they either are built strongly enough to withstand the P_{red} during venting or open to leave a clear path.

10.5.2* Rupture Diaphragm Devices. Only rupture diaphragms with controlled opening patterns that ensure full opening on initial rupture shall be utilized.

Chapter 11 Inspection and Maintenance

11.1 General.

11.1.1 This chapter covers the installation, inspection, and maintenance procedures necessary for the proper functioning and operation of vent closures for venting deflagrations.

Copyright 2014 National Fire Protection Association (NFPA). Licensed, by agreement, for individual use and download on October 4, 2014 to LEADER and READER for designated user PATTARAPORN SRITRAKOOL. No other reproduction or transmission in any form permitted without written permission of NFPA. For inquires or to report unauthorized use, contact licensing@nfpa.org.

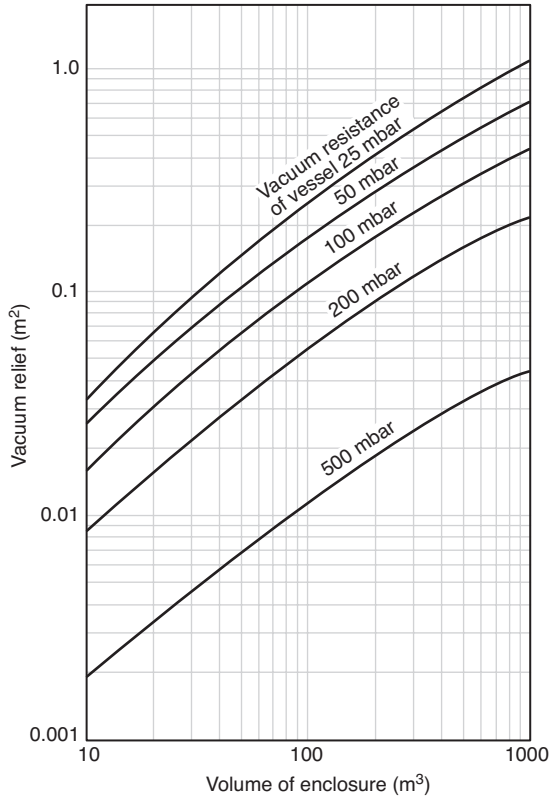

FIGURE 10.5.1.6 Graph to Determine the Vacuum Relief Area for Vacuum Vents on Enclosures [104].

11.1.2 Sections 11.4 through 11.11 shall be applied retroactively.

11.2* Design Parameters and Documentation. Data sheets, installation details, and design calculations shall be developed and maintained for each vent closure application, suitable for review by an authority having jurisdiction that verifies the vent area is sufficient to prevent deflagration pressure from exceeding the enclosure strength and identifies areas exposed to potential overpressure, event propagation, and fireball effects during venting. Documentation shall include all of the following:

(1) Manufacturer's data sheets and instruction manuals
(2) Design calculations
(3) General specifications
(4) Vent closure specifications
(5) End user inspection/maintenance forms
(6) User documentation of conformity with applicable standards
(7) Vent closure identification
(8) Combustible material properties test report
(9) Copy of vent identification label
(10) Process plan view
(11) Process elevation view
(12) Vent relief (pressure and fireball) path
(13) Proximity of personnel to vent relief path
(14) Mechanical installation details
(15) Electrical supervision (if provided) installation details
(16) Vent restraint installation and design documentation (if required)
(17) Process interlocks (if provided)
(18) Event deflagration isolation requirements (if required)
(19) Employee training requirements

11.3 Installation.

11.3.1 Mounting frames shall be fabricated and mounted so that the vent closure is not stressed in any way that will contribute to fatiguing the vent closure.

11.3.2 Vent closures shall be installed in accordance with the manufacturer's requirements.

11.3.3 The final installation shall be inspected to verify its conformance to the design.

11.3.4* Vent closures shall be clearly marked as follows:

WARNING: Explosion relief device.

11.4* Inspection.

11.4.1 Vent closures shall be inspected according to 11.4.4 at least annually.

11.4.2* The frequency of the inspection described in 11.4.4 shall be permitted to be increased or decreased based on documented operating experience.

11.4.3 The owner/operator of the facility in which the deflagration vent closures are located shall be responsible for inspecting and maintaining such devices after they are installed.

11.4.4 The inspector shall verify, as applicable, that the vent inspection determines the following:

(1) The opening is free and clear of any obstructions on both sides.
(2) The discharged material and fireball pathway does not extend into an area normally occupied by personnel or critical process equipment.
(3) The closure has been properly installed according to manufacturer's instructions.
(4) The closure is not corroded or mechanically damaged.
(5) The closure is clearly identified with manufacturer's information.
(6) The closure is clearly labeled as an explosion relief device.
(7) The closure has no damage and is protected from the accumulation of water, snow, ice, or debris after any act of nature.
(8) The closure has not been painted or coated other than by manufacturer.
(9) The closure has no buildup of deposits on the inside surfaces or between layers of the vent.
(10) The closure has not been tampered with.
(11) The closure shows no fatigue and has not released.
(12) The closure hinges (if provided) are lubricated and operate freely.
(13) The closure restraints (if provided) are in place and operational.
(14) The closure seals, tamper indicators, or vent rupture indicators (e.g., breakwire switches), if provided, are in place.
(15) The flame-arresting and particulate-retention device is being maintained, is clean, and is unobstructed in accordance with the manufacturer's listing.
(16) The closure has no conditions that would hinder its operation.

11.4.5 The owner/operator shall verify by signature on the inspection form that the production process material has not changed since the last inspection.

11.5 Procedures Following Vent Closure Actuation.

11.5.1 In the event of vent closure actuation, inspection and maintenance as specified in Sections 11.4 and 11.10, respectively, shall be performed before the system is placed back into service.

Copyright 2014 National Fire Protection Association (NFPA). Licensed, by agreement, for individual use and download on October 4, 2014 to LEADER and READER for designated user PATTARAPORN SRITRAKOOL. No other reproduction or transmission in any form permitted without written permission of NFPA. For inquires or to report unauthorized use, contact licensing@nfpa.org.

11.5.2 An investigation and a review of the cause of the actuation shall be made.

11.6* Vent Closure Design Parameters. The vent closure design parameters shall be maintained and made available for management of change review, employee training information, inspection, and reordering purposes.

11.7 Inspection Reports. Deficiencies found during inspections shall be reported to the owner/operator.

11.8 Recordkeeping.

11.8.1 A record shall be maintained that indicates the date and the results of each inspection and the date and description of each maintenance activity.

11.8.2 The records of inspections shall be retained for a minimum of 3 years.

11.9 Management of Change. Management shall implement and maintain written procedures to evaluate proposed changes to facility and processes, both physical and human, for the impact on safety, loss prevention, and control.

11.9.1 Management of change procedures shall be followed for any change to process, materials, technology, equipment, process flow, exposure, or procedures affecting equipment protected by requirements in this document.

11.9.2* Management of change documentation shall be available for review by the relevant authority having jurisdiction.

11.9.3 The management of change procedures shall ensure that the following issues are addressed prior to any change:

(1) The technical basis for the proposed change
(2) Safety and health implications
(3) Review of fire and explosion prevention systems
(4) Whether the change is permanent or temporary
(5) Personnel exposure changes
(6) Modifications to operating maintenance procedures
(7) Employee training requirements
(8) Authorization requirements for the proposed change

11.9.4 Implementation of the management of change procedures shall not be required for replacements-in-kind.

11.9.5 Design documentation as required by Section 11.2 shall be updated to incorporate the change.

11.10 Maintenance.

11.10.1 Vent closure maintenance shall be performed after every act of nature or process upset condition to ensure that the closure has not been physically damaged and there are no obstructions, including but not limited to snow, ice, water, mud, or process material, that could lessen or impair the efficiency of the vent closure.

11.10.2 An inspection shall be performed in accordance with 11.4.4 after every process maintenance turnaround.

11.10.3 If process material has a tendency to adhere to the vent closure, the vent closure shall be cleaned periodically to maintain vent efficiency.

11.10.4 Process interlocks, if provided, shall be verified.

11.10.5 Known potential ignition sources shall be inspected and maintained.

11.10.6 Records shall be kept of any maintenance and repairs performed.

11.11 Employee Training.

11.11.1 Initial and refresher training shall be provided and training records maintained for employees who are involved in operating, maintaining, and supervising facilities that utilize devices for venting of deflagrations.

11.11.2 Initial and refresher training shall ensure that all employees are knowledgeable about the following:

(1) Hazards of their workplace
(2) General orientation, including plant safety rules
(3) Process description
(4) Equipment operation, safe startup and shutdown, and response to upset conditions
(5) The necessity for proper functioning of related fire and explosion protection systems
(6) Deflagration vent(s) location, vent relief path, and maintenance requirements and practices
(7) Housekeeping requirements
(8) Emergency response and egress plans

Annex A Explanatory Material

Annex A is not a part of the requirements of this NFPA document but is included for informational purposes only. This annex contains explanatory material, numbered to correspond with the applicable text paragraphs.

A.1.1 A deflagration can result from the ignition of a flammable gas, mist, or combustible dust. This standard is a companion document to NFPA 69, *Standard on Explosion Prevention Systems*, which covers explosion prevention measures and can be used in place of, or in conjunction with, NFPA 68. The choice of the most effective and reliable means for explosion control should be based on an evaluation that includes the specific conditions of the hazard and the objectives of protection. Venting of deflagrations only minimizes the damage that results from combustion.

A.1.2 It is important to note that venting does not prevent a deflagration; venting can, however, minimize the destructive effects of a deflagration.

A.1.3 Vents act as a system in conjunction with the strength of the protected enclosure. However, some lightweight structures, such as damage-limiting buildings, can be considered to be totally self-relieving and require no specific vents.

The following documents specify under which conditions deflagration venting (explosion protection measures) is required:

(1) NFPA 30, *Flammable and Combustible Liquids Code*
(2) NFPA 30B, *Code for the Manufacture and Storage of Aerosol Products*
(3) NFPA 33, *Standard for Spray Application Using Flammable or Combustible Materials*
(4) NFPA 35, *Standard for the Manufacture of Organic Coatings*
(5) NFPA 52, *Vehicular Gaseous Fuel Systems Code*
(6) NFPA 61, *Standard for the Prevention of Fires and Dust Explosions in Agricultural and Food Processing Facilities*
(7) NFPA 69, *Standard on Explosion Prevention Systems*
(8) NFPA 400, *Hazardous Materials Code*
(9) NFPA 484, *Standard for Combustible Metals*
(10) NFPA 654, *Standard for the Prevention of Fire and Dust Explosions from the Manufacturing, Processing, and Handling of Combustible Particulate Solids*

A.1.3.2 For further information, see NFPA 30, *Flammable and Combustible Liquids Code*.

A.3.2.1 Approved. The National Fire Protection Association does not approve, inspect, or certify any installations, procedures, equipment, or materials; nor does it approve or evaluate testing laboratories. In determining the acceptability of

Copyright 2014 National Fire Protection Association (NFPA). Licensed, by agreement, for individual use and download on October 4, 2014 to LEADER and READER for designated user PATTARAPORN SRITRAKOOL. No other reproduction or transmission in any form permitted without written permission of NFPA. For inquires or to report unauthorized use, contact licensing@nfpa.org.

installations, procedures, equipment, or materials, the authority having jurisdiction may base acceptance on compliance with NFPA or other appropriate standards. In the absence of such standards, said authority may require evidence of proper installation, procedure, or use. The authority having jurisdiction may also refer to the listings or labeling practices of an organization that is concerned with product evaluations and is thus in a position to determine compliance with appropriate standards for the current production of listed items.

A.3.2.2 Authority Having Jurisdiction (AHJ). The phrase "authority having jurisdiction," or its acronym AHJ, is used in NFPA documents in a broad manner, since jurisdictions and approval agencies vary, as do their responsibilities. Where public safety is primary, the authority having jurisdiction may be a federal, state, local, or other regional department or individual such as a fire chief; fire marshal; chief of a fire prevention bureau, labor department, or health department; building official; electrical inspector; or others having statutory authority. For insurance purposes, an insurance inspection department, rating bureau, or other insurance company representative may be the authority having jurisdiction. In many circumstances, the property owner or his or her designated agent assumes the role of the authority having jurisdiction; at government installations, the commanding officer or departmental official may be the authority having jurisdiction.

A.3.2.4 Listed. The means for identifying listed equipment may vary for each organization concerned with product evaluation; some organizations do not recognize equipment as listed unless it is also labeled. The authority having jurisdiction should utilize the system employed by the listing organization to identify a listed product.

A.3.3.7 Enclosure. Examples of enclosures include a room, building, vessel, silo, bin, pipe, or duct.

A.3.3.11 Flame Speed. Flame speed is dependent on turbulence, the equipment geometry, and the fundamental burning velocity.

A.3.3.12.1 Lower Flammable Limit (LFL). LFL is also known as minimum explosible concentration (MEC). See ASTM E 681, *Standard Test Method for Concentration Limits of Flammability of Chemicals (Vapors and Gases).*

A.3.3.14 Flash Point. See ASTM E 502, *Standard Test Method for Selection and Use of ASTM Standards for the Determination of Flash Point of Chemicals by Closed Cup Methods,* to determine the appropriate test method to use.

A.3.3.15 Friction Factor, f_D. The D'Arcy friction factor, relating pressure drop in a straight duct to velocity and wetted surface area, is dimensionless:

$$f_D = \frac{2D_h \cdot \Delta P}{\rho \cdot U^2 \cdot L}$$

where:
D_h = hydraulic diameter
ΔP = pressure loss across the duct
ρ = fluid density
U = fluid velocity (shown here as U to avoid confusion with volume)
L = duct length

At least two friction factors are in common usage: the D'Arcy friction factor, as used in this document, and the Fanning friction factor (f_F). The two forms differ by a factor of 4, as seen here:

$$f_F = \frac{D_h \cdot \Delta P}{2\rho \cdot U^2 \cdot L}, \text{ the Fanning friction factor} \quad \textbf{(A.3.3.15a)}$$

$$f_D = \frac{2 \cdot D_h \cdot \Delta P}{\rho \cdot U^2 \cdot L}, \text{ the D'Arcy friction factor} \quad \textbf{(A.3.3.15b)}$$

$$f_D = 4 f_F \quad \textbf{(A.3.3.15c)}$$

The equivalent velocity head loss for straight duct is expressed as follows:

$$K = \frac{4 \cdot f_F \cdot L}{D_h} \text{ when using the Fanning friction factor} \quad \textbf{(A.3.3.15d)}$$

$$K = \frac{f_D \cdot L}{D_h} \text{ when using the D'Arcy friction factor} \quad \textbf{(A.3.3.15e)}$$

D'Arcy friction factors are presented in Moody diagrams and can be calculated from equations that represent the diagrams. See NFPA 750, *Standard on Water Mist Fire Protection Systems,* for a Moody diagram. Similar diagrams are also available to provide Fanning friction factors. To be sure that the appropriate diagram is being used, the user should examine the laminar region. In the laminar region — that is, a low Reynolds number — the D'Arcy friction factor equals 64/Re. The Fanning friction factor in the laminar region equals 16/Re.

Colebrook equations model the friction factor using implicit equations, which must be solved iteratively. The factor of 4 difference can be seen in the following similar equations:

For the Fanning friction factor:

$$\frac{1}{\sqrt{f_F}} = -4\log_{10}\left[\frac{\varepsilon}{3.7 \cdot D_h} + \frac{1.255}{\mathrm{Re}\sqrt{f_F}}\right] \quad \textbf{(A.3.3.15f)}$$

For the D'Arcy friction factor:

$$\frac{1}{\sqrt{f_D}} = -2\log_{10}\left(\frac{\varepsilon}{3.7 \cdot D_h} + \frac{2.51}{\mathrm{Re}\sqrt{f_D}}\right) \quad \textbf{(A.3.3.15g)}$$

where:
ε = the absolute roughness
Re = the dimensionless Reynolds number

Note that ε/D is the dimensionless relative roughness.

When applied to venting, the friction factor is evaluated at fully turbulent conditions, meaning a very large Reynolds number. For these conditions, the D'Arcy form of the Colebrook equation is rearranged and simplified as follows to allow a direct solution:

$$\frac{1}{\sqrt{f_D}} = -2\log_{10}\left[\frac{\varepsilon}{3.7 \cdot D_h} + (\approx 0)\right]$$

$$\frac{1}{\sqrt{f_D}} = 1.14 - 2\log_{10}\left(\frac{\varepsilon}{D_h}\right)$$

$$f_D = \left\{\frac{1}{\left[1.14 - 2\log_{10} \cdot \left(\frac{\varepsilon}{D_h}\right)\right]}\right\}^2 \quad \textbf{(A.3.3.15h)}$$

Copyright 2014 National Fire Protection Association (NFPA). Licensed, by agreement, for individual use and download on October 4, 2014 to LEADER and READER for designated user PATTARAPORN SRITRAKOOL. No other reproduction or transmission in any form permitted without written permission of NFPA. For inquires or to report unauthorized use, contact licensing@nfpa.org.

A.3.3.18 Hydraulic Diameter. Hydraulic diameters for circles, squares, and rectangular, triangular, and elliptical shapes are given in Darby, Table 7-1.

For circular cross sections, the effective diameter is the standard diameter. For cross sections other than those that are circular, the effective diameter is the hydraulic diameter determined by Equation A.3.3.18a, where A is the cross-sectional area normal to the longitudinal axis of the space and p is the perimeter of the cross section.

$$D_h = 4 \cdot \left(\frac{A}{p} \right) \qquad \textbf{(A.3.3.18a)}$$

The term *equivalent diameter*, D_E, appears in earlier editions of NFPA 68, but based upon the Committee's review of the data, which is based on circular ducts, the use of hydraulic diameter was determined to be more appropriate and has been introduced into this edition of the standard. The definition of equivalent diameter is shown by the following equation:

$$D_E = 2\sqrt{\frac{A}{\pi}} \qquad \textbf{(A.3.3.18b)}$$

Equivalent diameters are not the same as hydraulic diameters.

A.3.3.19 K_G. See B.1.2.3.

A.3.3.20 K_{St}. See B.1.2.3.

A.3.3.23 Minimum Ignition Energy (MIE). The lowest value of the minimum ignition energy is found at a certain optimum mixture. The lowest value, at the optimum mixture, is usually quoted as the minimum ignition energy.

A.3.3.25.1 Hybrid Mixture. In certain processes, flammable gases can desorb from solid materials. If the solid is combustible and is dispersed in the gas-oxidant mixture, as can be the case in a fluidized bed dryer, a hybrid mixture can also result. *(See 6.2.3.)*

A.3.3.25.2 Optimum Mixture. The optimum mixture is not always the same for each combustion property that is measured.

A.3.3.26 Oxidant. Oxygen in air is the most common oxidant.

A.3.3.28.1 Maximum Rate of Pressure Rise *[(dP/dt)$_{max}$]*. See Annex B.

A.3.3.34.1 Hinge Vent. This type of vent closure includes hinged doors, as well as rupture panels that petal upon actuation. During vent actuation, the vent petal(s) are retained by the hinge(s).

A.3.3.34.2 Translating Vent. A translating vent closure that fragments into multiple pieces during vent actuation is sometimes termed a *fragmentation vent.*

A.4.2.1.1 The nature of a deflagration event is such that personnel in an enclosure where a deflagration occurs do not have time to exit to a place of safety. Personnel in the space will be subject to flame and pressure effects. General safety guidelines of other standards should be consulted for advice on how to prevent hazardous atmospheres or restrict access.

A.4.2.1.4 Combustible dust is not completely oxidized during a vented deflagration. Vented material comprises unburned dust, oxidized combustion products, plus partially burned "decomposition" products. Vent relief devices open at a small fraction of the 6–10 atmosphere overpressures produced by typical confined dust deflagrations, and the maximum amount of unburned material is released when the ignition source is farthest from the vent. Unburned dust is always released during venting, and a cloud of dust and various other products can travel large distances from the vented enclosure. Even with a flame-arresting and particulate retention device installed on the vent closure, some dust will escape into the surrounding area. Alternative methods of explosion prevention or protection should be applied for highly toxic combustible dusts, taking into consideration the potential for personnel exposure to released material during or after the event. Consideration of the most appropriate means of explosion protection should include environmental impact even if a toxic dust does not meet the criteria of "highly toxic" in this standard.

A.4.2.2.2 Treatment of interconnected enclosures needs to be considered and explained.

A.5.1.1 The person(s) or organization performing these assessments should have experience in the technologies presented in this document, knowledge of explosion dynamics, the effects of explosions on structures, and alternative protection measures.

A.5.2.3.2 For example, information on blast loads or buildings can be found in API 752, *Management of Hazards Associated with Location of Process Plant Buildings*, Table 3.

A.5.2.3.3 Deflagration vents should be located to discharge into spaces where they will not present a hazard. It is acknowledged that it might be impractical to achieve this safety objective in some cases such as existing plants. In these cases, appropriate warning signs should be posted and the risk should be minimized using an "as-low-as-reasonably-practicable" (ALARP) or other acceptable risk mitigation principle.

A.6.1 A deflagration vent is an opening in an enclosure through which material expands and flows, thus relieving pressure. If no venting is provided, the maximum pressures developed during a deflagration of an optimum fuel–air mixture are typically between 6 and 10 times the initial absolute pressure. In many cases, it is impractical and economically prohibitive to construct an enclosure that can withstand or contain such pressures.

In some cases, however, it is possible to design for the containment of a deflagration. For further information, see NFPA 69, *Standard on Explosion Prevention Systems.*

A.6.1.1 The maximum pressure generated and the maximum rate of pressure rise are key factors in the design of deflagration protection systems. The key characteristics of closed-vessel deflagrations are the maximum pressure attained, P_{max}, and the maximum rate of pressure rise, $(dP/dt)_{max}$. A rapid rate of rise means that only a short time is available for successful venting. Conversely, a slower rate of rise allows the venting to proceed more slowly while remaining effective. In terms of required vent area, the more rapid the rate of rise, the greater the area necessary for venting to be effective, with all other factors being equal.

A.6.1.2 Current vent sizing methodology is based on K_{St} as determined by ASTM E 1226, *Standard Test Method for Explosibility of Dust Clouds,* or the similar ISO 6184-1, *Explosion Protection Systems — Part 1: Determination of Explosion Indices of Combustible Dust in Air.* Determination of K_{St} values by methods other than these would be expected to yield different results. Data from the Hartmann apparatus should not be used for vent sizing. Also, the 20 L test apparatus is designed to simulate results of the 1 m^3 chamber; however, the igniter discharge makes it problematic to determine K_{St} values less than 50 bar-m/s. Where the material is expected to yield K_{St} values less than 50 bar-m/s, testing in a 1 m^3 chamber might yield lower values.

Copyright 2014 National Fire Protection Association (NFPA). Licensed, by agreement, for individual use and download on October 4, 2014 to LEADER and READER for designated user PATTARAPORN SRITRAKOOL. No other reproduction or transmission in any form permitted without written permission of NFPA. For inquires or to report unauthorized use, contact licensing@nfpa.org.

The K_{St} value needs to be verified by specific test of a dust that has been created by the process that created the dust. There are reasons why this needs to be done.

The shape and particle size distribution of the dust is affected by the mechanical abuse that the material has undergone by the process that has created the dust in the first place. An example of this is the polymeric dust created by the suspension polymerization of styrene (in water) that results in spherical particle shapes (resembling small spheres).

A polymeric dust created by sending a bulk polymerized polystyrene block through a hammermill results in a dust that has been fractured and has many sharp edges and points. Even if the sieve size distribution of the two types of particles are similar, the specific surface area of the spherical particles can be much smaller than the particles generated by hammermill. The K_{St} values for these two samples will be different. The rate of pressure rise for the spherical particles will be slower than the dust sample created by the hammermill operation. Guidance for representative particulate sampling procedures can be found in ASTM D 5680a, *Standard Practice for Sampling Unconsolidated Solids in Drums or Similar Containers,* or in the CCPS *Guidelines for Safe Handling of Powders and Bulk Solids,* Section 4.3.1.

A.6.1.2.1 An increase in the moisture content of a dust also can decrease the maximum rate of pressure rise. The quantity of moisture necessary to prevent the ignition of a dust by most common sources normally results in dust so damp that a cloud cannot readily form. Material that contains such a quantity of moisture usually causes processing difficulties. An increase in the moisture content of a dust can increase the minimum energy necessary for ignition, ignition temperature, and flammable limit. Moisture in a dust can inhibit the accumulation of electrostatic charges. Since moisture in the air (humidity) surrounding a dust particle has no significant effect on a deflagration once ignition occurs, a moisture addition process should not be used as the basis for reducing the size of deflagration vents.

A.6.1.3 The maximum rate of pressure rise can be normalized to determine the K_G value. It should be noted, however, that the K_G value is not constant and varies, depending on test conditions. In particular, increasing the volume of the test enclosure and increasing the ignition energy can result in increased K_G values. Although the K_G value provides a means of comparing the maximum rates of pressure rise of known and unknown gases, it should be used as a basis for deflagration vent sizing only if the tests for both materials are performed in enclosures of approximately the same shape and size, and if tests are performed using igniters of the same type that provide consistent ignition energy.

Some publications have proposed the calculation of vent areas for gases based on fundamental flame and gas flow properties and experimentally determined constants [26, 78, 79]. These calculation procedures have not yet been fully tested and are not recommended.

A.6.2.3 The properties of hybrid mixtures are discussed extensively in [3] and [66]. The effective K_{St} value of most combustible dusts is raised by the admixture of a combustible gas, even if the gas concentration is below the lower flammable limit. The equivalent mixture K_{St} can be determined by adapting the ASTM E 1226, *Standard Test Method for Explosibility of Dust Clouds*, method to precharge the test vessel with the combustible gas(es), then inject the dust in the normal way.

A.6.2.4 The foams of combustible liquids can burn. If the foam is produced by air that bubbles through the liquid, the bubbles contain air for burning. Combustion characteristics depend on a number of properties such as the specific liquid, the size of the bubble, and the thickness of the bubble film. A more hazardous case occurs if a combustible liquid is saturated with air under pressure; if the pressure over the liquid phase is then released, foam can form with the gas phase in the bubbles preferentially enriched in oxygen. The enrichment occurs because the solubility of oxygen in combustible liquids is higher than that of nitrogen. The increased oxygen concentration results in intensified combustion. Therefore, it is recommended that combustible foams be tested carefully relative to design for deflagration venting.

A.6.3.1.1 If the enclosure is intended to be reused following an event, the owner or operator should design the system to prevent permanent deformation of the enclosure. This is also referred to as "explosion pressure resistant design" in European documents such as VDI 3673, *Pressure Venting of Dust Explosions*, and EN 13237, "Potentially explosive atmospheres — Terms and definitions for equipment and protective systems intended for use in potentially explosive atmospheres."

A.6.3.1.2 This is also referred to as "explosion pressure shock resistant design" in European documents.

A.6.3.1.3 Figure A.6.3.1.3 shows a curve that is a general representation of a stress-strain curve for low-carbon steel.

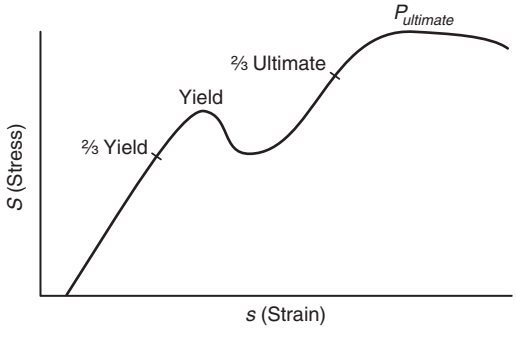

FIGURE A.6.3.1.3 Stress-Strain Curve for Low-Carbon Steel.

In the context of pressure vessels, the maximum allowable accumulation of pressure, above the maximum allowable working pressure (MAWP), during the postulated relief scenario is used to determine the minimum open area of the relieving device. Stated differently, the maximum pressure in the vessel is allowed to exceed MAWP during the release. Equations 6.3.1.3.2a and 6.3.1.3.2b similarly indicate that for ratios of ultimate stress or yield stress to allowable stress greater than 1.5, P_{red} could be chosen to exceed MAWP during the deflagration.

A.6.3.2 The maximum pressure that is reached during venting, P_{red}, exceeds the pressure at which the vent device releases, P_{stat}. The amount by which P_{red} exceeds P_{stat} is a complicated function of the rate of pressure development within the enclosure, vent size, and vent mass. Where the ratio of the deflagration vent area to the enclosure volume is large, P_{red} approaches P_{stat}. As the vent area is reduced, P_{red} increases and approaches P_{max} as the vent area goes to zero.

Copyright 2014 National Fire Protection Association (NFPA). Licensed, by agreement, for individual use and download on October 4, 2014 to LEADER and READER for designated user PATTARAPORN SRITRAKOOL. No other reproduction or transmission in any form permitted without written permission of NFPA. For inquires or to report unauthorized use, contact licensing@nfpa.org.

The dynamic load factor (*DLF*) is defined as the ratio of the maximum dynamic deflection to the deflection that would have resulted from the static application of the peak load, P_{red}, which is used in specifying the load-time variation. Thus the *DLF* is given by the following:

$$DLF = \frac{X_m}{X_s}$$

where:

X_s = static deflection or, in other words, the displacement produced in the system when the peak load is applied statically

X_m = maximum dynamic deflection

For a linear elastic system subjected to a simplified dynamic load, the maximum response is defined by the *DLF* and maximum response time, t_m. T is the duration of the load, called t_f in 6.3.5.5, and T_n is the natural period of the structure. The *DLF* and time ratio t_m/T are plotted versus the time ratio T/T_n in Figure A.6.3.2 and Figure A.6.3.5.1 for A.6.3.2(2) and A.6.3.2(1), respectively.

Two simplified loading curves with a total impulse (force × time) of 1 are discussed as follows:

(1) A triangular load with an initial amplitude of 2 force units and a duration of 1 time unit
(2) A triangular pulse load with an initial amplitude of 0 force units, rising linearly to 2 force units at time of one-half time unit, and falling linearly to 0 force units at a total duration of 1 time unit

For the situation inside a vented enclosure, the deflagration develops in an idealized triangular pulse, A.6.3.2(2). The pressure builds at least to the point the vent closure opens, P_{stat}, and continues to rise to P_{red}. After reaching P_{red}, the pressure in the enclosure falls. In this case the maximum value of *DLF* would be approximately 1.5. Therefore design for a static pressure of two-thirds of yield or burst means that the maximum deflections during the event would reach yield or burst pressure, depending on the design choice. Because deflagration testing is done on supposed worst-case mixtures, this is a reasonable design value. For a stiff enclosure with a small natural period, T_n, and a typical deflagration, $T/T_n > 1$ and *DLF* will be less than the maximum 1.5.

A.6.3.2.2 The dynamic load factor (*DLF*) value of 1.5 is approximately the maximum directly applicable to a linear elastic system with a centrally peaked blast loading. The development of *DLF* values for nonlinear plastic behavior is more complex, and the applicable *DLF* can exceed 1.5. A *DLF* value of 1.5 was adopted in 6.3.1 and 6.3.2 as a reasonable estimate intended to represent a range of conditions but is not bounding for cases where permanent deformation is allowed. If the expected explosion pressure pulse and the response of the enclosure are available, the following references provide guidance on the evaluation of dynamic load factors:

(1) Biggs, *Introduction to Structural Dynamics*
(2) UFC 3-340-02, *Structures to Resist the Effects of Accidental Explosions*
(3) ASCE, *Design of Blast-Resistant Buildings in Petrochemical Facilities*
(4) Yu and Young, "The Dynamic Load Factor of Pressure Vessels in Deflagration Events"

A.6.3.3.1 For example, floors and roofs are not usually designed to be loaded from beneath.

A.6.3.5.1 Equation 6.3.5.2 for the reaction forces in 6.3.5.1 has been established from test results [46]. For the situation outside a vented enclosure, the shape of the load curve, as applied to the supporting structure, could approach a triangular pulse as in A.6.3.2(2) or a triangular wave as in A.6.3.2(1). If P_{red} is not much larger than P_{stat}, the load curve would approach A.6.3.2(1) and the maximum *DLF* would approach 2, as shown in Figure A.6.3.5.1. On the other hand, if P_{red} is significantly greater than P_{stat} and the deflagrating material exhibits a moderate K_{St}, the load curve would approach A.6.3.2(2) with a maximum *DLF* of 1.5.

Both maximum values for the supporting structure are higher than the experimental results by Faber [46], which bound the value of *DLF* as 1.2. Because the actual shape of the load curve is intermediate between the two cases, it is recommended that the experimental limiting value be used instead of either of the theoretical limits.

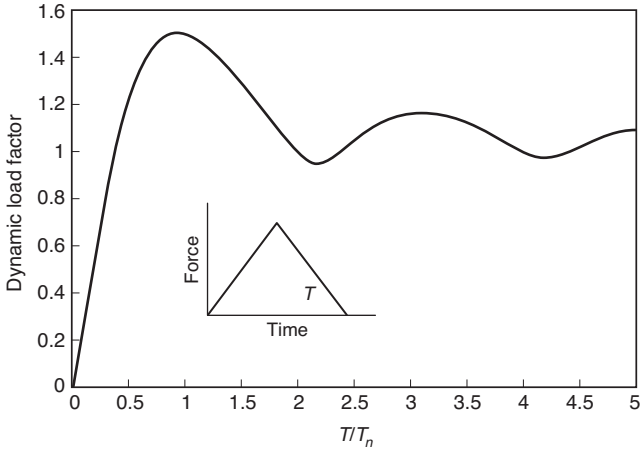

FIGURE A.6.3.2 Maximum Response of Elastic One-Degree-of-Freedom System for Triangular Pulse Load. ***(Courtesy of Department of Defense Explosives Safety Board, from TM 5-1300, Structure to Resist the Effects of Accidental Explosions, Figure 3-52)***

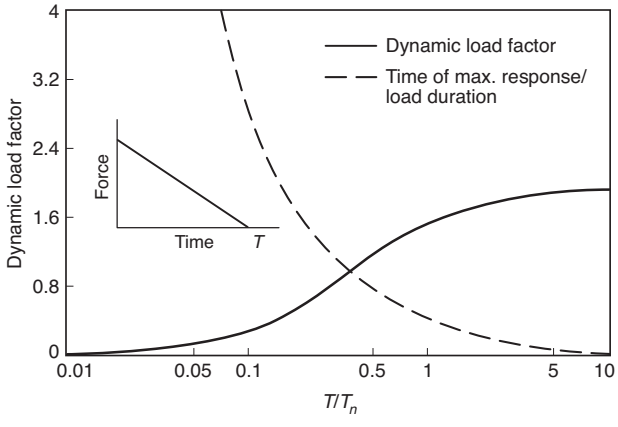

FIGURE A.6.3.5.1 Maximum Response of Elastic One-Degree-of-Freedom System for Triangular Load. ***(Courtesy of Department of Defense Explosives Safety Board, from TM 5-1300, Structure to Resist the Effects of Accidental Explosions, Figure 3-4)***

Copyright 2014 National Fire Protection Association (NFPA). Licensed, by agreement, for individual use and download on October 4, 2014 to LEADER and READER for designated user PATTARAPORN SRITRAKOOL. No other reproduction or transmission in any form permitted without written permission of NFPA. For inquires or to report unauthorized use, contact licensing@nfpa.org.

A.6.3.5.2 An example of the calculation of reaction force, F_r, during venting for a vent area of 1 m^2 and a P_{red} of 1 bar is as follows:

(1) $A_v = 1\ m^2 = 1550\ in.^2$
(2) $P_{red} = 1$ bar = 14.5 psi
(3) $F_r = (1) \cdot (1.2) \cdot (1550) \cdot (14.5) = 26{,}970$ lbf

A.6.3.5.3 In the absence of specific test information or combustion modeling results for pressure versus time, a combined collapse failure mechanism for structural supports can be evaluated against both idealized pulse and triangular wave loads and be designed based on the maximum *DLF*.

A.6.3.5.4 The installation of vents of equal area on opposite sides of an enclosure cannot be depended on to prevent thrust in one direction only. It is possible for one vent to open before another. Such imbalance should be considered when designing restraints for resisting reaction forces.

A.6.3.5.5 Knowing the duration of the reaction force can aid in the design of certain support structures for enclosures with deflagration vents. Reference [114] contains several general equations that approximate the duration of the thrust force of a dust deflagration. These equations apply only to enclosures without vent ducts. This material was contained in the NFPA 68 Impulse Task Force Report [113] to the full committee September 15, 1999.

A.6.3.5.6 The determination of total impulse uses an equivalent static force, which represents the force–time integrated area as a rectangular pulse with height equal to F_s and a width equal to t_f. The equivalent static force, F_s, to be used for calculating total impulse is based on a load factor of 0.52, as established from test results [46]:

$$F_s = 0.52 \cdot (F_r)$$

For additional information on derivation of *DLF* and for use of the total impulse values, refer to textbooks on structural dynamics, such as Biggs, *Introduction to Structural Dynamics*.

An example of the calculation of duration of reaction force, t_f, and total impulse, I, resulting from venting for the following conditions is as follows:

(1) $V = 20\ m^3$
(2) $P_{max} = 8$ bar
(3) $P_{red} = 0.4$ bar
(4) $A_v = 1.4\ m^2$
(5) $t_f = (0.0043) \cdot (8/0.4)^{0.5} \cdot (20/1.4)$
(6) $t_f = 0.27$ s
The reaction force is determined as in 6.3.5.2:
(7) $F_r = (100) \cdot (1.2) \cdot (1.4) \cdot (0.4)$
(8) $F_r = 67$ kN
(9) $I = (0.52) \cdot (67) \cdot (0.27)$
(10) $I = 9.4$ kN-s = 9400 N-s

A.6.4 The P_{red} developed in a vented enclosure decreases as the available vent area increases. If the enclosure is small and relatively symmetrical, one large vent can be as effective as several small vents of equal combined area. For large enclosures, the location of multiple vents to achieve uniform coverage of the enclosure surface to the greatest extent practicable is recommended. Rectangular vents are as effective as square or circular vents of equal area.

A.6.4.3 *Example 1.* Cylindrical enclosure with a hopper and vented in the roof:

(1) H equals the vertical height of the enclosure = 6 m.
(2) V_{eff} equals the total free volume of the enclosure.
(a) The volume of the cylindrical part = $(\pi \cdot D^2/4) \cdot h = [\pi \cdot (1.8)^2/4] \cdot 4 = 10.18\ m^3$.
(b) The volume of the hopper, with diameters D_1 and D_2 = $\pi \cdot h \cdot [(D_1)^2 + (D_1 \cdot D_2) + (D_2)^2]/12 = \pi \cdot 2 \cdot [(2)^2 + (2 \cdot 0.5) + (0.5)^2]/12 = 2.75\ m^3$.
(c) $V_{eff} = 10.18 + 2.75 = 12.93\ m^3$.
(d) V_{eff} is the shaded region in Figure A.6.4.3(a).

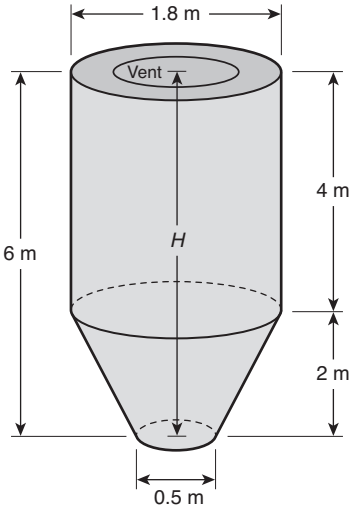

FIGURE A.6.4.3(a) Calculating *L/D* Ratio for a Cylindrical Vessel with a Hopper and a Top Vent.

(3) $A_{eff} = V_{eff}/H = 12.93/6 = 2.155\ m^2$.
(4) $D_{he} = 4 \cdot A_{eff}/p = (4 \cdot A_{eff}/\pi)^{0.5}$, assuming a cylindrical cross section.
(5) $D_{he} = 1.656$ m.
(6) $L/D = H/D_{he} = 6/1.656 = 3.62$.

In this example, D_{he} is less than the diameter of the cylindrical portion of the enclosure; thus *L/D* will be greater than if it had been calculated by taking the actual physical dimensions.

Example 2. Cylindrical enclosure with a hopper and vented at the side:

(1) H equals the vertical distance from the bottom of the hopper to the top of the vent = 4 m.
(2) V_{eff} equals the volume of the hopper plus the volume of the cylinder to the top of the vent.
(a) The volume of the cylindrical part = $(\pi \cdot D^2/4) \cdot h = [\pi \cdot (1.8)^2/4] \cdot 2 = 5.09\ m^3$.
(b) The volume of the hopper, with diameters D_1 and D_2 = $\pi \cdot h \cdot [(D_1)^2 + (D_1 \cdot D_2) + (D_2^2)] / 12 = \pi \cdot 2 \cdot [(2)^2 + (2 \cdot 0.5) + (0.5)^2] / 12 = 2.75\ m^3$.
(c) $V_{eff} = 5.09 + 2.75 = 7.84\ m^3$.
(d) V_{eff} is the shaded region in Figure A.6.4.3(b).
(3) $A_{eff} = V_{eff}/H = 7.84/4 = 1.96\ m^2$.
(4) $D_{he} = 4 \cdot A_{eff}/p = (4 \cdot A_{eff} / \pi)^{0.5}$, assuming a cylindrical cross section.
(5) $D_{he} = 1.58$ m.
(6) $L/D = H/D_{he} = 4/1.58 = 2.53$.

Example 3. Rectangular enclosure with a hopper and a side vent:

Copyright 2014 National Fire Protection Association (NFPA). Licensed, by agreement, for individual use and download on October 4, 2014 to LEADER and READER for designated user PATTARAPORN SRITRAKOOL. No other reproduction or transmission in any form permitted without written permission of NFPA. For inquires or to report unauthorized use, contact licensing@nfpa.org.

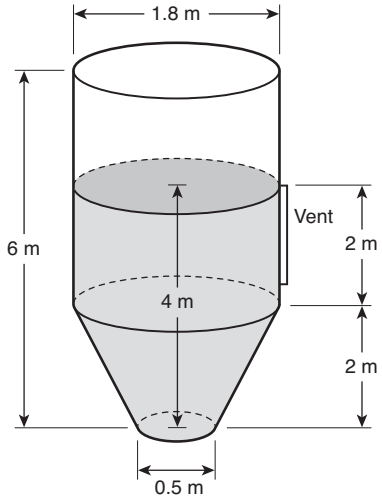

FIGURE A.6.4.3(b) Calculating *L/D* Ratio for a Cylindrical Vessel with a Hopper and a Side Vent.

(1) H equals the vertical distance from the bottom of the hopper to the top of the vent = 5 m.
(2) V_{eff} equals the volume of the hopper plus the volume of the rectangular vessel to the top of the vent.
   (a) The volume of the rectangular part = $A \cdot B \cdot h$ = $1.8 \cdot 1.5 \cdot 3 = 8.1$ m^3.
   (b) The volume of the hopper [see Figure A.6.4.3(c)] = $(a_1) \cdot h \cdot (b_2 - b_1)/2 + (b_1) \cdot h \cdot (a_2 - a_1)/2 + h \cdot (a_2 - a_1) \cdot (b_2 - b_1)/3 + (a_1) \cdot (b_1) \cdot h = (0.5) \cdot 2 \cdot (1.5 - 0.3)/2 + (0.3) \cdot 2 \cdot (1.8 - 0.5)/2 + 2 \cdot (1.8 - 0.5) \cdot (1.5 - 0.3)/3 + (0.5) \cdot (0.3) \cdot 2 = 2.33$ m^3.

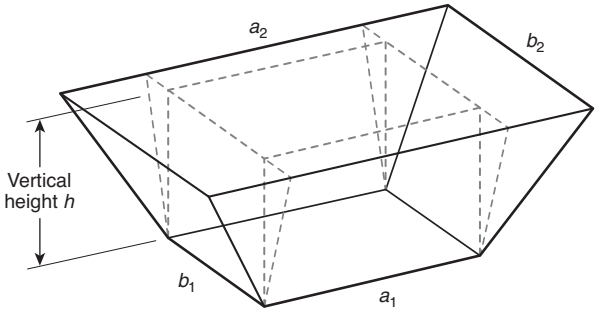

FIGURE A.6.4.3(c) Rectangular Hopper.

   (c) $V_{eff} = 8.1 + 2.33 = 10.43$ m^3.
   (d) V_{eff} is the shaded region in Figure A.6.4.3(d).
(3) $A_{eff} = V_{eff}/H = 10.43/5 = 2.09$ m^2.
(4) $D_{he} = 4 \cdot A_{eff}/p = (A_{eff})^{0.5}$, assuming a square cross section. $D_{he} = 1.44$ m.
(5) $L/D = H/D_{he} = 5/1.44 = 3.47$.

Example 4. Rectangular enclosure with a hopper and a side vent located close to the hopper:

(1) H equals the vertical distance from the top of the rectangular vessel to the bottom of the vent. H is the longest flame path possible because the vent is closer to the hopper bottom than it is to the vessel top = 4.5 m.

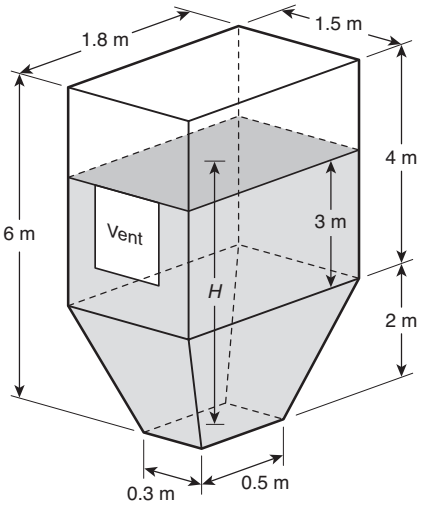

FIGURE A.6.4.3(d) Rectangular Enclosure with a Hopper and a Side Vent.

(2) V_{eff} equals the volume from the top of the rectangular vessel to the bottom of the vent.
   (a) $V_{eff} = A \cdot B \cdot h$
   (b) $V_{eff} = 1.8 \cdot 1.5 \cdot 4.5 = 12.15$ m^3.
   (c) V_{eff} is the shaded region in Figure A.6.4.3(e).

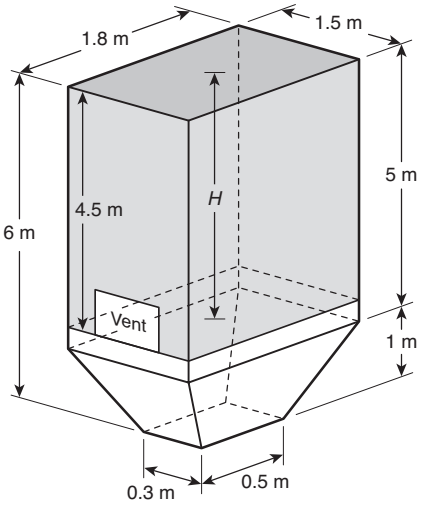

FIGURE A.6.4.3(e) Rectangular Enclosure with a Hopper and a Side Vent Close to the Hopper.

(3) $A_{eff} = V_{eff}/H = 12.1/4.5 = 2.7$ m^2.
(4) $D_{he} = 4 \cdot A_{eff}/p = 4 \cdot A_{eff}/[2 \cdot (A + B)]$. $D_{he} = 4 \cdot 2.7/[2 \cdot (1.8 + 1.5)] = 1.64$ m.
(5) $L/D = H/D_{he} = 4.5/1.64 = 2.74$.

Example 5. General calculation of the volume of a hopper.

(1) Rectangular hopper:

$$V = \frac{(a_1) \cdot (h) \cdot (b_2 - b_1)}{2} + \frac{(b_1) \cdot (h) \cdot (a_2 - a_1)}{2} + \frac{(h) \cdot (a_2 - a_1) \cdot (b_2 - b_1)}{3} + (a_1) \cdot (b_1) \cdot h$$

Copyright 2014 National Fire Protection Association (NFPA). Licensed, by agreement, for individual use and download on October 4, 2014 to LEADER and READER for designated user PATTARAPORN SRITRAKOOL. No other reproduction or transmission in any form permitted without written permission of NFPA. For inquires or to report unauthorized use, contact licensing@nfpa.org.

(2) Conical hopper:

$$V = \pi \cdot (h) \frac{\left[(D_1)^2 + (D_1 \cdot D_2) + (D_2)^2 \right]}{12}$$

where:
D_1 = diameter of the base
D_2 = diameter of the top

Example 6. Two vents, slightly offset vertically but on opposite sides of the enclosure [see Figure A.6.4.3(f)]. Because the vents overlap along the vertical axis, V_{eff} equals the volume from the bottom of the rectangular vessel to the top of the highest vent.

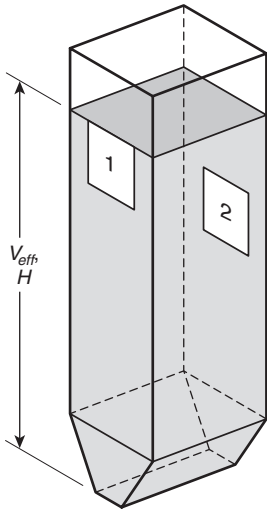

FIGURE A.6.4.3(f) Rectangular Enclosure, with a Hopper and Two Vents on Opposite Sides of the Enclosure.

Example 7. Two vents located on the same vertical line, offset from each other along the central axis, with the upper vent top located at the top of the enclosure [see Figure A.6.4.3(g)]. With multiple vents along the central axis, V_{eff} for the bottom vent is the volume from the bottom of the enclosure to the top of the lowest vent. V_{eff} for the next vent is the volume from the top of the lower vent to the top of the upper vent.

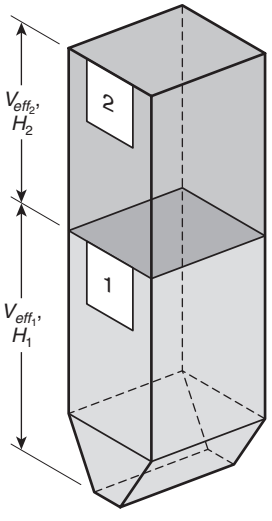

FIGURE A.6.4.3(g) Rectangular Enclosure with a Hopper and Two Vents on the Same Vertical Line.

A.6.4.4 The design of deflagration vents and vent closures necessitates consideration of many variables, only some of which have been investigated in depth. The technical literature reports extensive experimental work on venting of deflagrations in large enclosures. Equations have been developed that can be used for determining the necessary vent areas for enclosures [101]. The calculated vent area depends on several factors, including the size and strength of the enclosure, the characteristics of the fuel-oxidant mixture, and the design of the vent itself. The design techniques use one or more empirical factors that allow simplified expressions for the vent area. The design factors are the result of analyses of numerous actual venting incidents and venting tests that have allowed certain correlations to be made. The user of this standard is urged to give special attention to all precautionary statements.

The reduced pressure, P_{red}, in a vented gas deflagration can be reduced significantly in certain situations by lining the enclosure interior walls with an acoustically absorbing material, such as mineral wool or ceramic fiber blankets. These materials inhibit acoustic flame instabilities that are responsible for high flame speeds and amplified pressure oscillations in deflagrations of initially quiescent gas-air mixtures in unobstructed enclosures.

Data [45] show the effects of using 50 mm (2 in.) thick glass wool linings for propane deflagrations in a 5.2 m^3 (184 ft^3) test vessel that is equipped with a 1 m^2 (10.8 ft^2) vent for which P_{stat} equals 24.5 kPa (3.6 psi). The value of P_{red} is 34 kPa (4.9 psi) in the unlined vessel and 5.7 kPa (0.8 psi) (that is, a reduction of 83 percent) where the glass wool lining is installed on two of the vessel interior walls.

Data [37] illustrate the effects of a 76 mm (3 in.) thick mineral wool lining for natural gas deflagrations that are centrally ignited in a 22 m^3 (777 ft^3) test vessel that is equipped with a 1.1 m^2 (11.8 ft^2) vent for which P_{stat} equals 8 kPa (1.2 psi). The measured values of P_{red} are approximately 60 kPa (8.7 psi) in the unlined vessel and approximately 8 kPa (1.2 psi) (that is, a reduction of 87 percent) where the lining is placed on the floor and three walls of the vessel.

Similar dramatic reductions in P_{red} have been obtained in propane deflagration tests in a 64 m^3 (2260 ft^3) enclosure using ceramic fiber blankets on three interior walls [102, 103].

A detailed discussion of the role of acoustic flame instabilities in vented gas deflagrations can be found in Solberg, Pappas, and Skramstad [44]. Acoustic flame instabilities and enclosure wall linings are important factors in unobstructed, symmetrical enclosures with ignition near the center of the enclosure. Other types of flame instabilities, such as those described in Solberg, Pappas, and Skramstad [44], that are not influenced by enclosure wall linings can have a greater influence on P_{red} in other situations.

Situations can occur in which it is not possible to provide calculated deflagration venting as described in Chapters 7 and 8. Such situations do not justify the exclusion of all venting. The maximum practical amount of venting should be provided because some venting could reduce the damage potential. In addition, consideration should be given to other protection and prevention methods, as found in NFPA 69, *Standard on Explosion Prevention Systems.*

Copyright 2014 National Fire Protection Association (NFPA). Licensed, by agreement, for individual use and download on October 4, 2014 to LEADER and READER for designated user PATTARAPORN SRITRAKOOL. No other reproduction or transmission in any form permitted without written permission of NFPA. For inquires or to report unauthorized use, contact licensing@nfpa.org.

A.6.4.5 The equations in Chapters 7 and 8 do not precisely predict the necessary vent area for all enclosures under all conditions. Certain data indicate that the gas-venting equations do not provide sufficient venting in every case [44, 98, 99]. Also, tests that involve extreme levels of both congestion and initial turbulence demonstrate that pressures that exceed those indicated by the equations can occur [42, 87]. Currently, however, the use of the equations is recommended based on successful industrial experience.

As the vent area increases, the reduced pressure for a given static activation pressure of the vent closure decreases. Open vents are generally more effective than covered vents. Vents with lightweight closures are more responsive than those with heavy closures.

A.6.5.1 If the vent discharges into a congested area, the pressure inside the vented enclosure increases. A major blast pressure can be caused by the ignition of unburned gases or dusts outside the enclosure.

If vents are fitted with closure devices that do not remain open after activation (i.e., self-closing), it should be recognized that a vacuum can be created where gases within the enclosure cool. Vacuum within the enclosure could result in equipment damage.

A.6.5.2.1 For further information, see *National Association of Corrosion Engineers Handbook*.

A.6.5.7 Explosion vents are produced with a tolerance, as specified by the manufacturer, in pressure terms (e.g., psi, bar) or as a fraction of the P_{stat} (±X%). When P_{stat} minus the manufacturing tolerance is less than the pressure produced by the design wind load, the vent could open if it is on the downwind side of the structure. ASCE/SEI, *Minimum Design Loads for Buildings and Other Structures*, and Factory Mutual datasheet 1-28 are two references for design wind loads. *NFPA 5000, Building Construction and Safety Code*, Section 35.9, references ASCE/SEI 7 to determine appropriate wind loads. When a vent closure for a building or room is constructed by the owner/operator, the manufacturing tolerance is understood to be determined based on the tolerance of the chosen listed shear or pull-through fasteners *(see 10.3.2)*. The nonventing wall sections should be designed to withstand higher pressures than the intended vent closure.

Example: A vent closure is to be located on a side wall section (zone 4) where the outward wind load design pressure, based on the basic wind speed (3-second gust), is 2.0 kPa. Determine the minimum P_{stat} design for a relieving wall section when the shear fasteners employed have a ±10 percent manufacturing tolerance.

Minimum wind load design pressure = 2.0 kPa (42 psf) = 0.02 bar
Shear fastener tolerance = ±10%
$P_{stat} \geq 0.022$ bar

A.6.5.8 When P_{stat}, including the manufacturing tolerance, is less than P_{red}, there would be no effect on performance. However, when P_{stat}, including the manufacturing tolerance, is higher than P_{red}, the actual P_{red} could be greater than expected. A minimum pressure separation of P_{stat}, including the manufacturing tolerance, from P_{red} prevents that from occurring.

Example:
P_{stat} = ±1.5 psig
Manufacturing tolerance = ±0.5 psig (±33%)
Vent release range = 1.0 to 2.0 psig
$P_{red} \geq 2.0$ psig

A.6.5.9 In some cases, ensuring dependable operation can necessitate replacing a vent closure.

A.6.6 Deflagration venting is provided for enclosures to minimize structural damage to the enclosure itself and to reduce the probability of damage to other structures. In the case of buildings, deflagration venting can prevent structural collapse. However, personnel within the building can be exposed to the effects of flame, heat, or pressure.

Damage can result if a deflagration occurs in any enclosure that is too weak to withstand the pressure from a deflagration. For example, an ordinary masonry wall [200 mm (8 in.) brick or concrete block 3 m (10 ft) high] cannot withstand a pressure difference from one side to the other of much more than 0.03 bar (0.5 psi).

Flames and pressure waves that emerge from an enclosure during the venting process can injure personnel, ignite other combustibles in the vicinity, result in ensuing fires or secondary explosions, and result in pressure damage to adjacent buildings or equipment. The amount of a given quantity of combustible mixture that is expelled from the vent, and the thermal and pressure damage that occurs outside of the enclosure, depends on the volume of the enclosure, the vent opening pressure, and the magnitude of P_{red}. In the case of a given enclosure and a given quantity of combustible mixture, a lower vent opening pressure results in the discharge of more unburned material through the vent, resulting in a larger fireball outside the enclosure. A higher vent opening pressure results in more combustion taking place inside the enclosure prior to the vent opening and higher velocity through the vent. *(See 6.2.3.)* The fireball from vented dust deflagrations is potentially more hazardous than from vented gas deflagrations, because large quantities of unburned dust can be expelled and burned during the venting process.

Deflagration venting generates pressure outside the vented enclosure. The pressure is caused by venting the primary deflagration inside the enclosure and by venting the secondary deflagration outside the enclosure.

A.6.6.2.3 A deflector is considered to be a specific subset of the general concept of a barrier. Walls or three-sided containment constructions are used to minimize the hazard of fragments and flame impingement from a deflagration; however, if the wall is too close or if the containment volume is too small, P_{red} will increase and pressure will build between the barrier and the vent. The effectiveness of the wall is limited to the area immediately behind it. Pressure and flame effects will reform at some point downstream of the wall.

A.6.6.2.4 Other deflector designs are possible, but design information is not available at this time. An alternative could be to use a vent duct consisting of a long radius elbow, accounting for the effect of vent area according to Chapter 8 for dusts. A vertical barrier wall could result in higher P_{red} or larger radial hazard distance than an angled deflector, and no design guidance can be given.

A.6.6.2.5 A deflector inclined at 45 to 60 degrees can be applied to larger vessels to protect personnel as long as it is installed more than 1.5D from the vent opening so as to not increase P_{red}. The ability of this deflector to limit flame length for these larger vessels is uncertain.

Copyright 2014 National Fire Protection Association (NFPA). Licensed, by agreement, for individual use and download on October 4, 2014 to LEADER and READER for designated user PATTARAPORN SRITRAKOOL. No other reproduction or transmission in any form permitted without written permission of NFPA. For inquires or to report unauthorized use, contact licensing@nfpa.org.

A.6.7.1 Table A.6.7.1 demonstrates the effect of vent mass on P_{red}.

Table A.6.7.1 Reduced Pressure (P_{red}) Developed During Deflagration Venting and Influenced by Mass of Vent Closure, 5 Percent Propane in Air, Enclosure Volume = 2.6 m³ [95]

Vent Closure Mass		Static Opening Pressure (P_{stat}) (m-bar)	Vent Closure Response Time (m-s)	Reduced P_{red} (m-bar)
kg/m²	lb/ft²			
0.3563	0.073	103	14.5	156
3.32	0.68	96	31.0	199
11.17	2.29	100	42.6	235
20.79	4.26	100	54.0	314

Notes:
(1) $L/D = 2.3$.
(2) Test series reported = #17, #1, #3, and #4.
(3) $A_v = 0.56$ m² (6.0 ft²).

A.6.7.2 The preponderance of the available test data indicates that P_{red} increases with panel density. These data have been used to develop the equations in this document. However, a limited amount of data demonstrates exceptions to this trend, especially for initially quiescent gas mixtures where venting-induced turbulence dominates P_{red}.

The greater the mass of the closure, the longer the closure takes to clear the vent opening completely for a given vent opening pressure. Conversely, closures of low mass move away from the vent opening more quickly, and venting is more effective.

A.6.7.4 The free area of a vent does not become fully effective in relieving pressure until the vent closure moves completely out of the way of the vent opening. Until this occurs, the closure obstructs the combustion gases that are issuing from the vent.

In general, a hinged vent closure results in a higher P_{red} than does a rupture diaphragm. The hinged vent closure with its geometric area, A_1, mass, and static relief pressure, P_{stat}, is tested in position on an enclosure under suitable conditions of gas K_G or dust K_{St}, and ignition that closely replicate the intended installation. The P_{red} is determined experimentally under these conditions, and P_{red} is related to a corresponding vent area, A_2, for an inertialess vent closure such as a rupture diaphragm, which relieves at the same P_{stat} and gives the same P_{red}.

The venting efficiency is given by the following equation:

$$E = \left(\frac{A_2}{A_1}\right) \cdot 100 = \text{percent efficiency} \qquad \textbf{(A.6.7.4)}$$

where:
E = venting efficiency
A_2 = vent area for inertialess vent closure
A_1 = vent area for hinged vent closure

For similarly designed hinged closures, the vent area determined by use of equations in Chapter 7 or Chapter 8 should be corrected by dividing by the demonstrated fractional efficiency of the hinged vent closure. This correction would include the otherwise modeled effect of increased inertia. Annex F provides an alternative method to account for hinged closures when dealing with dusts.

A.6.8.5 The addition of a vent duct can substantially increase the pressure developed in a vented enclosure.

A.6.8.7.2 A long-radius bend nominally has a minimum radius along the center line of 1.5 duct diameters.

A.6.9 Deflagration venting systems have been developed that have a rupture membrane for venting coupled with flame-arresting and particulate retention elements, as shown in Figure A.6.9. These devices are purposely built with two functional components: flame-arresting elements, which serve to extinguish the flame front, and particulate retention elements, which minimize the passage of particulates. As a deflagration is vented through the system, any burned and unburned dust is retained within the device. Combustion gases are cooled, and no flame emerges from the system. In addition, near-field blast effects (overpressure) are greatly reduced outside the system.

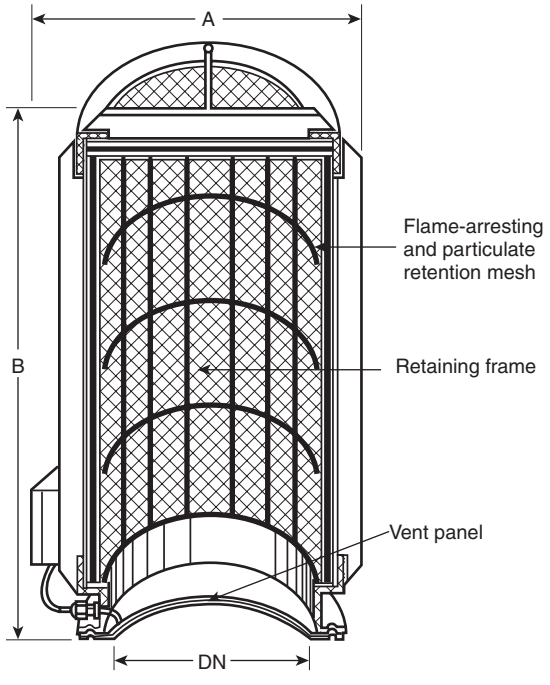

FIGURE A.6.9 Example of Flame-Arresting and Particulate-Retention Vent System.

A.6.9.1 Even with complete extinguishment of flame, the area immediately surrounding the vent can experience overpressure and radiant energy. It is not possible to expect absolute retention of burnt and unburnt particulates, as demonstrated by testing. A minimal release is unavoidable and needs to recognized where toxic or chemically active materials are being processed.

A.6.9.3 The increased flow resistance due to the flame-arresting elements and the retention of particulates could result in decreased venting efficiency. which should be determined by test.

A.6.9.4 It is essential that the user work closely with the manufacturer to ensure that all the parameters are addressed for a safe, reliable installation.

A.6.9.5 Venting indoors affects the building that houses the protected equipment due to increased pressurization of the

Copyright 2014 National Fire Protection Association (NFPA). Licensed, by agreement, for individual use and download on October 4, 2014 to LEADER and READER for designated user PATTARAPORN SRITRAKOOL. No other reproduction or transmission in any form permitted without written permission of NFPA. For inquires or to report unauthorized use, contact licensing@nfpa.org.

surrounding volume *(see also Section 8.10)*. Venting indoors increases the potential for secondary explosions. Particulate deposits in the immediate area can be dislodged by the pressure wave and generate a combustible dust cloud.

A.6.9.6 The presence of flame-arresting elements will prevent direct observation of the condition of the pressure relief elements as required in 11.4.4. It is necessary to know that the venting device has not opened or been exercised. An open vent would permit dust to accumulate within the device and compromise its performance. Likewise, a resetting device would permit dust accumulation if it were to open occasionally due to excess process pressure or other causes. Knowledge that the vent has opened or the resetting device has been exercised would permit corrective actions.

A.6.9.7 The greater release of dust and radiant energy to the surrounding area is the basis for this restriction.

A.6.9.8 Burnt and unburnt fuel might be left in the flame-arresting and pressure-relieving elements, potentially affecting efficiency. Exposure to a deflagration can be expected to affect the performance of the pressure-relieving elements.

A.7.1.1 The user is cautioned that fast-burning gas deflagrations can readily undergo transition to detonation. NFPA 69, *Standard on Explosion Prevention Systems*, provides alternative measures that should be used.

A.7.1.2 The following information is offered to aid the user in determining an appropriate burning velocity to use when dealing with aerosols (mists).

The burning velocity of aerosols varies according to the fuel-to-air ratio, droplet diameter, and vapor fuel–to–total fuel ratio (Ω), as illustrated in Figure A.7.1.2(a). The burning velocity ratio is the ratio of the mist fundamental burning velocity to that of the pure vapor. The effect of increased burning velocity in the range of 5 µm to 35 µm is believed to be evident primarily in fluids of relatively low volatility, such as heat transfer fluids, that can be released above their atmospheric boiling point. In those circumstances, they can form an aerosol consisting of very small droplets that can fall into the 5 to 35 µm range.

The general effect of burning velocity on liquid mists released below their flash points in the order of 50 µm as compared with dusts of similar particle size and vapors is shown in Figure A.7.1.2(b).

The dimensionless Spalding mass transfer number (B) is defined as follows:

$$B = \frac{q_{st}H + C_{pa}\left(T_g - T_b\right)}{L + C_p\left(T_b - T_s\right)}$$

where:

q_{st} = mass ratio of fuel to air at stoichiometric concentration
H = heat of combustion
C_{pa} = specific heat of air
T = temperature of the gas (g), boiling point of the fuel (b), surface temperature of the fuel (s)
L = latent heat of vaporization
C_p = specific heat of the fuel

At the time of this writing, the committee is unaware of any aerosol testing that has definitively correlated deflagrations of small droplet diameter (0 to 30 µm) aerosols to vent area. This information is provided as a word of warning [117].

A.7.2.2.2 Annex D lists values of S_u for many gases and vapors.

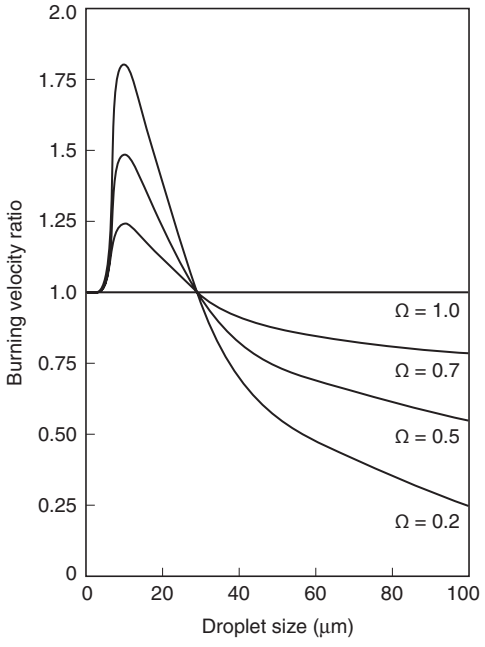

FIGURE A.7.1.2(a) Burning Velocity Predictions Versus Aerosol Droplet Size at Different Values of Ω.

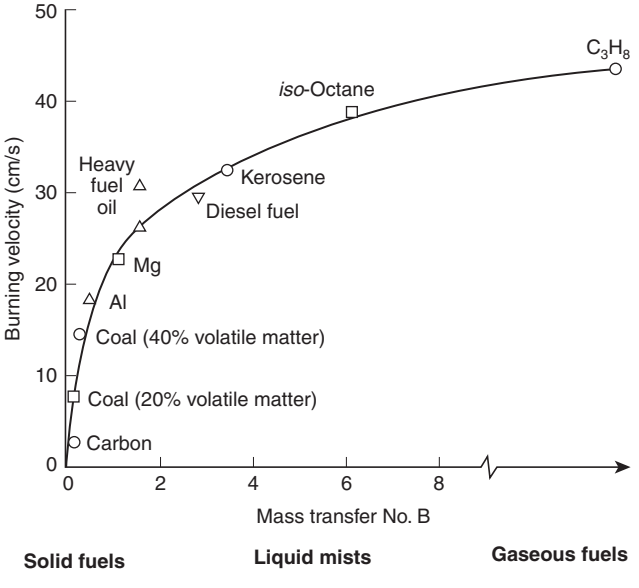

FIGURE A.7.1.2(b) Burning Velocity of Mixtures of Air with Flammable Vapors, Aerosols, or Dusts. (Reprinted from Lees, *Lees Loss Prevention in the Process Industries*.)

A.7.2.5 Following is a sample calculation of internal surface area:

Step 1. Consider the building illustrated in Figure A.7.2.5(a), for which deflagration venting is needed.

Step 2. Divide the building into sensible geometric parts (Parts 1 and 2) as shown in Figure A.7.2.5(b).

Step 3. Calculate the total internal surface area in each part of the building.

Copyright 2014 National Fire Protection Association (NFPA). Licensed, by agreement, for individual use and download on October 4, 2014 to LEADER and READER for designated user PATTARAPORN SRITRAKOOL. No other reproduction or transmission in any form permitted without written permission of NFPA. For inquires or to report unauthorized use, contact licensing@nfpa.org.

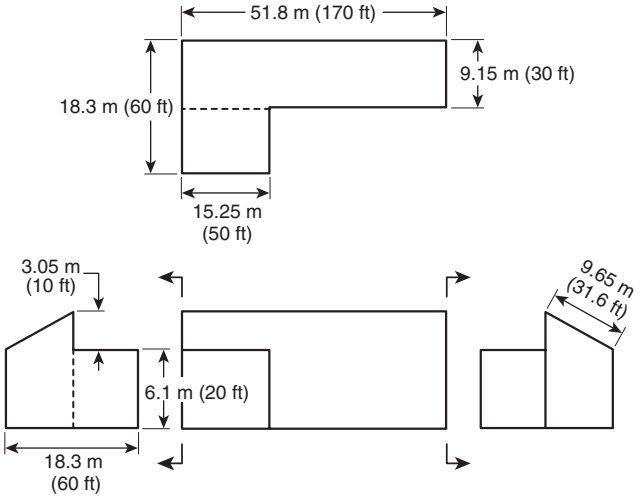

FIGURE A.7.2.5(a) Building Used in Sample Calculation, Version I (Not to Scale).

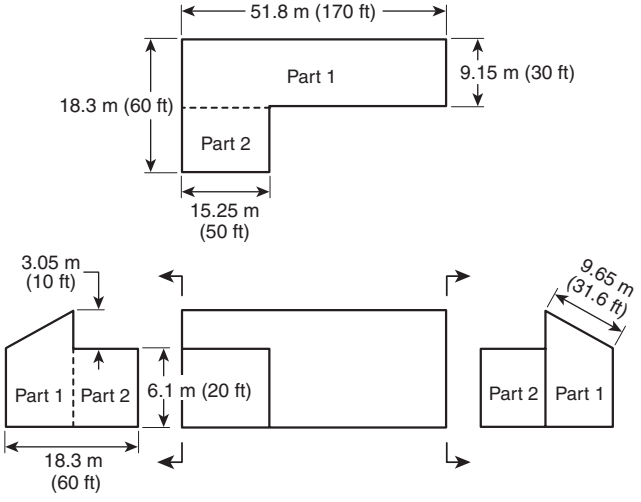

FIGURE A.7.2.5(b) Building Used in Sample Calculation, Version II (Not to Scale).

Part 1 Surface Area (A_{S1})

Floor	= 51.8 m × 9.15 m = 474 m^2 (170 ft × 30 ft = 5100 ft^2)
Roof	= 51.8 m × 9.65 m = 499 m^2 (170 ft × 31.6 ft = 5372 ft^2)
Rear wall	= 51.8 m × 6.1 m = 316 m^2 (170 ft × 20 ft = 3400 ft^2)
Front wall	= (36.6 m × 9.15 m) + (15.25 m × 3.05 m) = 381 m^2 [(120 ft × 30 ft) + (50 ft × 10 ft)] = 4100 ft^2
Side walls (rectangular part)	= 2 × 9.15 m × 6.1 m = 111 m^2 (2 × 30 ft × 20 ft = 1200 ft^2)
Side walls (triangular part)	= 9.15 m × 3.05 m = 28 m^2 (30 ft × 10 ft = 300 ft^2)
Total Part 1: A_{S1}	= 1809 m^2 (19,472 ft^2)

Part 2 Surface Area (A_{S2})

Floor	= 15.25 m × 9.15 m = 139 m^2 (50 ft × 30 ft = 1500 ft^2)
Roof	= 15.25 m × 9.15 m = 139 m^2 (50 ft × 30 ft = 1500 ft^2)
Front wall	= 15.25 m × 6.1 m = 93 m^2 (50 ft × 20 ft = 1000 ft^2)
Side walls	= 2 × 9.15 m × 6.1 m = 111 m^2 (2 × 30 ft × 20 ft = 1200 ft^2)
Total Part 2: A_{S2}	= 483 m^2 (5200 ft^2)

Step 4. Thus, the total internal surface area for the whole building, A_S, is expressed as follows:

A_S = 1809 m^2 (19,472 ft^2) + 483 m^2 (5200 ft^2) = 2292 m^2 (24,672 ft^2)

A.7.2.5.1 The calculated vent area can be reduced by the installation of a pressure-resistant wall to confine the deflagration hazard area to a geometric configuration with a smaller internal surface area, A_S.

A.7.2.5.1.5 Such rooms include adjoining rooms separated by a partition incapable of withstanding the expected pressure.

A.7.2.6 In many industrial enclosures, the gas phase is present in a turbulent condition. An example is the continuous feed of a flammable gas-oxidant mixture to a catalytic partial oxidation reactor. Normally this mixture enters the reactor head as a high-velocity turbulent flow through a pipe. As the gas enters the reactor head, still more turbulence develops due to the sudden enlargement of the flow cross section. Appurtenances within an enclosure enhance turbulence.

The susceptibility of a turbulent system to detonation increases with increasing values of the fundamental burning velocity. In particular, compounds that have values close to that of hydrogen are highly susceptible to detonation when ignited under turbulent conditions. It should be noted that venting tends to inhibit the transition from deflagration to detonation, but it is not an effective method of protecting against the effects of a detonation once the transition has occurred. Where the likelihood for detonation exists, alternative solutions, such as those in NFPA 69, *Standard on Explosion Prevention Systems*, should be considered.

A.7.3.1 Where M is greater than 40 kg/m^2, it is necessary to perform testing or apply alternative explosion protection methods per NFPA 69, *Standard on Explosion Prevention Systems*.

A.7.4 The deflagration vent area requirement is increased where a vent discharge duct is used. Where a deflagration is vented through a vent duct, secondary deflagrations can occur in the duct, reducing the differential pressure available across the vent.

A.7.4.1 The use of a vent duct with a cross section greater than that of the vent can result in a smaller increase in the pressure that develops during venting, P_{red}, than when a vent duct of an equivalent cross section is used [93], but this effect is difficult to quantify because of limited test data.

Vent ducts should be as short and as straight as possible. Any bends can cause dramatic and unpredictable increases in the pressure that develops during venting.

It should be noted that P_{red} is still the maximum pressure developed in a vented deflagration. P'_{red} is not an actual pressure.

Copyright 2014 National Fire Protection Association (NFPA). Licensed, by agreement, for individual use and download on October 4, 2014 to LEADER and READER for designated user PATTARAPORN SRITRAKOOL. No other reproduction or transmission in any form permitted without written permission of NFPA. For inquires or to report unauthorized use, contact licensing@nfpa.org.

A.7.4.3 Testing has been done with 3 m (10 ft) and 6 m (20 ft) duct lengths. The effect of ducts longer than 6 m (20 ft) has not been investigated.

A.7.4.5 Flames and pressure waves that discharge from the enclosure during venting represent a threat to personnel and could damage other equipment.

A.7.4.5.1 If a vented enclosure is located within a building, it should be placed close to an exterior wall so that the vent ducts are as short as possible.

A.7.4.6 The use of a vent duct with a larger cross section than that of the vent can result in a smaller increase in the pressure that develops during venting (P_{red}) than when a vent duct of an equivalent cross section is used [93], but this effect is difficult to quantify because of limited test data. A special requirement for vent duct cross sections in situations where the vent closure device is a hinged panel is discussed in A.6.7.4.

A.7.4.7 In general, bends can cause increases in the pressure that develops during venting.

A.7.5.1.1 If pressure excursions are likely during operation, the value of P_0 can be the maximum pressure excursion during operation or the pressure at the relief valve when in the fully open position.

A.7.5.1.2 Venting from enclosures at initially elevated pressures results in severe discharge conditions.

A.7.6.2 Such a design ensures that the flow of combustion gases is not impeded by an obstructed closure.

A.7.6.3 A vent closure can open if personnel fall or lean on it.

A.7.6.4 Situations can arise in which the roof area or one or more of the wall areas cannot be used for vents, either because of the location of equipment or because of exposure to other buildings or to areas normally occupied by personnel.

A.7.7 The fireball from a vented gas or dust deflagration presents a hazard to personnel in the vicinity. People caught in the flame itself will be at obvious risk from burns, but those who are outside the flame area can be at risk from thermal radiation effects. The heat flux produced by the fireball, the exposure time, and the distance from the fireball are important variables to determine the hazard.

The number of vents, n, should be those vents whose discharge directions are separate and evenly distributed around the circumference of a vessel or along the central axis. If multiple vent panels cover a single vent opening, they should not be treated as separate for this purpose.

A.8.1.2 The K_{St} values of dusts of the same chemical composition vary with physical properties such as the size and shape of the dust particle and moisture content. The K_{St} values published in tables are, therefore, examples and represent only the specific dusts tested. *(See Annex B.)* Mechanical processes that increase particle specific surface area, such as grinding, typically increase the K_{St} value. The K_{St} value needs to be verified by specific test of a dust that has been created by the process that created the dust.

A.8.2.3.1 Conventional top-fed bins, hoppers, and silos are not expected to have large volumes occupied by homogeneous, worst-case dust concentrations. Furthermore, high-turbulence regions in these enclosures are usually limited to the top of the enclosure.

A.8.2.5.2 The equipment cross-sectional area for flow along the vessel axis would be $A = \pi D^2/4$ for round equipment or $A = D_1 \times D_2$ for rectangular equipment. An example is shown in Figure A.8.2.5.2.

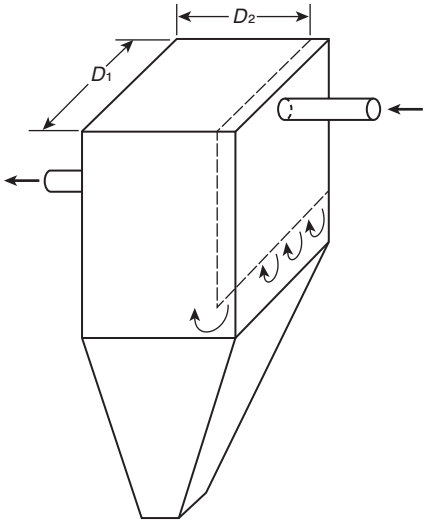

FIGURE A.8.2.5.2 Example of the Cross-Sectional Area of a Complex Enclosure.

For other geometries, the intention is to determine the average velocity in the equipment, ignoring inlet and outlet disturbances.

A.8.2.5.3 The tangential velocity in particulate processing equipment can be generated either by a tangential inlet flow (as in most cyclone dust collectors) or by internal parts within the equipment (as in blenders, hammermills, etc.). In the case of tangential inlet flow, $v_{tan_max} = Q/A_{in}$, where Q is the tangential inlet airflow rate (m^3/s), and A_{in} is the inlet cross-sectional area (m^2). In the case of equipment with rotating internal parts,

$$v_{tan_max} = \frac{2 \cdot (3.14) \cdot N \cdot r}{60} \qquad \textbf{(A.8.2.5.3)}$$

where:
N = number of revolutions per minute of the moving parts
r = radial length (m) of the largest moving part

In the case where the tangential flow is generated by stationary guide vanes and similar internal parts, the determination of v_{tan_max} is more complicated and requires expert analysis or testing.

A.8.2.5.7 The use of a velocity of 20 m/s and 56 m/s to separate the vent area requirements is based on a combination of the data used to derive Equation 8.2.2 (the general area correlations) and the Tamanini 1990 data [103] in Figure A.8.2.5.7 showing how the effective K_{St} varies with the root-mean-square (rms) turbulence velocity in the vented enclosure. The figure is based on values of K_{St} calculated from the nomographs in NFPA 68, plotted as a function of the mean turbulence intensity in the time period when the pressure rise is between 20 percent and 80 percent of maximum value. Because it is difficult to measure rms turbulence velocities in operating equipment, a turbulence intensity of 10 percent has been assumed, such that the effective

Copyright 2014 National Fire Protection Association (NFPA). Licensed, by agreement, for individual use and download on October 4, 2014 to LEADER and READER for designated user PATTARAPORN SRITRAKOOL. No other reproduction or transmission in any form permitted without written permission of NFPA. For inquires or to report unauthorized use, contact licensing@nfpa.org.

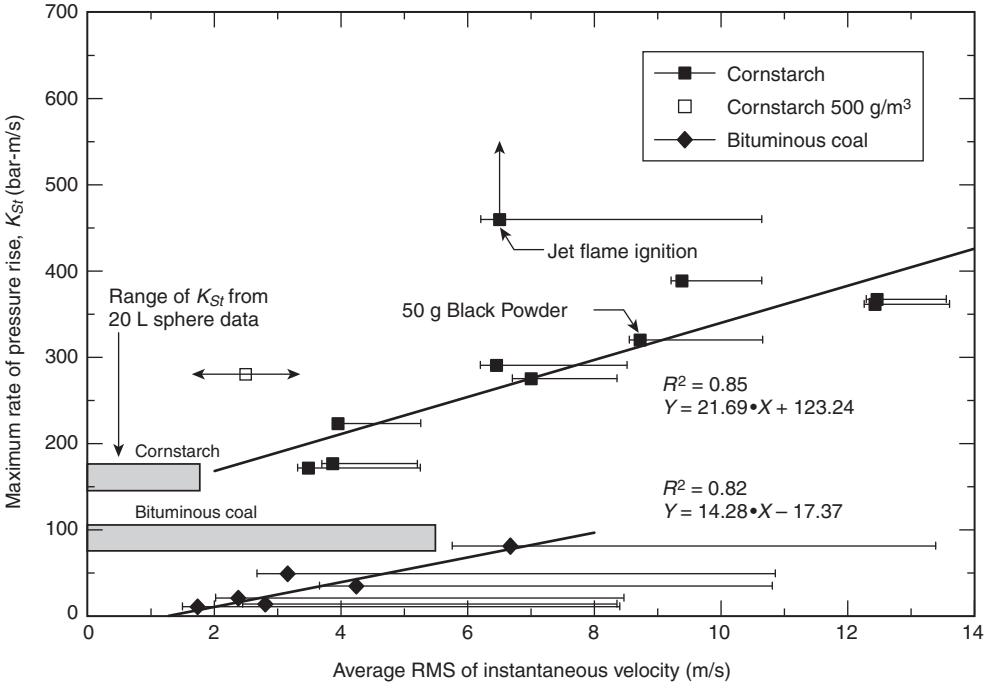

FIGURE A.8.2.5.7 Explosion Severity for Vented Tests in the FMRC 2250 ft³ Chamber.

rms turbulence velocity is 10 percent of the average air velocity in the operating equipment. Therefore, most users would be able to calculate the average velocity when deciding which vent area equation to use.

The 20 m/s and 56 m/s delineating velocities were determined by calculating effective K_{St} values that would be consistent with the combinations of A_v, V, and P_{red} from the Tamanini cornstarch data at an rms turbulence intensity of about 2 m/s for Equation 8.2.2 and for a higher rms velocity as determined by the correlation between K_{St} and rms velocity in Figure A.8.2.5.7.

A.8.2.5.8 Building-damaging dust explosions are most often secondary dust explosions, where an initial disturbance or smaller ignition causes a high local turbulence, creating the dust cloud with immediate ignition. To provide enough venting to prevent building failure and additional personnel injury, the high-end turbulence correction factor of 1.7 is used for buildings.

A.8.2.6 Where M is greater than 40 kg/m², see Annex G for guidance. For rectangular panels that are not square, a reduction of the required panel area could be gained by calculating the panel inertia effect per Annex G instead of Equation 8.2.8.

A.8.3 Dust concentrations in some process equipment and buildings are inherently limited to only a fraction of the enclosure volume.

A.8.3.2 Figure A.8.3.2 illustrates the limits of partial volume corrections. At low normalized reduced pressures, $\prod$, the vent ratio approaches the fill fraction to the ⅙ power. When fill fraction approaches $\prod$, both the vent ratio and the necessary vent area approach zero. Subsections 8.3.3 and 8.3.4 provide a method for determining the fill fraction for process vessels and for buildings, respectively.

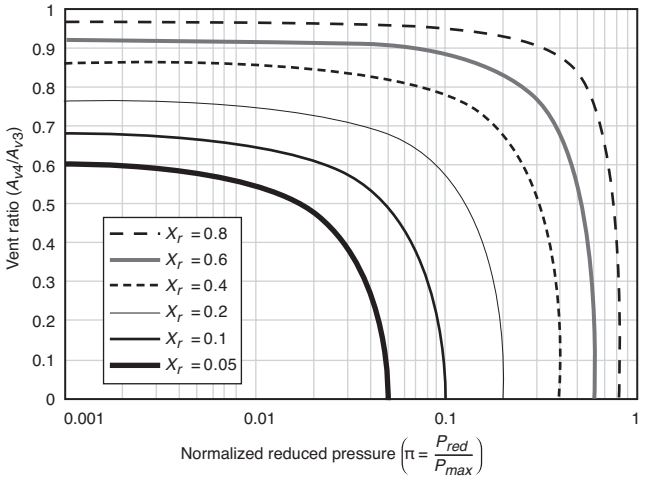

FIGURE A.8.3.2 Partial Volume Vent Area Reduction.

A.8.3.3 The fill fraction in a spray dryer depends on the dryer design. In the case of a top-loading conical dryer without any recirculation or co-feed of dry product, measurements have indicated that the dry powder concentrations exist only in the bottom portion of the dryer, which typically occupies 20 percent to 35 percent of the total dryer volume.

Process Equipment Example. A 100 m³ spray dryer with a length/diameter ratio of 1.8 is processing a material with a P_{max} of 10 bar and a K_{St} of 100 bar-m/s at the dryer operating temperature. The deflagration vent design is to be based on a P_{red} of 0.50 bar and a P_{stat} of 0.10 bar. Tests by the manufacturer, submitted and approved by the authority having jurisdiction, have shown that the dry material is confined to the

Copyright 2014 National Fire Protection Association (NFPA). Licensed, by agreement, for individual use and download on October 4, 2014 to LEADER and READER for designated user PATTARAPORN SRITRAKOOL. No other reproduction or transmission in any form permitted without written permission of NFPA. For inquires or to report unauthorized use, contact licensing@nfpa.org.

conical lower section of the dryer, which has a volume of 33.3 m^3. Therefore, $X_r = 0.333$, and $\prod = 0.50/10 = 0.050$.

Step 1. Using Equation 8.2.2, find A_{v0}:

$$A_{v0} = 1 \cdot 10^{-4} \cdot \left[1 + 1.54 \cdot (0.10)^{4/3}\right] \cdot 100 \cdot (100)^{3/4} \cdot \sqrt{\frac{10}{0.50} - 1}$$

$$A_{v0} = 1.48 \text{ m}^2$$

Step 2. Find the partial volume vent area for this application as follows:

$$A_{v4} = (1.48) \cdot (0.333)^{-0.333} \cdot \sqrt{\frac{(0.333 - 0.050)}{1 - 0.050}} = 1.16 \text{ m}^2$$

Step 3. Install vent panels with a total vent area of at least 1.16 m^2 on the conical lower section of the dryer.

A.8.3.4.3.3 The approximate surface density, $\bar{M}/A$, corresponding to these assumed values is 950 g/m^2.

A.8.4.1 There are no additional conditions on the use of Equation 8.4.1 when enclosure pressure is initially less than –0.2 bar.

A.8.4.2 Figure A.8.4.2 shows typical results for evaluation of Equation 8.4.1 over a range of initial pressures at the same value of P_{stat}. Such an evaluation is necessary to determine the maximum value of the correction factor over the range between operating pressure and atmospheric pressure. While ignition cannot occur at very low initial pressures, the equation calculates a greatly reduced vent area for these conditions. A maximum value of the vent area correction occurs somewhere in the range of –0.2 and –0.5 bar. Since the ignition could occur at any pressure between operating pressure and atmospheric pressure, sizing for the maximum correction within this range is appropriate. The form of the equation does not allow evaluation above a positive initial pressure greater than P_{stat}. Similarly, the equation does not allow evaluation when $1/\Pi_{effective}$ is less than 1.

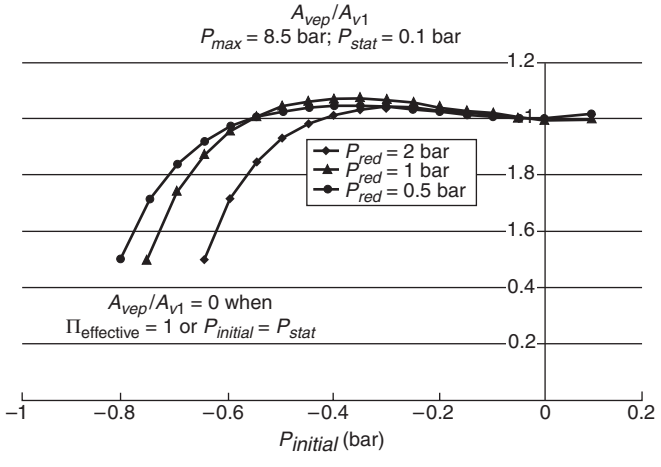

FIGURE A.8.4.2 Typical Effect of Initial Pressure on Required Vent Area.

A.8.5 The flow resistance coefficient K for the vent duct correlation is defined on the static pressure drop, ΔP, from the enclosure to the duct exit at a given average duct flow velocity, U:

$$K \equiv \frac{\Delta P}{\frac{1}{2} \cdot \rho \cdot U^2}$$

Another convention used by some reference books is to define K on the total pressure drop or on another velocity scale. The user should ensure that the loss coefficients used in the calculations are consistent with the definition of K adopted for the vent duct calculations. See Ural [114] for additional information.

The user should note that inlet loss can vary depending on the shape of the vent closure inlet; however, most typically a flanged inlet would be appropriate. Figure A.8.5(a) shows the loss coefficient for two different inlet designs.



FIGURE A.8.5(a) Loss Coefficients for Inlets.

Figure A.8.5(b) shows a round elbow and loss coefficents for various radii of curvature. Figure A.8.5(c) shows a rectangular elbow and loss coefficients for various duct aspect ratios and radii of curvature. Loss coefficients for 45 degree bends and 30 degree bends are proportionally less than the tabulated 90 degree bends. Figure A.8.5(d) provides loss coefficients for a typical rain hat design.

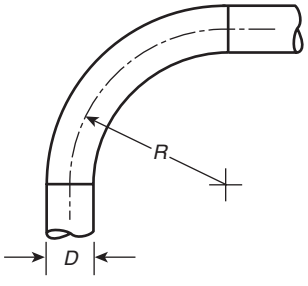

R/D	K
2.75	0.26
2.50	0.22
2.25	0.26
2.00	0.27
1.75	0.32
1.50	0.39

FIGURE A.8.5(b) Loss Coefficients for Round Elbows.

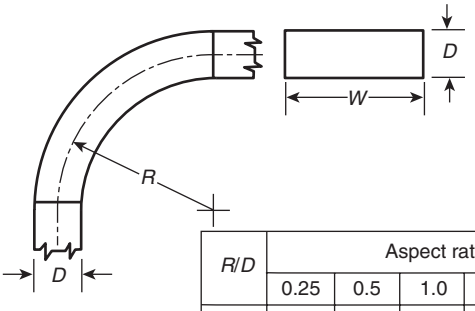

R/D	Aspect ratio, W/D					
	0.25	0.5	1.0	2.0	3.0	4.0
1.5	0.28	0.18	0.13	0.13	0.12	0.12
2.0	0.24	0.15	0.11	0.11	0.10	0.10
3.0	0.24	0.15	0.11	0.11	0.10	0.10

FIGURE A.8.5(c) Loss Coefficients for Square and Rectangular Elbows.

Copyright 2014 National Fire Protection Association (NFPA). Licensed, by agreement, for individual use and download on October 4, 2014 to LEADER and READER for designated user PATTARAPORN SRITRAKOOL. No other reproduction or transmission in any form permitted without written permission of NFPA. For inquires or to report unauthorized use, contact licensing@nfpa.org.

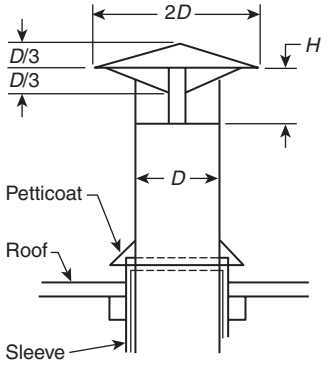

H No. of Diameters	K
1.0 D	0.10
0.75 D	0.18
0.70 D	0.22
0.65 D	0.30
0.60 D	0.41
0.55 D	0.56
0.50 D	0.73
0.45 D	1.0

FIGURE A.8.5(d) Loss Coefficients for Rain Hats.

The equations are nonlinear and, under certain combinations of input values, result in two possible solutions for vent area for a given P_{red}. The lower value of vent area is the meaningful solution, and the upper value is an artifact of the form of the equation set. There are certain combinations of P_{red} and vent duct length where no vent area is large enough and no solution is obtainable. When that occurs, it could be possible to vary P_{red} or vent duct length to converge to a solution. If that solution is not satisfactory, NFPA 69, *Standard on Explosion Prevention Systems*, can provide alternatives.

There is a minimum value for P_{red} as vent area increases, beyond which solutions are not meaningful. That value occurs approximately when the volume of the duct exceeds a fraction of the volume of the vessel. When solving the equations, constraining A_{vf} as follows will typically isolate the smaller root:

$$\frac{A_{vf} \cdot L}{V} \leq 1$$

For the following input values, Figure A.8.5(e) illustrates the potential solutions:

$V = 500\ m^3$
$P_{max} = 8.5$ bar
$K_{St} = 150$ bar-m/s
$P_{stat} = 0.05$ bar
$P_{red} = 0.5$ bar
Vessel $L/D = 4$
$\varepsilon = 0.26$ mm
Straight duct, no elbows, fittings, or rain hats.

Example problem. Given Figure A.8.5(f) and the following conditions, calculate P_{red}:

Enclosure volume, $V = 25\ (m^3)$
Enclosure $L/D = 4$
Vent diameter, $D_v = 1.5$ (m)
Duct diameter, $D_h = 1.5$ (m)
$A_v = 1.77\ (m^2)$
$P_{stat} = 0.25$ (bar-g)
$K_{St} = 200$ (bar-m/s)
$P_{max} = 8$ (bar)
Duct length = 12 (m)
Duct effective roughness, $\varepsilon = 0.26$ (mm)
Elbows = 2 × 90 degrees
Elbow flow resistance = 2 × 1.2 = 2.4
Rain hat flow resistance = 0.75

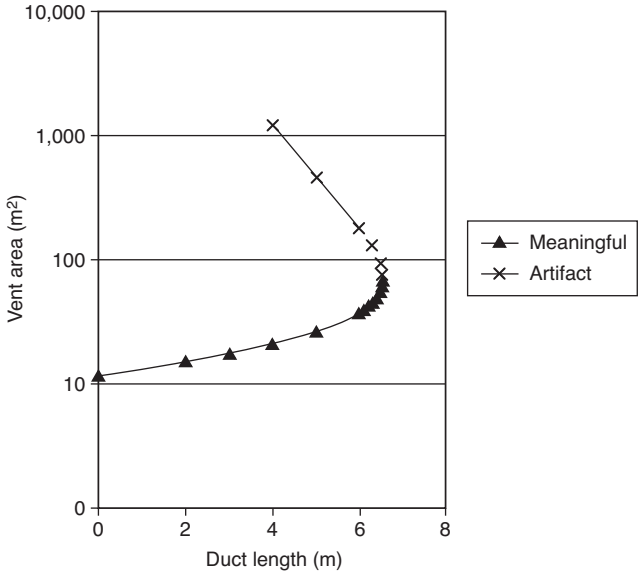

FIGURE A.8.5(e) A_v vs. Duct Length.

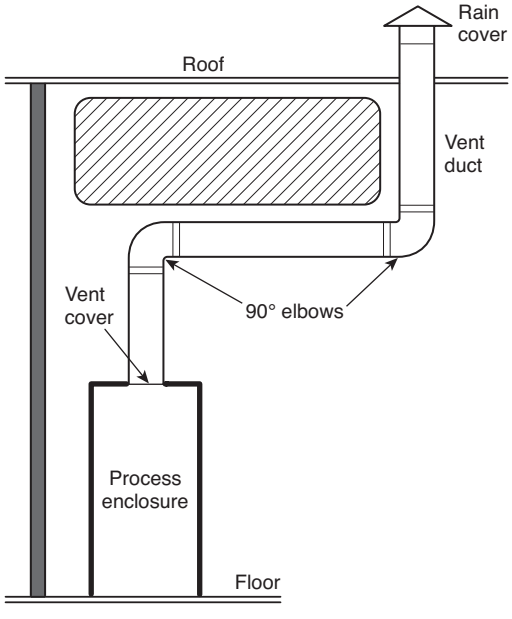

FIGURE A.8.5(f) Example Vent Duct Installation.

While Section 8.5 provides the equations in a form to calculate the vent area based on an allowable P_{red}, this example shows how to determine the resulting P_{red} for a given vent area. In general, such calculations will be iterative. These input parameters are provided for demonstration purposes. Ural [114] can be referenced for additional discussion on how they were selected.

Solution:

(1) Compute the friction factor for the problem. For practically all vent ducts, the Reynolds number is so large that a fully turbulent flow regime will be applicable. In this regime, the friction factor is only a function of the ratio of

Copyright 2014 National Fire Protection Association (NFPA). Licensed, by agreement, for individual use and download on October 4, 2014 to LEADER and READER for designated user PATTARAPORN SRITRAKOOL. No other reproduction or transmission in any form permitted without written permission of NFPA. For inquires or to report unauthorized use, contact licensing@nfpa.org.

the internal duct surface effective roughness (ε) to duct diameter. The duct friction factor can thus be calculated using a simplified form of the Colebrook equation:

$$f_D = \left\{ \frac{1}{\left[1.14 - 2\log_{10}\left(\frac{\varepsilon}{D_h} \right) \right]} \right\}^2 \quad \textbf{(A.8.5a)}$$

The effective roughness for smooth pipes and clean steel pipes is typically 0.0015 mm and 0.046 mm, respectively. Recognizing that the pipes used repeatedly in combustion events could be corroded, a value of ε = 0.26 mm is assumed.

From Equation A.8.5a, $f_D = 0.013$:

$$\text{then } \frac{f_D \cdot L}{D_h} = \frac{0.013 \cdot 12}{1.5} = 0.107, \text{ and} \quad \textbf{(A.8.5b)}$$
$$K = K_{inlet} + \frac{f_D \cdot L}{D_h} + K_{elbows} + K_{outlet}$$
$$K = 1.5 + 0.107 + 2.4 + 0.75 = 4.757$$

where:
K = 4.757
K_{inlet} = 1.5
K_{elbows} = 2.4
K_{exit} = 0.75

(2) Assume a P_{red} value of 1 bar-g. The solution is iterative, where the assumed value of P_{red} is replaced with the calculated value of P_{red} until the two values substantially match. A 1 percent difference between iterations is typically considered acceptable convergence.

(3) From Equation 8.2.2:

$$A_{v0} = 1 \cdot 10^{-4} \cdot \left[1 + 1.54 \cdot (0.25)^{4/3} \right] \cdot 200 \cdot (25)^{3/4} \cdot \sqrt{\frac{8}{P_{red}} - 1} \quad \textbf{(A.8.5c)}$$
$$A_{v0} = \mathbf{0.735}\ \text{m}^2$$

(4) From Equation 8.2.3:

$$A_{v1} = 0.735 \cdot \left[1 + 0.6 \cdot (4-2)^{0.75} \cdot \exp(-0.95 \cdot P_{red}^2) \right] \quad \textbf{(A.8.5d)}$$
$$A_{v1} = \mathbf{1.02}\ \text{m}^2$$

(5) From Equation 8.5.1(b), and using the intended vent area of 1.77 m^2:

$$E_1 = \frac{1.77 \cdot 12}{25} \quad \textbf{(A.8.5e)}$$
$$E_1 = 0.85$$

(6) From Equation 8.5.1(c), and using the installed vent area of 1.77 m^2:

$$E_2 = \frac{10^4 \cdot 1.77}{\left[1 + 1.54 \cdot (0.25)^{4/3} \right] \cdot 200 \cdot (25)^{3/4}} \quad \textbf{(A.8.5f)}$$
$$E_2 = 6.37$$

(7) From Equation 8.5.1(a), with A_{v4} equal to A_{v1}, assuming no increase for turbulence, inertia, or partial volume:

$$A_{vf} = (1.02) \cdot \left[1 + 1.18 \cdot (0.85)^{0.8} \cdot (6.37)^{0.4} \right] \cdot \sqrt{\frac{4.757}{1.5}} \quad \textbf{(A.8.5g)}$$
$$\mathbf{A_{vf}} = 5.77\ \text{m}^2$$

(8) Because the calculated value of A_{vf} is not equal to the installed vent area, go back to Step 2, and change P_{red} until the A_{vf} calculated in Step 7 is equal to the specified vent area of 1.77 m^2. A trial-and-error process (or the goal seek button in Excel) satisfies the requirement in Step 8 when P_{red} = 3.52 bar-g.

(9) From 8.5.9, Equation A.8.5h and Equation A.8.5i show that there is no deflagration-to-detonation-transition (DDT) propensity for this particular application:

$$L_{eff} \le \min\left[\frac{10{,}000 \cdot 1.5}{200},\ \frac{11{,}000}{200} \right] \quad \textbf{(A.8.5h)}$$
$$L_{eff} \le \min\ [75,\ 55]$$
$$\le 55$$

$$L_{dusty} = (8 - 3.52) \cdot \frac{25}{1.77} \quad \textbf{(A.8.5i)}$$
$$= 63\ \text{m}$$

Because L_{duct} = 12 m, L_{eff} = min [12, 63] = 12 m ≤ 55 m. Therefore, DDT is not expected.

A.8.5.1 This solution of Equation 8.5.1a is iterative, because E_1 and E_2 are both functions of A_{vf}.

A.8.6.1.1 For deflagration venting accomplished by means of vent closures located in the sidewall of the enclosure, the closures should be distributed around the wall near the top.

A.8.6.3 In such cases, design and operating conditions (internal and external pressure, wind loads, and snow loads) can cause the mass of the roof to exceed that prescribed for deflagration vent closure.

A.8.7.1 A key assumption made for the three alternatives in 8.7.1 is that the clean air plenum above the tube sheet is essentially free of dust accumulations.

A.8.7.1(1) One way to provide a clear path is to separate the vent closure from the filter elements. Figure A.8.7.1(1)(a) shows the vent closure below the filter elements for standard vertical bags, while Figure A.8.7.1(1)(b) shows the vent closure equivalently separated for horizontal cartridges by the vent area being located under the cartridges (Version 1) or to the side (Version 2). The figures provided here are representative of current practices.

A.8.7.1(2) Another approach to provide a clear path is to provide a flow area equivalent to the vent area immediately adjacent to the vent. Figure A.8.7.1(2)(a) and Figure A.8.7.1(2)(b) show a side view and a plan view, respectively, for vertical elements. Figure A.8.7.1(2)(c) and Figure A.8.7.1(2)(d) show an end view and a side view, respectively, for Version 1 of the horizontal elements, while Figure A.8.7.1(2)(e) shows an end view for Version 2 of the horizontal elements.

Copyright 2014 National Fire Protection Association (NFPA). Licensed, by agreement, for individual use and download on October 4, 2014 to LEADER and READER for designated user PATTARAPORN SRITRAKOOL. No other reproduction or transmission in any form permitted without written permission of NFPA. For inquires or to report unauthorized use, contact licensing@nfpa.org.

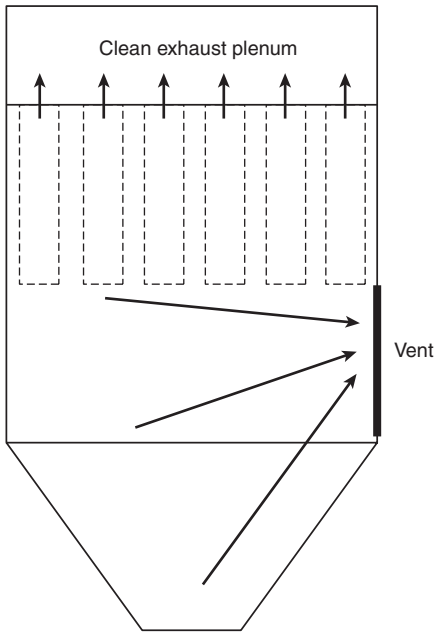

FIGURE A.8.7.1(1)(a) Vent Area Separated from Vertical Filter Elements.

A.8.7.3 Figure A.8.7.3, in comparison to Figure A.8.7.1(1)(a) and Figure A.8.7.1(2)(a), shows a situation for vertical elements in which neither separation nor a clear path is provided. A similar situation can exist for horizontal elements.

A.8.8.1 A single-casing design has buckets moving both upward and downward within the same casing. A double casing design has one casing enclosing the buckets as they move upward and another casing enclosing the buckets as they move downward.

A.8.8.2 The boot of a bucket elevator is the inlet section at the lower elevation, while the head is the outlet section at the higher elevation.

A.8.8.3.3 Changing from metal to plastic buckets has been demonstrated to increase the explosion pressures. When plastic buckets are used, it is recommended that the corresponding elevator design P_{red} of 0.5 or 1.0 bar be increased by the factors given in Table A.8.8.3.3.

A.8.8.3.4 The vent area can be located on the bucket face, the sides, or both as suitable for the installation.

A.8.8.4 P_{stat} should be as low as possible.

A.8.9 When dust deflagrations occur, there can be far more dust present than there is oxidant to burn it completely. When venting takes place, large amounts of unburned dust are vented from the enclosure, and burning continues as the dust mixes with additional air from the surrounding atmosphere. Consequently, a very large and long fireball of burning dust develops that can extend downward as well as upward. The average surface emissive power varies greatly between different types of dusts, with metal dusts tending to be much worse than, for example, agricultural dusts [113]. *(See also A.7.7.)*

A.8.9.2 If the vented material exits from the vent horizontally, the horizontal length of the fireball is anticipated. It is extremely important to note that the fireball can, in fact, extend downward as well as upward [91, 108]. In some deflagrations, buoyancy effects can allow the fireball to rise to elevations well above the distances specified.

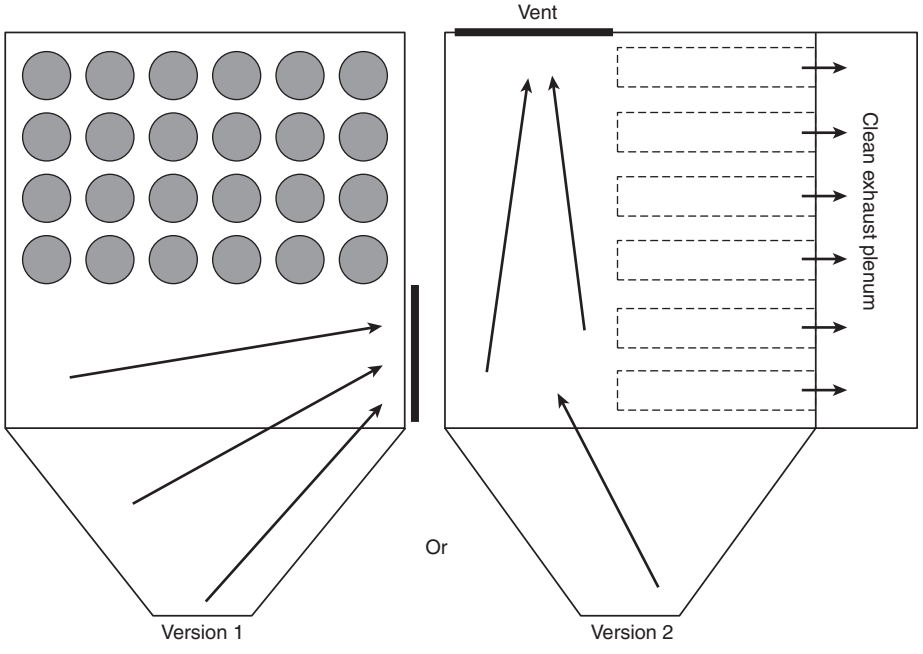

FIGURE A.8.7.1(1)(b) Vent Area Separated from Horizontal Filter Elements.

Copyright 2014 National Fire Protection Association (NFPA). Licensed, by agreement, for individual use and download on October 4, 2014 to LEADER and READER for designated user PATTARAPORN SRITRAKOOL. No other reproduction or transmission in any form permitted without written permission of NFPA. For inquires or to report unauthorized use, contact licensing@nfpa.org.

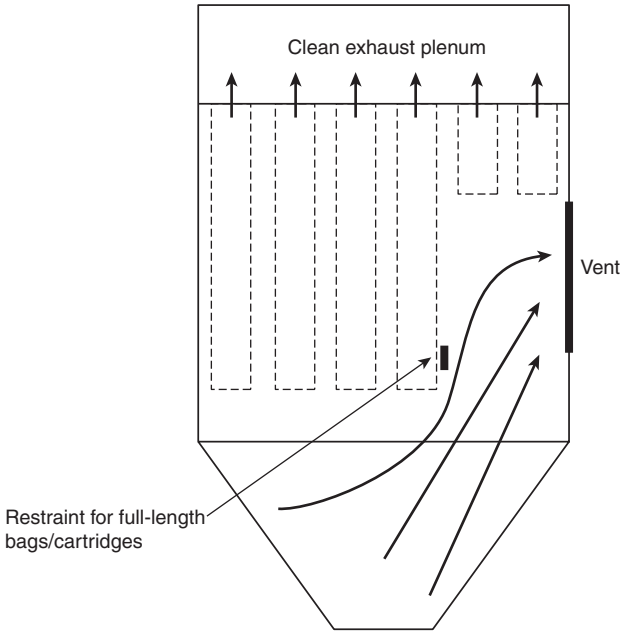

FIGURE A.8.7.1(2)(a) Free Area Normal to Vent for Vertical Filter Elements — Side View.

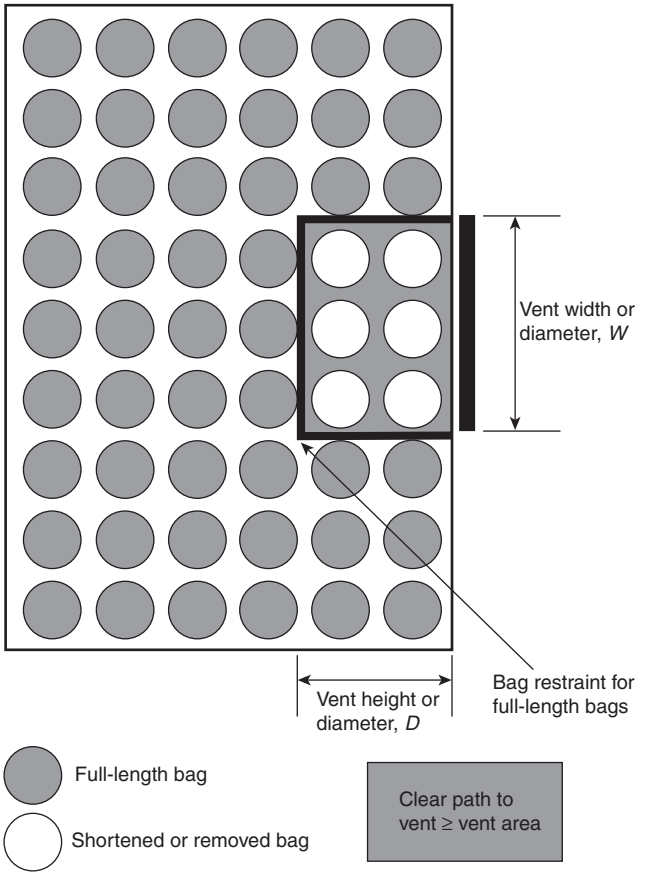

FIGURE A.8.7.1(2)(b) Free Area Normal to Vent for Vertical Filter Elements — Plan View.

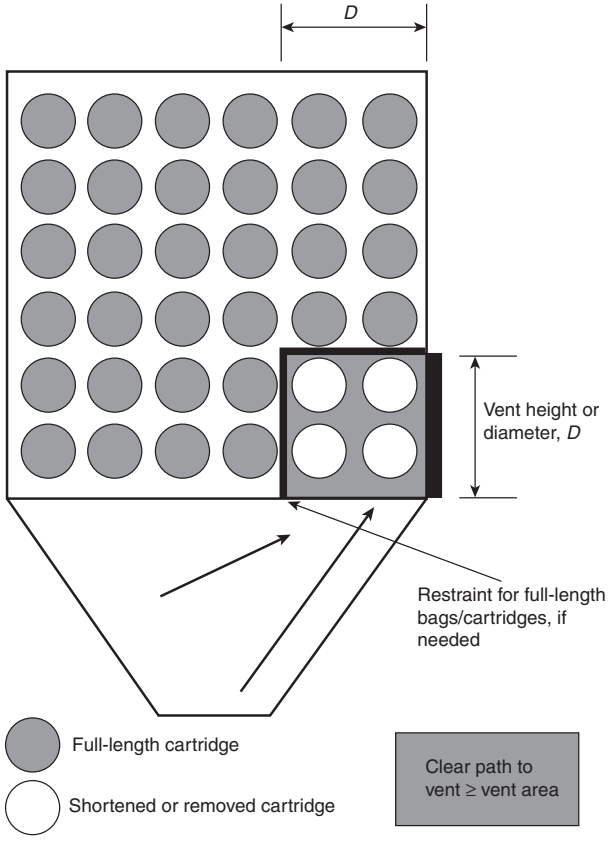

FIGURE A.8.7.1(2)(c) Free Area Normal to Vent for Horizontal Elements — Version 1, End View.

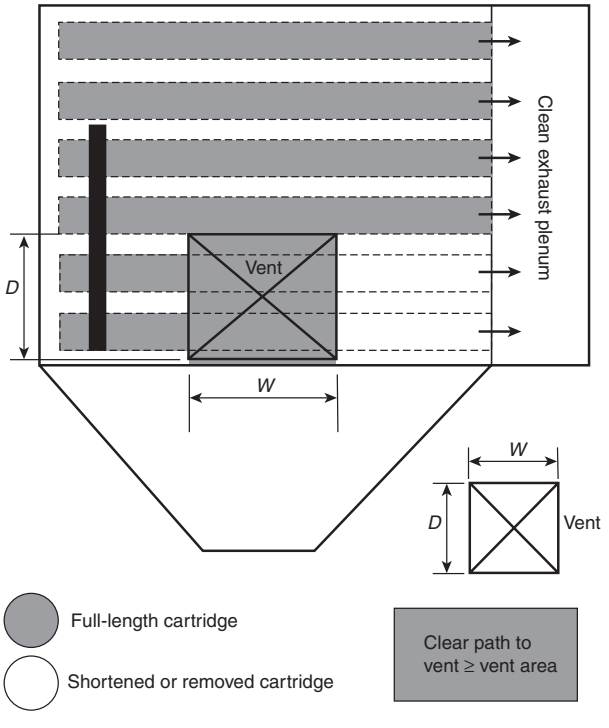

FIGURE A.8.7.1(2)(d) Free Area Normal to Vent for Horizontal Filter Elements — Version 1, Side View.

Copyright 2014 National Fire Protection Association (NFPA). Licensed, by agreement, for individual use and download on October 4, 2014 to LEADER and READER for designated user PATTARAPORN SRITRAKOOL. No other reproduction or transmission in any form permitted without written permission of NFPA. For inquires or to report unauthorized use, contact licensing@nfpa.org.

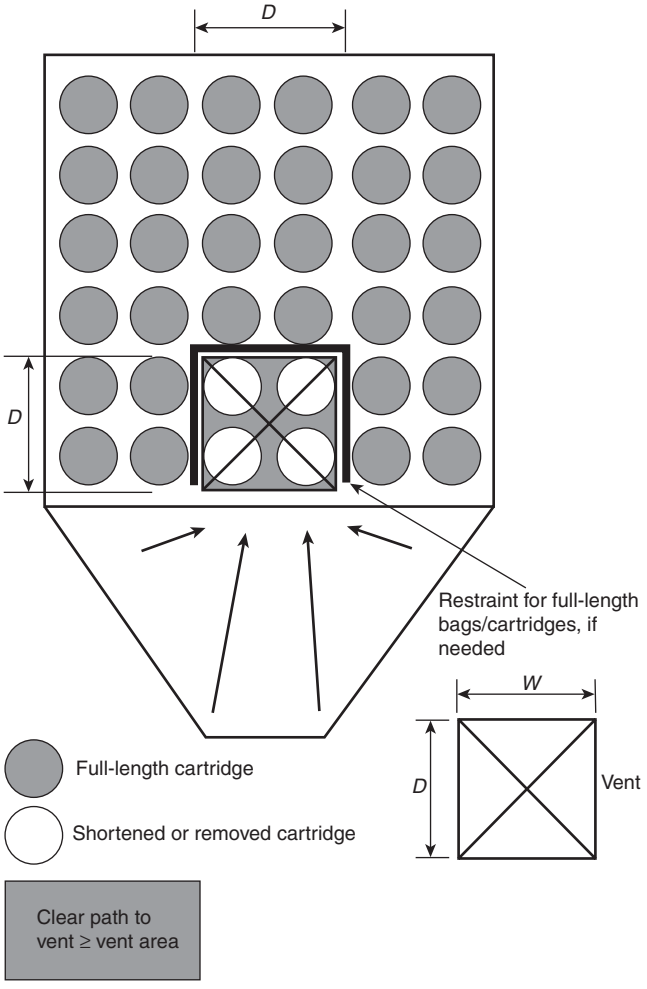

FIGURE A.8.7.1(2)(e) Free Area Normal to Vent for Horizontal Filter Elements — Version 2, End View.

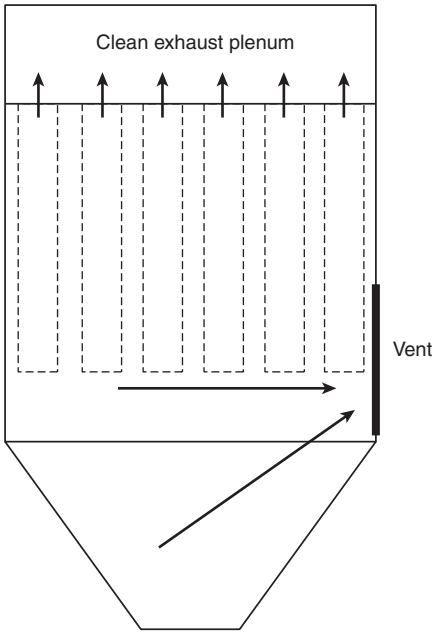

FIGURE A.8.7.3 Insufficient Separation for Vertical Filter Elements.

Table A.8.8.3.3 Enclosure Strength Adjustment for Plastic Buckets

K_{St} (bar-m/s)	Percent Increase
<100	20%
100–150	35%
151–200	50%

Source: [121].

A.8.9.3 Estimates of external pressure effects for gas venting have been made using validated computational fluid dynamics models. A simpler methodology to estimate downstream external pressures for other situations and other locations is described in T. Forcier and R. Zalosh [116].

A.8.10 Even with complete extinguishment of flame, the immediate area surrounding the vent can experience overpressure and radiant energy. Venting indoors has an effect on the building that houses the protected equipment due to increased pressurization of the surrounding volume [110].

A.8.11 A bin vent is an air material separator attached to a larger storage vessel but not provided with a physical separation between the two. The collected dust is returned directly to the large storage vessel.

A.8.12 Interconnections between separate pieces of equipment present a special hazard. A typical case is two enclosures connected by a pipe. Ignition in one enclosure causes two effects in the second enclosure. Pressure development in the first enclosure forces gas through the connecting pipe into the second enclosure, resulting in an increase in both pressure and turbulence. The flame front is also forced through the pipe into the second enclosure, where it becomes a large ignition source. The overall effect depends on the relative sizes of the enclosures and the pipe, as well as on the length of the pipe. This phenomenon has been investigated by Bartknecht, who discovered that the effects can be significant. Pressures that develop in the pipeline itself can also be high, especially if a deflagration changes to a detonation. Where such interconnections are necessary, deflagration isolation devices should be considered, or the interconnections should be vented. Without successful isolation or venting of the interconnection, vent areas calculated based on the design described herein can be inadequate because of the creation of high rates of pressure rise [58, 66].

Equation 8.2.2 and Equation 8.2.3 can give insufficient vent area if a dust deflagration propagates from one vessel to another through a pipeline [98]. Increased turbulence, pressure piling, and broad-flame jet ignition result in increased deflagration violence. Such increased deflagration violence results in an elevated deflagration pressure that is higher than that used to calculate vent area in Equation 8.2.2 and Equation 8.2.3.

A.8.12.1 Interconnecting pipelines with inside diameters greater than 0.3 m (1 ft) or longer than 6 m (20 ft) are not covered in this standard. Alternative protection measures can

Copyright 2014 National Fire Protection Association (NFPA). Licensed, by agreement, for individual use and download on October 4, 2014 to LEADER and READER for designated user PATTARAPORN SRITRAKOOL. No other reproduction or transmission in any form permitted without written permission of NFPA. For inquires or to report unauthorized use, contact licensing@nfpa.org.

be found in Chapter 9 of this document and in NFPA 69, *Standard on Explosion Prevention Systems.*

A.8.12.2 The subject of enhanced explosions in interconnected enclosures is addressed in the following references:

(1) Lunn, Holbrow, Andrews, and Gummer, "Dust Explosions in Totally Closed Interconnected Vessels"
(2) Holbrow, Lunn, and Tyldesley, "Dust explosion protection in linked vessels: Guidance for containment and venting"
(3) Holbrow, Andrews, and Lunn, "Dust explosions in interconnected vented vessels"
(4) Roser, "Investigation of dust explosion phenomenon in interconnected process vessels"
(5) Roser, Vogel, Radant, Malalasekera, and Parkin, "Investigations of flame front propagation between interconnected process vessels. Development of a new flame front propagation time prediction model"
(6) Moore and Senecal, "Industrial Explosion Protection — How Safe Is Your Process?" http:www.nfpa.org/assets/files/PDF/Foundation%20proceedings/Industrial_Explosion_Protection.pdf

A.9.1 Relatively little systematic test work is published on the design of deflagration venting for pipes and ducts. The guidelines in this chapter are based on information contained in Bartknecht [3, 68–76, 105, 106].

The use of deflagration venting on pipes or ducts cannot be relied on to stop flame front propagation in the pipe. Venting only provides relief of the pressures generated during a deflagration.

Several factors make the problems associated with the design of deflagration vents for pipes and ducts different from those associated with the design of deflagration vents for ordinary vessels and enclosures. Such problems include the following:

(1) Deflagrations in pipes and ducts with large length-to-diameter (*L/D*) ratios can transition to detonations. Flame speed acceleration increases, and higher pressures are generated as *L/D* increases.
(2) Pipes and ducts frequently contain devices, such as valves, elbows, and fittings, or obstacles. Such devices cause turbulence and flame stretching that promote flame acceleration and increase pressure.
(3) Deflagrations that originate in a vessel precompress the combustible material in the pipe or duct and provide a strong flame front ignition of the combustible material in the pipe or duct. Both of these factors increase the severity of the deflagration and the possibility that a detonation will occur.

Wherever it is not possible to provide vents as recommended in this chapter, two alternative approaches can be employed as follows:

(1) Explosion prevention measures should be provided as described in NFPA 69, *Standard on Explosion Prevention Systems.*
(2) Piping or ducts should be designed to withstand detonation pressures and provide isolation devices to protect interconnected vessels. Systems that have a design pressure of 10 bar are acceptable for St-1 dusts.

A.9.2 *Example.* Deflagration vents should be provided for the ducts in the system shown in Figure A.9.2. The gas flow through the system is 100 m^3/min (3500 ft^3/min), and all ducts are 0.6 m (2 ft) in diameter. The maximum allowable working pressure for the ducts and equipment is 0.2 bar (3 psi), and the maximum operating pressure in the system is 0.05 bar (0.73 psi). The system handles an St-2 dust. It is further assumed that the dryer and the dust collector are equipped with adequate deflagration vents.

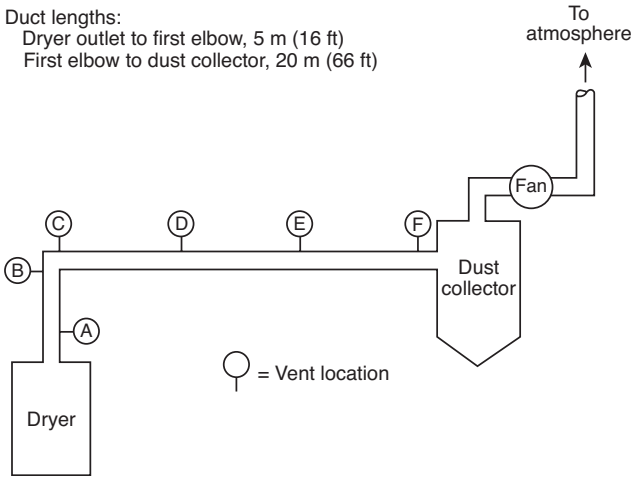

FIGURE A.9.2 Diagram for A.9.2 Example.

As recommended by 9.2.4, *A* should be located within two vent diameters of the dryer outlet and no more than three vent diameters upstream of the first elbow. *B* and *C* should be located three diameters distance upstream and downstream of the first elbow, as recommended in 9.2.5. *F* should be located at a position approximately two diameters upstream of the dust collector inlet, based on 9.2.4.

Additional venting is needed for the 20 m (66 ft) section. The flow of 100 m^3/min corresponds to a velocity of 6 m/s (20 ft/s). Therefore, Figure 9.3.1 should be used. According to Figure 9.3.1, the vents should be placed at intervals no greater than 11 vent diameters, or approximately 6.5 m (21 ft), apart. The distance between vents *C* and *F* is 17.2 m (56 ft); therefore, two additional vents (*D* and *E*) at approximately equal spacing meet the need.

The total vent area at each vent location should be at least equal to the cross-sectional area of the duct. This results in a value of 0.2 bar (3 psi) for P_{red}. The vent release pressure should not exceed half P_{red} and, therefore, cannot exceed 0.1 bar (1.5 psi).

A.9.2.4 See Example in A.9.2.

A.9.2.9.2 The following problem illustrates the requirement in 9.2.9.2. A flare stack is 0.4 m (1.3 ft) in diameter by 40 m (130 ft) in height and is equipped with a water seal at its base. What should its design pressure be in order to protect it from the pressure developed by ignition of a fuel-air mixture that has properties similar to those of propane?

Check the maximum allowable length. From Figure 9.2.10.1, a maximum *L/D* of 28 is allowed. This stack has an *L/D* equal to 100. Therefore, it should be designed to withstand a detonation or should be protected by some other means.

The distance necessary for a deflagration to transition into a detonation is described as a length-to-diameter ratio (*L/D* for detonation). The *L/D* is dependent on ignition source strength, combustible material, piping system geometry, roughness of pipe walls, and initial conditions within the pipe.

A.9.2.10.1 The curve identified as "Dusts with $K_{St} \leq 200$" in Figure 9.2.10.1 is based on Bjorklund and Ryason [75] for gasoline vapor deflagrations. The curve identified as "Propane, dusts with

Copyright 2014 National Fire Protection Association (NFPA). Licensed, by agreement, for individual use and download on October 4, 2014 to LEADER and READER for designated user PATTARAPORN SRITRAKOOL. No other reproduction or transmission in any form permitted without written permission of NFPA. For inquires or to report unauthorized use, contact licensing@nfpa.org.

K_{St} > 200" in Figure 9.2.10.1 is obtained by reducing $(L/D)_{max}$ data for gasoline vapor by 50 percent [75]. Therefore, the Committee has exercised engineering judgment in adapting the data for use with dusts as well as gases.

If the length of a pipe or duct is greater than the *L/D* indicated in Figure 9.2.10.1, a single vent cannot provide enough vent area *(see Section 9.3)*. Figure 9.2.10.1 includes safety factors for typical long-radius elbow systems. While very few conveying pipes are either straight or smooth, Figure 9.2.10.1 can be used for most applications. It does not apply where conveying pipes have sharp elbows or orifice plates along their lengths.

A.9.2.10.2.2.1 The following problem illustrates the requirement in 9.2.10.2.2.1. A dryer that handles a dust whose K_{St} is 190 is 2 m (6.6 ft) in diameter and 20 m (65.6 ft) long and is designed with a single vent. What is the pressure that can occur during a vented explosion?

(1) *Maximum Allowable Length.* According to Figure 9.2.10.1, an *L/D* of approximately 25 is allowable. The dryer has an *L/D* of 10, so this is acceptable.
(2) *Maximum Pressure.* According to Figure 9.2.10.2.2.1, a pressure of approximately 0.5 bar (7.3 psi) develops in such dryer equipment by means of the deflagration of the specified dust. Therefore, the equipment should have a design pressure of at least this value.

A.9.3.1 The following problem illustrates the requirement in 9.3.1. A straight duct that is 1 m (3.3 ft) in diameter and 100 m (330 ft) long is to be protected by deflagration vents. It contains a hydrocarbon-air mixture that has properties similar to those of propane. The vent spacing needed to limit the deflagration pressure to 0.17 bar (2.5 psi), where the vents are designed to open at 0.05 bar (0.73 psi), must be determined. Figure 9.3.1 specifies that the vents should be placed no more than 7.6 m (25 ft) apart. To meet this requirement, a vent should be placed at each end, and 13 additional vents should be evenly spaced along the duct.

A.10.1 Openings fitted with fixed louvers can be considered as open vents. However, the construction of the louvers partially obstructs the opening, thus reducing the net free vent area. The obstruction presented by the louvers decreases the flow rate of gases that pass through the vent and increases the pressure drop across the vent.

A.10.3.2 Specially designed fasteners that fail, under low mechanical stress, to release a vent closure are commercially available, and some have been tested by listing or approval agencies.

A.10.3.2.2 Large panel closures that are installed on buildings or other large low-strength enclosures cannot be tested as a complete assembly.

A.10.4 Where the vent closure panel is a double-wall type (such as an insulated sandwich panel), single-wall metal vent panel restraint systems should not be used. The restraint system shown in Figure A.10.4(a) should be used for double-wall panels. The panel area should be limited to 3.1 m^2 (33 ft^2), and its mass should be limited to 12.2 kg/m^2 (2.5 lb/ft^2). Forged eyebolts should be used. Alternatively, a "U" bolt can be substituted for the forged eyebolt. A shock absorber device with a fail-safe tether should be provided.

The bar washer on the exterior of the panel should be oriented horizontally, should span the panel width (less 2 in. and any panel overlap), and should be attached to the panel with as many bolts as practical (i.e., at every panel flat for a corrugated panel). High-quality wire rope clips should be used to ensure the restraint system functions properly. It is noted that this panel restraint system was developed based on tests in which the peak enclosure pressure achieved was approximately 1 psig or less; hence, its performance at higher explosion pressures might not be reliable.

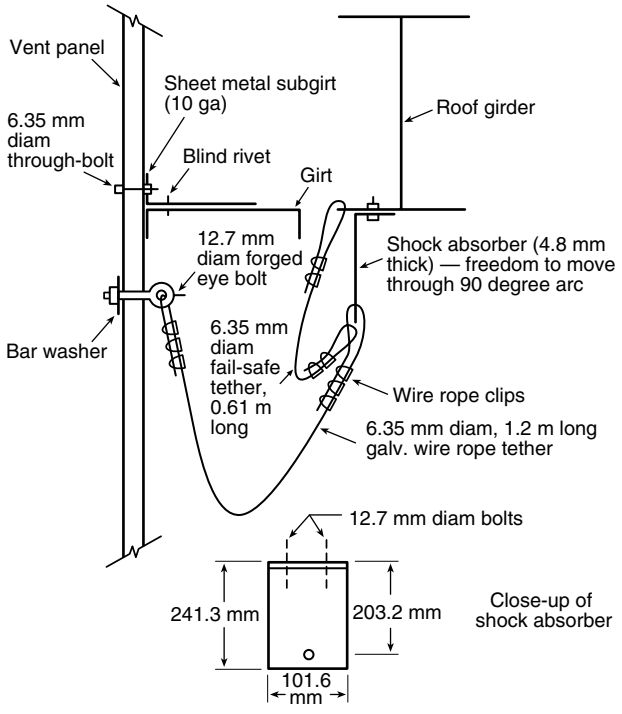

FIGURE A.10.4(a) An Example of a Restraint System for Double-Wall Insulated Metal Vent Panels.

Where large, lightweight panels are used as vent closures, it is usually necessary to restrain the vent closures so that they do not become projectile hazards. The restraining method shown in Figure A.10.4(b) illustrates one method that is particularly suited for conventional single-wall metal panels. The key feature of the system includes a 50 mm (2 in.) wide, 10 gauge bar washer. The

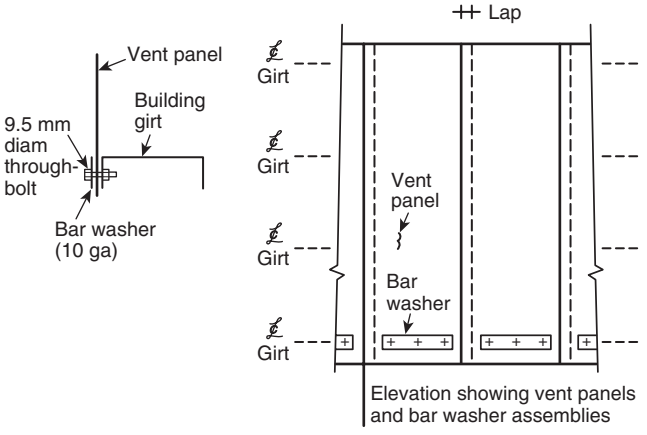

FIGURE A.10.4(b) An Example of a Restraint System for Single-Wall Metal Vent Panels.

Copyright 2014 National Fire Protection Association (NFPA). Licensed, by agreement, for individual use and download on October 4, 2014 to LEADER and READER for designated user PATTARAPORN SRITRAKOOL. No other reproduction or transmission in any form permitted without written permission of NFPA. For inquires or to report unauthorized use, contact licensing@nfpa.org.

length of the bar is equal to the panel width, less 50 mm (2 in.) and less any overlap between panels. The bar washer–vent panel assembly is secured to the building structural frame using at least three 10 mm (⅜ in.) diameter through-bolts.

The restraining techniques shown are specific to their application and are intended only as examples. Each situation necessitates individual design. Any vent restraint design should be documented by the designer. No restraint for any vent closure should result in restricting the vent area. It is possible for a closure tether to become twisted and to then bind the vent to less than the full opening area of the vent.

The stiffness of the double-wall panel is much greater than that of a single-wall panel. The formation of the plastic hinge occurs more slowly, and the rotation of the panel can be incomplete. Both factors tend to delay or impede venting during a deflagration.

The component sizes indicated in Figure A.10.4(a) have been successfully tested for areas up to 3.1 m^2 (33 ft^2) and for mass of up to 12.2 kg/m^2 (2.5 lb/ft^2). Tests employing fewer than three rope clips have, in some instances, resulted in slippage of the tether through the rope clips, thus allowing the panel to become a free projectile.

The shock absorber is a thick, L-shaped piece of steel plate to which the tether is attached. During venting, the shock absorber forms a plastic hinge at the juncture in the "L," as the outstanding leg of the "L" rotates in an effort to follow the movement of the panel away from the structure. The rotation of the leg provides additional distance and time, over which the panel is decelerated while simultaneously dissipating some of the panel's kinetic energy.

A.10.5.1 Closures that are held shut with spring-loaded, magnetic, or friction latches are most frequently used for this form of protection.

A.10.5.1.1 It is important that hinges on hinged vent closures be capable of resisting the expected forces. If hinges are weak, if they are attached weakly, or if the door frame is weak, the vent closures can tear away in the course of venting a deflagration and become projectile hazards.

A.10.5.1.2 It is difficult to vent equipment of this type if the shell, drum, or enclosure revolves, turns, or vibrates.

A.10.5.1.6 If construction is strong, the vent closure can close rapidly after venting. This can result in a partial vacuum in the enclosure, which in turn can result in inward deformation of the enclosure.

Figure 10.5.1.6 shows the vacuum relief vent area, as a function of enclosure size, that is used to prevent the vacuum from exceeding the vacuum resistance of the enclosure, in millibars.

A.10.5.2 Rupture diaphragms can be designed in round, square, rectangular, or other shapes to effectively provide vent relief area to fit the available mounting space. *(See Figure A.10.5.2.)*

Some materials that are used as rupture diaphragms can balloon, tear away from the mounting frame, or otherwise open randomly, leaving the vent opening partially blocked on initial rupture. Although such restrictions can be momentary, delays of only a few milliseconds in relieving deflagrations of dusts or gases that have high rates of pressure rise can cause extensive damage to equipment.

A.11.2 A sample vent closure information form is shown in Figure A.11.2.

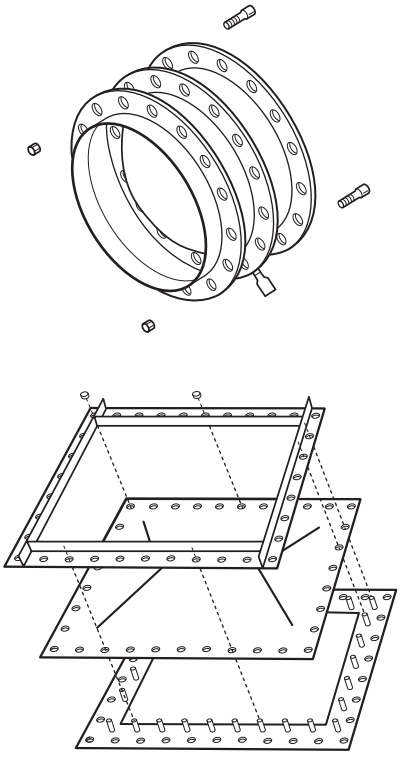

FIGURE A.10.5.2 Typical Rupture Diaphragm.

A.11.3.4 For symbols, placement, and layout, refer to ANSI Z535, *Product Safety Signs and Labels.*

A.11.4 A sample annual inspection form is shown in Figure A.11.4.

A.11.4.2 The frequency depends on the environmental and service conditions to which the devices are to be exposed. Process or occupancy changes that can introduce significant changes in condition, such as changes in the severity of corrosive conditions or increases in the accumulation of deposits or debris, can necessitate more frequent inspection. It is recommended that an inspection be conducted after a process maintenance turnaround. Inspections should also be conducted following any natural event that can adversely affect the operation and the relief path of a vent closure (e.g., hurricanes or snow and ice accumulations).

A.11.6 The vent closure design parameters can include the following items, among others:

(1) Manufacturer
(2) Model number
(3) Identification number
(4) Location
(5) Size
(6) Type
(7) Opening pressure
(8) Panel weight
(9) Material(s)

A.11.9.2 It is recommended that changes be reviewed with life safety system and equipment suppliers.

Copyright 2014 National Fire Protection Association (NFPA). Licensed, by agreement, for individual use and download on October 4, 2014 to LEADER and READER for designated user PATTARAPORN SRITRAKOOL. No other reproduction or transmission in any form permitted without written permission of NFPA. For inquires or to report unauthorized use, contact licensing@nfpa.org.

VENT CLOSURE INFORMATION FORM

Date: _____

CONTACT INFORMATION

Company name: _____ Responsible person: _____

Address: _____ Title: _____

City: _____ State: _____ Zip code: _____ Telephone: _____

Telephone: _____ Report writer: _____

Equipment/process protected: _____

Vent ID number: _____ Vent location: _____

Vent size: _____ Vent manufacturer: _____

Vent type: _____ Vent model number: _____

Vent opening pressure: _____ Vent construction material: _____

Vent panel ID: _____

HAZARD DETAILS

Name of material: _____

Hazard category: ❑ Dust ❑ Gas ❑ Mist ❑ Vapor ❑ Hybrid

K_{St} or K_G value of material: _____ bar-m/sec

P_{max} value of material: _____ ❑ bar-g ❑ or psig

VENT DEVICE DETAILS

Mounting frame: ❑ Yes ❑ No

Frame type: ❑ Welded ❑ Bolted

Thermal insulation: ❑ Yes ❑ No

Gasket material: _____

Sanitary sealing: ❑ Yes ❑ No

Vent restraints: ❑ Yes ❑ No

PROTECTED ENCLOSURE DETAILS *Rectangular Bag House (for example)*

Enclosure location: _____

Normal operating pressure: ❑ _____ bar-g ❑ _____ psig @ _____

Normal operating temperature: ❑ _____ °C ❑ _____ °F

Maximum operating pressure: ❑ _____ bar-g ❑ _____ psig @ _____

Maximum operating temperature: ❑ _____ °C ❑ _____ °F

Maximum vacuum conditions: ❑ _____ bar-g ❑ _____ psig ❑ _____ in. W.C.

© 2013 National Fire Protection Association NFPA 68 (p. 1 of 2)

FIGURE A.11.2 Sample Vent Closure Information Form.

Copyright 2014 National Fire Protection Association (NFPA). Licensed, by agreement, for individual use and download on October 4, 2014 to LEADER and READER for designated user PATTARAPORN SRITRAKOOL. No other reproduction or transmission in any form permitted without written permission of NFPA. For inquires or to report unauthorized use, contact licensing@nfpa.org.

VENT CLOSURE INFORMATION FORM *(continued)*

Frequency and magnitude of pressure cycles: _____

Vessel volume and dimensions: _____

Vessel aspect ratio: _____

Vessel strength: _____

Design calculations: NFPA 68 Chapter _____

Other information (to be collected and attached):

- ❑ Data sheets
- ❑ Manufacturer's instruction, installation, and maintenance manuals
- ❑ Vent closure details
- ❑ Vent frame
- ❑ MSDS (of process material)
- ❑ Material K_{St}/K_G test report (the value used for the vent design)
- ❑ Copy of vent identification label
- ❑ Process risk assessment report
- ❑ Process plan view showing vent relief path
- ❑ Process elevation view showing vent relief path
- ❑ Proximity of personnel to vent relief path
- ❑ Management of change requirements
- ❑ Mechanical installation details
- ❑ Manufacturer's service and maintenance forms
- ❑ Verification of conformity documentation
- ❑ Vent restraint documentation
- ❑ Process interlocks (details)

© 2013 National Fire Protection Association NFPA 68 (p. 2 of 2)

FIGURE A.11.2 ***Continued***

Copyright 2014 National Fire Protection Association (NFPA). Licensed, by agreement, for individual use and download on October 4, 2014 to LEADER and READER for designated user PATTARAPORN SRITRAKOOL. No other reproduction or transmission in any form permitted without written permission of NFPA. For inquires or to report unauthorized use, contact licensing@nfpa.org.

ANNUAL INSPECTION FORM

USER CONTACT INFORMATION

Company name: _____ Date inspected: _____

Address: _____ Time: _____

City: _____ State: _____ Zip code: _____

Telephone: _____

Inspector's name: _____

Inspection company: _____

Address: _____

City: _____ State: _____ Zip code: _____

Telephone: _____

Vent ID#: _____

Vent location: _____

Vent manufacturer: _____

INSPECTION

Follow the manufacturer's recommendations and the following:

Is the vent:

1.	Clear of obstructions?	❑ Yes ❑ No
2.	Corroded?	❑ Yes ❑ No
3.	Mechanically or physically damaged?	❑ Yes ❑ No
4.	Clearly labeled: Warning. Explosion relief device?	❑ Yes ❑ No
5.	Clearly tagged/labeled with manufacturer's information?	❑ Yes ❑ No
6.	Protected from ice and snow?	❑ Yes ❑ No
7.	Painted or coated? (Other than by the manufacturer)	❑ Yes ❑ No
8.	Showing buildup or deposits?	❑ Yes ❑ No
9.	Bulging, damaged, or deformed (from original shape)?	❑ Yes ❑ No
10.	Changed, altered, or tampered with?	❑ Yes ❑ No
11.	Showing signs of fatigue?	❑ Yes ❑ No
12.	Provided with fasteners and mounting hardware in place?	❑ Yes ❑ No
13.	Frame damaged or deformed?	❑ Yes ❑ No
14.	Released?	❑ Yes ❑ No
15.	Opening sensor operable and wiring up to current codes?	❑ Yes ❑ No
16.	Provided with seals, tamper, or other opening indicators intact?	❑ Yes ❑ No
17.	Provided with restraints in place and attached?	❑ Yes ❑ No
18.	Provided with hinges lubricated and operating freely?	❑ Yes ❑ No
19.	Clean and free of contamination?	❑ Yes ❑ No

© 2013 National Fire Protection Association NFPA 68 (p. 1 of 2)

FIGURE A.11.4 Sample Annual Inspection Form.

Copyright 2014 National Fire Protection Association (NFPA). Licensed, by agreement, for individual use and download on October 4, 2014 to LEADER and READER for designated user PATTARAPORN SRITRAKOOL. No other reproduction or transmission in any form permitted without written permission of NFPA. For inquires or to report unauthorized use, contact licensing@nfpa.org.

ANNUAL INSPECTION FORM *(continued)*

Looking from the vent outward, can you see personnel working or hazardous material being stored in your direct line of sight? ❑ Yes ❑ No

If yes, describe:

_____

_____

_____

Abnormal conditions found:

_____

_____

_____

Abnormal conditions corrected at time of inspection:

_____

_____

_____

Abnormal conditions that still need attention/addressed:

_____

_____

_____

Action required by management:

_____

_____

_____

Process engineer/supervisor notified? ❑ Yes ❑ No

Date addressed: _____

Action required? ❑ Yes ❑ No

Signature: _____

Have you observed changes to the process and/or its surroundings that should invoke the company's management of change procedure? ❑ Yes ❑ No

Inspector's signature: _____

Manager's signature: _____ Date: _____

© 2013 National Fire Protection Association NFPA 68 (p. 2 of 2)

FIGURE A.11.4 ***Continued***

Copyright 2014 National Fire Protection Association (NFPA). Licensed, by agreement, for individual use and download on October 4, 2014 to LEADER and READER for designated user PATTARAPORN SRITRAKOOL. No other reproduction or transmission in any form permitted without written permission of NFPA. For inquires or to report unauthorized use, contact licensing@nfpa.org.

Annex B Fundamentals of Deflagration

This annex is not a part of the requirements of this NFPA document but is included for informational purposes only.

B.1 General.

B.1.1 Deflagration Requirements. The following are necessary to initiate a deflagration:

(1) Fuel concentration within flammable limits
(2) Oxidant concentration sufficient to support combustion
(3) Presence of an ignition source

B.1.2 Deflagration Pressure.

B.1.2.1 The deflagration pressure, P, in a closed volume, V, is related to the temperature, T, and molar quantity, n, by the following ideal gas law equation:

$$P = \frac{n \cdot R \cdot T}{V} \qquad \textbf{(B.1.2.1)}$$

where:
R = universal gas constant.

B.1.2.2 The maximum deflagration pressure, P_{max}, and rate of pressure rise, dP/dt, are determined by test over a range of fuel concentrations. *(See Annex C.)* The value of P_{max} for most ordinary fuels is 6 to 10 times the absolute pressure at the time of ignition.

B.1.2.3 The value of $(dP/dt)_{max}$ is the maximum for a particular fuel concentration, referred to as the *optimum concentration*. *(See examples in Figure B.1.2.3.)*

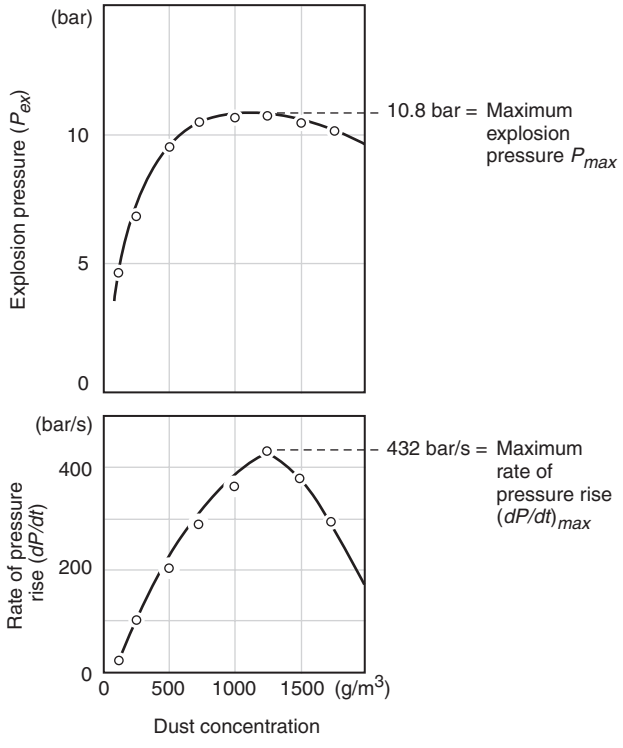

FIGURE B.1.2.3 Variation of Deflagration Pressure and Deflagration Index with Concentration for Several Dusts. (Adapted from Bartknecht [51])

B.1.2.4 Based on the K_{St} values, dusts have been categorized into three hazard classes: St-1, St-2, and St-3. These classes indicate the relative explosibility hazard and deflagration vent sizing requirements, as shown in Table B.1.2.4.

Table B.1.2.4 Hazard Classes of Dust Deflagrations

Hazard Class	K_{St} (bar-m/s)*	P_{max} (bar)*
St-1	≤200	10
St-2	201–300	10
St-3	>300	12

Note: See Annex F for examples of K_{st} values.
*K_{St} and P_{max} are determined in approximately spherical calibrated test vessels of at least 20 L capacity per ASTM E 1226, *Standard Test Method for Explosibility of Dust Clouds.*

B.1.2.5 Burning Velocity and Flame Speed.

B.1.2.5.1 The burning velocity is the rate of flame propagation relative to the velocity of the unburned gas that is ahead of it. The fundamental burning velocity, S_u, is the burning velocity of a laminar flame under stated conditions of composition, temperature, and pressure of the unburned gas. The values of S_u for many gases have been measured and published. *(See Annex D.)*

B.1.2.5.2 Flame speed, S_f, is the speed of a flame front relative to a fixed reference point. Its minimum value is equal to the fundamental burning velocity times an expansion factor equal to the ratio of the density of the unburned gas to the density of the burned gas.

B.2 Fuel.

B.2.1 General. Any material capable of reacting rapidly and exothermically with an oxidizing medium can be classified as a fuel. A fuel can exist in a gas, liquid, or solid state. Liquid fuels that are dispersed in air as fine mists, solid fuels that are dispersed in air as dusts, and hybrid mixtures pose similar deflagration risks as gaseous fuels.

B.2.2 Concentration. The concentration of a gaseous fuel in air is usually expressed as a volume percentage (vol %) or mole percentage (mol %). The concentrations of dispersed dusts and mists are usually expressed in units of mass per unit volume, such as grams per cubic meter (g/m^3).

B.2.3 Flammable Gas.

B.2.3.1 Flammable gases are present in air in concentrations below and above which they cannot burn. Such concentrations represent the flammable limits, which consist of the lower flammable limit, *LFL*, and the upper flammable limit, *UFL*. It is possible for ignition and flame propagation to occur between the concentration limits. Ignition of mixtures outside these concentration limits fails because insufficient energy is given off to heat the adjacent unburned gases to their ignition temperatures. Lower and upper flammable limits are determined by test and are test-method dependent. Published flammable limits for numerous fuels are available.

For further information, see NFPA 325, *Guide to Fire Hazard Properties of Flammable Liquids, Gases, and Volatile Solids.* (Note: Although NFPA 325 has been officially withdrawn from the *National Fire Codes®*, the information is still available in NFPA's *Fire Protection Guide to Hazardous Materials.*)

Copyright 2014 National Fire Protection Association (NFPA). Licensed, by agreement, for individual use and download on October 4, 2014 to LEADER and READER for designated user PATTARAPORN SRITRAKOOL. No other reproduction or transmission in any form permitted without written permission of NFPA. For inquires or to report unauthorized use, contact licensing@nfpa.org.

B.2.3.2 The mixture compositions that are observed to support the maximum pressure, P_{max}, and the maximum rate of pressure rise, $(dP/dt)_{max}$, for a deflagration are commonly on the fuel-rich side of the stoichiometric mixture. It should be noted that the concentration for the maximum rate of pressure rise and the concentration for P_{max} can differ.

B.2.4 Combustible Dust.

B.2.4.1 Solid particulates smaller than 420 µm (0.017 in.) (capable of passing through a U.S. No. 40 standard sieve) are classified as dusts. The fineness of a particular dust is characterized by particle size distribution. The maximum pressure and K_{St} increase with a decrease in the dust particle size, as shown in Figure B.2.4.1.

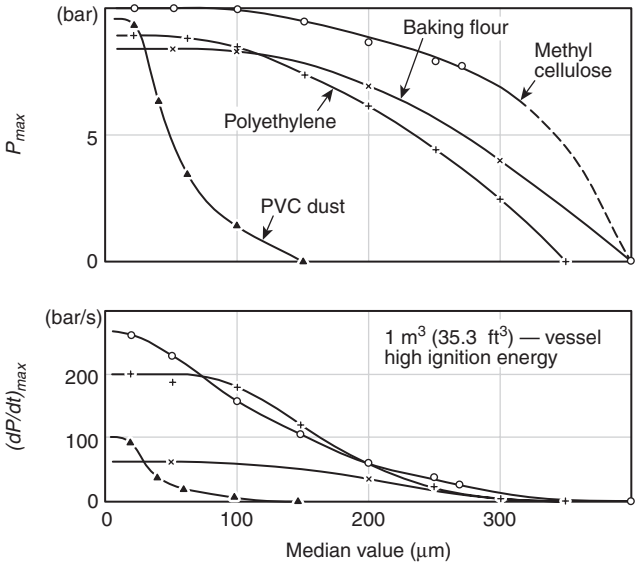

FIGURE B.2.4.1 Effect of Particle Size of Dusts on the Maximum Pressure and Maximum Rate of Pressure Rise [3].

B.2.4.2 Particle Size.

B.2.4.2.1 Dust particle size can be reduced as a result of attrition or size segregation during material handling and processing. Such handling and processing can lead to the gradual reduction of the average particle size of the material being handled and can increase the deflagration hazard of the dust. Minimum ignition energy is strongly dependent on particle size [1]. Figure B.2.4.2.1 illustrates this effect.

B.2.4.2.2 A combustible dust that is dispersed in a gaseous oxidizer and subjected to an ignition source does not always deflagrate. The ability of a mixture to propagate a deflagration depends on factors such as particle size, volatile content of solid particles, and moisture content.

B.2.4.3 The predominant mechanism of flame propagation in clouds of most combustible dusts is through the combustion of flammable gases emitted by particles heated to the point of vaporization or pyrolysis. Some dusts can propagate a flame through direct oxidation at the particle surface. Thus, the chemical and physical makeup of a dust has a direct bearing on its means of propagating a flame when dispersed in air.

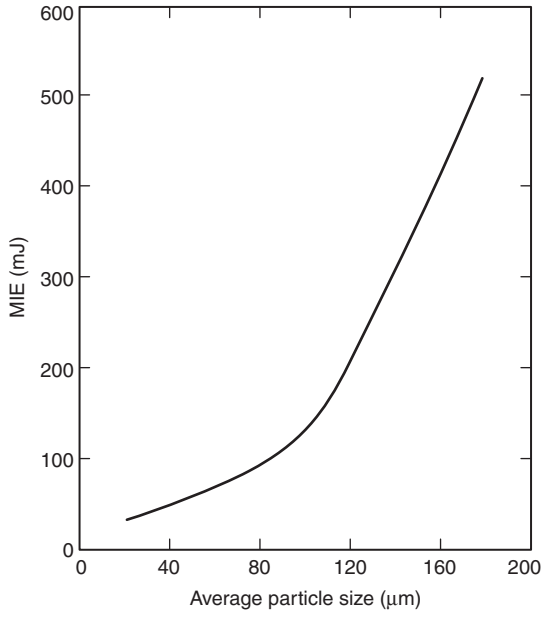

FIGURE B.2.4.2.1 Effect of Average Particle Diameter of a Typical Agricultural Dust on the Minimum Ignition Energy. (Unpublished data courtesy of U.S. Mine Safety and Health Administration.)

B.2.4.4 A minimum dust cloud concentration, commonly known as the lower flammable limit (LFL) or the minimum explosible concentration (MEC), can support flame propagation. The LFL of a dust is dependent on its composition and particle size distribution. Large particles participate inefficiently in the deflagration process.

B.2.4.5 Combustible dusts that accumulate on surfaces in process areas can become airborne by sudden air movement or mechanical disturbance. Dusts can pass through ruptured filter elements. In such instances, a combustible concentration of dispersed dust can become established where it normally would not be present.

B.2.4.6 Combustible dusts do not, for most practical purposes, exhibit upper flammable limits in air. This fact is a consequence of the flame propagation mechanism in dust clouds. Thus, deflagrations usually cannot be prevented by maintaining high dust cloud concentrations.

B.2.4.7 The combustion properties of a dust depend on its chemical and physical characteristics. The use of published dust flammability data can result in an inadequate vent design if the dust being processed has a smaller mean particle size than the dust for which data are available, or if other combustion properties of the dust differ. Particle shape is also a consideration in the deflagration properties of a dust. The flammability characteristics of a particular dust should be verified by test. *(See Section C.5.)*

The shape and particle size distribution of the dust is affected by the mechanical abuse that the material has undergone by the process that has created the dust in the first place. An example of this is a polymeric dust created by the suspension polymerization of styrene (in water) that results in a particle shape that are spherical (resembling small spheres).

Copyright 2014 National Fire Protection Association (NFPA). Licensed, by agreement, for individual use and download on October 4, 2014 to LEADER and READER for designated user PATTARAPORN SRITRAKOOL. No other reproduction or transmission in any form permitted without written permission of NFPA. For inquires or to report unauthorized use, contact licensing@nfpa.org.

A polymeric dust created by sending a bulk polymerized polystyrene block through a hammermill results in a dust that has been fractured and has many sharp edges and points. Even if the particle size distribution of the two types of particles are similar (suspension polymerization particles versus hammermill-generated dusts), the K_{St} values for these two samples will be different. The rate of pressure rise for the spherical particles will be slower than the dust sample created by the hammermill operation.

It will be permissible, for design purposes, to accept the K_{St} values subjected to a process similar to the final process design, but radical changes in the process involving differences in the type of particle shape require verification of the K_{St} values.

B.2.5 Hybrid Mixture.

B.2.5.1 The presence of a flammable gas in a dust-air mixture reduces the apparent lower flammable limit and ignition energy. The effect can be considerable and can occur even though both the gas and the dust are below their lower flammable limit. Careful evaluation of the ignition and deflagration characteristics of the specific mixtures is necessary. *(See Figure B.2.5.1.)*

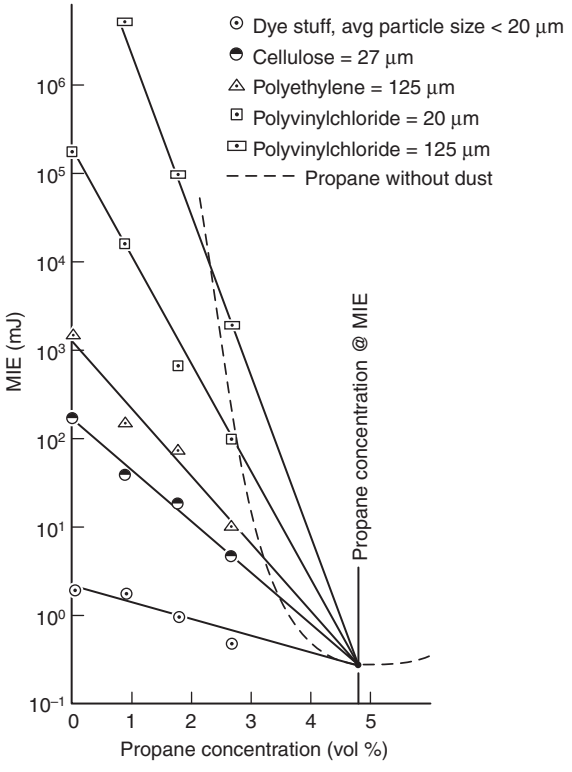

FIGURE B.2.5.1 Lowest MIE of Hybrid Mixtures Versus Propane Content.

B.2.5.2 It has been shown that the introduction of a flammable gas into a cloud of dust that is normally a minimal deflagration hazard can result in a hybrid mixture with increased maximum pressure, P_{max}, and maximum rate of pressure rise, $(dP/dt)_{max}$. An example of this phenomenon is the combustion of polyvinyl chloride dust in a gas mixture. *(See Figure B.2.5.2.)*

B.2.5.3 Situations where hybrid mixtures can occur in industrial processes include fluidized bed dryers drying solvent–wet combustible dusts, desorption of combustible solvent and monomer vapors from polymers, and coal-processing operations.

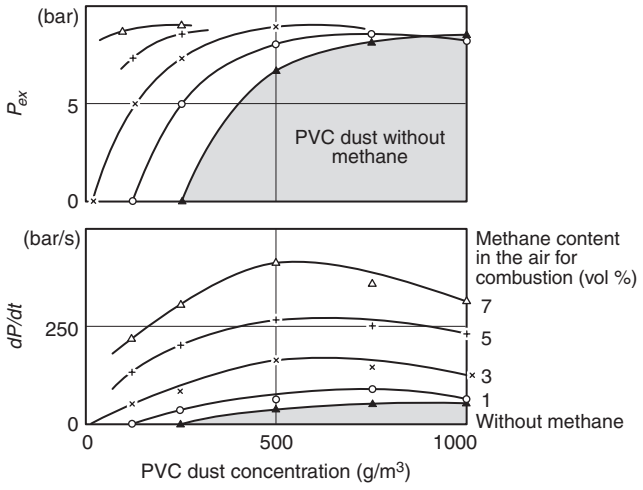

FIGURE B.2.5.2 Deflagration Data for Hybrid Mixtures of Polyvinyl Chloride Dust and Methane Gas in Air [4].

B.2.6 Mist. A mist of flammable or combustible liquids has deflagration characteristics that are analogous to dusts. The lower flammable limit for dispersed liquid mists varies with droplet size in a manner that is analogous to particle size for dusts. The determination of these deflagration characteristics is complicated by droplet dispersion, coalescence, and settling. A typical LFL for a fine hydrocarbon mist is 40 g/m^3 to 50 g/m^3, which is approximately equal to the LFL for combustible hydrocarbon gases in air at room temperature. Mists of combustible liquids can be ignited at initial temperatures well below the flash point of the liquid [62–65].

B.3 Oxidant.

B.3.1 The oxidant for a deflagration is normally the oxygen in the air. Oxygen concentrations greater than 21 percent tend to increase the fundamental burning velocity and increase the probability of transition to detonation. Conversely, oxygen concentrations less than 21 percent tend to decrease the rate of combustion. Most fuels have an oxygen concentration limit below which combustion cannot occur.

B.3.2 Substances other than oxygen can act as oxidants. While it is recognized that deflagrations involving the reaction of a wide variety of fuels and oxidizing agents (e.g., oxygen, chlorine, fluorine, oxides of nitrogen, and others) are possible, discussion of deflagration in this standard is confined to those cases where the oxidizing medium is normal atmospheric air consisting of 21 volume percent oxygen unless specifically noted otherwise.

B.4 Inert Material.

B.4.1 Inert Gases. Inert gases can be used to reduce the oxidant concentration.

B.4.2 Inert Powder.

B.4.2.1 Inert powder can reduce the combustibility of a dust by absorbing heat. The addition of inert powder to a combustible dust–oxidant mixture reduces the maximum rate of pressure rise and increases the minimum concentration of combustible dust necessary for ignition. See Figure B.4.2.1 for an example of the effect of admixed inert powder. A large amount of inert powder is necessary to prevent a deflagration; concentrations of 40 percent to 90 percent are needed.

Copyright 2014 National Fire Protection Association (NFPA). Licensed, by agreement, for individual use and download on October 4, 2014 to LEADER and READER for designated user PATTARAPORN SRITRAKOOL. No other reproduction or transmission in any form permitted without written permission of NFPA. For inquires or to report unauthorized use, contact licensing@nfpa.org.

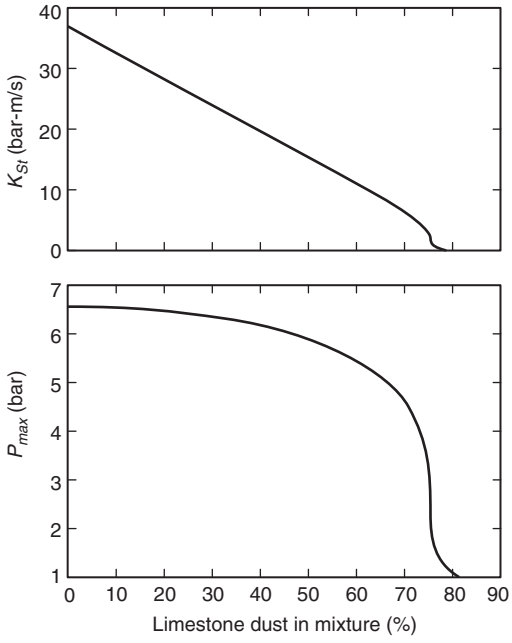

FIGURE B.4.2.1 Effect of Added Inert Dust on Deflagration Data for Coal Dust in Air [109].

B.4.2.2 Some inert powders in small concentrations, such as silica, can be counterproductive because they can increase the dispersibility of the combustible dust.

B.5 Ignition Sources. Some types of ignition sources include electric (e.g., arcs, sparks, and electrostatic discharges), mechanical (e.g., friction, grinding, and impact), hot surfaces (e.g., overheated bearings), and flames (welding torches and so forth).

B.5.1 One measure of the ease of ignition of a gas, dust, or hybrid mixture is its MIE. The MIE is typically less than 1 mJ for gases and often less than 100 mJ for dusts. Minimum ignition energies are reported for some gases and dust clouds [7, 17, 90, 92].

B.5.2 An ignition source such as a spark or a flame can travel from one enclosure to another. A hot, glowing particle such as a grinding spark can travel a considerable distance and can ignite a flammable mixture along the way. Similarly, stronger ignition sources, such as flame jet ignitions, deserve special consideration. A flame produced by an ignition source in one enclosure can become a much larger ignition source if it enters another enclosure. The increase in the energy of the ignition source can increase the maximum rate of pressure rise developed during a deflagration.

B.5.3 The location of the ignition source within an enclosure can affect the rate of pressure rise. In the case of unvented spherical enclosures, ignition at the center of the enclosure results in the highest rate of pressure rise. In the case of elongated enclosures, ignition near the unvented end of an elongated enclosure could result in higher overall pressure.

B.5.4 Simultaneous multiple ignition sources intensify the deflagration that results in an increased *dP/dt*.

B.6 Effect of Initial Temperature and Pressure. Any change in the initial absolute pressure of the fuel-oxidant mixture at a given initial temperature produces a proportionate change in the maximum pressure developed by a deflagration of the mixture in a closed vessel. Conversely, any change in the initial absolute temperature at a given initial pressure produces an inverse change in the maximum pressure attained. *(See Figure B.6.)* This effect can be substantial in cases of vapor explosions at cryogenic temperatures.

B.7 Effect of Turbulence.

B.7.1 Turbulence causes flames to stretch, which increases the net flame surface area that is exposed to unburned materials, which in turn leads to increased flame speed.

B.7.2 Initial turbulence in closed vessels results in higher rates of pressure rise and in somewhat higher maximum pressure than would occur if the fuel-oxidant mixture were initially subject to quiescent conditions. Turbulence results in an increase in the vent area needed. Figure B.7.2 illustrates the effects of turbulence and of fuel concentration.

B.7.3 Turbulence is also created during deflagration as gases and dusts move past obstacles within the enclosure. In elongated enclosures, such as ducts, turbulence generation is enhanced and flame speeds can increase to high values, causing transition from deflagration to detonation. Venting, because of the flow of unburned gases through the vent opening, can cause turbulence both inside and outside the enclosure.

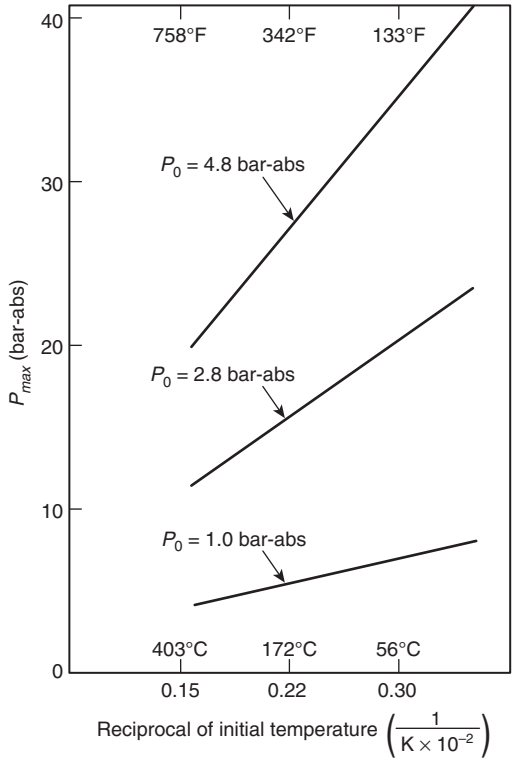

FIGURE B.6 Effect of Initial Temperature on the Maximum Deflagration Pressure of Near-Stoichiometric Mixtures of Methane-Air at Three Initial Pressures, P_0 [19].

Copyright 2014 National Fire Protection Association (NFPA). Licensed, by agreement, for individual use and download on October 4, 2014 to LEADER and READER for designated user PATTARAPORN SRITRAKOOL. No other reproduction or transmission in any form permitted without written permission of NFPA. For inquires or to report unauthorized use, contact licensing@nfpa.org.

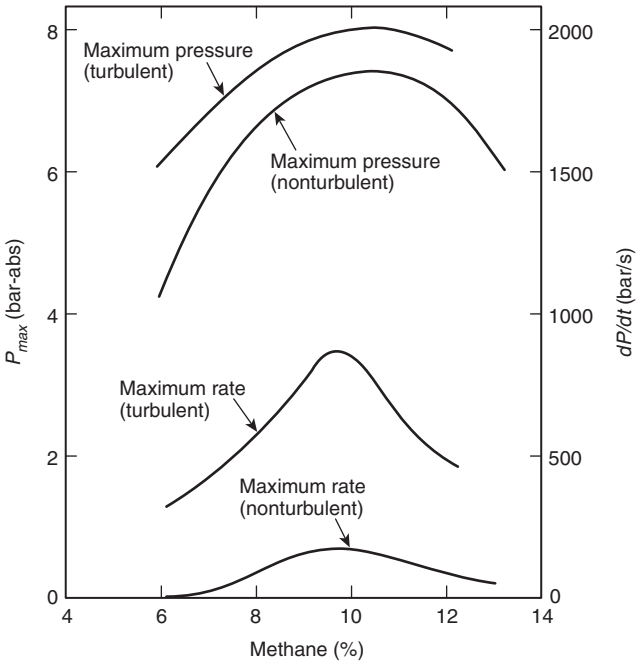

FIGURE B.7.2 Effect of Turbulence on the Maximum Pressure and Rate of Pressure Rise for Methane–Air Mixtures. (Adapted from [20] and [21])

Annex C Guidelines for Measuring Deflagration Parameters of Dusts

This annex is not a part of the requirements of this NFPA document but is included for informational purposes only.

C.1 General Comments. ASTM E 1226, *Standard Test Method for Explosibility of Dust Clouds*, sets forth a method for determining the maximum pressure and the rate of pressure rise of combustible dusts [96]. This annex discusses how that test procedure relates to the venting of large enclosures, but it does not describe the test procedure in detail. Since gases are not addressed in ASTM E 1226, test procedures are discussed in this annex.

ASTM E 2019, *Standard Test Method for Minimum Ignition Energy of a Dust Cloud in Air*, and ASTM E 582, *Standard Test Method for Minimum Ignition Energy and Quenching Distance in Gaseous Mixtures*, provide additional information on test methods for dusts and gases. Britton [92] reviewed ignition energy test methods that have been developed for dusts and gases.

C.2 Purpose. The purpose of deflagration index measurements is to predict the effect of the deflagration of a particular material (dust or gas) in a large enclosure without carrying out full-scale tests.

C.3 Basic Principles. Information presented in this standard and other international standards are based on large-scale tests carried out in vented vessels using a variety of test materials and vessel sizes [3, 47]. For each test material and vessel volume, the maximum reduced deflagration pressure, P_{red}, was found for a series of vents with various areas, A_v, and opening pressures, P_{stat}. Only a single material classification (the S_u or K_{St} index) related to burning rate needs to be experimentally obtained. A maximum closed volume deflagration pressure, P_{max}, also must be obtained. If the volume and the mechanical constraints of the enclosure to be protected are known, the user can determine from the equations the necessary venting.

C.3.1 The K_{St} Indices. The test dusts used during the large-scale tests were classified according to the maximum rate of pressure rise recorded when each was deflagrated in a 1 m^3 (35 ft^3) closed test vessel. The maximum rate of pressure rise found in the 1 m^3 (35 ft^3) vessel was designated K_{St}. K_{St} is not a fundamental material property but depends on the conditions of the test. The classification work carried out in the 1 m^3 (35 ft^3) vessel provides the only direct link between small-scale closed vessel tests and the large-scale vented tests.

C.3.2 Standardization of a Test Facility. The objective of standardization is to validly compare the deflagration behavior of a particular material with others for which full-scale test data are available. Without access to the 1 m^3 (35 ft^3) vessel in which the original K_{St} classifications were made, it is essential to standardize the test conditions that are employed using samples tested either in the 1 m^3(35 ft^3) vessel or in a vessel that has been standardized to it. ASTM defines the standardization requirements for dusts. To calibrate for dusts, which cannot be identified by composition alone, it is necessary to obtain samples that have established K_{St} values. *(See Section C.5.)*

C.3.3 Determination of the K_{St} Index. If the maximum rate of pressure rise is measured in a vessel with a volume of other than 1 m^3 (35 ft^3), Equation C.3.3 is used to normalize the value obtained to that of a 1 m^3 (35 ft^3) vessel:

$$\left(\frac{dP}{dt}\right)_{max} \cdot \left(V^{1/3}\right) = K \qquad \textbf{(C.3.3)}$$

where:
P = pressure (bar)
t = time (s)
V = volume (m^3)
K = normalized K_{St} index (bar-m/s)

The measured maximum deflagration pressure, P_{max}, is not scaled for volume, and the experimental value can be used for design purposes. The maximum rate of pressure rise is normalized to a volume of 1 m^3 (35 ft^3) using Equation C.3.3. If the maximum rate of pressure rise is given in bar per second, and the test volume is given in cubic meters, the equation defines the K_{St} index for the test material.

Example: The volume of a spherical test vessel is 26 L (0.026 m^3), and the maximum rate of pressure rise, determined from the slope of the pressure-time curve, is 572 bar/s (8300 psi/s). Substituting these values for the variables in Equation C.3.3, the normalized index equals 572 $(0.026)^{1/3}$, or 169 bar-m/s.

C.3.4 Effect of Volume on K_{St}. The effect of vessel volume alone on K_{St} values that are obtained for particular dusts has not been well established. Dusts cannot be suspended in a quiescent manner, and the initial turbulence introduces a nonscalable variable. However, it cannot be assumed that K_{St} in Equation C.3.3 is independent of vessel volume. It has been found [47] that K_{St} values that are obtained in the original 1 m^3 (35 ft^3) classifying vessel cannot be reproduced in spherical vessels with volumes of less than 16 L or in the cylindrical Hartmann apparatus. All existing facilities that have standardized equipment use a spherical test vessel with a volume of at least 20 L or a squat cylinder of

Copyright 2014 National Fire Protection Association (NFPA). Licensed, by agreement, for individual use and download on October 4, 2014 to LEADER and READER for designated user PATTARAPORN SRITRAKOOL. No other reproduction or transmission in any form permitted without written permission of NFPA. For inquires or to report unauthorized use, contact licensing@nfpa.org.

larger volume [such as the 1 m^3 (35 ft^3) classifying vessel itself]. The principle of K_{St} standardization in such vessels is to adjust test conditions (particularly initial turbulence) until it can be demonstrated that all dusts yield K_{St} values that are in agreement with the values that have been established in the 1 m^3 (35 ft^3) vessel [96]. If vessels of volumes other than 1 m^3 (35 ft^3) are used, Equation C.3.3 must be used. Use of vessels with different volumes can lead to errors that are dependent on K_{St}. The possibility of such errors should be considered where test data are applied to vent design [77].

C.3.5 Effect of Initial Pressure. The initial pressure for deflagration testing is 1 standard atm (absolute pressure of 14.7 psi, 760 mm Hg, or 1.01 bar). Alternatively, a standard pressure of 1 bar can be used with negligible error. If initial pressures are not of standard value, they should be reported, and correction methods should be applied. P_{max} is proportional to initial test pressure, and any difference between initial test pressure and 1 standard atm is multiplied by the deflagration pressure ratio (usually between 7 and 12) in the measured P_{max} value. Measured values are affected to a smaller degree. The effect of initial pressure is most important where tests are conducted at ambient pressure. Ambient pressure can vary from extremes of absolute pressure of 0.89 bar to 1.08 bar (12.9 psi to 15.6 psi), even at sea level, and it decreases with elevation. For example, at an elevation of 2 km (1.25 mi), the average absolute pressure at a latitude of 50°N is 0.79 bar-abs (11.5 psi). It is readily seen that a P_{max} value measured at such an elevation is approximately 20 percent lower than that measured at 1 standard atm, assuming a 10:1 deflagration pressure ratio. Conducting tests under standard conditions, rather than correcting the measured values, is always recommended.

C.4 Gas Testing.

C.4.1 Fundamental Burning Velocity. (Reserved)

C.4.2 Maximum Explosion Pressure, P_{max}. The test vessel used for gas testing should be spherical, with a volume of at least 5 L and a recommended volume of 20 L or greater. Because the only source of initial turbulence is the ignition source employed, it is important that the flame front is not unduly distorted by the ignition process. The ignition source should be centrally located and should approximate a point source. A discrete capacitor discharge carrying no great excess of energy above that needed to ignite the mixture is recommended. Fused-wire igniters and chemical igniters can cause multipoint ignition and should not be used for routine P_{max} measurements in small vessels.

Verification should be made that each gas mixture is well mixed and quiescent immediately prior to ignition. The maximum pressure is measured systematically for several compositions close to the stoichiometric mixture until the maximum value *(P_{max})* has been determined. A table of P_{max} values is then established for the standardized gases as measured in the test vessel.

The P_{max} value for the test gas first has to be determined under conditions identical to those used for standardization.

A database in which P_{max} values are given for a wide variety of gases that have been tested under the standardized conditions should be established for the test equipment. P_{max} values should not be reported unless the database or, at a minimum, the P_{max} values for the standardized gases are also reported.

Most flammable gas mixtures at the optimum concentration can be ignited conveniently in small vessels by using a capacitor spark of 100 mJ or less, which can serve as a normal ignition source for standardization. However, the ignition recommendations for certain exceptional gas mixtures can exceed this figure substantially. Before a gas mixture is designated as noncombustible, it should be subjected to a strong ignition source. *(See Section C.6.)*

C.5 Dust Testing. Dust samples that have the same chemical composition do not necessarily display similar K_{St} values or even similar deflagration pressures *(P_{max})*. The burning rate of a dust depends markedly on the particle size distribution and shape and on other factors such as surface oxidation (aging) and moisture content. The form in which a given dust is tested should bear a direct relation to the form of that dust in the enclosure to be protected. Although Annex F provides both K_{St} and dust identities for samples that are tested in a 1 m^3 (35 ft^3) vessel, it should not be assumed that other samples of the same dusts yield the same K_{St} values. Such data cannot be used for vessel standardization but are useful in determining trends. The test vessel that is to be used for routine work should be standardized using dust samples whose K_{St} and P_{max} characteristics have been established in the standard 1 m^3 (35 ft^3) vessel [96].

C.5.1 Obtaining Samples for Standardization. Samples should be obtained that have established K_{St} values in St-1, St-2, and St-3 dusts. At the time this standard was published, suitable standard samples (with the exception of lycopodium dust) were not generally available. ASTM E 1226, *Standard Test Method for Explosibility of Dust Clouds*, defines the required agreement with values that are generated in the standard 1 m^3 (35 ft^3) vessel.

C.5.2 Effect of Dust-Testing Variables. The following factors affect the measured K_{St} for a particular spherical test vessel (20 L or greater) and a particular prepared dust sample:

(1) Mass of sample dispersed or concentration
(2) Uniformity of dispersion
(3) Turbulence at ignition
(4) Ignition strength

The concentration is not subject to standardization, because it should be varied for each sample that is tested until the maximum K_{St} has been determined. The maximum K_{St} usually corresponds to a concentration that is several times greater than stoichiometric. ASTM E 1226, *Standard Test Method for Explosibility of Dust Clouds*, recommends testing a series of concentrations. Measured K_{St} is plotted against concentration, and tests continue until the maximum is determined. By testing progressively leaner mixtures, the minimum explosive concentration (lean limit or LFL) can similarly be determined. The limit can be affected by ignition energy.

C.5.2.1 Obtaining a Uniform Dust Dispersion. The uniformity of dust dispersion is implied by the ability to achieve consistent and reproducible K_{St} values in agreement with the established values for the samples that are tested. Poor dispersion leads to low values of K_{St} and P_{max}.

A number of dust dispersion methods exist. For small vessels, the most common methods used are the perforated ring and the whipping hose. The perforated ring *(see [96] and Section G.2)* fits around the inside surface of the test vessel and is designed to disperse the dust in many directions. A ring of this

Copyright 2014 National Fire Protection Association (NFPA). Licensed, by agreement, for individual use and download on October 4, 2014 to LEADER and READER for designated user PATTARAPORN SRITRAKOOL. No other reproduction or transmission in any form permitted without written permission of NFPA. For inquires or to report unauthorized use, contact licensing@nfpa.org.

type is described in Donat [47] in relation to the dust classification work in the 1 m^3 (35 ft^3) vessel. However, the device can clog in the presence of waxy materials, low-density materials, and materials that become highly electrically charged during dispersion. To minimize these problems, the whipping hose has been used [77]. This is a short length of heavy-duty rubber tubing that "whips" during dust injection and disperses the dust. Comparison of these two methods under otherwise identical conditions [77] indicates that they are not necessarily interchangeable and that the dispersion method should be subject to standardization.

C.5.2.2 Standardizing Turbulence at Ignition. During dust injection, the partially evacuated test vessel receives a pulse of air from the air bomb that brings the pressure to 1 atm (absolute) and disperses dust placed below the dispersion system. Some time after the end of injection, the igniter is fired. The following test condition variables affect turbulence at ignition in the test vessel:

(1) Air bomb volume
(2) Air bomb pressure
(3) Initial vessel pressure
(4) Injection time
(5) Ignition delay time

References [77] and [80] describe combinations of the variables in C.5.2.2(1) through (5) that have yielded satisfactory results. For example, a 26 L test vessel [77] employs a 1 L air bomb at absolute pressure of 300 psi (20.7 bar). Having established the air bomb volume and pressure, the initial test vessel reduced pressure and injection time are set so that, after dust injection, the test vessel is at 1 atm (absolute). It should be noted that the air bomb and test vessel pressures do not need to equalize during dust dispersion. Injection time and ignition delay time are set using solenoid valves that are operated by a timing circuit. For standardization, reproducibility of timing is essential, and it is possible that the optimum ignition delay time is approximately 10 milliseconds. Fast-acting valves and accurate timing devices should be employed.

Standardization that uses well-characterized samples *(see C.5.1)* is considered complete when samples in St-1, St-2, and St-3 dusts have been shown to yield the expected K_{St} (to within acceptable error) with no adjustment of the variables specified in C.5.2.2. In addition, the mode of ignition *(see C.5.2.3)* should not be changed for standardized testing.

C.5.2.3 Ignition Source. The ignition source can affect determined K_{St} values even if all other variables determined remain constant. It has been found that, in a 1 m^3 (35 ft^3) vessel, capacitor discharge sources of 40 mJ to 16 J provide K_{St} and P_{max} data comparable to those obtained using a 10 kJ chemical igniter [47]. In the same vessel, a permanent spark gap underrated both K_{St} and P_{max} for a range of samples. References [77] and [81] provide a description of how comparable K_{St} and P_{max} values were obtained in vessels of approximately 20 L, using between one and six centrally located electric match igniters rated at 138 J each.

Various types of electrically initiated chemical ignition source devices have proven satisfactory during routine tests. The most popular are two 138 J electric match igniters and two 5 kJ pyrotechnic devices. These ignition sources are not interchangeable, and standardization should be based on a fixed type of igniter. The matches have insufficient power to ignite all combustible dust suspensions. Therefore, any dust that appears to be classified as St-0 should be retested using two 5 kJ pyrotechnic igniters *(see Section C.6)*. The routine use of the pyrotechnic igniter as a standardized source necessitates a method of correction for its inherent pressure effects in small vessels [77]. Therefore, neither source is ideal for all applications.

C.5.3 Dust Preparation for K_{St} Testing. It is necessary for a given dust to be tested in a form that bears a direct relation to the form of that dust in any enclosure to be protected *(see Section C.5)*. Only standardized dusts and samples taken from such enclosures are normally tested in the as-received state. The following factors affect the K_{St}:

(1) Size distribution
(2) Particle shape
(3) Contaminants (gas or solid)

Although dusts can be produced in a coarse state, attrition can generate fines. Fines can accumulate in cyclones and baghouses, on surfaces, and in the void space when large enclosures are filled. For routine testing, it is assumed that such fines can be represented by a sample screened to sub-200 mesh (75 μm). For comprehensive testing, cascade screening into narrow-size fractions of constant weight allows K_{St} to be determined for a series of average diameters. Samples taken from the enclosure help in determining representative and worst-case size fractions that are to be tested. If a sufficient sample cannot be obtained as sub-200 mesh (75 μm), it might be necessary to grind the coarse material. Grinding can introduce an error by affecting the shape of the fines produced. The specific surface of a sample, which affects burning rate, depends on both size distribution and particle shape.

Where fines accumulation is considered, the accumulation of additives also has to be considered. Many dust-handling processes can accumulate additives such as antioxidants that are included as only a small fraction of the bulk. Such accumulation can affect K_{St} and, by reducing the ignition energy necessary to ignite the mixture, can increase the probability of a deflagration [77].

Flammable gases can be present in admixtures with dusts (hybrid mixtures), and many accumulate with time as a result of gas desorption from the solid phase. Where this possibility exists, both K_{St} and ignition energy can be affected. The effect of hybrid mixtures can be synergistic to the deflagration, and a gas that is present at only a fraction of its lower flammable limit needs to be considered [3]. Testing of hybrid mixtures can be carried out by injecting the gas-dust mixture into an identical gas mixture that is already present in the test vessel. The gas concentration (determined based on partial pressure at the time of ignition) should be systematically varied to determine the range of hybrid K_{St} values that can apply to the practical system.

The use of a whipping hose *(see C.5.2.1)* or rebound nozzle should avoid the necessity of using inert flow-enhancing additives to help dust dispersion in most cases. Such additives should not be used in testing.

C.6 Classification as Noncombustible. A gas or dust mixture cannot be classed as noncombustible (for example, St-0 dust) unless it has been subjected repeatedly to a strong chemical ignition source of 10 kJ. If a material fails to ignite over the range of concentrations tested using the standard ignition source, then, after the equipment is checked using a material of known behavior, the test sequence is repeated

Copyright 2014 National Fire Protection Association (NFPA). Licensed, by agreement, for individual use and download on October 4, 2014 to LEADER and READER for designated user PATTARAPORN SRITRAKOOL. No other reproduction or transmission in any form permitted without written permission of NFPA. For inquires or to report unauthorized use, contact licensing@nfpa.org.

using a 10 kJ chemical igniter. It is necessary to establish that the strong ignition source cannot yield a pressure history in the vessel that can be confused with any deflagration it produces.

It can be impossible to unequivocally determine whether a dust is noncombustible in the case of small vessels (e.g., the 20 L vessel). Such determination is difficult because strong igniters such as 10 kJ pyrotechnics tend to overdrive the flame system, in addition to producing marked pressure effects of their own. Cashdollar and Chatrathi [97] have demonstrated the overdriving effect when determining minimum explosible dust concentrations. Mixtures that are considered to be explosible in a 20 L (0.02 m^3) vessel do not propagate flame in a 1 m^3 (35 ft^3) vessel at the same concentration. Cashdollar and Chatrathi [97] recommend the use of a 2.5 kJ igniter for lower flammable limit measurements, which produced results similar to those of the 10 kJ igniter in a 1 m^3(35 ft^3) vessel. In contrast, ASTM E 1515, *Standard Test Method for Minimum Explosible Concentration of Combustible Dusts*, specifies the use of a 5 kJ ignition source for MEC (lower flammable limit) testing. The ideal solution is to use large (10 kJ) igniters in larger [1 m^3 (35 ft^3)] vessels. The authors further recommend an ignition criterion of an absolute pressure ratio greater than 2 plus a K_{St} greater than 1.5 bar-m/s.

An alternative to the use of the strong ignition source and its associated pressure effects in small vessels is to test fractions of a finer size than the routine sub-200 mesh (75 μm). Dust ignition energy varies with the approximate cube of particle diameter [77]; therefore, the use of electric matches can be extended to identification of St-0 dusts. Similarly, the dust lean limit concentration can be subject to ignition energy effects, which decrease with the sample's decreasing particle size. Such effects largely disappear where sub-400 mesh samples are tested. In the case of gases, a strong ignition source that consists of capacitance discharges in excess of 10 J, or fused-wire sources of similar energy, can be used. Such sources are routinely used for flammable limit determination.

C.7 Instrumentation Notes. Data can be gathered by analog or digital methods, but the rate of data collection should be capable of resolving a signal of 1 kHz or higher frequency (for digital methods, more than one data point per millisecond). For fast-burning dusts and gases, particularly in small vessels, faster rates of data logging can be necessary to achieve resolution. Data-logging systems include oscilloscopes, oscillographs, microcomputers, and other digital recorders. An advantage of digital methods is that both the system operation and subsequent data reduction can be readily automated using computer methods [77]. A further advantage of digital methods is that expansion of the time axis enables a more accurate measurement of the slope of the pressure-time curve than can be obtained from an analog oscilloscope record. Where using automated data reduction, it is essential to incorporate appropriate logic to mitigate the effect of spurious electrical signals. Such signals can be reduced by judicious cable placement, grounding, and screening, but they are difficult to avoid altogether. It is advantageous to confirm automated values manually using the pressure-time curve generated.

Where gas mixtures are created by the method of partial pressures, it is important to incorporate a gas-temperature measuring device (for example, a thermocouple) to ensure that the mixture is created at a constant temperature. Gas analysis should be used where possible.

It has been found that piezoelectric pressure transducers are satisfactory for deflagration pressure measurements in dust-testing systems as a result of good calibration stability. The transducer should be flush-mounted to the inside wall of the vessel and coated with silicone rubber, thereby minimizing acoustic and thermal effects.

The entire test system should be routinely maintained and subjected to periodic tests using standard materials of known behavior. Soon after initial standardization, large quantities of well-characterized dust samples (St-1, St-2, and St-3) of a type not subject to aging or other effects should be prepared. Where stored, these dusts can be used for periodic system performance tests.

Annex D Deflagration Characteristics of Select Flammable Gases

This annex is not a part of the requirements of this NFPA document but is included for informational purposes only.

D.1 General. The values of fundamental burning velocity given in Table D.1(a) are based on NACA Report 1300 [82]. For the purpose of this guide, a reference value of 46 cm/s for the fundamental burning velocity of propane has been used. The compilation given in Perry's *Chemical Engineers' Handbook* [83] is based on the same data (NACA Report 1300) but uses a different reference value of 39 cm/s for the fundamental burning velocity of propane. The reason for using the higher reference value (46 cm/s) is to obtain closer agreement with more recently published data as presented in Table D.1(b).

D.2 P_{max} Values. Table D.2 provides P_{max} values for several gases. The values were determined by tests in a 5 L (0.005 m^3) sphere with ignition by an electric spark of approximately 10 J energy. Where the fuels had sufficient vapor pressure, the tests were done at room temperature. Where the fuels did not have sufficiently high vapor pressure, the tests were done at elevated temperature, and the test results were then extrapolated to room temperature. The source of the test data is the laboratory of Dr. W. Bartknecht, Ciba Geigy Co., Basel, Switzerland (private communication).

Copyright 2014 National Fire Protection Association (NFPA). Licensed, by agreement, for individual use and download on October 4, 2014 to LEADER and READER for designated user PATTARAPORN SRITRAKOOL. No other reproduction or transmission in any form permitted without written permission of NFPA. For inquires or to report unauthorized use, contact licensing@nfpa.org.

Table D.1(a) Fundamental Burning Velocities of Selected Gases and Vapors

Gas	Fundamental Burning Velocity (cm/s)	Gas	Fundamental Burning Velocity (cm/s)
Acetone	54	Ethyl acetate	38
Acetylene	166*	Ethylene oxide	108
Acrolein	66	Ethylenimine	46
Acrylonitrile	50	Gasoline (100-octane)	40
Allene (propadiene)	87	*n*-Heptane	46
Benzene	48	Hexadecane	44
n-butyl-	37	1,5-Hexadiene	52
tertbutyl-	39	*n*-Hexane	46
1,2-dimethyl-	37	1-Hexene	50
1,2,4-trimethyl-	39	1-Hexyne	57
1,2-Butadiene (methylallene)	68	3-Hexyne	53
1,3-Butadiene	64	HFC-23 (Difluoromethane)	6.7
2,3-dimethyl-	52	HFC-143 (1,1,2-Trifluoroethane)	13.1
2-methyl-	55	HFC-143a (1,1,1-Trifluoroethane)	7.1
n-Butane	45	HFC-152a (1,1-Difluoroethane)	23.6
2-cyclopropyl-	47	Hydrogen	312*
2,2-dimethyl-	42	Isopropyl alcohol	41
2,3-dimethyl-	43	Isopropylamine	31
2-methyl-	43	Jet fuel, grade JP-1 (average)	40
2,2,3-trimethyl-	42	Jet fuel, grade JP-4 (average)	41
Butanone	42	Methane	40*
1-Butene	51	diphenyl-	35
2-cyclopropyl-	50	Methyl alcohol	56
2,3-dimethyl-	46	1,2-Pentadiene (ethylallene)	61
2-ethyl-	46	cis-1,3-Pentadiene	55
2-methyl-	46	trans-1,3-Pentadiene (piperylene)	54
3-methyl-	49	2-methyl-(cis or trans)	46
2,3-dimethyl-2-butene	44	1,4-Pentadiene	55
2-Buten 1-yne (vinylacetylene)	89	2,3-Pentadiene	60
1-Butyne	68	*n*-Pentane	46
3,3-dimethyl-	56	2,2-dimethyl-	41
2-Butyne	61	2,3-dimethyl-	43
Carbon disulfide	58	2,4-dimethyl-	42
Carbon monoxide	46	2-methyl-	43
Cyclobutane	67	3-methyl-	43
ethyl-	53	2,2,4-trimethyl-	41
isopropyl-	46	1-Pentene	50
methyl-	52	2-methyl-	47
Methylene	61	4-methyl-	48
Cyclohexane	46	cis-2-Pentene	51
methyl-	44	1-Pentene	63
Cyclopentadiene	46	4-methyl-	53
Cyclopentane	44	2-Pentyne	61
methyl-	42	4-methyl-	54
Cyclopropane	56	Propane	46*
cis-1,2-dimethyl-	55	2-cyclopropyl-	50
trans-1,2-dimethyl-	55	1-deutero-	40
ethyl-	56	1-deutero-2-methyl-	40
methyl-	58	2-deutero-2-methyl-	40
1,1,2-trimethyl-	52	2,2-dimethyl-	39
trans-Decalin (decahydronaphthalene)	36	2-methyl-	41
n-Decane	43	2-cyclopropyl	53
1-Decene	44	2-methyl-	44
Diethyl ether	47	Propionaldehyde	58
Dimethyl ether	54	Propylene oxide (1,2-epoxypropane)	82
Ethane	47	1-Propyne	82
Ethene (ethylene)	80*	Spiropentane	71
		Tetrahydropyran	48
		Tetralin (tetrahydronaphthalene)	39
		Toluene (methylbenzene)	41

*Gases that have been critically examined in [84] or [85] with regard to fundamental burning velocity.
Table D.1(b) compares selected values from these references with those in this table.

Copyright 2014 National Fire Protection Association (NFPA). Licensed, by agreement, for individual use and download on October 4, 2014 to LEADER and READER for designated user PATTARAPORN SRITRAKOOL. No other reproduction or transmission in any form permitted without written permission of NFPA. For inquires or to report unauthorized use, contact licensing@nfpa.org.

Table D.1(b) Comparison of Fundamental Burning Velocities for Selected Gases, Fundamental Burning Velocity (cm/s)

Gas	Table D.1(a)	Andrews and Bradley [84] In air	Andrews and Bradley [84] In oxygen	France and Pritchard [85] (in air)
Acetylene	166	158	1140	—
Ethylene	80	79	—	0
Hydrogen	312	310	1400	347
Methane	40	45	450	43
Propane	46	—	—	46

Table D.2 Flammability Properties of Gases 5 L (0.005 m^3) Sphere; E = 10 J, normal conditions [101]

Flammable Material	P_{max} (bar)
Acetophenone[a]	7.6
Acetylene	10.6
Ammonia[b]	5.4
β-Naphthol[c]	4.4
Butane	8.0
Carbon disulfide	6.4
Diethyl ether	8.1
Dimethyl formamide[a]	8.4
Dimethyl sulfoxide[a]	7.3
Ethane[a]	7.8
Ethyl alcohol	7.0
Ethyl benzene[a]	7.4
Hydrogen	6.8
Hydrogen sulfide	7.4
Isopropanol[a]	7.8
Methane	7.1
Methanol[a]	7.5
Methylene chloride	5.0
Methyl nitrite	11.4
Neopentane	7.8
Octanol[a]	6.7
Octyl chloride[a]	8.0
Pentane[a]	7.8
Propane	7.9
South African crude oil	6.8–7.6
Toluene[a]	7.8

[a]Measured at elevated temperatures and extrapolated to 25°C (77°F) at normal conditions.
[b]E = 100 J–200 J.
[c]200°C (392°F).

Annex E Estimating Fundamental Burning Velocity

This annex is not a part of the requirements of this NFPA document but is included for informational purposes only.

E.1 Estimating Method. Fundamental burning velocity, S_u, is taken as the largest value of laminar burning velocity, S, obtained by any mixture of a flammable gas in air. S_u is determined experimentally and is a characteristic of any particular fuel whether as a single component or as a mixture of flammable components.

The value of S_u can be estimated using the method given here if an experimental value of S_u is not available. Other methods can be used to estimate S_u, such as the maximum experimental safe gap (MESG) correlation in Schampel.

Britton proposed the following correlation for estimating S_u [122]:

$$S_u = 1666.1 - 34.228\left(-\Delta H_c / \chi_{OF}\right) + 0.18039\left(-\Delta H_c / \chi_{OF}\right)^2 \quad \textbf{(E.1)}$$

where:
S_u = fundamental burning velocity (cm/s)
ΔH_c = heat of combustion of the fuel (kcal/mole)
χ_{OF} = stoichiometric ratio of oxygen to fuel

For fuel species consisting of carbon, hydrogen, oxygen, nitrogen, or halogens ($C_cH_hO_mN_nX_x$) with stoichiometric coefficients c, h, m, n, x, the stoichiometric ratio of oxygen to fuel is calculated as follows:

$$\chi_{OF} = c + (h\text{-}x\text{-}2m)/4$$

χ_{OF} can be used to calculate the stoichiometric ratio of the fuel in air as follows:

$$C_{st} = 100/(1 + 4.773\chi_{OF})$$

Example:
Methane (CH_4)
ΔH_c = –192 kcal/mole fuel
χ_{OF} = c + (h-x-2m)/4 = 1 + (4-0-0)/4 = 2
$-\Delta H_c/\chi_{OF}$ = (192 kcal/mole fuel) / (2 moles fuel per mole of oxygen) = 96 kcal/mole oxygen

Figure E.1, from Britton [122], compares the predictions made with the expression given in Equation E.1 with laminar burning velocity (LBV) data. The LBV data are from NFPA 68 (NACA tube data with a reference value of 46 cm/s for propane).

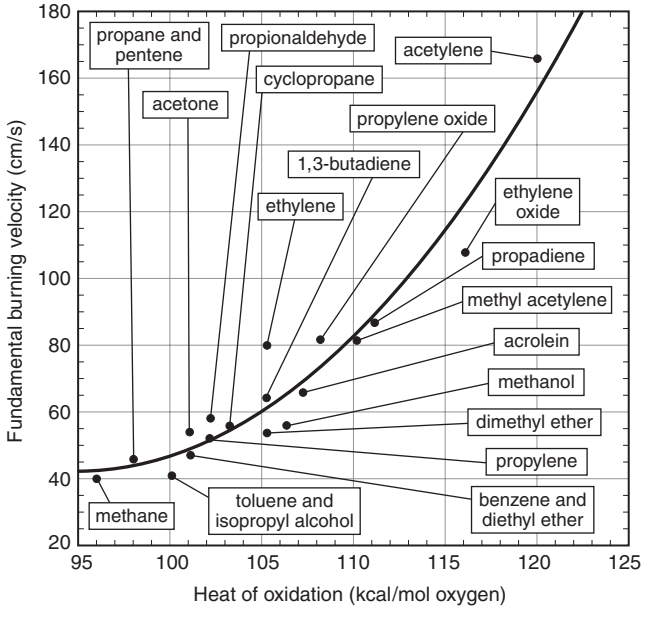

FIGURE E.1 Comparison of Predicted and Measured Burning Velocities.

E.2 Using Estimated or New S_u Data. Whether values for unlisted materials are estimated or determined by test, they must be adjusted using the burning velocity of propane. This is calculated

Copyright 2014 National Fire Protection Association (NFPA). Licensed, by agreement, for individual use and download on October 4, 2014 to LEADER and READER for designated user PATTARAPORN SRITRAKOOL. No other reproduction or transmission in any form permitted without written permission of NFPA. For inquires or to report unauthorized use, contact licensing@nfpa.org.

using a single point ratio of the tested or estimated value for propane to the accepted value of 46 cm/s, given in Equation E.2. The test for propane and the test for the new material should be performed using the same method and conditions.

$$LBV_{68,new} = LBV_{test,new} \frac{46 \text{ cm/s}}{LBV_{test,propane}} \quad \textbf{(E.2)}$$

Annex F Deflagration Characteristics of Select Combustible Dusts

This annex is not a part of the requirements of this NFPA document but is included for informational purposes only.

F.1 Introduction. Table F.1(a) through Table F.1(e) are based on information obtained from Forschungsbericht Staubexplosionen [86].

Table F.1(a) Agricultural Products

Material	Mass Median Diameter (μm)	Minimum Flammable Concentration (g/m^3)	P_{max} (bar)	K_{St} (bar-m/s)	Dust Hazard Class
Cellulose	33	60	9.7	229	2
Cellulose pulp	42	30	9.9	62	1
Cork	42	30	9.6	202	2
Corn	28	60	9.4	75	1
Egg white	17	125	8.3	38	1
Milk, powdered	83	60	5.8	28	1
Milk, nonfat, dry	60	—	8.8	125	1
Soy flour	20	200	9.2	110	1
Starch, corn	7	—	10.3	202	2
Starch, rice	18	60	9.2	101	1
Starch, wheat	22	30	9.9	115	1
Sugar	30	200	8.5	138	1
Sugar, milk	27	60	8.3	82	1
Sugar, beet	29	60	8.2	59	1
Tapioca	22	125	9.4	62	1
Whey	41	125	9.8	140	1
Wood flour	29	—	10.5	205	2

Table F.1(b) Carbonaceous Dusts

Material	Mass Median Diameter (μm)	Minimum Flammable Concentration (g/m^3)	P_{max} (bar)	K_{St} (bar-m/s)	Dust Hazard Class
Charcoal, activated	28	60	7.7	14	1
Charcoal, wood	14	60	9.0	10	1
Coal, bituminous	24	60	9.2	129	1
Coke, petroleum	15	125	7.6	47	1
Lampblack	<10	60	8.4	121	1
Lignite	32	60	10.0	151	1
Peat, 22% H_2O	—	125	84.0	67	1
Soot, pine	<10	—	7.9	26	1

Copyright 2014 National Fire Protection Association (NFPA). Licensed, by agreement, for individual use and download on October 4, 2014 to LEADER and READER for designated user PATTARAPORN SRITRAKOOL. No other reproduction or transmission in any form permitted without written permission of NFPA. For inquires or to report unauthorized use, contact licensing@nfpa.org.

Table F.1(c) Chemical Dusts

Material	Mass Median Diameter (μm)	Minimum Flammable Concentration (g/m^3)	P_{max} (bar)	K_{St} (bar-m/s)	Dust Hazard Class
Adipic acid	<10	60	8.0	97	1
Anthraquinone	<10	—	10.6	364	3
Ascorbic acid	39	60	9.0	111	1
Calcium acetate	92	500	5.2	9	1
Calcium acetate	85	250	6.5	21	1
Calcium stearate	12	30	9.1	132	1
Carboxy- methyl-cellulose	24	125	9.2	136	1
Dextrin	41	60	8.8	106	1
Lactose	23	60	7.7	81	1
Lead stearate	12	30	9.2	152	1
Methyl-cellulose	75	60	9.5	134	1
Paraformaldehyde	23	60	9.9	178	1
Sodium ascorbate	23	60	8.4	119	1
Sodium stearate	22	30	8.8	123	1
Sulfur	20	30	6.8	151	1

Table F.1(d) Metal Dusts

Material	Mass Median Diameter (μm)	Minimum Flammable Concentration (g/m^3)	P_{max} (bar)	K_{St} (bar-m/s)	Dust Hazard Class
Aluminum	29	30	12.4	415	3
Bronze	18	750	4.1	31	1
Iron carbonyl	<10	125	6.1	111	1
Magnesium	28	30	17.5	508	3
Phenolic resin	55	—	7.9	269	2
Zinc	10	250	6.7	125	1
Zinc	<10	125	7.3	176	1

For each dust, the tables show the mass median diameter of the material tested as well as the following test results obtained in a 1 m^3 (35 ft^3) vessel:

(1) Minimum explosive concentration
(2) Maximum pressure developed by the explosion, P_{max}
(3) Maximum rate of pressure rise $(dP/dt)_{max}$
(4) K_{St} value, which is equivalent to $(dP/dt)_{max}$ because of the size of the test vessel
(5) Dust hazard class as St-1, St-2, or St-3, as defined in Table B.1.2.4

F.2 Explanation of Test Data. The user is cautioned that test data on the flammability characteristics of dusts are sample specific. Dusts that have the same chemical identities — for example, as a chemical — or that are nominally derived from the same sources, such as grain dusts, can vary widely in K_{St} values. For example, various calcium stearate dusts have been found to have ranges of K_{St} values that designate the respective dusts as in St-1 through St-3. Therefore, care should be taken in the use of data from these tables.

Copyright 2014 National Fire Protection Association (NFPA). Licensed, by agreement, for individual use and download on October 4, 2014 to LEADER and READER for designated user PATTARAPORN SRITRAKOOL. No other reproduction or transmission in any form permitted without written permission of NFPA. For inquires or to report unauthorized use, contact licensing@nfpa.org.

Table F.1(e) Plastic Dusts

Material	Mass Median Diameter (μm)	Minimum Flammable Concentration (g/m^3)	P_{max} (bar)	K_{St} (bar-m/s)	Dust Hazard Class
(poly) Acrylamide	10	250	5.9	12	1
(poly) Acrylonitrile	25	—	8.5	121	1
(poly) Ethylene (low-pressure process)	<10	30	8.0	156	1
Epoxy resin	26	30	7.9	129	1
Melamine resin	18	125	10.2	110	1
Melamine, molded (wood flour and mineral filled phenol-formaldehyde)	15	60	7.5	41	1
Melamine, molded (phenol-cellulose)	12	60	10.0	127	1
(poly) Methyl acrylate	21	30	9.4	269	2
(poly) Methyl acrylate, emulsion polymer	18	30	10.1	202	2
Phenolic resin	<10	15	9.3	129	1
	55		7.9	269	2
(poly) Propylene	25	30	8.4	101	1
Terpene-phenol resin	10	15	8.7	143	1
Urea-formaldehyde/ cellulose, molded	13	60	10.2	136	1
(poly) Vinyl acetate/ ethylene copolymer	32	30	8.6	119	1
(poly) Vinyl alcohol	26	60	8.9	128	1
(poly) Vinyl butyral	65	30	8.9	147	1
(poly) Vinyl chloride	107	200	7.6	46	1
(poly) Vinyl chloride/vinyl acetylene emulsion copolymer	35	60	8.2	95	1
(poly) Vinyl chloride/ ethylene/vinyl acetylene suspension copolymer	60	60	8.3	98	1

Annex G Calculation Method for Correction Factor Due to Increased Vent Panel Mass

This annex is not a part of the requirements of this NFPA document but is included for informational purposes only.

G.1 General. The following procedure can be used to assess the impact of the vent panel mass on P_{red}.

G.1.1 Introduction. The mass of vent panels is a factor that can limit the effectiveness of the venting process. To properly assess the influence panel mass contributes, other factors must also be considered, such as the reactivity of the dust, the enclosure volume and the number, shape, size, and type of deflagration vents utilized. The procedures for determining the effects of vent panel inertia on deflagration venting are presented in this section. The theoretical development uses mostly absolute pressures, instead of the gauge pressures used in the remainder of this document, and new pressure terms are defined. Pressures are used in bar, bar-abs, and pascals-abs; thus the reader is cautioned to note units of measure directly following each equation.

G.1.2 The reduced deflagration pressure is first calculated using Equation 8.2.2, based on low-mass vents. Corrections for vessel L/D and partial volume can then be added. This will be an iterative solution for the P_{red} resulting from the assumed vent area. Next, the correction factors for inertia effects are calculated.

G.1.3 The inertia of the panel can manifest itself in the following two ways:

(1) As a new factor in the effective vent relief pressure, p_{vi}, higher than the nominal static value, p_v
(2) As a higher reduced pressure, p_{ri}, after full vent deployment with respect to the p_{ri0} in the absence of inertia

The highest pressure during the vented deflagration can occur either at the point of vent relief or later after vent deployment. As inertia of the panel affects both pressures, both effects have to be calculated and the higher value, p_{vi} or p_{ri}, used as the reduced pressure produced in the vented deflagration.

G.1.3.1 The inertia correction is limited to the following:

(1) Vent panel density, $\sigma_v < 200$ kg/m^2
(2) Nominal static relief pressure, $p_v < 0.5$ bar

G.1.4 Both inertia effects are evaluated using two dimensionless parameters, Σ and Γ. However, one term in the parameters is different, that is, the dust reactivity. In the first case, the deflagration index, K_{St}, is used to determine $\Sigma_{K_{St}}$ and $\Gamma_{K_{St}}$. In the second case, the effective mixture reactivity, K, is used to determine Σ_K and Γ_K.

Copyright 2014 National Fire Protection Association (NFPA). Licensed, by agreement, for individual use and download on October 4, 2014 to LEADER and READER for designated user PATTARAPORN SRITRAKOOL. No other reproduction or transmission in any form permitted without written permission of NFPA. For inquires or to report unauthorized use, contact licensing@nfpa.org.

G.1.5 The deflagration index, K_{St}, of a dust is basically the maximum rate of pressure rise generated in a confined deflagration. The effective mixture reactivity is a parameter based on K_{St}, but it contains two corrections to account for the effects of the deflagration vent relief pressure and the volume of the protected enclosure. The vent relief pressure correction is the following:

$$K_{St,v} = K_{St} \cdot \left[1 + 1.75 \cdot \left(\frac{\Delta p_v}{p_0}\right)\right] \quad \textbf{(G.1.5a)}$$

where:
$K_{St,v}$ = deflagration index with vent relief pressure correction
K_{St} = deflagration index (bar-m/s)
Δp_v = vent relief pressure (bar) = P_{stat}
p_0 = initial pressure (bar-abs)

The volume correction for Equation G.1.5a is the following:

$$K = K_{St,v} \cdot \left(\frac{V}{10\ \text{m}^3}\right)^{0.11} \quad \textbf{(G.1.5b)}$$

where:
K = volume correction to deflagration index
V = enclosure volume (m^3)

This volume correction is applied only where the enclosure volume is greater than 10 m^3; otherwise $K = K_{St,v}$.

G.1.6 The shape factor for the vent(s) is as follows:

For square panels, $c_s = 1$.

For circular panels, $c_s = 0.886$.

For rectangular panels, apply the following equation:

$$c_s = \frac{1+\alpha}{2\sqrt{\alpha}} \quad \textbf{(G.1.6)}$$

where:
α = the ratio of the rectangle's smaller side to its longer side

G.1.7 Calculate $\Sigma_{K_{St}}$ and Σ_K using Equation G.1.7a and Equation G.1.7b:

$$\Sigma_{K_{St}} = \frac{\sigma_v}{\left(n^{1/2}\right)\cdot\left(c_s\right)\cdot\left(\alpha_{cd}^{1/2}\right)\cdot\left(p_0\right)\cdot\left(V^{1/3}\right)} \cdot \left(\frac{K_{St}}{\Delta p_m}\right)^{5/2} \quad \textbf{(G.1.7a)}$$

$$\Sigma_K = \frac{\sigma_v}{\left(n^{1/2}\right)\cdot\left(c_s\right)\cdot\left(\alpha_{cd}^{1/2}\right)\cdot\left(p_0\right)\cdot\left(V^{1/3}\right)} \cdot \left(\frac{K}{\Delta p_m}\right)^{5/2} \quad \textbf{(G.1.7b)}$$

where:
$\Sigma_{K_{St}}, \Sigma_K$ = dimensionless parameters
σ_v = vent panel density (kg/m^2)
n = number of equal-sized panels
c_s = shape factor
α_{cd} = constant = 232.5 m/s
P_0 = initial pressure (pascals absolute, N/m^2)
V = enclosure volume (m^3)
K_{St} = deflagration index (bar-m/s)
K = effective mixture reactivity (bar-m/s)
Δp_m = unvented pressure rise (bar) = $p_m - p_0$

G.1.7.1 For hinged vent closures, increase the value of vent panel density, σ_v, by 33 percent.

G.1.8 Calculate $\Gamma_{K_{St}}$ and Γ_K using Equation G.1.8a and Equation G.1.8b:

$$\Gamma_{K_{St}} = \alpha_{cd} \cdot \left(\frac{A_v}{V^{2/3}}\right) \cdot \left(\frac{\Delta p_m}{K_{St}}\right) \quad \textbf{(G.1.8a)}$$

$$\Gamma_K = \alpha_{cd} \cdot \left(\frac{A_v}{V^{2/3}}\right) \cdot \left(\frac{\Delta p_m}{K}\right) \quad \textbf{(G.1.8b)}$$

where:
$\Gamma_{K_{St}}, \Gamma_K$ = dimensionless parameters
A_v = vent area (m^2)

G.1.9 Calculate the pressure function, $f(P_v)$, using Equation G.1.9a and Equation G.1.9b:

$$P_v = \frac{p_v - p_0}{p_m - p_0} \quad \textbf{(G.1.9a)}$$

$$f\left(P_v\right) = \left(1000 \cdot P_v\right)^{0.5} \quad \textbf{(G.1.9b)}$$

where:
P_v = pressure ratio
p_v = vent panel static relief pressure (bar-abs)
p_0 = initial pressure (bar-abs)
p_m = unvented deflagration pressure (bar-abs)

G.1.10 Calculate the panel inertia parameter, η, using Equation G.1.10:

$$\eta = \frac{2}{3} - \frac{1}{60} \cdot \left\{max\left[1, f\left(P_v\right)\right] + 3.2 \cdot \left(\frac{m \cdot g \cdot \sigma_v}{p_v - p_0}\right) \cdot f\left(p_v\right)\right\} \quad \textbf{(G.1.10)}$$

where:
η = panel inertia parameter
m = vent gravity coefficient, assisting or slowing vent opening as defined in Table G.1.10
g = gravitational acceleration (m/s^2)
p_v = vent panel static relief pressure (pascals absolute, N/m^2)
p_0 = initial pressure (pascals absolute, N/m^2)

Table G.1.10 Value of Vent Gravity Coefficient

Panel Characteristics	Value of *m*
Horizontal panel, on top of the vessel	1
Other orientations	0

G.1.11 The new effective vent relief pressure with inertia can be determined as follows:

$$p_{vi} = p_v + 0.21 \cdot \left(\frac{\Sigma_{K_{St}}}{\Gamma_{K_{St}}^{1/2}}\right)^{\eta} \cdot \Delta p_m \quad \textbf{(G.1.11)}$$

where:
p_{vi} = effective vent relief pressure with inertia (bar-abs)
p_v = vent panel static relief pressure, $P_{stat} + 1$ (bar-abs)
Δp_m = unvented pressure rise (bar) = $p_m - p_O$

Copyright 2014 National Fire Protection Association (NFPA). Licensed, by agreement, for individual use and download on October 4, 2014 to LEADER and READER for designated user PATTARAPORN SRITRAKOOL. No other reproduction or transmission in any form permitted without written permission of NFPA. For inquires or to report unauthorized use, contact licensing@nfpa.org.

G.1.12 The new reduced pressure after full vent deployment can be determined as follows, depending on the value of Γ_K:

$$\begin{aligned}&\text{For } \Gamma_K \le 1; p_{ri} = p_{r0} + (p_m - p_0)\cdot(\Sigma_K)^{3/5}\cdot(0.26\cdot\Gamma_K)\\&\text{For } 1 < \Gamma_K < 3; p_{ri} = p_{r0} + (p_m - p_0)\cdot(\Sigma_K)^{3/5}\cdot\\&(0.26)\cdot(\Gamma_K - 3)\cdot(0.25 - 0.75\cdot\Gamma_K)\\&\text{For } \Gamma_K \ge 3; p_{ri} = p_{r0}\end{aligned} \qquad \textbf{(G.1.12)}$$

where:

p_{ri} = the reduced pressure developed with inertia (bar-abs)
p_{r0} = the reduced pressure developed with low-mass vents, $P_{red}+1$ (bar-abs)
p_m = unvented deflagration pressure, $P_{max}+1$ (bar-abs)
p_0 = initial pressure (bar-abs)

G.1.13 Compare the results obtained in Equations G.1.11 and G.1.12. The larger of the two results, p_{vi} or p_{ri}, represents the new maximum reduced deflagration pressure (in bar-abs) due to the vent panel inertia effect. The value of p_{vi} or p_{ri} must be converted to gauge pressure as P_{red} to iterate Equation 8.2.2. If the calculated pressure exceeds the enclosure strength, the user should repeat the calculation with a larger vent area.

G.2 Example Problem. Determine the maximum pressure developed by a deflagration when the conditions are as follows:

(1) V= 100 m^3 ($L/D \le 2$)
(2) K_{St} = 200 bar-m/s
(3) P_0 = 1 bar-abs
(4) P_{max} = 9 bar-abs
(5) σ = 24.4 kg/m^2
(6) n = 4 (equal square panels vertically mounted, not hinged)
(7) A_v = 6 m^2 (total for 4 vents)
(8) P_{stat} = 0.05 bar

The first step is to determine the reduced deflagration pressure developed if zero-mass vents were used.

From Equation 8.2.2, solve for Π:

$$A_{v0} = 1\cdot10^{-4}\cdot(1+1.54\cdot P_{stat}^{4/3})\cdot K_{St}\cdot V^{3/4}\cdot\sqrt{\frac{P_{max}}{P_{red}}-1}$$

Solve for Π:

$$\Pi = P_{red}/P_{max}$$

$$\Pi = \frac{1}{1+\left(\dfrac{A_{v0}}{1\cdot10^{-4}\cdot(1+1.54\cdot P_{stat}^{4/3})\cdot K_{St}\cdot V^{3/4}}\right)^2}$$

$$\Pi = \frac{1}{1+\left(\dfrac{6}{1\cdot10^{-4}\cdot\left(1+1.54\cdot(0.05)^{4/3}\right)\cdot(200)\cdot(100)^{3/4}}\right)^2} = 0.0116$$

The reduced pressure is then calculated by

$$P_{red} = \Delta p_m\cdot\Pi = (9-1)\cdot(0.0116) = 0.0928 \text{ bar}$$

To solve Equation G.1.11, first must be determined the values of $\Sigma_{K_{St}}$, $\Gamma_{K_{St}}$, and η:

$$\Sigma_{K_{St}} = \frac{\sigma_v}{\left(n^{1/2}\right)\cdot(c_s)\cdot\left(\alpha_{cd}^{1/2}\right)\cdot(p_0)\cdot\left(V^{1/3}\right)}\cdot\left(\frac{K_{St}}{\Delta p_m}\right)^{5/2} = \frac{24.4}{(2)\cdot(1)\cdot(15.25)\cdot(10^5)\cdot(4.64)}\cdot\left(\frac{200}{8}\right)^{5/2} = 0.0054$$

$$\Gamma_{K_{St}} = \alpha_{cd}\left(\frac{A_v}{V^{2/3}}\right)\cdot\left(\frac{\Delta p_m}{K_{St}}\right) = 232.5\cdot\frac{6}{21.54}\cdot\frac{8}{200} = 2.59$$

From Equation G.1.9a,

$$P_v = \frac{p_v - p_0}{p_m - p_0} = \frac{1.05-1}{9-1} = 0.00625$$

and from Equation G.1.9b,

$$f(P_v) = (1000\cdot P_v)^{0.5} = \sqrt{1000\cdot0.00625} = 2.5$$

$$\eta = \frac{2}{3} - \frac{1}{60}\cdot\left\{max\left[1, f(P_v)\right] + 3.2\cdot\left(\frac{m\cdot g\cdot\sigma_v}{P_v - P_0}\right)\cdot f(P_v)\right\} = \frac{2}{3} - \frac{1}{60}\cdot(2.5+0) = 0.625$$

Now Equation G.1.11 can be solved:

$$p_{vi} = p_v + 0.21\cdot\left(\frac{\Sigma_{K_{St}}}{\Gamma_{K_{St}}^{1/2}}\right)^{\eta}\cdot\Delta p_m$$

$$p_{vi} = (0.05+1) + 0.21\cdot\left(\frac{0.0054}{2.59^{1/2}}\right)^{0.625}\cdot(9-1) = 1.098 \text{ bar-abs}(0.098 \text{ bar})$$

To solve Equation G.1.12, the values of Σ_K and Γ_K first must be determined.

From Equation G.1.5a,

$$K_{St,v} = K_{St}\cdot\left[1+1.75\cdot\left(\frac{\Delta p_v}{p_0}\right)\right] = 200\cdot\left[1+1.75\cdot\left(\frac{0.05}{1}\right)\right] = 217.5$$

Copyright 2014 National Fire Protection Association (NFPA). Licensed, by agreement, for individual use and download on October 4, 2014 to LEADER and READER for designated user PATTARAPORN SRITRAKOOL. No other reproduction or transmission in any form permitted without written permission of NFPA. For inquires or to report unauthorized use, contact licensing@nfpa.org.

and from Equation G.1.5b,

$$K = K_{St,v} \cdot \left(\frac{V}{10\ \text{m}^3}\right)^{0.11}$$

$$= 217.5 \cdot \left(\frac{100}{10}\right)^{0.11} = 280.19$$

$$\Sigma_K = \frac{\sigma}{\left(n^{1/2}\right)\cdot\left(c_s\right)\cdot\left(\alpha_{cd}^{1/2}\right)\cdot\left(p_0\right)\cdot\left(V^{1/3}\right)} \cdot \left(\frac{K}{\Delta p_m}\right)^{5/2}$$

$$= \frac{24.4}{(2)\cdot(1)\cdot(15.25)\cdot\left(10^5\right)\cdot(4.64)} \cdot \left(\frac{280.19}{8}\right)^{5/2} = 0.0125$$

$$\Gamma_K = \alpha_{cd} \cdot \left(\frac{A_v}{V^{2/3}}\right)\cdot\left(\frac{\Delta p_m}{K}\right)$$

$$= 232.5 \cdot \left(\frac{6}{21.54}\right)\cdot\left(\frac{8}{280.19}\right) = 1.85$$

Now Equation G.1.12 can be solved:

$$p_{ri} = p_{rv} + \left(p_m - p_0\right)\cdot\left(\Sigma_K\right)^{3/5}\cdot(0.26)\cdot\left(\Gamma_K - 3\right)\cdot\left(-0.75\Gamma_K + 0.25\right)$$

for $1<\Gamma_K<3$:

$$p_{ri} = (0.0928+1) + (9-1)\cdot(0.0125)^{3/5}\cdot(0.26)\cdot(1.85-3)\cdot$$
$$\left(0.25-(0.75\cdot1.85)\right)$$
$$p_{ri} = 1.289\ \text{bar-abs}\ (0.289\ \text{bar})$$

The new pressure due to panel inertia is the larger of the figures determined in Equations G.1.11 and G.1.12. In this example, Equation G.1.12 produced the larger pressure; therefore the new pressure due to panel inertia is 0.289 bar.

Annex H Research Reports and Supporting Documents

This annex is not a part of the requirements of this NFPA document but is included for informational purposes only.

H.1 General. The new equations for Chapter 8 have been developed using material based on the following research conducted by Factory Mutual Research Corporation.

H.1.1 Generalized Vent Correlation Equation. Tamanini, F. 1998. "The Use of Models in the Development of Explosion Protection Guidelines." *Proc. 9th Int'l Symp. Loss Prevention and Safety Promotion in the Process Industries*, May 4–8, Barcelona, Spain.

Tamanini, F., and J. Valiulis. 1996. "Improved Guidelines for the Sizing of Vents in Dust Explosions." *Journal of Loss Prevention in the Process Industries*, 9(1):105–118.

Tamanini, F., and J. Valiulis. 1998. "Dust Explosion Vent Sizing Technology Implemented by Factory Mutual Loss Prevention Consultants Worldwide." 1st Internet Conference on Process Safety, January 27–29.

Ural, E. A. 2001. "A Simplified Development of a Unified Dust Explosion Vent Sizing Formula." *Proc. 35th Annual Loss Prevention Symp.*, American Institute of Chemical Engineers, Houston, TX, April 22–26.

Ural, E. A. 1989. "Simplified Analytical Model of Vented Explosions." Published as Appendix C in FMRC Report J. I. 0Q2E2.RK — Large Scale Vented Dust Explosions, Effect of Turbulence on Explosion Severity, Tamanini and Chafee, Factory Mutual Research Corporation.

H.1.2 Effect of Vent Ducts on Vent Area. Tamanini, F. 1995. "An Improved Correlation of Experimental Data on the Effects of Ducts in Vented Dust Explosions," *Proc. 8th Int'l Symp. Loss Prevention & Safety Promotion in the Process Industries*, Vol. 1, Antwerp: June 6–9.

Ural, E. A. 1993. "A Simplified Method for Predicting the Effect of Ducts Connected to Explosion Vents." *J. Loss Prevention in the Process Industries* 6(1):3–10.

H.1.3 Partial Volume Deflagration. Tamanini, F. 1996. "Vent Sizing in Partial-Volume Deflagrations and Its Application to the Case of Spray Dryers." *J. Loss Prevention in the Process Industries* 9(5):339–350.

H.1.4 Vent Panel Inertia Effect. Tamanini, F. 1998. "Disclosure of FMRC Method for Panel Inertia Effects in Dust Explosions." *FMRC Research*, July 30.

Tamanini, F. 1996. "Modeling of Panel Inertia Effects in Vented Dust Explosions." *Process Safety Progress* 15(4):247–257, Winter.

Annex I Effect of Partial Volumes on Buildings — Example Problem

This annex is not a part of the requirements of this NFPA document but is included for informational purposes only.

I.1 Introduction. NFPA 654, *Standard for the Prevention of Fire and Dust Explosions from the Manufacturing, Processing, and Handling of Combustible Particulate Solids*, applies the layer thickness criterion over 5 percent of the floor area. To be more conservative, this standard has chosen to apply the layer thickness criterion of 1/32 in. over 100 percent of the floor area and over other surfaces defined in Step 1 *(see I.2.1)*.

I.2 Building Example. Thin layers of coal dust are known to form on the floor of a coal-fired powerhouse with a 20 m × 30 m floor area and a 4 m ceiling height. Deflagration vents for an end wall installation are to be designed for a P_{red} of 1 psi gauge pressure and a P_{stat} of 0.50 psi gauge pressure.

I.2.1 Step 1. Four samples from areas measuring 4 ft^2 (0.37 m^2) are collected and weighed, with an average mass of 148 g.

I.2.2 Step 2. Inspection of the other exposed surfaces in the powerhouse reveals that there are deposits on the top surface of ceiling beams. Two samples taken from areas measuring 4 ft^2 (0.37 m^2) have an average mass of 100 g. The beam top flange surface area is 215 ft^2 (20 m^2).

I.2.3 Step 3. The mass of coal dust in the coal conveyors is estimated to be 20 kg (1 percent of the total mass of coal). Although there is also a coal bunker in the powerhouse, it is assumed not to contribute to any building deflagration, because it is vented through the building roof.

I.2.4 Step 4. Testing the samples resulted in a worst-case P_{max} of 91.7 psi gauge pressure, a worst-case K_{St} of 80 bar-m/s, and a worst-case c_w of 500 g/m^3.

I.2.5 Step 5. Using the P_{red} of 1 psi gauge pressure = 0.0689 bar and P_{max} of 91.7 psi gauge pressure, $\prod$ = 0.011. Using a vent panel with a P_{stat} of 0.50 psi gauge pressure = 0.0345 bar:

$$A_{v0} = 1\cdot10^{-4}\cdot\left[1+1.54\cdot(0.0345)^{4/3}\right]$$
$$\cdot80\cdot\left[(30)\cdot(20)\cdot(4)\right]^{3/4}\cdot\sqrt{\frac{1}{0.011}-1}$$

$A_{v0} = 26\ \text{m}^2$, for a single vent

Copyright 2014 National Fire Protection Association (NFPA). Licensed, by agreement, for individual use and download on October 4, 2014 to LEADER and READER for designated user PATTARAPORN SRITRAKOOL. No other reproduction or transmission in any form permitted without written permission of NFPA. For inquires or to report unauthorized use, contact licensing@nfpa.org.

I.2.6 Step 6. The building shape is generally elongated. The cross section is 20 m × 4 m, resulting in an effective area of 80 m^2. The hydraulic diameter as determined in Chapter 6 is

$$D_{he} = \frac{4 \cdot A_{eff}}{p} = \frac{4(20 \cdot 4)}{(20 + 20 + 4 + 4)} = 6.67 \text{ m}$$

If all vent area is provided as a single vent, the position of the vent along the 30 m length of the building changes the effective *L/D* of the enclosure. If *L/D* is greater than 2, additional vent area is needed. Assuming venting on one end wall, the *L/D* would be

$$\frac{L}{D} = \frac{30}{6.67} = 4.5$$

An alternative approach, described in Chapter 6, would be to distribute the vents along the 30 m length of the building, determine the effective volume, V_{eff}, and maximum flame length, *H*, for each section, then size the vents for each section independently.

Adjusting the vent area for *L/D* greater than 2,

$$A_{v1} = 26\left\{1 + 0.6 \cdot (4.5 - 2)^{0.75} \cdot \exp\left[-0.95 \cdot (0.0689)^2\right]\right\}$$

$$A_{v1} = 57 \text{ m}^2$$

I.2.7 Step 7. For buildings, the vent area is increased by a factor of 1.7:

$$A_{v2} = (57) \cdot (1.7)$$

$$A_{v2} = 97 \text{ m}^2$$

I.2.8 Step 8. If vent panels are too heavy, an inertia correction would be applied. Panel density is assumed to be 8 lb/ft^2 = 39.1 kg/m^2 for a wall panel with pull-through fasteners. This panel density is compared to a limit of 40 kg/m^2 and the threshold value as determined in Chapter 8:

$$M_T = \left\{\frac{(6.67) \cdot (0.0689)^{0.2} \cdot (1)^{0.3} \cdot [30 \cdot 20 \cdot 4]}{80^{0.5}}\right\}^{1.67}$$

$$M_T = 110{,}700 \text{ kg/m}^2$$

Because the threshold value exceeds 40 kg/m^2 and the assumed panel density is less than 40 kg/m^2, no inertia correction is required:

$$A_{v3} = 97 \text{ m}^2$$

I.2.9 Step 9. The building partial volume is determined:

$$X_r = \frac{148}{0.37 \cdot 500 \cdot 4} + \frac{100 \cdot 20}{0.37 \cdot 500 \cdot 2400} + \frac{20 \cdot 1000}{500 \cdot 2400}$$

$$= 0.20 + 0.0045 + 0.0167$$

$$= 0.22$$

I.2.10 Step 10. The final vent area is reduced by the partial volume correction:

$$A_{v4} = 97 \cdot (0.22)^{-1/3} \cdot \sqrt{\frac{0.22 - 0.011}{1 - 0.011}}$$

$$A_{v4} = 74 \text{ m}^2$$

This area is less than the area of the end wall, matching the assumption that all venting could be on one end wall.

The designer should be aware that wall area obstructed by structural members is not available for venting.

Annex J Bibliography

This annex is not a part of the requirements of this NFPA document but is included for informational purposes only.

J.1 The following sources are referenced in text by numbers in brackets corresponding to the numbers listed here.

(1) Jacobson, M., Cooper, A. R., and Nagy, J., Explosibility of Metal Powders, Report of Investigations 6516, U.S. Bureau of Mines, Pittsburgh, 1964.

(2) Ballal, D. R., and Lefebure, A. H., "Ignition and Flame Quenching of Quiescent Fuel Mists," *Proceedings of the Royal Society*, London, Vol. 364, 1978, pp. 277–294.

(3) Bartknecht, W., *Explosions: Course, Prevention, Protection*, Springer-Verlag, New York, 1981, p. 28.

(4) Ibid, p. 51.

(5) Ibid, p. 50.

(6) Field, P., "Dust Explosions," *Handbook of Powder Technology*, Vol. 4, Elsevier Scientific Publishing Co., New York, 1982, pp. 88–90.

(7) Haase, H., *Electrostatic Hazards: Their Evaluation and Control*, Verlag Chemie, New York, 1977.

(8) Harmanny, A., "Duration of vented dust explosions," *Europex Newsletter*, Vol. 23, pp. 5–9, 1993.

(9) Harrison, A. J., and Eyre, J. A., "The Effect of Obstacle Arrays on the Combustion of Large Premixed Gas/Air Clouds," *Combustion Science and Technology*, 52: 1987, pp. 121–137.

(10) Hjertager, B. H., Fuhre, K., and Bjorkhaug, M., "Concentration effects on flame acceleration by obstacles in large-scale methane-air and propane-air vented explosions," *Combustion Science and Technology*, 62, 1988, ppp. 239–256.

(11) Calcote, H. F., Gregory, C. A. Jr., Barrett, C. M., and Gilmer, R. B.,"Spark Ignition, Effect of Molecular Structure," *Industrial and Engineering Chemistry*, Vol. 44, 1952, p. 2659.

(12) Jacobson, Cooper, and Nagy, op. cit.

(13) Nagy, J., Dorsett, H. G. Jr., and Cooper, A. R., Explosibility of Carbonaceous Dusts, Report of Investigations 6597, U.S. Bureau of Mines, Pittsburgh, 1965.

(14) Dorsett, H. G. Jr., and Nagy, J., Dust Explosibility of Chemicals, Drugs, Dyes, and Pesticides, Report of Investigations 7132, U.S. Bureau of Mines, Pittsburgh, 1968.

(15) International Bureau for Explosion Protection and Plant Safety (INBUREX), PCVENT, Version 1.2, March 30, 1993.

(16) Jacobson, M., Nagy, J., Cooper, A. R., and Ball, F. J., Explosibility of Agricultural Dusts, Report of Investigations 5753, U.S. Bureau of Mines, Pittsburgh, 1961.

(17) Jacobson, M., Nagy, J., and Cooper, A. R., Explosibility of Dusts Used in the Plastics Industry, Report of Investigations 5971, U.S. Bureau of Mines, Pittsburgh, 1962.

(18) Eckhoff, R., "Toward Absolute Minimum Ignition Energies for Dust Clouds?," *Combustion and Flame*, Vol. 24, Elsevier Scientific Publishing Co., New York, 1975, pp. 53–64.

Copyright 2014 National Fire Protection Association (NFPA). Licensed, by agreement, for individual use and download on October 4, 2014 to LEADER and READER for designated user PATTARAPORN SRITRAKOOL. No other reproduction or transmission in any form permitted without written permission of NFPA. For inquires or to report unauthorized use, contact licensing@nfpa.org.

(19) Fenning, R. W., "Gaseous Combustion at Medium Pressures," Phil. Trans. Royal Society, London, Serial A, Vol. 225, 1926.
(20) Nagy, J., Seiler, E. C., Conn, J. W., and Verakis, H. C., Explosion Development in Closed Vessels, Report of Investigations 7507, U.S. Bureau of Mines, Pittsburgh, 1971.
(21) Nagy, J., and Verakis, H. C., *Development and Control of Dust Explosions*, Marcel Dekker, New York, 1983.
(22) Hartmann, I., and Nagy, J., Effect of Relief Vents on Reduction of Pressures Developed by Dust Explosions, Report of Investigations 3924, U.S. Bureau of Mines, Pittsburgh, 1946.
(23) Howard, W. B., "Interpretation of a Building Explosion Accident," *Loss Prevention*, Vol. 6, American Institute of Chemical Engineers, New York, 1972, pp. 68–73.
(24) Runes, E., "Explosion Venting," *Loss Prevention: Proceedings of the 6th Symposium on Loss Prevention in the Chemical Industry*, AIChE, New York, 1972, pp. 63–67.
(25) Rust, E. A., "Explosion Venting for Low-Pressure Equipment," *Chemical Engineering*, McGraw-Hill Co., New York, Nov. 5, 1979, pp. 102–110.
(26) Swift, I., "Venting Deflagrations — Theory and Practice," *Plant/Operations Progress*, Vol. 3, No. 2, American Institute of Chemical Engineers, New York, April 1984, pp. 89–93.
(27) Yao, C., "Explosion Venting of Low-Strength Equipment and Structures," *Loss Prevention*, Vol. 8; American Institute of Chemical Engineers, New York, 1974, p. 109.
(28) Swift, I., and Epstein, M., "Performance of Low Pressure Explosion Vents," Paper 84d, 20th Annual Loss Prevention Symposium, AIChE Spring National Meeting, New Orleans, LA, April 6–10, 1986.
(29) Benson, R. S., and Burgoyne, J. H., British Shipbuilding Research Assn., Report No. 76, 1951.
(30) Howard, W. B., and Karabinis, A. H., "Tests of Explosion Venting of Buildings," *Plant/Operations Progress*, Vol. 1, American Institute of Chemical Engineers, New York, January 1982, pp. 51–68.
(31) Zalosh, R. G., "Gas Explosion Tests in Room-Size Vented Enclosures," *Loss Prevention*, Vol. 13, American Institute of Chemical Engineers, New York, 1980.
(32) *Kommitten fur Explosions Forsok*, Bromma 1957, Slutrapport, Stockholm, April 1958.
(33) Tonkin, P. S., and Berlemont, C. F. J., "Dust Explosions in a Large-Scale Cyclone Plant," Fire Research Note No. 942, Fire Research Station, Borehamwood, UK, July 1972.
(34) Sapko, M. J., Furno, A. L., and Kuchta, J. M., Flame and Pressure Development of Large-Scale CH_4-Air-N_2 Explosions, Report of Investigations 8176, U.S. Bureau of Mines, Pittsburgh, PA, 1976.
(35) Harris, G. F. P., and Briscoe, P. G., "The Venting of Pentane Vapor-Air Explosions in a Large Vessel," *Combustion and Flame*, Vol. 11, Aug. 1967, pp. 329–388.
(36) Cubbage, P. A., and Simmonds, W. A., "An Investigation of Explosion Reliefs for Industrial Drying Ovens," Gas Council Res. (London) Communications GC23, 1955.
(37) Thorne, P. F., Rogowski, Z. W., and Field, P., "Performance of Low Inertia Explosion Reliefs Fitted to a 22 m^3 Cubical Chamber," 4th Int'l Symp. on Loss Prevention and Safety Promotion in the Process Industries, EFCE Publication Series, No. 33, Vol. 3, F1-F10, Sept. 12–16, 1983.
(38) van Wingerden, C. J. M., and Zeeuwen, J. P., "Venting of Gas Explosions in Large Rooms," 4th Int'l Symp. on Loss Prevention and Safety Promotion in the Process Industries, EFCE Publication Series, No. 33, Vol. 3, F38–F47, Sept. 12–16, 1983.
(39) Yao, C., deRis, J., Bajpai, S. N., and Buckley, J. L., "Evaluation of Protection from Explosion Overpressure in AEC Gloveboxes," Factory Mutual Research Corporation, Norwood, MA, FMRC Report 16215.1, Dec. 1969.
(40) Burgoyne, J. H., and Wilson, M. J. G., "The Relief of Pentane Vapor-Air Explosions in Vessels," Symp. on Chemical Process Hazards, IChemE, London, 1960, p. 25.
(41) Lunn, G. A., and Cairns, F., "The Venting of Dust Explosions in a Dust Collector," *J. Hazardous Materials*, Vol. 12, 1985, pp. 85–107.
(42) Zalosh, R. G., and Coll, J. P., "Explosion Venting Test Program for Municipal Solid Waste Shredders," presented at 1981 Annual Meeting of Society of Fire Protection Engineers, SFPE Seminar on Engineering Fire Safe Conservation and Resource Recovery, Dallas, Texas, May 18–21, 1981.
(43) Cooper, M. G., Fairweather, M., and Tite, J. P., "On the Mechanisms of Pressure Generation in Vented Explosions," *Combustion and Flame*, 65, pp. 1–14, 1986.
(44) Solberg, D. M., Pappas, J. A., and Skramstad, E., "Observations of Flame Instabilities in Large-Scale Vented Gas Explosions," 18th Symposium (Int'l) on Combustion, Combustion Institute, 1981, pp. 1607–1614.
(45) van Wingerden, C. J. M., and Zeeuwen, J. P., "Flame Instabilities in Vented Gas Explosions," *Combustion and Flame*, 51, 1983, pp. 109–111.
(46) Faber, M., "Recoil Forces of Vented Explosions in Technical Installations," *Europex Newsletter*, Dec. 1991, pp. 2–3.
(47) Donat, C., "Application of Explosion Pressure Relief as a Protective Measure for Industrial Plant Equipment," *Loss Prevention*, Vol. 11, American Institute of Chemical Engineers, New York, 1977.
(48) Donat, C., "Release of the Pressure of an Explosion with Rupture Discs and Explosion Valves," ACHEMA 73, Frankfurt am Main, Republic of Germany, 1973.
(49) Donat, C., *Staub-Reinhaltung der Luft*, Vol. 31, No. 4, April 1971, pp. 154–160.
(50) Bartknecht, W., and Kuhner, G., *Forschungsbericht* 45, Bundesinstitut fur Arbeitsschutz, 1971.
(51) Bartknecht, W., *Explosions: Course, Prevention, Protection*, Springer-Verlag, New York, 1981.
(52) Pineau, J., Giltaire, M., and Dangreaux, J., "Etude d'explosions de poussieres en recipients de 1, 10 et 100 m^3," Note No. 1005-83-76, Cahier de Notes Documentaires, No. 83, 2nd Trimestre, 1976.
(53) Simpson, L. L., "Equations for the VDI and Bartknecht Nomograms," *Plant/Operation Progress*, Vol. 5, No. 1, American Institute of Chemical Engineers, New York, Jan. 1986, pp. 49–51.
(54) Siwek, R., and Skov, O., *Verein Deutsche Ingenieure Berichte*, No. 701, Vol. 2, 1988, pp. 569–616, (Düsseldorf, VDI-Verlag).
(55) Lee, J. H. S., and Guirao, C. M., "Pressure Development in Closed and Vented Vessels," *Plant/Operations Progress*, Vol. 1, No. 2, American Institute of Chemical Engineers, April 1982, pp. 75–85.
(56) Bartknecht, W., op. cit., pp. 18–23 and 124.
(57) Ibid, pp. 7–26.
(58) Ibid, p. 111.
(59) Cousins, E. W., and Cotton, P. E., "The Protection of Closed Vessels Against Internal Explosions," American Society of Mechanical Engineers, Paper No. 51-PRI-2, 1951.

Copyright 2014 National Fire Protection Association (NFPA). Licensed, by agreement, for individual use and download on October 4, 2014 to LEADER and READER for designated user PATTARAPORN SRITRAKOOL. No other reproduction or transmission in any form permitted without written permission of NFPA. For inquires or to report unauthorized use, contact licensing@nfpa.org.

(60) Maisey, H. R., "Gaseous and Dust Explosion Venting," *Chemical and Process Engineering*, Vol. 46, Oct. 1965.
(61) Chippett, S., "An Investigation of Vented Explosions at Initially Elevated Pressures for Propane/Air Flames," Report of Research Project conducted for NFPA Committee on Explosion Protection Systems, Feb. 2, 1984.
(62) Burgoyne, J. H., and Cohen, L., "The Effect of Drop Size on Flame Propagation in Liquid Aerosols," *Proceedings of the Royal Society*, London ser. A, Vol. 225, 1954, pp. 375–392.
(63) Browning, J. A., Tyler, T. L., and Drall, W. G., "Effect of Particle Size on Combustion of Uniform Suspension," *Industrial and Engineering Chemistry*, Vol. 49, 1957, pp. 142–148.
(64) Vincent, G. C., and Howard, W. B., "Hydrocarbon Mist Explosions — Part I: Prevention by Explosion Suppression," *Loss Prevention*, Vol. 10, American Institute of Chemical Engineers, New York, 1976, pp. 43–47.
(65) Zabetakis, M., Flammability Characteristics of Combustible Gases and Vapors, Bulletin 627, U.S. Bureau of Mines, Pittsburgh, 1965, pp. 6–7.
(66) VDI Richtlinie 3673, Pressure Release of Dust Explosions, Verein Deutscher Ingenieure-Kommission Reinhaltung der Luft, Düsseldorf, 1979 and 1983, VDI Verlag GmbH, Düsseldorf.
(67) Schwab, R. F., private communication.
(68) Rasbash, D. J., and Rogowski, Z. W., "Gaseous Explosions in Vented Ducts," *Combustion and Flame*, Vol. 4, No. 4, Dec. 1960, Butterworth, London, pp. 301–312.
(69) Rasbash, D. J., and Rogowski, Z. W., "Relief of Explosions in Propane/Air Mixtures Moving in a Straight Unobstructed Duct," Second Symposium on Chemical Process Hazards with Special Reference to Plant Design, Institution of Chemical Engineers, London, 1963.
(70) Palmer, K. N., "Relief Venting of Dust Explosions in Process Plant," Symposium on Major Loss Prevention in the Process Industries, IChemE Symposium Series No. 34, Institution of Chemical Engineers, London, 1971.
(71) Palmer, K. N., *Dust Explosions and Fires*, Chapman and Hall, London, 1973.
(72) "Guide to the Use of Flame Arrestors and Explosion Reliefs," Ministry of Labour, New Series No. 34, Her Majesty's Stationery Office, London, 1965.
(73) Pineau, J., and Ronchail, G., "Propagation of Dust Explosions in Ducts," *Proceedings of the Symposium on the Control and Prevention of Dust Explosions*, Basel, 1982.
(74) Matsuda, T., Toyonaga, K., Nozima, Y., Kobayashi, M., and Shimizu, T.,"Some Observations on Dust Explosibility in a Pneumatic Transport System," *Journal of Powder and Bulk Solids Technology*, Vol. 6, No. 4, 1982, pp. 22–28.
(75) Bjorklund, R. A., and Ryason, P. R., *Detonation Flame Arrestor Devices for Gasoline Cargo Vapor Recovery Systems*, Publication 80–18, Jet Propulsion Laboratories, Pasadena, CA, 1980.
(76) Palmer, K. N., "Explosion Protection of a Dust Extraction System," Institution of Chemical Engineers, Symposium Series 39, April 1974.
(77) Britton, L. G., and Chippett, S., "Practical Aspects of Dust Deflagration Testing," Paper 58d, 17th Annual Loss Prevention Symposium, American Institute of Chemical Engineers, Houston, March 24–28, 1985.
(78) Swift, I., "Gaseous Combustion Venting — A Simplified Approach," The Institution of Chemical Engineers Symposium Series 82, 4th International Symposium on Loss Prevention and Safety Promotion in the Process Industries, Vol. 3 — Chemical Process Hazards (1983).
(79) Chippett, S., "Modeling Vented Explosions," *Combustion and Flame*, Elsevier Scientific Publishing Co., Volume 55, No. 1 (1984).
(80) Swift, I., "Developments in Dust Explosibility Testing: The Effect of Test Variables," *Proceedings of the International Specialists Meeting on Fuel-Air Explosions*, McGill University, Montreal, Nov. 4–6 (1981), edited by J. H. S. Lee and C. M. Guirao, University of Waterloo Press, 1982.
(81) Cocks, R. E., and Meyer, R. C., "Fabrication and Use of a 20 Liter Spherical Dust Testing Apparatus," *Loss Prevention*, Vol. 14, American Institute of Chemical Engineers, 1981.
(82) NACA Report 1300, National Advisory Committee on Aeronautics, 1959, Tables 31 and 32.
(83) Perry, R. H., and Chilton, C. H. (Eds.), *Chemical Engineers' Handbook*, 5th Edition, McGraw-Hill, New York, 1973.
(84) Andrews, G. E., and Bradley, D., "Determination of Burning Velocities: A Critical Review," *Combustion and Flame*, Vol. 18, Elsevier Scientific Publishing Co., New York, 1972, pp. 133–153.
(85) France, D. H., and Pritchard, R., "Burning Velocity Measurements of Multicomponent Fuel Gas Mixtures," *Gas Warme International*, Vol. 26, No. 12, 1977.
(86) Forschungsbericht Staubexplosionen: Brenn- und Explosions-Kenngrossen von Stauben, Hauptverband der gewerblichen Berufsgenossenschaften e.V., Bonn, 1980.
(87) Zalosh, R. G., and Coll, J. P., "Explosion Venting Test Program for Municipal Solid Waste Shredders," SFPE Technology Report 81-9, Society of Fire Protection Engineers, Boston, April 1981.
(88) Bartknecht, W., "Pressure Venting of Dust Explosions in Large Vessels," Paper 82f, 20th Annual Loss Prevention Symposium, AIChE Spring National Meeting, New Orleans, April 6–10, 1986.
(89) Bartknecht, W., "Effectiveness of Explosion Venting as a Protective Measure for Silos," *Plant/Operation Progress*, Vol. 4, No. 1, American Institute of Chemical Engineers, New York, Jan. 1985, pp. 4–13.
(90) Britton, L. G., "Measurement of Minimum Ignition Energy for Safety Application," Paper 70f, 25th Annual Loss Prevention Symposium, AIChE Summer National Meeting, Pittsburgh, PA, August 19–22, 1991.
(91) Howard, W. B., private communication.
(92) Britton, L.G., "Using Material Data in Static Hazard Assessment," *Plant/Operations Progress*, Vol. 11, No. 2, April 1992.
(93) Lunn, G. A., *Guide to Dust Explosion Prevention and Protection, Part 3 — Venting of Weak Explosions and the Effects of Vent Ducts*, The Institution of Chemical Engineers, British Materials Handling Board, London, England, 1988.
(94) Bartknecht, W., *Dust Explosions, Course, Prevention, Protection*, Springer-Verlag, Berlin, 1989.
(95) DeGood, R., and Chatrathi, K., "Comparative Analysis of Test Work Studying Factors Influencing Pressures Developed in Vented Deflagration," *Journal of Loss Prevention Process Industries*, Vol 4, Oct. 1991.
(96) ASTM E 1226-88, *Standard Test Method for Pressure and Rate of Pressure Rise for Combustible Dusts.*
(97) Cashdollar, K. L., and Chatrathi, K., "Minimum Explosible Dust Concentrations Measured in 20-L and 1-m^3 Chambers," *Combustion Science and Technology*, 1992, Vol. 87, pp. 157–171.

Copyright 2014 National Fire Protection Association (NFPA). Licensed, by agreement, for individual use and download on October 4, 2014 to LEADER and READER for designated user PATTARAPORN SRITRAKOOL. No other reproduction or transmission in any form permitted without written permission of NFPA. For inquires or to report unauthorized use, contact licensing@nfpa.org.

(98) Cashdollar, K. L., and Hertzberg, M. (Editors), *Industrial Dust Explosions*, ASTM Publications STP 958, 1987.
(99) Bartknecht, W., *Dust Explosions: Course, Prevention, Protection*, Springer-Verlag, Berlin, 1989.
(100) Eckhoff, R. K., *Dust Explosions in the Process Industries*, Butterworth-Heinemann, Oxford, 1991.
(101) Bartknecht, W., "Explosions-Schutz: Grundlagen und Anwendung," Springer-Verlag, Berlin, 1993. (German only.)
(102) Zalosh, R. G., and Chaffee, J. L., "Partial Volume and Wall Effects in Vented Gas Explosions," Canadian Conference on Chemical Engr, July 1990.
(103) Taminini, F., and Chaffee, J. L., "Turbulent Vented Gas Explosions with and Without Acoustically Induced Instabilities," *Proceedings, Twenty-Fourth International Symposium on Combustion*, The Combustion Institute, 1992, pp. 1845–51.
(104) VDI 3673, "Pressure Venting of Dust Explosions," *Verein Deutscher Ingenieure*, Kommission Reinhaltung der Luft, Düsseldorf, VDI Verlag GmbH, Düsseldorf, 1995.
(105) Vogl, A., "The Course of Dust Explosions in Pipes of Pneumatic Systems," Symposium "Esplosioni da polveri: valutazione, prevenzione e protezione," San Donato Milanese, Milan, Italy, June 28, 1995.
(106) Proust, Ch., "Dust Explosions in Pipes: A Review," *Journal of Loss Prevention Process Industries*, Elsevier Science Ltd., Great Britain, U.K., Vol. 9, No. 4, 1996, pp. 267–277.
(107) Siwek, R., and Scov, O., "Model Calculation for Determining the Dimensions of Hinged Vents on the Basis of Realistic Explosion Tests" (Modellberechnung zur Dimensionierung von Explosionsklappen auf der Basis von praxisnahen Explosionsversuchen), VDI Berichte, No. 701, 1988, pp. 569–616.
(108) Crowhurst, D., Colwell, S. A., and Hoare, D. P., "The External Explosion Characteristics of Vented Dust Explosions," IChemE Symposium Series, No. 139, 1995.
(109) Cashdollar, K. L., and Hertzberg, M., "Laboratory Study of Rock Dust Inerting Requirements: Effects of Coal Volatility, Particle Size and Methane Addition," 23rd International Conference of Safety in Mines Research Institutes, Washington, D.C., Sept. 1989.
(110) Loss Prevention Data Sheet 7–76, Section 3.1.5, *Prevention and Mitigation of Combustible Dust Explosions and Fires*, FM Global, Norwood, MA, May 2009.
(111) Lunn, G.A., P. Holbrow, and D. E. Brookes. 1999. *The Effects of Bursting Discs on the Reduced Pressure from Vented Dust Explosions*, TD/99/04.
(112) Holbrow, P., Hawksworth, S., Tyldesley, A., Thermal Radiation from Vented Dust Explosions, *Journal of Loss Prevention in the Process Industries*, Volume 13, No. 6, pp. 467–476.
(113) "NFPA 68 Impulse Task Force Report to the Committee on Explosion Protection Systems, Sept. 15, 1999."
(114) Ural, E. A., "Dust Explosion Venting Through Ducts," *Proceedings 39th Annual Loss Prevention Symposium*, American Institute of Chemical Engineers, Atlanta, April 10–14, 2005.
(115) Health and Safety Laboratory, Harpur Hill, Bruxton, UK, final report, "Effect of Deflector Plates on Vented Dust Explosions," EC/98/29, dated 20 November, 1998.
(116) Forcier, T., and. Zalosh, R., "External Pressures Generated by Vented Gas and Dust Explosions," *J. of Loss Prevention in the Process Industries*, Vol. 13, 2000, pp. 411–417.
(117) Communication from D. Herrmann to Committee on Explosion Protection Systems, May 2005.
(118) Task Group report, "Zalosh — Larger Vent Area Option 3, Draft 2."
(119) Zalosh, R. G., "New Dust Explosion Venting Design Requirements for Turbulent Operating Conditions," presented at 6th International Symposium on the Prevention and Mitigation of Industrial Explosions, Halifax, Nova Scotia, August 2006.
(120) VDI 2263 Blatt 8.1, *Staubbrände und Staubexplosionen; Gefahren, Beurteilung, Schutzmaßnahmen; Brand- und Explosionschutz an Elevatoren (Dust Fires and Dust Explosions; Hazards, Assessment, Protective Measures; Fire and Explosion Protection on Elevators)*. Verein Deutscher Ingenieure, Berlin: Beuth Verlag, 2011.
(121) Holbrow, P., Lunn, G.A., and Tyldesley, A., "Explosion venting of bucket elevators," *Journal of Loss Prevention in the Process Industries*, Vol. 15, No. 5, 2002.
(122) Britton, L.G., "Using Heats of Oxidation to Evaluate Flammability Hazards," *Process Safety Progress*, Vol. 21, No. 1, 2000, pp. 1–24.

Annex K Informational References

K.1 Referenced Publications. The documents or portions thereof listed in this annex are referenced within the informational sections of this standard and are not part of the requirements of this document unless also listed in Chapter 2 for other reasons.

K.1.1 NFPA Publications. National Fire Protection Association, 1 Batterymarch Park, Quincy, MA 02169-7471.

NFPA 30, *Flammable and Combustible Liquids Code*, 2012 edition.

NFPA 30B, *Code for the Manufacture and Storage of Aerosol Products*, 2011 edition.

NFPA 33, *Standard for Spray Application Using Flammable or Combustible Materials*, 2011 edition.

NFPA 35, *Standard for the Manufacture of Organic Coatings*, 2011 edition.

NFPA 52, *Vehicular Gaseous Fuel Systems Code*, 2013 edition.

NFPA 61, *Standard for the Prevention of Fires and Dust Explosions in Agricultural and Food Processing Facilities*, 2013 edition.

NFPA 69, *Standard on Explosion Prevention Systems*, 2008 edition.

NFPA 400, *Hazardous Materials Code*, 2013 edition.

NFPA 484, *Standard for Combustible Metals*, 2012 edition.

NFPA 654, *Standard for the Prevention of Fire and Dust Explosions from the Manufacturing, Processing, and Handling of Combustible Particulate Solids*, 2013 edition.

NFPA 750, *Standard on Water Mist Fire Protection Systems*, 2010 edition.

NFPA 5000®, *Building Construction and Safety Code®*, 2012 edition.

Fire Protection Guide to Hazardous Materials, 2001 edition.

K.1.2 Other Publications.

K.1.2.1 ANSI Publications. American National Standards Institute, Inc., 25 West 43rd Street, 4th Floor, New York, NY 10036.

ANSI Z535, *Product Safety Signs and Labels,* 1998.

K.1.2.2 API Publications. American Petroleum Institute, 1220 L. Street, N.W., Washington, DC 20005-4070.

API 752, *Management of Hazards Associated with Location of Process Plant Buildings*, 2003.

Copyright 2014 National Fire Protection Association (NFPA). Licensed, by agreement, for individual use and download on October 4, 2014 to LEADER and READER for designated user PATTARAPORN SRITRAKOOL. No other reproduction or transmission in any form permitted without written permission of NFPA. For inquires or to report unauthorized use, contact licensing@nfpa.org.

K.1.2.3 ASCE Publications. American Society of Civil Engineers, 1801 Alexander Bell Drive, Reston, VA 20191–4400.

ASCE, *Design of Blast-Resistant Buildings in Petrochemical Facilities*, 2010.

ASCE/SEI 7, *Minimum Design Loads for Buildings and Other Structures*, 2010.

K.1.2.4 ASTM Publications. ASTM International, 100 Barr Harbor Drive, P.O. Box C700, West Conshohocken, PA 19428-2959.

ASTM D 5680a, *Standard Practice for Sampling Unconsolidated Solids in Drums or Similar Containers,* 2001.

ASTM E 502, *Standard Test Method for Selection and Use of ASTM Standards for the Determination of Flash Point of Chemicals by Closed Cup Methods,* 2000.

ASTM E 582, *Standard Test Method for Minimum Ignition Energy and Quenching Distance in Gaseous Mixtures,* 2004.

ASTM E 681, *Standard Test Method for Concentration Limits of Flammability of Chemicals (Vapors and Gases),* 2004.

ASTM E 1226, *Standard Test Method for Explosibility of Dust Clouds*, 2010.

ASTM E 1515, *Standard Test Method for Minimum Explosible Concentration of Combustible Dusts*, 1998.

ASTM E 2019, *Standard Test Method for Minimum Ignition Energy of a Dust Cloud in Air,* 2003.

K.1.2.5 CCPS Publications. Center for Chemical Process Safety, 3 Park Avenue, 19th Floor, New York, NY 10016.

Guidelines for Safe Handling of Powders and Bulk Solids, 2004.

K.1.2.6 ISO Publications. International Organization for Standardization, 1, rue de Varembé, Case postale 56, CH-1211 Geneve 20, Switzerland.

ISO 6184/1, *Explosion Protection Systems — Part 1: Determination of Explosion Indices of Combustible Dust in Air,* 1985.

K.1.2.7 NACE Publications. NACE International, 1440 South Creek Drive, Houston, TX 77084-4906.

National Association of Corrosion Engineers Handbook, 2nd edition, 1991.

K.1.2.8 U.S. Government Publications. U.S. Government Printing Office, Washington, DC 20402.

TM5-1300, *Structures to Resist the Effects of Accidental Explosions,* Department of Defense Explosives Safety Board, 1990.

K.1.2.9 Other Publications. Biggs, J. M., *Introduction to Structural Dynamics*, New York: McGraw-Hill, 1964.

Darby, R., *Chemical Engineering Fluid Mechanics*, 2nd Edition, New York: Marcel Dekker, 2001.

Holbrow, P., S. Andrews, and G. A. Lunn, "Dust explosions in interconnected vented vessels," *Journal of Loss Prevention in the Process Industries*, Vol. 9, No. 1, pp. 91–103 (1996).

Holbrow, P., G. A. Lunn, and A. Tyldesley, "Dust explosion protection in linked vessels: Guidance for containment and venting," *Journal of Loss Prevention in the Process Industries*, Vol. 12, No. 3, pp. 227–234 (1999).

Krishna, K., W., Rogers, and M. Sam Mannan, "The use of aerosol formation, flammability, and explosion information for heat-transfer fluid selection," *Journal of Hazardous Materials* 104, 2003.

Lees, F. P., *Lees' Loss Prevention in the Process Industries,* 2nd Edition, Oxford, U.K.: Butterworth–Heinemann, 1996.

Lunn, G. A., P. Holbrow, S. Andrews, and J. Gummer, "Dust Explosions in Totally Closed Interconnected Vessels," *Journal of Loss Prevention in the Process Industries*, Vol. 9, No. 1, pp. 45–58 (1996).

Moore, P. E., and J. A. Senecal, "Industrial Explosion Protection — How Safe Is Your Process?" Dust Explosion Symposium, Fire Protection Research Foundation, Baltimore, MD, May 13–14, 2009. See http:www.nfpa.org/assets/files/PDF/Foundation%20proceedings/Industrial_Explosion_Protection.pdf.

Roser, M., "Investigation of dust explosion phenomenon in interconnected process vessels," Forschungsgesellschaft fur angewandle Systemsicherheit und Arbeitsmedizin PhD Thesis, University of Loughborough.

Roser, M., A. Vogel, S. Radant, W. Malalasekera, and R. Parkin, "Investigations of flame front propagation between interconnected process vessels. Development of a new flame front propagation time prediction model," *Journal of Loss Prevention in the Process Industries*, Vol. 12, Issue 5, pp. 421–436 (1999).

Yu, X., and Young, K.-J., The Dynamic Load Factor of Pressure Vessels in Deflagration Events.

K.2 Informational References. (Reserved)

K.3 References for Extracts in Informational Sections. (Reserved)

Copyright 2014 National Fire Protection Association (NFPA). Licensed, by agreement, for individual use and download on October 4, 2014 to LEADER and READER for designated user PATTARAPORN SRITRAKOOL. No other reproduction or transmission in any form permitted without written permission of NFPA. For inquires or to report unauthorized use, contact licensing@nfpa.org.

Index

Copyright © 2013 National Fire Protection Association. All Rights Reserved.

The copyright in this index is separate and distinct from the copyright in the document that it indexes. The licensing provisions set forth for the document are not applicable to this index. This index may not be reproduced in whole or in part by any means without the express written permission of NFPA.

-A-

Administration ..... Chap. 1
Application 1.3, A.1.3
Conversion Factors 1.6
Equivalency 1.4
Pressure 1.8
Purpose 1.2, A.1.2
Retroactivity 1.5
Scope 1.1, A.1.1
Symbols 1.7
Approved
Definition 3.2.1, A.3.2.1
Authority Having Jurisdiction (AHJ)
Definition 3.2.2, A.3.2.2

-B-

Bibliography ..... Annex J
Burning Velocity
Definition 3.3.1
Fundamental Burning Velocity
Definition 3.3.1.1

-C-

Calculation Method for Correction Factor Due to Increased Vent Panel Mass ..... Annex G
Combustible Dust
Definition 3.3.2
Combustion
Definition 3.3.3

-D-

Definitions ..... Chap. 3
Deflagration
Definition 3.3.4
Deflagration Characteristics of Select Combustible Dusts ..... Annex F
Deflagration Characteristics of Select Flammable Gases ..... Annex D
Deflagration Index
Definition 3.3.5
Details of Deflagration Vents and Vent Closures ..... Chap. 10
Equipment Vent Closures 10.5
Hinged Devices 10.5.1, A.10.5.1
Rupture Diaphragm Devices 10.5.2, A.10.5.2
Normally Closed Vents 10.2
Normally Open Vents 10.1, A.10.1
Hangar-Type Doors 10.1.2
Louvered Openings 10.1.1
Restraints for Large Panels 10.4, A.10.4
Types of Building or Room Vent Closures 10.3
Hinged Doors, Windows, and Panel Closures 10.3.1
Shear and Pull-Through Fasteners 10.3.2, A.10.3.2
Detonation
Definition 3.3.6
Dust Systems with a Flow Velocity of 2 m/s or Less 9.2.10.2.2

-E-

Effect of Partial Volumes on Buildings — Example Problem ..... Annex I
Enclosure
Definition 3.3.7, A.3.3.7
Equivalent Diameter
Definition 3.3.8
Estimating Fundamental Burning Velocity ..... Annex E
Explanatory Material ..... Annex A
Explosible
Definition 3.3.9
Explosion
Definition 3.3.10

-F-

Flame Speed
Definition 3.3.11, A.3.3.11
Flammable Gas Systems with a Flow Velocity of 2 m/s or Less 9.2.10.2.1
Flammable Limits
Definition 3.3.12
Lower Flammable Limit (LFL)
Definition 3.3.12.1, A.3.3.12.1
Upper Flammable Limit (UFL)
Definition 3.3.12.2
Flammable Range
Definition 3.3.13
Flash Point
Definition 3.3.14, A.3.3.14
Friction Factor, f_D
Definition 3.3.15, A.3.3.15
Fundamental Burning Velocity
Definition 3.3.16
Fundamentals of Deflagration ..... Annex B
Fundamentals of Venting of Deflagrations ..... Chap. 6
Basic Concepts 6.1, A.6.1
Consequences of a Deflagration 6.6, A.6.6
Effects of Vent Discharge Ducts 6.8
Effects of Vent Inertia 6.7
Enclosure Design and Support 6.3
Enclosure Design Pressure Selection Criteria 6.3.1
Enclosure Support Criteria 6.3.5
Relieving Walls or Roof 6.3.4
Enclosure Length-to-Diameter Ratio and Vent Variables 6.4, A.6.4
L/D of Elongated Enclosures 6.4.3, A.6.4.3
Mixtures 6.2
Dust Mixtures 6.2.2
Foams of Combustible Liquids 6.2.4, A.6.2.4
Gas Mixtures 6.2.1
Hybrid Mixtures 6.2.3, A.6.2.3
Vent Closure Operation 6.5
Venting with Flame Arresting and Particulate Retention 6.9, A.6.9
Limitations 6.9.4, A.6.9.4

-G-

Gas
Definition 3.3.17
General Requirements ..... Chap. 4
Compliance Options 4.3
Options 4.3.1
Performance-Based Design 4.3.2
Prescriptive-Based Design 4.3.3

Copyright 2014 National Fire Protection Association (NFPA). Licensed, by agreement, for individual use and download on October 4, 2014 to LEADER and READER for designated user PATTARAPORN SRITRAKOOL. No other reproduction or transmission in any form permitted without written permission of NFPA. For inquires or to report unauthorized use, contact licensing@nfpa.org.

Goal 4.1
Objectives 4.2
Hazard Analysis 4.2.3
Life Safety 4.2.1
Property Protection 4.2.2
Guidelines for Measuring Deflagration Parameters of Dusts ..... Annex C

-H-

Hydraulic Diameter
Definition 3.3.18, A.3.3.18

-I-

Informational References ..... Annex K
Inspection and Maintenance ..... Chap. 11
Design Parameters and Documentation 11.2, A.11.2
Employee Training 11.11
General 11.1
Inspection 11.4, A.11.4
Inspection Reports 11.7
Installation 11.3
Maintenance 11.10
Management of Change 11.9
Procedures Following Vent Closure Actuation 11.5
Recordkeeping 11.8
Vent Closure Design Parameters 11.6, A.11.6

-K-

K_G
Definition 3.3.19, A.3.3.19
K_{St}
Definition 3.3.20, A.3.3.20

-L-

Labeled
Definition 3.2.3
Listed
Definition 3.2.4, A.3.2.4

-M-

Maximum Pressure ***(P_{max})***
Definition 3.3.21
Minimum Explosible Concentration (MEC)
Definition 3.3.22
Minimum Ignition Energy (MIE)
Definition 3.3.23, A.3.3.23
Mist
Definition 3.3.24
Mixture
Definition 3.3.25
Hybrid Mixture
Definition 3.3.25.1, A.3.3.25.1
Optimum Mixture
Definition 3.3.25.2, A.3.3.25.2
Stoichiometric Mixture
Definition 3.3.25.3

-O-

Oxidant
Definition 3.3.26, A.3.3.26

-P-

Performance-Based Design Option ..... Chap. 5
General Requirements 5.1
Design Documentation 5.1.2
Maintenance of Design Features 5.1.3
Qualifications 5.1.1, A.5.1.1
Performance Criteria 5.2
Deflagration Vent Discharge 5.2.3
Inspection and Maintenance 5.2.4
Pressure
Definition 3.3.27
Maximum Pressure (P_{max})
Definition 3.3.27.1
Reduced Pressure (P_{red})
Definition 3.3.27.2
Static Activation Pressure (P_{stat})
Definition 3.3.27.3

-R-

Rate of Pressure Rise ***(dP/dt)***
Definition 3.3.28
Maximum Rate of Pressure Rise $[(dP/dt)_{max}]$
Definition 3.3.28.1, A.3.3.28.1
Reduced Pressure ***(P_{red})***
Definition 3.3.29
Referenced Publications ..... Chap. 2
General 2.1
NFPA Publications 2.2
Other Publications 2.3
References for Extracts in Mandatory Sections 2.4
Replacement-in-Kind
Definition 3.3.30
Research Reports and Supporting Documents ..... Annex H

-S-

Shall
Definition 3.2.5
Should
Definition 3.2.6
Standard
Definition 3.2.7
Static Activation Pressure ***(P_{stat})***
Definition 3.3.31
Strength
Definition 3.3.32
Enclosure Strength (P_{es})
Definition 3.3.32.1
Ultimate Strength
Definition 3.3.32.2

-V-

Vapor
Definition 3.3.33
Vent
Definition 3.3.34
Hinge Vent
Definition 3.3.34.1, A.3.3.34.1
Translating Vent
Definition 3.3.34.2, A.3.3.34.2
Vent Closure
Definition 3.3.35
Venting Deflagrations of Gas Mixtures and Mists ..... Chap. 7
Deflagration Venting of Enclosures Interconnected with Pipelines 7.8
Effects of Initial Elevated Pressure 7.5
Effects of Panel Inertia 7.3
Effects of Vent Ducts 7.4, A.7.4
Fireball Dimensions 7.7, A.7.7
Introduction 7.1
Vent Design 7.6
Venting by Means of Low Inertia Vent Closures 7.2
Calculation of Internal Surface Area 7.2.5, A.7.2.5
Determination of Turbulent Flame Enhancement Factor, λ 7.2.6, A.7.2.6
Methods to Reduce Flame Enhancement 7.2.6.9
Partial Volume Effects 7.2.7

Copyright 2014 National Fire Protection Association (NFPA). Licensed, by agreement, for individual use and download on October 4, 2014 to LEADER and READER for designated user PATTARAPORN SRITRAKOOL. No other reproduction or transmission in any form permitted without written permission of NFPA. For inquires or to report unauthorized use, contact licensing@nfpa.org.

Venting of Deflagrations of Dusts and Hybrid Mixtures ..... Chap. 8
Bins, Hoppers, and Silos 8.6
Bucket Elevators 8.8
Additional Casing Vents 8.8.3
Head and Boot Vents 8.8.2, A.8.8.2
Deflagration Venting of Enclosures Interconnected with Pipelines 8.12, A.8.12
Effects of Initially Elevated or Subatmospheric Pressure 8.4
Effects of Partial Volume 8.3, A.8.3
Building Partial Volumes 8.3.4
Process Equipment Partial Volumes 8.3.3, A.8.3.3
Effects of Vent Ducts 8.5, A.8.5
Fireball Dimensions 8.9, A.8.9
Introduction 8.1
Venting by Means of Low-Inertia Vent Closures 8.2
Effects of Panel Inertia 8.2.6, A.8.2.6
Venting Internal to a Building with Flame-Arresting and Particulate Retention Device 8.10, A.8.10
Venting of Dust Collectors Using Bags, Filters, or Cartridges 8.7
Venting Silos or Other Storage Vessel Provided with Integral Bin Vents 8.11, A.8.11
Venting of Deflagrations of Gases and Dusts in Pipes and Ducts Operating at or Near Atmospheric Pressure ..... Chap. 9
Design 9.2, A.9.2
Transition to Detonation 9.2.9
Use of a Single Deflagration Vent on a Pipe or Duct 9.2.10
Introduction 9.1, A.9.1
Multiple Deflagration Vents on a Pipe or Duct 9.3

Copyright 2014 National Fire Protection Association (NFPA). Licensed, by agreement, for individual use and download on October 4, 2014 to LEADER and READER for designated user PATTARAPORN SRITRAKOOL. No other reproduction or transmission in any form permitted without written permission of NFPA. For inquires or to report unauthorized use, contact licensing@nfpa.org.

Sequence of Events Leading to Issuance of This NFPA Committee Document

Step 1: Call for Proposals

- Proposed new Document or new edition of an existing Document is entered into one of two yearly revision cycles, and a Call for Proposals is published.

Step 2: Report on Proposals (ROP)

- Committee meets to act on Proposals, to develop its own Proposals, and to prepare its Report.
- Committee votes by written ballot on Proposals. If two-thirds approve, Report goes forward. Lacking two-thirds approval, Report returns to Committee.
- Report on Proposals (ROP) is published for public review and comment.

Step 3: Report on Comments (ROC)

- Committee meets to act on Public Comments to develop its own Comments, and to prepare its report.
- Committee votes by written ballot on Comments. If two-thirds approve, Report goes forward. Lacking two-thirds approval, Report returns to Committee.
- Report on Comments (ROC) is published for public review.

Step 4: Technical Report Session

- "*Notices of intent to make a motion*" are filed, are reviewed, and valid motions are certified for presentation at the Technical Report Session. ("Consent Documents" that have no certified motions bypass the Technical Report Session and proceed to the Standards Council for issuance.)
- NFPA membership meets each June at the Annual Meeting Technical Report Session and acts on Technical Committee Reports (ROP and ROC) for Documents with "certified amending motions."
- Committee(s) vote on any amendments to Report approved at NFPA Annual Membership Meeting.

Step 5: Standards Council Issuance

- Notification of intent to file an appeal to the Standards Council on Association action must be filed within 20 days of the NFPA Annual Membership Meeting.
- Standards Council decides, based on all evidence, whether or not to issue Document or to take other action, including hearing any appeals.

Committee Membership Classifications

The following classifications apply to Technical Committee members and represent their principal interest in the activity of the committee.

M *Manufacturer:* A representative of a maker or marketer of a product, assembly, or system, or portion thereof, that is affected by the standard.

U *User:* A representative of an entity that is subject to the provisions of the standard or that voluntarily uses the standard.

I/M *Installer/Maintainer:* A representative of an entity that is in the business of installing or maintaining a product, assembly, or system affected by the standard.

L *Labor:* A labor representative or employee concerned with safety in the workplace.

R/T *Applied Research/Testing Laboratory:* A representative of an independent testing laboratory or independent applied research organization that promulgates and/or enforces standards.

E *Enforcing Authority:* A representative of an agency or an organization that promulgates and/or enforces standards.

I *Insurance:* A representative of an insurance company, broker, agent, bureau, or inspection agency.

C *Consumer:* A person who is, or represents, the ultimate purchaser of a product, system, or service affected by the standard, but who is not included in the *User* classification.

SE *Special Expert:* A person not representing any of the previous classifications, but who has a special expertise in the scope of the standard or portion thereof.

NOTES:
1. "Standard" connotes code, standard, recommended practice, or guide.
2. A representative includes an employee.
3. While these classifications will be used by the Standards Council to achieve a balance for Technical Committees, the Standards Council may determine that new classifications of members or unique interests need representation in order to foster the best possible committee deliberations on any project. In this connection, the Standards Council may make appointments as it deems appropriate in the public interest, such as the classification of "Utilities" in the National Electrical Code Committee.
4. Representatives of subsidiaries of any group are generally considered to have the same classification as the parent organization.

Copyright 2014 National Fire Protection Association (NFPA). Licensed, by agreement, for individual use and download on October 4, 2014 to LEADER and READER for designated user PATTARAPORN SRITRAKOOL. No other reproduction or transmission in any form permitted without written permission of NFPA. For inquires or to report unauthorized use, contact licensing@nfpa.org.

Submitting Public Input / Public Comment through the Electronic Submission System (e-Submission):

As soon as the current edition is published, a Standard is open for Public Input.

Before accessing the e-Submission System, you must first sign-in at www.NFPA.org. *Note: You will be asked to sign-in or create a free online account with NFPA before using this system*:

a. Click in the gray Sign In box on the upper left side of the page. Once signed-in, you will see a red "Welcome" message in the top right corner.
b. Under the Codes and Standards heading, Click on the Document Information pages (List of Codes & Standards), and then select your document from the list or use one of the search features in the upper right gray box.

OR

a. Go directly to your specific document page by typing the convenient short link of www.nfpa.org/document#, (Example: NFPA 921 would be www.nfpa.org/921) Click in the gray Sign In box on the upper left side of the page. Once signed in, you will see a red "Welcome" message in the top right corner.

To begin your Public Input, select the link The next edition of this standard is now open for Public Input (formally "proposals") located on the Document Information tab, the Next Edition tab, or the right-hand Navigation bar. Alternatively, the Next Edition tab includes a link to Submit Public Input online

At this point, the NFPA Standards Development Site will open showing details for the document you have selected. This "Document Home" page site includes an explanatory introduction, information on the current document phase and closing date, a left-hand navigation panel that includes useful links, a document Table of Contents, and icons at the top you can click for Help when using the site. The Help icons and navigation panel will be visible except when you are actually in the process of creating a Public Input.

Once the First Draft Report becomes available there is a Public comment period during which anyone may submit a Public Comment on the First Draft. Any objections or further related changes to the content of the First Draft must be submitted at the Comment stage.

To submit a Public Comment you may access the e-Submission System utilizing the same steps as previous explained for the submission of Public Input.

For further information on submitting public input and public comments, go to: http://www.nfpa.org/publicinput

Other Resources available on the Doc Info Pages

Document information tab: Research current and previous edition information on a Standard

Next edition tab: Follow the committee's progress in the processing of a Standard in its next revision cycle.

Technical committee tab: View current committee member rosters or apply to a committee

Technical questions tab: For members and Public Sector Officials/AHJs to submit questions about codes and standards to NFPA staff. Our Technical Questions Service provides a convenient way to receive timely and consistent technical assistance when you need to know more about NFPA codes and standards relevant to your work. Responses are provided by NFPA staff on an informal basis.

Products/training tab: List of NFPA's publications and training available for purchase.

Community tab: Information and discussions about a Standard

Copyright 2014 National Fire Protection Association (NFPA). Licensed, by agreement, for individual use and download on October 4, 2014 to LEADER and READER for designated user PATTARAPORN SRITRAKOOL. No other reproduction or transmission in any form permitted without written permission of NFPA. For inquires or to report unauthorized use, contact licensing@nfpa.org.

Information on the NFPA Standards Development Process

I. Applicable Regulations. The primary rules governing the processing of NFPA standards (codes, standards, recommended practices, and guides) are the NFPA *Regulations Governing the Development of NFPA Standards (Regs)*. Other applicable rules include NFPA *Bylaws*, NFPA *Technical Meeting Convention Rules*, NFPA *Guide for the Conduct of Participants in the NFPA Standards Development Process*, and the NFPA *Regulations Governing Petitions to the Board of Directors from Decisions of the Standards Council*. Most of these rules and regulations are contained in the *NFPA Standards Directory*. For copies of the *Directory*, contact Codes and Standards Administration at NFPA Headquarters; all these documents are also available on the NFPA website at "www.nfpa.org."

The following is general information on the NFPA process. All participants, however, should refer to the actual rules and regulations for a full understanding of this process and for the criteria that govern participation.

II. Technical Committee Report. The Technical Committee Report is defined as "the Report of the responsible Committee(s), in accordance with the Regulations, in preparation of a new or revised NFPA Standard." The Technical Committee Report is in two parts and consists of the First Draft Report and the Second Draft Report. (See *Regs* at 1.4)

III. Step 1: First Draft Report. The First Draft Report is defined as "Part one of the Technical Committee Report, which documents the Input Stage." The First Draft Report consists of the First Draft, Public Input, Committee Input, Committee and Correlating Committee Statements, Correlating Input, Correlating Notes, and Ballot Statements. (See *Regs* at 4.2.5.2 and Section 4.3) Any objection to an action in the First Draft Report must be raised through the filing of an appropriate Comment for consideration in the Second Draft Report or the objection will be considered resolved. [See *Regs* at 4.3.1(b)]

IV. Step 2: Second Draft Report. The Second Draft Report is defined as "Part two of the Technical Committee Report, which documents the Comment Stage." The Second Draft Report consists of the Second Draft, Public Comments with corresponding Committee Actions and Committee Statements, Correlating Notes and their respective Committee Statements, Committee Comments, Correlating Revisions, and Ballot Statements. (See *Regs* at Section 4.2.5.2 and 4.4) The First Draft Report and the Second Draft Report together constitute the Technical Committee Report. Any outstanding objection following the Second Draft Report must be raised through an appropriate Amending Motion at the Association Technical Meeting or the objection will be considered resolved. [See *Regs* at 4.4.1(b)]

V. Step 3a: Action at Association Technical Meeting. Following the publication of the Second Draft Report, there is a period during which those wishing to make proper Amending Motions on the Technical Committee Reports must signal their intention by submitting a Notice of Intent to Make a Motion. (See *Regs* at 4.5.2) Standards that receive notice of proper Amending Motions (Certified Amending Motions) will be presented for action at the annual June Association Technical Meeting. At the meeting, the NFPA membership can consider and act on these Certified Amending Motions as well as Follow-up Amending Motions, that is, motions that become necessary as a result of a previous successful Amending Motion. (See 4.5.3.2 through 4.5.3.6 and Table1, Columns 1-3 of *Regs* for a summary of the available Amending Motions and who may make them.) Any outstanding objection following action at an Association Technical Meeting (and any further Technical Committee consideration following successful Amending Motions, see *Regs* at 4.5.3.7 through 4.6.5.3) must be raised through an appeal to the Standards Council or it will be considered to be resolved.

VI. Step 3b: Documents Forwarded Directly to the Council. Where no Notice of Intent to Make a Motion (NITMAM) is received and certified in accordance with the Technical Meeting Convention Rules, the standard is forwarded directly to the Standards Council for action on issuance. Objections are deemed to be resolved for these documents. (See *Regs* at 4.5.2.5)

VII. Step 4a: Council Appeals. Anyone can appeal to the Standards Council concerning procedural or substantive matters related to the development, content, or issuance of any document of the Association or on matters within the purview of the authority of the Council, as established by the *Bylaws* and as determined by the Board of Directors. Such appeals must be in written form and filed with the Secretary of the Standards Council (See *Regs* at 1.6). Time constraints for filing an appeal must be in accordance with 1.6.2 of the *Regs*. Objections are deemed to be resolved if not pursued at this level.

VIII. Step 4b: Document Issuance. The Standards Council is the issuer of all documents (see Article 8 of *Bylaws*). The Council acts on the issuance of a document presented for action at an Association Technical Meeting within 75 days from the date of the recommendation from the Association Technical Meeting, unless this period is extended by the Council (See *Regs at* 4.7.2). For documents forwarded directly to the Standards Council, the Council acts on the issuance of the document at its next scheduled meeting, or at such other meeting as the Council may determine (See *Regs* at 4.5.2.5 and 4.7.4).

IX. Petitions to the Board of Directors. The Standards Council has been delegated the responsibility for the administration of the codes and standards development process and the issuance of documents. However, where extraordinary circumstances requiring the intervention of the Board of Directors exist, the Board of Directors may take any action necessary to fulfill its obligations to preserve the integrity of the codes and standards development process and to protect the interests of the Association. The rules for petitioning the Board of Directors can be found in the *Regulations Governing Petitions to the Board of Directors from Decisions of the Standards Council* and in 1.7 of the *Regs*.

X. For More Information. The program for the Association Technical Meeting (as well as the NFPA website as information becomes available) should be consulted for the date on which each report scheduled for consideration at the meeting will be presented. For copies of the First Draft Report and Second Draft Report as well as more information on NFPA rules and for up-to-date information on schedules and deadlines for processing NFPA documents, check the NFPA website (www.nfpa.org/aboutthecodes) or contact NFPA Codes & Standards Administration at (617) 984-7246.

Copyright 2014 National Fire Protection Association (NFPA). Licensed, by agreement, for individual use and download on October 4, 2014 to LEADER and READER for designated user PATTARAPORN SRITRAKOOL. No other reproduction or transmission in any form permitted without written permission of NFPA. For inquires or to report unauthorized use, contact licensing@nfpa.org.

Stay Up-To-Date. Join NFPA® Today!

☑ **YES** Please enroll me as a member of NFPA for the term checked below. Activate all benefits, and ship my *Member Kit* including the *Benefits Guide* and other resources to help me make the most of my NPFA membership.

Please allow three to four weeks for the kit to arrive.

Billing Information:

Name _____ Title _____

Organization _____

Address _____

City _____ State _____ Zip/Postal Code _____

Country _____

Phone _____ E-mail _____

Priority Code: 8J-MIS-1Z

Please Answer The Following Questions:

Job Title *(check one)*

- ❑ Architect, Engineer, Consultant, Contractor (C17)
- ❑ Facilities Safety Officer (F14)
- ❑ Fire Chief, Other Fire Service (A11)
- ❑ Loss Control, Risk Manager (L11)
- ❑ Inspector, Building Official, Fire Marshal (F03)
- ❑ Owner, President, Manager, Administrator (C10)
- ❑ Other (please specify): (G11)_____

Type of Organization *(check one)*

- ❑ Architecture, Engineering, Contracting (A14)
- ❑ Commercial Firm (Office, Retail, Lodging, Restaurant) (G13)
- ❑ Electrical Services, Installation (J11)
- ❑ Fire Service, Public and Private (AA1)
- ❑ Government (C12)
- ❑ Industrial Firm (Factory, Warehouse) (C11)
- ❑ Institutional (Health Care, Education, Detention, Museums) (B11)
- ❑ Insurance, Risk Management (B12)
- ❑ Utilities (G12)
- ❑ Other (please specify): (G11)_____

4 Easy Ways to Join

Fax: 1-800-593-6372, Outside the U.S. +1-508-895-8301
Mail: NFPA Membership Services Center,
11 Tracy Drive, Avon, MA 02322-9908
Online: nfpa.org
Call: 1-800-344-3555
Outside the U.S. call +1-617-770-3000

12/12-D

Terms and Payment:

- ❑ 1 year ($165)
- ❑ 2 years ($300) SAVE $30
- ❑ 3 years ($430) SAVE $65

Annual membership dues include a $45 subscription to *NFPA Journal*®. Regular membership in NFPA is individual and non-transferable. NFPA Journal is a registered trademark of the National Fire Protection Association, Quincy, MA 02169. Voting privileges begin after 180 days of individual membership. Prices subject to change.

Payment Method:

Check One:

- ❑ Payment Enclosed *(Make check payable to NFPA.)*
- ❑ Purchase Order *(Please attach this form to your P.O.)*
- ❑ Bill Me Later *(Not available on International memberships.)*

Charge My: ❑ VISA ❑ MasterCard ❑ AmEx ❑ Discover

Card #_____

Expiration Date _____

Name on Card _____

Signature _____

International members: Please note prepayment is required on all International orders. Be sure to enclose a check or select your preferred credit card option.

100% Money-Back Guarantee

If anytime during your first year you decide membership is not for you, let us know and you'll receive a 100% refund of your dues.

Copyright 2014 National Fire Protection Association (NFPA). Licensed, by agreement, for individual use and download on October 4, 2014 to LEADER and READER for designated user PATTARAPORN SRITRAKOOL. No other reproduction or transmission in any form permitted without written permission of NFPA. For inquires or to report unauthorized use, contact licensing@nfpa.org.

"Member-Only" Benefits
Keeps You Up-To-Date!

FREE! Technical Support — Technical Support by Phone/Email. Get fast, reliable answers to all code-related questions—from electrical safety for employee workplaces to carbon dioxide extinguishing systems—from NFPA's team of fire protection specialists.

NFPA Journal® — THE journal of record for fire protection, this bi-monthly publication will keep you abreast of the latest fire prevention and safety practices, as well as new technologies and strategies for protecting life and property from fire.

NFPA Update — This easy-to-read monthly e-newsletter will keep you up-to-date on important association programs such as the annual meeting; bring you times of interest from NFPA's regional offices; and alert you to nationwide events and opportunities you won't want to miss.

NFPA News — From new standards for dry cleaning plants to warning equipment for household carbon monoxide, this monthly online update keeps you abreast of additions of changes that could impact how you do you work.

NFPA Standards Directory — The NFPA Standards Directory is your complete guide to NFPA's code-making process. Simply access your online NFPA member profile for document revision guidelines, the revision cycle schedule, and forms for submitting Proposals and Comments. Your online NFPA member profile and access to the NFPA Standards Directory is automatically generated once you join NFPA.

FREE! Section Membership — Share YOUR expertise with others in any of 16 industry-specific sections covering your own field of interest.

Member Kit — Includes Membership Certificate, Pin, Decals, ID Card, and Camera-ready Logo Art. Display the NFPA member logo proudly on your business correspondence, literature, website, and vehicles.

10% Discounts — Save hundreds of dollars each year on the many products and services listed in the NFPA Catalog, including codes and standards publications, handbooks, training videos, and other education materials to increase your knowledge and skills.

Voting Rights — Your chance to help shape the future direction of fire prevention codes and standards. Voting rights go into effect 180 days from the start of individual membership.

Conference Invitation— Invitation to the NFPA Conference and Expo. Attend this important meeting at discounted rates as a member of NFPA.

Join NFPA today!
www.nfpa.org

NFPA® and *NFPA Journal*® are registered trademarks of the National Fire Protection Association, Quincy, MA 02169-7471