Copyright 2014 National Fire Protection Association (NFPA). Licensed, by agreement, for individual use and download on October 4, 2014 to LEADER and READER for designated user PATTARAPORN SRITRAKOOL. No other reproduction or transmission in any form permitted without written permission of NFPA. For inquires or to report unauthorized use, contact licensing@nfpa.org.

NFPA® 664

Standard for the Prevention of Fires and Explosions in Wood Processing and Woodworking Facilities

2012 Edition



NFPA, 1 Batterymarch Park, Quincy, MA 02169-7471
An International Codes and Standards Organization

Become a Member
Subscribe to the NATIONAL FIRE CODES SUBSCRIPTION SERVICE
Register for Seminars, Webinars, and Online Courses
Visit the NFPA Catalog

Copyright 2014 National Fire Protection Association (NFPA). Licensed, by agreement, for individual use and download on October 4, 2014 to LEADER and READER for designated user PATTARAPORN SRITRAKOOL. No other reproduction or transmission in any form permitted without written permission of NFPA. For inquires or to report unauthorized use, contact licensing@nfpa.org.

IMPORTANT NOTICES AND DISCLAIMERS CONCERNING NFPA® DOCUMENTS
NOTICE AND DISCLAIMER OF LIABILITY CONCERNING THE USE OF NFPA DOCUMENTS

NFPA® codes, standards, recommended practices, and guides ("NFPA Documents"), of which the document contained herein is one, are developed through a consensus standards development process approved by the American National Standards Institute. This process brings together volunteers representing varied viewpoints and interests to achieve consensus on fire and other safety issues. While the NFPA administers the process and establishes rules to promote fairness in the development of consensus, it does not independently test, evaluate, or verify the accuracy of any information or the soundness of any judgments contained in NFPA Documents.

The NFPA disclaims liability for any personal injury, property or other damages of any nature whatsoever, whether special, indirect, consequential or compensatory, directly or indirectly resulting from the publication, use of, or reliance on NFPA Documents. The NFPA also makes no guaranty or warranty as to the accuracy or completeness of any information published herein.

In issuing and making NFPA Documents available, the NFPA is not undertaking to render professional or other services for or on behalf of any person or entity. Nor is the NFPA undertaking to perform any duty owed by any person or entity to someone else. Anyone using this document should rely on his or her own independent judgment or, as appropriate, seek the advice of a competent professional in determining the exercise of reasonable care in any given circumstances.

The NFPA has no power, nor does it undertake, to police or enforce compliance with the contents of NFPA Documents. Nor does the NFPA list, certify, test, or inspect products, designs, or installations for compliance with this document. Any certification or other statement of compliance with the requirements of this document shall not be attributable to the NFPA and is solely the responsibility of the certifier or maker of the statement.

ISBN: 978-145590118-0 (Print)
ISBN: 978-145590155-5 (PDF) 12/09

Copyright 2014 National Fire Protection Association (NFPA). Licensed, by agreement, for individual use and download on October 4, 2014 to LEADER and READER for designated user PATTARAPORN SRITRAKOOL. No other reproduction or transmission in any form permitted without written permission of NFPA. For inquires or to report unauthorized use, contact licensing@nfpa.org.

IMPORTANT NOTICES AND DISCLAIMERS CONCERNING NFPA DOCUMENTS

ADDITIONAL NOTICES AND DISCLAIMERS

Updating of NFPA Documents

Users of NFPA codes, standards, recommended practices, and guides ("NFPA Documents") should be aware that these documents may be superseded at any time by the issuance of new editions or may be amended from time to time through the issuance of Tentative Interim Amendments. An official NFPA Document at any point in time consists of the current edition of the document together with any Tentative Interim Amendments and any Errata then in effect. In order to determine whether a given document is the current edition and whether it has been amended through the issuance of Tentative Interim Amendments or corrected through the issuance of Errata, consult appropriate NFPA publications such as the National Fire Codes® Subscription Service, visit the NFPA website at www.nfpa.org, or contact the NFPA at the address listed below.

Interpretations of NFPA Documents

A statement, written or oral, that is not processed in accordance with Section 6 of the Regulations Governing Committee Projects shall not be considered the official position of NFPA or any of its Committees and shall not be considered to be, nor be relied upon as, a Formal Interpretation.

Patents

The NFPA does not take any position with respect to the validity of any patent rights referenced in, related to, or asserted in connection with an NFPA Document. The users of NFPA Documents bear the sole responsibility for determining the validity of any such patent rights, as well as the risk of infringement of such rights, and the NFPA disclaims liability for the infringement of any patent resulting from the use of or reliance on NFPA Documents.

NFPA adheres to the policy of the American National Standards Institute (ANSI) regarding the inclusion of patents in American National Standards ("the ANSI Patent Policy"), and hereby gives the following notice pursuant to that policy:

NOTICE: The user's attention is called to the possibility that compliance with an NFPA Document may require use of an invention covered by patent rights. NFPA takes no position as to the validity of any such patent rights or as to whether such patent rights constitute or include essential patent claims under the ANSI Patent Policy. If, in connection with the ANSI Patent Policy, a patent holder has filed a statement of willingness to grant licenses under these rights on reasonable and nondiscriminatory terms and conditions to applicants desiring to obtain such a license, copies of such filed statements can be obtained, on request, from NFPA. For further information, contact the NFPA at the address listed below.

Law and Regulations

Users of NFPA Documents should consult applicable federal, state, and local laws and regulations. NFPA does not, by the publication of its codes, standards, recommended practices, and guides, intend to urge action that is not in compliance with applicable laws, and these documents may not be construed as doing so.

Copyrights

NFPA Documents are copyrighted by the NFPA. They are made available for a wide variety of both public and private uses. These include both use, by reference, in laws and regulations, and use in private self-regulation, standardization, and the promotion of safe practices and methods. By making these documents available for use and adoption by public authorities and private users, the NFPA does not waive any rights in copyright to these documents.

Use of NFPA Documents for regulatory purposes should be accomplished through adoption by reference. The term "adoption by reference" means the citing of title, edition, and publishing information only. Any deletions, additions, and changes desired by the adopting authority should be noted separately in the adopting instrument. In order to assist NFPA in following the uses made of its documents, adopting authorities are requested to notify the NFPA (Attention: Secretary, Standards Council) in writing of such use. For technical assistance and questions concerning adoption of NFPA Documents, contact NFPA at the address below.

For Further Information

All questions or other communications relating to NFPA Documents and all requests for information on NFPA procedures governing its codes and standards development process, including information on the procedures for requesting Formal Interpretations, for proposing Tentative Interim Amendments, and for proposing revisions to NFPA documents during regular revision cycles, should be sent to NFPA headquarters, addressed to the attention of the Secretary, Standards Council, NFPA, 1 Batterymarch Park, P.O. Box 9101, Quincy, MA 02169-7471; email: stds_admin@nfpa.org

For more information about NFPA, visit the NFPA website at www.nfpa.org.

Copyright 2014 National Fire Protection Association (NFPA). Licensed, by agreement, for individual use and download on October 4, 2014 to LEADER and READER for designated user PATTARAPORN SRITRAKOOL. No other reproduction or transmission in any form permitted without written permission of NFPA. For inquires or to report unauthorized use, contact licensing@nfpa.org.

Copyright © 2011 National Fire Protection Association®. All Rights Reserved.

NFPA® 664

Standard for the

Prevention of Fires and Explosions in Wood Processing and Woodworking Facilities

2012 Edition

This edition of NFPA 664, *Standard for the Prevention of Fires and Explosions in Wood Processing and Woodworking Facilities*, was prepared by the Technical Committee on Wood and Cellulosic Materials Processing and acted on by NFPA at its June Association Technical Meeting held June 12–15, 2011, in Boston, MA. It was issued by the Standards Council on August 11, 2011, with an effective date of August 31, 2011, and supersedes all previous editions.

This edition of NFPA 664 was approved as an American National Standard on August 31, 2011.

Origin and Development of NFPA 664

NFPA activity in the field of wood dust explosion hazards dates from 1930, when work on *Code on Wood Flour Manufacturing* (No. 662) was initiated. The first edition was adopted in 1931, and subsequent editions were issued in 1940, 1942, 1946, and 1949. A separate code on *Woodworking Plants* (No. 663) was added in 1934 and was reissued in 1952 and 1959. In 1960, these two codes were combined in a new one, *Code for the Prevention of Dust Explosions in Woodworking and Wood Flour Manufacturing Plants* (No. 664), and revised editions were adopted in 1962, 1971, 1981, 1987, 1993, and 1998. In the 2002 edition, NFPA 664, *Standard for the Prevention of Fires and Explosions in Wood Processing and Woodworking Facilities*, was expanded to include all the fire hazards associated with wood processing facilities (the occupancy), not just the dust (the commodity). The scope was modified to exclude very small facilities that represented substantially smaller perceived risk based on explicit facility area and flow rate criteria. The standard was also revised to allow a performance-based design approach as an alternative to the prescriptive design criteria itemized in the standard. The section on dust collectors was revised to permit the use of enclosureless dust collectors, based upon specific design criteria. The standard was also modified to comply with the updated *Manual of Style for NFPA Technical Committee Documents*.

The 2007 edition was modified to include requirements for a formal documented hazard analysis as the basis for the applicability of the prescriptive design criteria in the standard. Additional requirements were added for what is required of a designer who elects to use performance-based design methods and to bring this section into conformance with the performance-based design requirements in *NFPA 101®, Life Safety Code®*. Advisory material was added regarding choices for placement of an abort gate with respect to the dust collector.

The 2012 edition has been modified to include a new definition of *deflagration hazard* in Chapter 3; a new methodology for the determination of a deflagration hazard using settled bulk density to determine an allowable thickness for combustible wood dust accumulations has been added to Chapter 4. Detailed instructions on how to collect the dust sample for the new methodology have been added to Annex A. In addition, the existing definition of *enclosureless dust collector* has been revised, along with the definitions for *deflagrable wood dust*, *dry nondeflagrable wood dust*, and *floor sweep* to coincide with the requirements in the standards that use those terms.

A new section containing requirements for hazard determination has been added to Chapter 8, including the use of access doors for inspection of and fire department access to ductwork. Existing requirements for use of explosion protection systems and deflagration venting on metal ducts located both indoors and outdoors have been revised in Chapter 8.

The existing MEC (maximum explosibile concentration) percentage for wood dust has been revised from 75 percent to 25 percent for fans, blowers, and air-moving devices to be consistent with NFPA 69, *Standard on Explosion Prevention Systems*. In addition, the existing requirements for dust collectors with deflagration hazards to be equipped with a deflagration suppression system have been revised to be consistent with NFPA 69, and the existing requirements for deflagration relief vents on dust collectors have been revised to be consistent with NFPA 68, *Standard on Explosion Protection by Deflagration Venting*. The existing requirements for recycling of air-material separator exhaust into buildings have been revised. New material on control system design for solid fueled burners has been added to Annex A.

NFPA and National Fire Protection Association are registered trademarks of the National Fire Protection Association, Quincy, Massachusetts 02169.

Copyright 2014 National Fire Protection Association (NFPA). Licensed, by agreement, for individual use and download on October 4, 2014 to LEADER and READER for designated user PATTARAPORN SRITRAKOOL. No other reproduction or transmission in any form permitted without written permission of NFPA. For inquires or to report unauthorized use, contact licensing@nfpa.org.

Technical Committee on Wood and Cellulosic Materials Processing

Arthur P. Mattos, Jr., *Chair*
XL Global Asset Protection Services, NC [I]

Bob Barnum, GreCon, Incorporated, OR [M]
Robert C. Berry, Liberty Mutual Property, NC [I]
Brice Chastain, Georgia-Pacific LLC, GA [U]
John M. Cholin, J. M. Cholin Consultants Inc., NJ [SE]
Don Curtis, Acadia Insurance Company, ME [I]
Randal R. Davis, UTC/Kidde-Fenwal, Inc., MA [M]
Dennis W. Eaves, Matrix Risk Consultants, GA [I]
Harvey Eng, FM Global, Canada [I]
Sam W. Francis, American Forest & Paper Association, PA [U]
Dan A. Guaricci, ATEX Explosion Protection L.P., FL [M]
Peter Levitt, Sternvent Company, Inc., NJ [M]
Ken J. Mayeaux, International Paper Company, TN [U]
Timothy J. Myers, Exponent, Inc., MA [SE]
Jack E. Osborn, Airdusco, Inc., TN [M]
James C. Stewart, Marsh USA Inc., VA [I]
Francois Tanguay, Louisiana Pacific Canada Ltd., Canada [M]
Erdem A. Ural, Loss Prevention Science & Technologies, Inc., MA [SE]
Allen Wagoner, FLAMEX, Inc., NC [M]
Mike Walters, Albarrie Environmental Engineering Services, AR [M]

Alternates

Kenneth E. Bland, American Forest & Paper Association, DC [U]
(Alt. to S. W. Francis)
John Lysy, Acadia Insurance Company, NH [I]
(Alt. to D. Curtis)
Glenn Mahnken, FM Global, MA [I]
(Alt. to H. Eng)
Richard F. Masta, Georgia-Pacific LLC, GA [U]
(Alt. to B. Chastain)
Paul G. Parker, Liberty Mutual Property, GA [I]
(Alt. to R. C. Berry)

Nonvoting

Robert W. Nelson, Pocasset, MA [SE]
(Member Emeritus)
Lowell E. Pauli, Lowell E. Pauli & Associates, OR [SE]
(Member Emeritus)
Jason P. Reason, Indiana Department of Labor/IOSHA, IN [E]

Martha H. Curtis, NFPA Staff Liaison

This list represents the membership at the time the Committee was balloted on the final text of this edition. Since that time, changes in the membership may have occurred. A key to classifications is found at the back of the document.

NOTE: Membership on a committee shall not in and of itself constitute an endorsement of the Association or any document developed by the committee on which the member serves.

Committee Scope: This Committee shall have primary responsibility for documents on the prevention, control, and extinguishment of fires and explosions in wood processing, woodworking facilities, and facilities that use other cellulosic materials as a substitute or additive for wood.

Copyright 2014 National Fire Protection Association (NFPA). Licensed, by agreement, for individual use and download on October 4, 2014 to LEADER and READER for designated user PATTARAPORN SRITRAKOOL. No other reproduction or transmission in any form permitted without written permission of NFPA. For inquires or to report unauthorized use, contact licensing@nfpa.org.

Contents

Chapter 1 Administration **664**– 5
1.1 Scope **664**– 5
1.2 Purpose **664**– 5
1.3 Application **664**– 5
1.4 Retroactivity **664**– 5
1.5 Equivalency **664**– 5
1.6 Units and Formulas **664**– 5

Chapter 2 Referenced Publications **664**– 5
2.1 General **664**– 5
2.2 NFPA Publications **664**– 5
2.3 Other Publications **664**– 6
2.4 References for Extracts in Mandatory Sections **664**– 6

Chapter 3 Definitions **664**– 6
3.1 General **664**– 6
3.2 NFPA Official Definitions **664**– 6
3.3 General Definitions **664**– 7

Chapter 4 General Requirements **664**– 8
4.1 Goal **664**– 8
4.2 Deflagration Hazard **664**– 8
4.3 Process Analysis **664**– 8
4.4 Management of Change **664**– 8
4.5 Designer and Installer Qualifications **664**– 8
4.6 Objectives **664**– 8
4.7 Compliance Options **664**– 9

Chapter 5 Performance-Based Design Option **664**– 9
5.1 General Requirements **664**– 9
5.2 Performance Criteria **664**– 9
5.3 Design Fire Scenarios **664**–10
5.4 Evaluation of Proposed Design **664**–10
5.5 Safety Factors **664**–11

Chapter 6 Building Construction **664**–11
6.1 Prescriptive Requirements **664**–11
6.2 Compartmentation **664**–11
6.3 Occupant Life Safety Systems Means of Egress **664**–11
6.4 Special Requirements **664**–11

Chapter 7 Prevention of Ignition and Control of Ignition Sources **664**–12
7.1 Prescriptive Requirements **664**–12
7.2 Hot Work **664**–12
7.3 Electrical Systems **664**–12
7.4 Hot Surfaces **664**–12
7.5 Industrial Trucks **664**–12
7.6 Lighting **664**–12
7.7 Fuel-Fired Equipment **664**–12
7.8 Lightning Protection **664**–12
7.9 Static Electricity **664**–12
7.10 Machines and Processing Equipment **664**–12
7.11 Machinery Setup and Maintenance **664**–13
7.12 Foreign Material **664**–13
7.13 Friction **664**–13
7.14 Fans **664**–13
7.15 Spontaneous Ignition and Chemical Action **664**–13
7.16 Propellant-Actuated Tools **664**–13
7.17 Smoking **664**–13
7.18 Portable Electric Equipment and Appliances **664**–13

Chapter 8 Processes, Operations, and Special Systems **664**–13
8.1 General **664**–13
8.2 Particulate Conveying and Dust Collection Systems **664**–13
8.3 Thermal Oil Heating Systems **664**–17
8.4 Particulate Size Reduction Equipment **664**–20
8.5 Panel Product Manufacturing Machinery **664**–20
8.6 Dryer Systems **664**–20
8.7 Spray Finishing **664**–21
8.8 Dipping and Coating **664**–21
8.9 Pollution Control Equipment **664**–21
8.10 Storage **664**–21
8.11 Hot Presses **664**–22
8.12 Wood Scrap or Wood Waste Processing and Disposal **664**–22

Chapter 9 Fire Protection **664**–22
9.1 General Fire Protection **664**–22

Chapter 10 Human Element **664**–23
10.1 Objective **664**–23
10.2 Inspection and Maintenance **664**–23
10.3 Record Retention **664**–23
10.4 Employee Training **664**–23
10.5 Contractors and Subcontractors **664**–24
10.6 Portable Appliances **664**–24
10.7 Management of Change **664**–24
10.8 Incident Investigation **664**–24
10.9 Impairments of Fire Protection and Explosion Prevention Systems **664**–24
10.10 Smoking **664**–24
10.11 Hot Work **664**–24
10.12 Emergency Planning and Response **664**–24

Chapter 11 Housekeeping **664**–24
11.1 General Requirements **664**–24
11.2 Cleanup Methods **664**–25

Copyright 2014 National Fire Protection Association (NFPA). Licensed, by agreement, for individual use and download on October 4, 2014 to LEADER and READER for designated user PATTARAPORN SRITRAKOOL. No other reproduction or transmission in any form permitted without written permission of NFPA. For inquires or to report unauthorized use, contact licensing@nfpa.org.

Annex A Explanatory Material **664**–25

Annex B Explosion Protection **664**–53

Annex C Informational Primer on Spark Detection and Extinguishing Systems **664**–57

Annex D Conveying System Isolation **664**–60

Annex E Automatic Water Spray Deluge Protection for Dryer Systems **664**–64

Annex F Informational References **664**–66

Index **664**–68

Copyright 2014 National Fire Protection Association (NFPA). Licensed, by agreement, for individual use and download on October 4, 2014 to LEADER and READER for designated user PATTARAPORN SRITRAKOOL. No other reproduction or transmission in any form permitted without written permission of NFPA. For inquires or to report unauthorized use, contact licensing@nfpa.org.

NFPA 664

Standard for the

Prevention of Fires and Explosions in Wood Processing and Woodworking Facilities

2012 Edition

IMPORTANT NOTE: This NFPA document is made available for use subject to important notices and legal disclaimers. These notices and disclaimers appear in all publications containing this document and may be found under the heading "Important Notices and Disclaimers Concerning NFPA Documents." They can also be obtained on request from NFPA or viewed at www.nfpa.org/disclaimers.

NOTICE: An asterisk (*) following the number or letter designating a paragraph indicates that explanatory material on the paragraph can be found in Annex A.

Changes other than editorial are indicated by a vertical rule beside the paragraph, table, or figure in which the change occurred. These rules are included as an aid to the user in identifying changes from the previous edition. Where one or more complete paragraphs have been deleted, the deletion is indicated by a bullet (•) between the paragraphs that remain.

A reference in brackets [ ] following a section or paragraph indicates material that has been extracted from another NFPA document. As an aid to the user, the complete title and edition of the source documents for extracts in mandatory sections of the document are given in Chapter 2 and those for extracts in informational sections are given in Annex F. Extracted text may be edited for consistency and style and may include the revision of internal paragraph references and other references as appropriate. Requests for interpretations or revisions of extracted text shall be sent to the technical committee responsible for the source document.

Information on referenced publications can be found in Chapter 2 and Annex F.

Chapter 1 Administration

1.1 Scope. This standard shall establish the minimum requirements for fire and explosion prevention and protection of industrial, commercial, or institutional facilities that process wood or manufacture wood products, using wood or other cellulosic fiber as a substitute for or additive to wood fiber, and that process wood, creating wood chips, particles, or dust.

1.1.1 Woodworking and wood processing facilities shall include, but are not limited to, wood flour plants, industrial woodworking plants, furniture plants, plywood plants, composite board plants, lumber mills, and production-type woodworking shops and carpentry shops that are incidental to facilities that would not otherwise fall within the purview of this standard.

1.1.2* This standard shall apply to woodworking operations that occupy areas of more than 465 m^2 (5000 ft^2) or where dust-producing equipment requires an aggregate dust collection flow rate of more than 2549 m^3/hr (1500 ft^3/min).

1.2 Purpose. The purpose of this standard shall be to provide minimum requirements, with due function, for the design, operation, and maintenance of woodworking and wood processing facilities for the safety to life, property protection, and mission continuity from fire and explosion.

1.3 Application. This standard shall be applied to new facilities and to new processes within existing facilities.

1.4 Retroactivity. The provisions of this standard reflect a consensus of what is necessary to provide an acceptable degree of protection from the hazards addressed in this standard at the time the standard was issued.

1.4.1 Unless otherwise specified, the provisions of this standard shall not apply to facilities, equipment, structures, or installations that existed or were approved for construction or installation prior to the effective date of the standard. Where specified, the provisions of this standard shall be retroactive.

1.4.2 In those cases where the authority having jurisdiction determines that the existing situation presents an unacceptable degree of risk, the authority having jurisdiction shall be permitted to apply retroactively any portions of this standard deemed appropriate.

1.4.3 The retroactive requirements of this standard shall be permitted to be modified if their application clearly would be impractical in the judgment of the authority having jurisdiction, and only where it is clearly evident that a reasonable degree of safety is provided.

1.5 Equivalency. Nothing in this standard is intended to prevent the use of systems, methods, or devices of equivalent or superior quality, strength, fire resistance, effectiveness, durability, and safety over those prescribed by this standard.

1.5.1 Technical documentation shall be submitted to the authority having jurisdiction to demonstrate equivalency.

1.5.2 The system, method, or device shall be approved for the intended purpose by the authority having jurisdiction.

1.6 Units and Formulas.

1.6.1 SI Units. Metric units of measurement in this standard shall be in accordance with the modernized metric system known as the International System of Units (SI).

1.6.2* Primary and Equivalent Values. If a value for a measurement as given in this standard is followed by an equivalent value in other units, the first stated value shall be regarded as the requirement.

1.6.3 Conversion Procedure. SI units shall be converted by multiplying the quantity by the conversion factor and then rounding the result to the appropriate number of significant digits.

Chapter 2 Referenced Publications

2.1 General. The documents or portions thereof listed in this chapter are referenced within this standard and shall be considered part of the requirements of this document.

2.2 NFPA Publications. National Fire Protection Association, 1 Batterymarch Park, Quincy, MA 02169-7471.

NFPA 10, *Standard for Portable Fire Extinguishers,* 2010 edition.

NFPA 11, *Standard for Low-, Medium-, and High-Expansion Foam,* 2010 edition.

Copyright 2014 National Fire Protection Association (NFPA). Licensed, by agreement, for individual use and download on October 4, 2014 to LEADER and READER for designated user PATTARAPORN SRITRAKOOL. No other reproduction or transmission in any form permitted without written permission of NFPA. For inquires or to report unauthorized use, contact licensing@nfpa.org.

NFPA 12, *Standard on Carbon Dioxide Extinguishing Systems,* 2011 edition.

NFPA 13, *Standard for the Installation of Sprinkler Systems,* 2010 edition.

NFPA 14, *Standard for the Installation of Standpipe and Hose Systems,* 2010 edition.

NFPA 15, *Standard for Water Spray Fixed Systems for Fire Protection,* 2012 edition.

NFPA 17, *Standard for Dry Chemical Extinguishing Systems,* 2009 edition.

NFPA 20, *Standard for the Installation of Stationary Pumps for Fire Protection,* 2010 edition.

NFPA 22, *Standard for Water Tanks for Private Fire Protection,* 2008 edition.

NFPA 24, *Standard for the Installation of Private Fire Service Mains and Their Appurtenances,* 2010 edition.

NFPA 25, *Standard for the Inspection, Testing, and Maintenance of Water-Based Fire Protection Systems,* 2011 edition.

NFPA 30, *Flammable and Combustible Liquids Code,* 2012 edition.

NFPA 31, *Standard for the Installation of Oil-Burning Equipment,* 2011 edition.

NFPA 33, *Standard for Spray Application Using Flammable or Combustible Materials,* 2011 edition.

NFPA 34, *Standard for Dipping, Coating, and Printing Processes Using Flammable or Combustible Liquids,* 2011 edition.

NFPA 51B, *Standard for Fire Prevention During Welding, Cutting, and Other Hot Work,* 2009 edition.

NFPA 54, *National Fuel Gas Code,* 2012 edition.

NFPA 68, *Standard on Explosion Protection by Deflagration Venting,* 2007 edition.

NFPA 69, *Standard on Explosion Prevention Systems,* 2008 edition.

NFPA 70®, National Electrical Code®, 2011 edition.

NFPA 72®, National Fire Alarm and Signaling Code, 2010 edition.

NFPA 80, *Standard for Fire Doors and Other Opening Protectives,* 2010 edition.

NFPA 82, *Standard on Incinerators and Waste and Linen Handling Systems and Equipment,* 2009 edition.

NFPA 85, *Boiler and Combustion Systems Hazards Code,* 2011 edition.

NFPA 91, *Standard for Exhaust Systems for Air Conveying of Vapors, Gases, Mists, and Noncombustible Particulate Solids,* 2010 edition.

NFPA *101®, Life Safety Code®,* 2012 edition.

NFPA 221, *Standard for High Challenge Fire Walls, Fire Walls, and Fire Barrier Walls,* 2012 edition.

NFPA 505, *Fire Safety Standard for Powered Industrial Trucks Including Type Designations, Areas of Use, Conversions, Maintenance, and Operations,* 2011 edition.

NFPA 600, *Standard on Industrial Fire Brigades,* 2010 edition.

NFPA 654, *Standard for the Prevention of Fire and Dust Explosions from the Manufacturing, Processing, and Handling of Combustible Particulate Solids,* 2006 edition.

NFPA 750, *Standard on Water Mist Fire Protection Systems,* 2010 edition.

NFPA 780, *Standard for the Installation of Lightning Protection Systems,* 2011 edition.

NFPA 2001, *Standard on Clean Agent Fire Extinguishing Systems,* 2012 edition.

2.3 Other Publications.

2.3.1 ANSI Publications. American National Standards Institute, Inc., 25 West 43rd Street, 4th floor, New York, NY 10036.

ANSI/ASME B31.1, *Power Piping,* 2007.

ANSI/ASME B31.3, *Chemical Plant and Petroleum Refinery Piping,* 2008.

2.3.2 ASME Publications. American Society of Mechanical Engineers, Three Park Avenue, New York, NY 10016-5990.

Boiler and Pressure Vessel Code, 2004.

2.3.3 ASTM Publications. ASTM International, 100 Barr Harbor Drive, P.O. Box C700, West Conshohocken, PA 19428-2959.

ASTM E 1515, *Standard Test Method for Minimum Explosible Concentration of Combustible Dust,* 2007.

ASTM E 1226, *Standard Test Method for Explosibility of Dust Clouds,* 2010.

ASTM E 1591, *Standard Guide for Obtaining Data for Deterministic Fire Models,* 2007.

2.3.4 Other Publications. *Merriam-Webster's Collegiate Dictionary,* 11th edition, Merriam-Webster, Inc., Springfield, MA, 2003.

2.4 References for Extracts in Mandatory Sections.

NFPA 13, *Standard for the Installation of Sprinkler Systems,* 2010 edition.

NFPA 68, *Standard on Explosion Protection by Deflagration Venting,* 2007 edition.

NFPA 654, *Standard for the Prevention of Fire and Dust Explosions from the Manufacturing, Processing, and Handling of Combustible Particulate Solids,* 2006 edition.

Chapter 3 Definitions

3.1 General. The definitions contained in this chapter shall apply to the terms used in this standard. Where terms are not defined in this chapter or within another chapter, they shall be defined using their ordinarily accepted meanings within the context in which they are used. *Merriam-Webster's Collegiate Dictionary,* 11th edition, shall be the source for the ordinarily accepted meaning.

3.2 NFPA Official Definitions.

3.2.1* Approved. Acceptable to the authority having jurisdiction.

3.2.2* Authority Having Jurisdiction (AHJ). An organization, office, or individual responsible for enforcing the requirements of a code or standard, or for approving equipment, materials, an installation, or a procedure.

3.2.3 Labeled. Equipment or materials to which has been attached a label, symbol, or other identifying mark of an organization that is acceptable to the authority having jurisdiction and concerned with product evaluation, that maintains periodic inspection of production of labeled equipment or materials, and by whose labeling the manufacturer indicates compliance with appropriate standards or performance in a specified manner.

3.2.4* Listed. Equipment, materials, or services included in a list published by an organization that is acceptable to the authority having jurisdiction and concerned with evaluation of products or services, that maintains periodic inspection of production of listed equipment or materials or periodic evaluation of services, and whose listing states that either the equipment, material, or service meets appropriate designated standards or has been tested and found suitable for a specified purpose.

Copyright 2014 National Fire Protection Association (NFPA). Licensed, by agreement, for individual use and download on October 4, 2014 to LEADER and READER for designated user PATTARAPORN SRITRAKOOL. No other reproduction or transmission in any form permitted without written permission of NFPA. For inquires or to report unauthorized use, contact licensing@nfpa.org.

3.2.5 Shall. Indicates a mandatory requirement.

3.2.6 Standard. A document, the main text of which contains only mandatory provisions using the word "shall" to indicate requirements and which is in a form generally suitable for mandatory reference by another standard or code or for adoption into law. Nonmandatory provisions shall be located in an appendix or annex, footnote, or fine-print note and are not to be considered a part of the requirements of a standard.

3.3 General Definitions.

3.3.1 Combustion Chamber. Enclosure where the combustion takes place and the fuel energy is liberated in the form of heat.

3.3.2 Compartment. A space completely enclosed by walls and a ceiling. Each wall in the compartment is permitted to have openings to an adjoining space if the openings have a minimum lintel depth of 200 mm (8 in.) from the ceiling and the total width of the openings in each wall does not exceed 2.4 m (8 ft). A single opening of 900 mm (36 in.) or less in width without a lintel is permitted when there are no other openings to adjoining spaces. [**13,** 2010]

3.3.3 Cyclone. See 3.3.10.1.

3.3.4* Damage-Limiting Construction. A building construction method that incorporates exterior wall or roof sections, or both, designed to relieve deflagration pressures without jeopardizing the structural integrity of the building and without allowing the deflagration to propagate into adjacent interior spaces.

3.3.5 Deflagrable Wood Dust. See 3.3.27.1.

3.3.6 Deflagration. Propagation of a combustion zone at a velocity that is less than the speed of sound in the unreacted medium. [**68,** 2007]

3.3.7* Deflagration Hazard. A hazard determined to exist where either of the two following conditions is present: (1) deflagrable wood dust is present as a layer on upward facing surfaces at a depth greater than that permitted in Section 4.2 or (2) deflagrable wood dust is suspended in the air at a concentration in excess of 25 percent of the MEC under normal operating conditions.

3.3.8 Dry Nondeflagrable Wood Dust. See 3.3.27.2.

3.3.9* Dust Collection Systems. A pneumatic conveying system that is specifically designed to capture dust and wood particulates at the point of generation, usually from multiple sources, and to convey the particulates to a point of consolidation.

3.3.10 Dust Collector. Any device used to separate the material from the air stream, including but not limited to cyclones, filter media-type (baghouse), and enclosureless units.

3.3.10.1* *Cyclone.* A cylindrical type of dust collector used to separate particulates from the air stream by centrifugal force, having an enclosure of circular cross-section, a tangential air and material inlet, an air exhaust outlet, and a material discharge.

3.3.10.2* *Enclosureless Dust Collector.* An air-material separator designed and used to remove dust from the transport air possessing all of the following: (1) the filtration is accomplished by passing dust-laden air through filter media, collecting the dust on the inside of the filter media, and allowing cleaned air to exit to the surrounding area; (2) the filter media are not enclosed or in a container; (3) there is no means to mechanically shake or pressure-pulse the filter media while the fan is on; (4) the filter media are under positive pressure; and (5) removal of the collected dust is not continuous or mechanical.

3.3.11 Explosion. The bursting or rupture of an enclosure or a container due to the development of internal pressure from a deflagration.

3.3.12 Explosion Hazard. An enclosure of any type, including but not limited to silos, dust collectors, enclosed conveyors, bins, bunkers, rooms, and buildings where a deflagration hazard exists.

3.3.13 Floor Sweep. A suction hood located on the floor with an opening to allow floor sweepings to enter the dust collection system.

3.3.14 Green Material. Wood particulate that has an average moisture content equal to or greater than 25 percent by weight (wet basis).

3.3.15 Hog (Wood Hog). A machine used to grind or reduce the size of wood, other feed stock, or scrap wood.

3.3.16 Kiln Dryers. Large heated rooms or enclosures intended to reduce or control the moisture content of lumber and hardboard products.

3.3.17* Minimum Explosible Concentration (MEC). The minimum concentration of a combustible dust suspended in air, measured in mass per unit volume, that will support a deflagration. [**654,** 2006]

3.3.18* Moisture Content (Wet Basis). The maximum percentage of water that can be driven off a sample through drying as a percentage of the original sample weight.

3.3.19 Nonvaporizing Thermal Oil Heating System. See 3.3.22.1.

3.3.20 Pneumatic Conveying System. A material feeder, an air-material separator, an enclosed ductwork system, and an air-moving device in which a combustible particulate solid is conveyed from one point to another with a stream of air or other gases. [**654,** 2006]

3.3.21 Stuck Lumber. Lumber storage piles with 2.5 cm (1 in.) runners perpendicular to the storage at every level.

3.3.22 Thermal Oil Heating System. A thermal oil heating system is a closed loop circulating system that heats a flammable or combustible fluid and transports it to utilization equipment for the purpose of transferring its heat to the equipment.

3.3.22.1 *Nonvaporizing Thermal Oil Heating System.* A thermal oil heating system that is designed to operate with the heated oil below its atmospheric boiling point.

3.3.22.2 *Vaporizing Thermal Oil Heating System.* A thermal oil heating system that is designed to heat the oil above its atmospheric boiling point as it passes through the heater.

3.3.23 Thermal Oil Used as Heat Transfer Fluid. An organic or synthetic fluid that is flammable or combustible and that is used as a medium to transfer heat energy from a heater or vaporizer to a remote heat consumer.

3.3.24 Vaporizing Thermal Oil Heating System. See 3.3.22.2.

3.3.25 Wood. The cellulosic material derived from trees, and other cellulosic materials including, but not limited to, wheat straw, flax, bagasse, coconut shells, corn stalks, hemp, rice hulls, and paper or other cellulosic fiber used as a substitute or additive to wood.

Copyright 2014 National Fire Protection Association (NFPA). Licensed, by agreement, for individual use and download on October 4, 2014 to LEADER and READER for designated user PATTARAPORN SRITRAKOOL. No other reproduction or transmission in any form permitted without written permission of NFPA. For inquires or to report unauthorized use, contact licensing@nfpa.org.

3.3.26 Wood-Derived Materials. These materials include but are not limited to sawdust, sanderdust, planer shavings, hoggings, wood flour, and moulder waste.

3.3.27 Wood Dust.

3.3.27.1* ***Deflagrable Wood Dust.*** Wood particulate that will propagate a flame front, thus presenting a fire or explosion hazard, when suspended in air, or the process-specific oxidizing medium over a range of concentrations, regardless of particle size or shape; wood particulate with a mass median particle size of 500 microns or smaller (i.e., material that will pass through a U.S. No. 35 Standard Sieve), having a moisture content of less than 25 percent (wet basis).

3.3.27.2 ***Dry Nondeflagrable Wood Dust.*** Wood particulate with a mass median particle size greater than 500 microns (i.e., material that will not pass through a U.S. No. 35 Standard Sieve), having a moisture content of less than 25 percent (wet basis).

Chapter 4 General Requirements

4.1 Goal. The goal of this standard shall be to provide for a woodworking and wood processing facility that is reasonably protected from fire or deflagration in a cost-effective manner.

4.2 Deflagration Hazard.

4.2.1 A deflagration hazard shall be determined to exist where the layer of accumulated fugitive deflagrable wood dust on upward-facing surfaces exceeds 3.2 mm (⅛ in.) over 5 percent of the area or 93 m^2 (1000 ft^2), whichever is smaller. For smaller areas, a deflagration hazard shall exist where the accumulated fugitive deflagrable wood dust layer is equivalent to 3.2 mm (⅛ in.) over 5 percent of the area.

4.2.2* The layer thickness criterion in 4.2.1 shall be permitted to be corrected for dusts having a settled bulk density other than 20 lb/ft^3 using the following formula (Note: This equation normally appears in U.S. units only):

$$\text{Allowable thickness, } T_p\,(\text{in.}) = \frac{(0.125\text{ in.})(20\text{ lb/ft}^3)}{(\text{Settled Bulk Density, lb/ft}^3)}$$

where:
T_p = The allowable thickness (in.)

4.3* Process Analysis.

4.3.1 The design of the fire and deflagration safety provisions of the facility shall be based upon an analysis of the facility, the process, and the fire or deflagration hazards encompassed by the facility and process.

4.3.2 The design of systems and facilities that handle combustible particulate solids shall address the physical and chemical properties and hazardous characteristics of the materials in the hazard area.

4.3.3 The results of the facility and process analysis shall be permanently documented.

4.3.4 The facility and process analysis shall be reviewed and the documented results revised when the process is changed in accordance with the management-of-change criteria in Section 4.4 of this standard.

4.3.5 The results of the process analysis shall be maintained for the life of the facility and process.

4.4 Management of Change. Written procedures to manage change to process materials, technology, equipment, procedures, and facilities shall be established and implemented. The requirements of 4.4.1 and 4.4.2 shall be applied retroactively.

4.4.1 The management-of-change procedures shall ensure that the following issues are addressed prior to any change:

(1) Technical basis for the proposed change
(2) Safety and health implications
(3) Whether the change is permanent or temporary
(4) Modifications to operating and maintenance procedures
(5) Employee training requirements
(6) Authorization requirements for the proposed change

4.4.2 Implementation of the management-of-change procedures shall not be required for replacements-in-kind.

4.4.3 Design documentation, as required by Section 4.3, shall be updated to incorporate the change.

4.5 Designer and Installer Qualifications. Systems that handle combustible wood particulates shall be designed by and installed under the supervision of qualified engineers who are knowledgeable of these systems and their associated hazards.

4.6 Objectives.

4.6.1 Life Safety.

4.6.1.1* The facility, woodworking processes, and human element programs shall be designed, constructed, equipped, and maintained to protect the occupants from the effects of fire, deflagration, and explosion for the time needed to evacuate, relocate, or defend in place occupants who are not intimate with ignition.

4.6.1.2 The structure shall be located, designed, constructed, and maintained to prevent the propagation of fire or deflagration to adjacent properties and to avoid injury to the public at large.

4.6.2 Structural Integrity. The facility shall be designed, constructed, and equipped to maintain its structural integrity in spite of the effects of fire or deflagration for the time necessary to evacuate, relocate, or defend in place occupants who are not intimate with ignition.

4.6.3* Mission Continuity. The facility, woodworking processes and equipment, and human element program shall be designed, constructed, equipped, and maintained to limit damage to levels that ensure the ongoing mission, production, or operating capability of the facility to a degree acceptable to the relevant authority having jurisdiction.

4.6.4* Mitigation of Fire Spread and Explosions. The facility and processes within the facility shall prevent unintentional deflagrations and other ignitions of combustible materials that can cause failure of adjacent compartments, emergency life safety systems, adjacent properties, adjacent storage, or the facility's structural element.

4.6.4.1* The structure shall be designed, constructed, and maintained to prevent deflagrations from causing failure of load-bearing structural members, propagating into adjacent interior compartments, and incapacitating fire protective and emergency life safety systems in adjacent compartments.

Copyright 2014 National Fire Protection Association (NFPA). Licensed, by agreement, for individual use and download on October 4, 2014 to LEADER and READER for designated user PATTARAPORN SRITRAKOOL. No other reproduction or transmission in any form permitted without written permission of NFPA. For inquires or to report unauthorized use, contact licensing@nfpa.org.

4.6.4.2 The structure shall be located, designed, constructed, equipped, and maintained to prevent the propagation of fire or deflagration to or from adjacent storage or structures.

4.7 Compliance Options.

4.7.1 Options. Life safety, property protection, and mission continuity meeting the goals and objectives of Section 4.1 and Section 4.6 shall be provided in accordance with either of the following:

(1) Performance-based provisions per 4.7.2
(2) Prescriptive-based provisions per 4.7.3

4.7.2 Performance-Based Design. A performance-based design shall be in accordance with Chapter 5.

4.7.2.1* Performance-based designs shall be documented with all calculations, references, and sources from which material characteristics and other data have been obtained or upon which the designer has relied for some material aspect of the design per Chapter 5 of this standard and Chapter 5 of NFPA *101*, *Life Safety Code*.

4.7.2.2* Performance-based designs shall be subject to a complete, documented re-evaluation and reapproval if and when any of the assumptions upon which the original design is based are changed or when other aspects of the facility's operations are changed.

4.7.3 Prescriptive-Based Design. A prescriptive-based design shall be in accordance with Chapter 6 through Chapter 11.

Chapter 5 Performance-Based Design Option

5.1 General Requirements.

5.1.1 Approved Qualifications. The performance-based design shall be prepared by a person with qualifications acceptable to the authority having jurisdiction.

5.1.2 Independent Review. The authority having jurisdiction shall be permitted to require an approved, independent third party to review the proposed design and provide an evaluation of the design to the authority having jurisdiction.

5.1.3 Sources of Data.

5.1.3.1 Data sources shall be identified and documented for each input data requirement that must be met using a source other than a design fire scenario, an assumption, or a building design specification.

5.1.3.2 The degree of conservatism reflected in such data shall be specified, and a justification for the sources shall be provided.

5.1.4 Maintenance of the Design Features. To continue meeting the performance goals and objectives of this standard, the design features required for each hazard area shall be maintained for the life of the facility. This shall include complying with originally documented design assumptions and specifications. Any variation from the design shall require approval of the authority having jurisdiction prior to actual change.

5.1.5* Documentation Requirements.

5.1.5.1 All aspects of the design shall be documented.

5.1.5.2 The content and format of the documentation shall comply with NFPA *101*, *Life Safety Code*, and be acceptable to the authority having jurisdiction.

5.2 Performance Criteria. A system and facility design shall be deemed to meet the objectives specified in Section 4.6 if its performance meets the criteria in this section.

5.2.1 Occupant Life Safety.

5.2.1.1 The life safety objectives of 4.6.1 with respect to a fire hazard shall be deemed to have been achieved when the following conditions are met:

(1) Ignition has been prevented.
(2) Extension of the fire beyond the locus of ignition has been prevented.
(3) Under all fire scenarios, no person, other than those intimate with the ignition, is exposed to untenable conditions due to the fire.
(4) Under all fire scenarios, no structural element of the building is damaged, during the period of time necessary to effect complete evacuation of the occupants, to the extent that it can no longer support its design load.

5.2.1.2 The life safety objectives of 4.6.1 with respect to a deflagration hazard shall be deemed to have been achieved when the following conditions are met:

(1) Ignition has been prevented.
(2) Under all deflagration scenarios, no person, other than those intimate with the ignition, is exposed to untenable conditions due to the occurrence of a deflagration.
(3) Under all deflagration scenarios, no person, other than those intimate with the ignition, is subject to missile impact due to the occurrence of a deflagration or explosion.
(4) Under all deflagration scenarios, no structural element of the building is damaged, during the period of time necessary to effect complete evacuation of the occupants, to the extent that it can no longer support its design load.

5.2.2 Structural Integrity.

5.2.2.1 The structural integrity objective of 4.6.2 with respect to fire shall be deemed to have been achieved when no structural element of the building is damaged to the extent that it can no longer support its design load under all fire scenarios.

5.2.2.2 The structural integrity objective of 4.6.2 with respect to deflagrations shall be deemed to have been achieved when no structural element of the building is damaged to the extent that it can no longer support its design load under all deflagration scenarios.

5.2.2.3 The structural integrity objective of 4.6.2 with respect to deflagrations shall be deemed to have been achieved when the pressure resulting from a deflagration within a building, vessel, enclosure, duct, or compartment during deflagration shall be limited to that pressure the containment can withstand, by design, without release of flame, burning fuel, hot combustion product gases, or missiles.

5.2.3 Mission Continuity. The mission continuity objectives of 4.6.3 shall be deemed to have been achieved when damage to equipment and the facility has been limited to a level of damage acceptable to the owner or operator.

Copyright 2014 National Fire Protection Association (NFPA). Licensed, by agreement, for individual use and download on October 4, 2014 to LEADER and READER for designated user PATTARAPORN SRITRAKOOL. No other reproduction or transmission in any form permitted without written permission of NFPA. For inquires or to report unauthorized use, contact licensing@nfpa.org.

5.2.4 Prevention of Ignition.

5.2.4.1* Prevention of ignition shall be deemed to be achieved when the temperature of the particulates present in the facility is maintained at a temperature lower than either of the following:

(1) Lowest reported dust layer ignition temperature
(2) Lowest temperature at which pyrolysis has been reported

5.2.4.2 For performance evaluation for prevention of ignition, the power (energy per unit time) criterion used shall be based upon the median particle mass, specific heat, coefficient of thermal conductivity, and emissivity. No credit shall be allowed for radiant or convective heat losses from the target particle.

5.2.5 Prevention of Fire Extension.

5.2.5.1 When limitation of fire spread is to be achieved, the following criteria shall be demonstrated:

(1) Radiant flux to adjacent combustibles shall not exceed 20 kW/m^2.
(2) Combustibles outside the compartment of fire origin shall not attain their ignition temperature.
(3) Particulate processing systems shall be designed, constructed, equipped, and maintained to prevent fire or deflagration from propagating from the process equipment to the building interior.
(4) Particulate processing systems shall be designed, constructed, equipped, and maintained to prevent fire or deflagration from propagating from one process system to an adjacent process system.
(5) The surface area, smoothness, and inclination of all interior surfaces shall be such that the aggregate dust accumulations of these surfaces will not propagate a deflagration if half the dust were suspended in a cloud and ignited.

5.2.5.2 Where the prevention of fire extension to adjacent buildings is to be achieved, the following criteria shall be demonstrated:

(1) Radiant flux to adjacent combustibles shall not exceed 20 kW/m^2.
(2) Combustibles outside the compartment of fire origin shall not attain their ignition temperature.
(3) The pressure within a building, vessel, enclosure, duct, or compartment during deflagration shall be limited to that pressure the containment can withstand, by design, without release of flame, burning fuel, hot gases, or missiles due to the internal deflagration pressure to an adjacent building.

5.2.6 Effects of Deflagrations. Where the prevention of damage due to deflagration is to be achieved, the criteria in 5.2.6.1 through 5.2.6.4 shall be demonstrated.

5.2.6.1 Deflagrations shall not produce any of the following conditions:

(1) Internal pressures in the containment vessel, room, or equipment sufficient to threaten the structural integrity of the equipment or the building
(2) Exposure of occupants to untenable conditions
(3) Damage in excess of the permissible loss

5.2.6.2 Deflagrations shall not result in the extension of the deflagration flame front outside the compartment or equipment of origin except where intentionally vented to a safe location.

5.2.6.3 Deflagrations shall not result in the rupture of the compartment or equipment of origin and the ejection of fragments that can constitute missile hazards.

5.2.6.4 The pressure within a vessel, enclosure, duct, or compartment during deflagration shall be limited to a pressure lower than the yield strength of the vessel, enclosure, duct, or compartment, without release of flame, burning fuel, hot gases, or missiles due to the internal deflagration pressure to an unsafe location.

5.3 Design Fire Scenarios.

5.3.1 Fire Scenarios.

5.3.1.1 Each fuel object in association with a credible ignition mechanism in the compartment shall be considered for inclusion as a fire scenario.

5.3.1.2 The fuel object that produces the most rapidly developing fire under normal operating conditions shall be included as one fire scenario.

5.3.1.3 The fuel object that produces the most rapidly developing fire under conditions of a production upset or single equipment failure shall be included as one fire scenario.

5.3.1.4 The fuel object that produces the greatest total heat release under normal operating conditions shall be included as one fire scenario.

5.3.1.5 The fuel object that produces the greatest total heat release under conditions of a production upset or single equipment failure shall be included as one fire scenario.

5.3.1.6 The fuel object that can produce a deep-seated fire under normal operating conditions shall be included as a fire scenario.

5.3.1.7 The fuel object that can produce a deep-seated fire under conditions of a production upset or single equipment failure shall be included as a fire scenario.

5.3.2 Deflagration Scenarios.

5.3.2.1 Each duct, enclosed conveyor, silo, bunker, cyclone, dust collector, or other vessel containing a combustible dust in sufficient quantity or conditions to support the propagation of a deflagration flame and a credible igniter front under normal operating conditions shall be included as a deflagration scenario.

5.3.2.2 Each duct, enclosed conveyor, silo, bunker, cyclone, dust collector, or other vessel containing a combustible dust in sufficient quantity or conditions to support the propagation of a deflagration flame front and a credible igniter under conditions of production upset or single equipment failure shall be included as a deflagration scenario.

5.3.2.3 Each building or building compartment containing a combustible dust in sufficient quantity or conditions to support the propagation of a deflagration flame and a credible igniter front under normal operating conditions shall be included as a deflagration scenario.

5.3.2.4 Each building or building compartment containing a combustible dust in sufficient quantity or conditions to support the propagation of a deflagration flame front and a credible igniter under conditions of production upset or single equipment failure shall be included as a deflagration scenario.

5.4 Evaluation of Proposed Design.

5.4.1* General. A proposed design's performance shall be assessed relative to each performance objective in Section 4.6 and each applicable scenario in Section 5.3, with the assessment conducted through the use of appropriate calculation

Copyright 2014 National Fire Protection Association (NFPA). Licensed, by agreement, for individual use and download on October 4, 2014 to LEADER and READER for designated user PATTARAPORN SRITRAKOOL. No other reproduction or transmission in any form permitted without written permission of NFPA. For inquires or to report unauthorized use, contact licensing@nfpa.org.

methods. The authority having jurisdiction shall approve the choice of assessment methods.

5.4.2 Use. For each scenario, the design professional shall use the assessment methods to demonstrate that the proposed design will achieve the goals and objectives, as measured by the performance criteria in light of the safety margins and uncertainty analysis, given the assumptions.

5.4.3 Input Data.

5.4.3.1 Data. Input data for computer fire models shall be obtained in accordance with ASTM E 1591, *Standard Guide for Obtaining Data for Deterministic Fire Models*. Data for use in analytical models that are not computer-based fire models shall be obtained using appropriate measurement, recording, and storage techniques to ensure the applicability of the data to the analytical method being used.

5.4.3.2 Data Requirements. A complete listing of input data requirements for all models, engineering methods, and other calculation or verification methods required or proposed as part of the performance-based design shall be provided.

5.4.3.3* Uncertainty and Conservatism of Data. Uncertainty in input data shall be analyzed and, as determined appropriate by the authority having jurisdiction, addressed through the use of conservative values.

5.4.4* Output Data. The assessment methods used shall accurately and appropriately produce the required output data from input data based on the design specifications, assumptions, and scenarios.

5.4.5 Validity. Evidence shall be provided confirming that the assessment methods are valid and appropriate for the proposed building, use, and conditions.

5.5 Safety Factors. A safety factor, acceptable to the authority having jurisdiction, shall be applied to the results of the design calculations as appropriate for the design method used to reflect uncertainty in the assumptions, data, and other factors associated with the performance-based design.

Chapter 6 Building Construction

6.1 Prescriptive Requirements.

6.1.1 Facilities that are not designed pursuant to the performance-based design methods outlined in Chapter 5 shall comply with the following deemed to satisfy prescriptive criteria provided by this chapter.

6.1.2* The type of construction shall be in accordance with the building code adopted by the authority having jurisdiction.

6.2* Compartmentation. Where required by other sections of this standard, passive fire protection features shall be utilized to prevent the spread of fires or deflagrations to adjacent compartments or occupancies. Passive fire protection features shall include, but not be limited to, space separation, fire walls, fire partitions, or draft curtains.

6.2.1 Fire Walls, Fire Partitions, and Fire Barrier Walls.

6.2.1.1 Walls erected as fire walls and fire barrier walls shall comply with NFPA 221, *Standard for High Challenge Fire Walls, Fire Walls, and Fire Barrier Walls*.

6.2.1.2 Fire barrier walls separating different occupancies shall have the minimum fire resistance rating required by code. Where no building code exists, fire barrier walls shall have a minimum fire resistance rating of 1 hour.

6.2.2 Protection of Openings and Penetrations.

6.2.2.1 Penetrations of walls, floors, or ceilings that provide a required fire separation shall be protected by listed systems or approved materials that have a fire resistance rating equal to that of the wall, floor, or ceiling and shall conform to the relevant requirements of NFPA 221, *Standard for High Challenge Fire Walls, Fire Walls, and Fire Barrier Walls*.

6.2.2.2 Penetrations in barriers erected to segregate dust hazards shall be dusttight.

6.2.2.3* Conveyor and chute openings in fire walls shall be protected by listed or approved, automatic-closing fire doors or fire dampers that have a fire resistance rating equivalent to the fire wall.

6.2.2.4 Fire doors shall be designed, installed, tested, and maintained in accordance with NFPA 80, *Standard for Fire Doors and Other Opening Protectives*.

6.2.2.5 Openings in walls designed to be explosion resistant shall be protected by doors that provide the same degree of explosion resistance protection as the walls.

6.2.2.5.1 Such doors shall be kept closed at all times when not actually being used.

6.2.2.5.2* Such doors shall not be considered as part of a required means of egress to satisfy the requirements of NFPA *101*, *Life Safety Code*.

6.3 Occupant Life Safety Systems Means of Egress.

6.3.1 Occupant life safety systems shall be designed, constructed, installed, and maintained in accordance with NFPA *101*, *Life Safety Code*.

6.3.2 The means of egress shall comply with NFPA *101*, *Life Safety Code*.

6.3.3 The design and construction of the building, mechanical and electrical systems, and systems and equipment necessary to the wood utilization occupancy shall be such that the occupants are able to recognize hazards and egress safely from the building in the event of one of the anticipated hazards.

6.3.4 The building design shall be such that the means of egress is clearly identifiable and usable for occupancy.

6.4 Special Requirements.

6.4.1* Surfaces and Ledges in Dusty Areas. Interior surfaces and ledges not readily accessible for cleaning shall be designed to minimize dust accumulation.

6.4.2 Damage-Limiting Construction.

6.4.2.1* A dust explosion in one enclosed area shall not damage the building structure, shall not breach any wall dividing this area from an adjacent area in the same building, and shall not propagate to any adjacent indoor area through openings in a dividing wall. The structure areas with a dust hazard shall be so constructed to relieve deflagration pressures and prevent the deflagration from propagating into adjacent interior spaces without losing structural integrity or emergency systems.

Copyright 2014 National Fire Protection Association (NFPA). Licensed, by agreement, for individual use and download on October 4, 2014 to LEADER and READER for designated user PATTARAPORN SRITRAKOOL. No other reproduction or transmission in any form permitted without written permission of NFPA. For inquires or to report unauthorized use, contact licensing@nfpa.org.

6.4.2.2* Where a deflagration hazard is known to exist in a room or building, it shall be considered to have an explosion hazard where dust accumulations exceed 3.2 mm (⅛ in.) or where visible dust clouds exist. Rooms or buildings where dust accumulations present an explosion hazard shall be provided with damage-limiting construction, including deflagration venting to a safe outside location.

6.4.2.3* Interior walls erected to isolate dust explosion hazards shall be designed for sufficient explosion resistance to preclude damage to these walls before the explosion pressure can be safely vented to the outside.

6.4.3 Draft Curtains.

6.4.3.1 Where required, draft curtains shall be constructed of noncombustible materials.

Exception: Where automatic sprinkler protection has been provided for the building, draft curtains shall be permitted to be constructed of combustible materials other than plastic. Wood panels less than 12.7 mm (½ in.) thick shall not be used.

6.4.3.1.1 Minimum 26 gauge steel sheeting [0.455 mm (0.018 in.)] shall be used.

6.4.3.1.2 Aluminum sheeting shall not be used.

6.4.3.2 Where required, draft curtains shall extend down from the roof deck a minimum depth of 10 percent of the floor-to-ceiling height and shall fit tight against the roof deck.

6.4.3.3 Beams, purlins, and other structural members extending down from the roof deck to a depth equal to or greater than 10 percent of the floor-to-ceiling height shall be deemed equivalent to draft curtains.

Chapter 7 Prevention of Ignition and Control of Ignition Sources

7.1 Prescriptive Requirements. Facilities that are not designed pursuant to the performance-based design methods outlined in Chapter 5 shall comply with the following deemed to satisfy prescriptive criteria provided by this chapter.

7.2 Hot Work. Hot work, including the use of propellant-actuated tools outside of areas specifically designated for this activity, shall be performed only under a hot work permit program and in accordance with NFPA 51B, *Standard for Fire Prevention During Welding, Cutting, and Other Hot Work.*

7.3 Electrical Systems.

7.3.1 All electrical systems and system components shall be installed in accordance with *NFPA 70, National Electrical Code.*

7.3.2* Portions of the facility where dust accumulations occur or where suspensions of wood dust in air could occur shall be equipped with electrical systems and equipment per Article 502 or 503 of *NFPA 70, National Electrical Code.*

7.4 Hot Surfaces.

7.4.1* Exterior surfaces of heated process equipment that are or could come in contact with wood shall not exceed a maximum allowable temperature of 260°C (500°F).

Exception: Processes protected in accordance with Chapters 8 and 9.

7.4.2* Bearings shall be dusttight ball or roller type and shall be monitored for adequate lubrication and excessive wear in accordance with 8.2.3.1.

7.5* Industrial Trucks. In areas with a deflagration hazard, only trucks listed or approved for the electrical classification of the area, where commercially available, shall be used in accordance with NFPA 505, *Fire Safety Standard for Powered Industrial Trucks Including Type Designations, Areas of Use, Conversions, Maintenance, and Operations.*

7.6* Lighting. Lighting system fixtures shall be designed, installed, and maintained such that they do not pose a potential ignition hazard due to the heat evolved from normal operation or as a result of catastrophic failure or damage.

7.7 Fuel-Fired Equipment.

7.7.1 Fuel-fired heating units shall be designed, installed, and maintained in accordance with the relevant NFPA codes and standards, including but not limited to the following:

(1) NFPA 31, *Standard for the Installation of Oil-Burning Equipment*
(2) NFPA 54, *National Fuel Gas Code*
(3) NFPA 85, *Boiler and Combustion Systems Hazards Code*

7.7.2 Wood-fired burners and boilers shall be designed, installed, and operated in a manner that prevents the unintentional ignition of wood or other cellulosic material outside the combustion zone.

7.7.3* Provisions shall be made to prevent the accumulation of wood and cellulosic dust on the heated surfaces of heating units.

Exception: Where the equipment is operated within the limits of 7.4.1.

7.7.4 In facility locations where airborne dust or dust accumulations on horizontal surfaces are apt to occur, heating units shall be provided with a source of combustion air ducted directly from the building exterior.

7.7.5 An emergency shutoff valve, readily accessible during a fire, shall be provided for flammable fuel lines.

7.8* Lightning Protection. Lightning protection, where provided, shall be designed, installed, and maintained in accordance with NFPA 780, *Standard for the Installation of Lightning Protection Systems.*

7.9* Static Electricity.

7.9.1 Air hoses and other dust-removal equipment pursuant to this section shall be conductive to prevent static electric charge generation by the airflow.

7.9.2 Where equipment is subject to the accumulation of static electric charge, the accumulation of static electric charge shall be controlled by one of the following:

(1) Permanent grounding and bonding of production equipment
(2) Grounded metal combs to provide discharge paths
(3) Other means shown to be effective and acceptable to the authority having jurisdiction

7.10* Machines and Processing Equipment.

7.10.1* Feed-Rate Controls (Hot Cuts). Feed rates and machine adjustments for the stock being processed on wood cutting, shaping, planing, and sanding operations shall be controlled to prevent ignition.

7.10.2 Cutter and Abrasive Maintenance.

7.10.2.1* Wood cutting, shaping, and planing equipment shall be maintained at a level of sharpness to minimize the heat generated from woodworking operations.

Copyright 2014 National Fire Protection Association (NFPA). Licensed, by agreement, for individual use and download on October 4, 2014 to LEADER and READER for designated user PATTARAPORN SRITRAKOOL. No other reproduction or transmission in any form permitted without written permission of NFPA. For inquires or to report unauthorized use, contact licensing@nfpa.org.

7.10.2.2* Abrasive cutting belts, disc surfaces, and devices shall not be used beyond their design lifetime and shall be replaced or cleaned in the manner specified by the manufacturer when showing signs of loading of the grit.

7.11 Machinery Setup and Maintenance.

7.11.1 Provisions shall be made to ensure that machine setup, including but not limited to depth of cut and feed rate, is properly fixed and secure from unintentional change during the production run, consistent with the manufacturer's operation manual.

7.11.2* Woodworking machines shall be maintained as required in the manufacturer's operation and maintenance manual.

7.12 Foreign Material.

7.12.1 Wood stock shall be inspected for foreign materials, such as nails, sugar taps, fencing wire, and so forth, prior to being processed.

7.12.2* Foreign materials, such as tramp metal, capable of igniting wood waste and wood dust shall be prevented from entering the wood and dust process equipment.

7.12.3 Prevention of foreign materials in dust collection systems shall be in accordance with 8.2.2.

7.12.4 Prevention of foreign materials in particulate size reduction equipment shall be in accordance with Section 8.4.

7.13 Friction.

7.13.1 All equipment shall be designed, installed, and operated to maintain alignment and lubrication to avoid ignition from frictional heating.

7.13.2* Roller or ball bearings shall be used on all processing and transfer equipment in accordance with 8.2.3.1.

Exception: Bushings shall be permitted to be used where an engineering analysis has shown that the mechanical loads and speeds preclude attainment of temperatures sufficient to ignite wood particulates in the environment of the machines in question.

7.14 Fans.

7.14.1 Requirements for fans and blowers used in pneumatic conveying systems shall be in accordance with Chapter 8.

7.14.2* Fans that are subject to combustible residue buildup on the fan, fan shroud, and drive mechanism shall be kept clean to prevent overheating and ignition of the deposits.

7.15 Spontaneous Ignition and Chemical Action.

7.15.1* When storage of wood or wood substitute particulates is employed, the wood or wood substitute particulates shall be evaluated for the potential for spontaneous ignition from chemical reactions during storage.

7.15.2 Wood or wood substitute particulates that are determined to have a spontaneous ignition potential shall be stored in one of the following locations:

(1) Outside
(2) Inside in accordance with Section 8.10
(3) In separate buildings
(4) In bins designed such that the particulate flow occurs in a first-in/first-out basis

7.15.3* Rags, cloths, filter media, or other similar material containing finishing oils that have been determined to have a spontaneous ignition potential shall be disposed of pursuant to 11.1.11.

7.16 Propellant-Actuated Tools.

7.16.1 Propellant-actuated tools shall not be used in areas where combustible dust or dust clouds are present.

7.16.2 When the use of propellant-actuated tools becomes necessary, the following procedures shall be performed prior to their use:

(1) All dust-producing machinery in the area shall be shut down.
(2) All equipment, floors, and walls shall be carefully cleaned.
(3) All dust accumulations shall be removed.

7.16.3 A check shall be made after the work is completed to ensure that no cartridges of charges are left in the premises where they could enter equipment or be accidentally discharged after operation of the dust-producing or -handling machinery is resumed.

7.17 Smoking. Smoking shall be restricted in accordance with Section 10.10.

7.18* Portable Electric Equipment and Appliances. Portable electric equipment and appliances used in hazardous areas shall be listed for the area in which they are to be used.

Chapter 8 Processes, Operations, and Special Systems

8.1 General.

8.1.1* Applicability. This chapter shall apply to all pneumatic systems, dust control systems, mechanical conveyors, and mechanical equipment of all types used to convey, resize, pulverize, dry, or otherwise process wood and wood-derived particulate and other cellulosic materials used as a substitute or supplement for wood.

8.1.2 Prescriptive Requirements. Facilities that are not designed pursuant to the performance-based design methods outlined in Chapter 5 shall comply with the deemed to satisfy prescriptive criteria provided by this chapter.

8.1.3 Fire Protection and Explosion Suppression Systems. Where required, fire protection and explosion suppression systems shall be provided in accordance with Chapter 9.

8.2 Particulate Conveying and Dust Collection Systems.

8.2.1* Hazard Determination. The hazard associated with the particulate conveying system shall be determined through a hazard analysis.

8.2.1.1 The analysis of the fire and deflagration hazard shall address the moisture content and particle size distribution of the particulate comprising the process stream downstream of each point of material entry to determine whether the material is green, dry nondeflagrable, or deflagrable.

8.2.1.2 The analysis of the fire and deflagration hazard shall identify the minimum explosible concentration (MEC) for all deflagrable material.

8.2.1.3 Fire and deflagration hazards shall be deemed nonexistent where only green material is collected or conveyed and construction of the equipment handling and storing the material is all noncombustible.

Copyright 2014 National Fire Protection Association (NFPA). Licensed, by agreement, for individual use and download on October 4, 2014 to LEADER and READER for designated user PATTARAPORN SRITRAKOOL. No other reproduction or transmission in any form permitted without written permission of NFPA. For inquires or to report unauthorized use, contact licensing@nfpa.org.

8.2.1.4* A fire hazard shall be deemed to exist in the system wherever dry wood particulate is collected or conveyed or wherever components of the conveying system are constructed of combustible materials.

8.2.1.5* In addition to the fire hazard, a deflagration hazard shall also be deemed to exist where deflagrable wood dust is, or could be, suspended in air during operation at a maximum concentration above 25 percent of the MEC.

8.2.2 Pneumatic Conveying and Dust Collection Systems.

8.2.2.1 General Requirements.

8.2.2.1.1 Pneumatic conveying systems shall be designed in accordance with NFPA 654, *Standard for the Prevention of Fire and Dust Explosions from the Manufacturing, Processing, and Handling of Combustible Particulate Solids*, except as modified by this standard.

8.2.2.1.2* Woodworking pneumatic conveying systems shall be restricted to handling wood residues; under no circumstances shall another operation that generates sparks, such as from grinding wheels, or flammable vapors, such as from a finishing operation, be connected to a woodworking pneumatic conveying system.

8.2.2.1.3 Once a system airflow has been properly balanced, additional pickup points, duct modifications, and modification of balancing damper settings shall not be made without ensuring that the remaining portions of the system still have sufficient capture and conveying air velocities for their intended function.

8.2.2.1.4* Dust collection systems shall be in operation whenever equipment connected to the system for the control of fugitive dust is processing wood stock.

8.2.2.1.5* Every section of the collection system shall be sized for not less than the minimum air velocity and volume required to collect and transport the material through the ducting and into the collection equipment.

8.2.2.2 Duct System.

8.2.2.2.1 General Requirements.

8.2.2.2.1.1 Ductwork shall be metallic.

Exception: Flexible ducting shall be permitted for final machine connection in a length not exceeding the minimum required for machine operation.

8.2.2.2.1.2* Nonconductive ducts such as PVC pipes shall not be permitted.

8.2.2.2.1.3 Unless equipped with drainage, horizontal ductwork shall be capable of supporting the weight of the duct half-filled with material. Where sprinkler protection is provided in the duct, horizontal ductwork shall be capable of supporting the weight of the system plus the weight of the duct half-filled with water or material being conveyed, whichever has the higher density.

8.2.2.2.1.4 Ductwork shall be protected from corrosion.

8.2.2.2.1.5 Dust collection air velocity and volume shall be calculated according to 8.2.2.2.1.5(A) and 8.2.2.2.1.5(B).

(A) The capacity of the system shall be calculated on the basis of all hoods and other openings connected to the system being open or equipped with means to ensure minimum conveying velocity of 8.2.2.1.5 in all sections of the system.

(B) Floor sweeps, which are normally closed and are only opened on an occasional basis to facilitate housekeeping, shall be permitted to be excluded from the air flow calculations for the system.

8.2.2.2.1.6* Where dampers or gates are used for individual equipment, the volume and velocity resulting from the operation of such dampers or gates shall not reduce the system velocity below the design minimum.

8.2.2.2.1.7 Ducts with a circular cross-section shall be used.

Exception: Transition to a noncircular cross-section of equal area shall be permitted where ducts connect to other equipment or where external obstructions necessitate a noncircular cross-section.

8.2.2.2.1.8 Ductwork shall be bonded and grounded in accordance with 7.9.2(1).

8.2.2.2.1.9* Hazard Determination. The dust accumulation hazard associated with the duct system shall be determined by means of a hazard analysis.

(A)* For duct systems subject to dust accumulation, access doors, openings, or removable sections of ductwork shall be provided in accordance with 8.2.2.2.1.9(B) through 8.2.2.2.1.9(E).

(B) Access doors, openings, or removable sections of ductwork shall be provided to allow inspection, cleaning, maintenance, and fire department access.

(C) Access doors, openings, or removable sections of ductwork shall be designed and maintained to prevent dust leaks and maintain the integrity of the duct.

(D) Access doors, openings, or removable sections of ductwork that are not specifically designed for deflagration venting shall not be considered as providing that function.

(E) Access doors, openings, or removable sections of ductwork shall be bonded and grounded.

8.2.2.2.2* Ducts with a Fire Hazard. Ducts conveying dry material released by equipment having a high frequency of generated sparks shall be designed and constructed in accordance with one of the following:

(1) Equipped with a listed spark detection and extinguishing system installed downstream from the last material entry point and upstream of any collection equipment
(2)* Equipped with a listed spark detection system actuating a high-speed abort gate, provided the abort gate can operate fast enough to intercept and divert burning embers to atmosphere before they can enter any collection or storage equipment
(3) If conveying material to locations representing minimal exposure to personnel and the public at large, equipped without spark detection and extinguishing systems but subject to a risk analysis acceptable to the authority having jurisdiction

8.2.2.2.3* Ducts with a Deflagration Hazard. Ducts having a deflagration hazard shall be designed, constructed, and installed pursuant to one of the following:

(1)* Ducts, including all access hatches, shall be constructed of metal of sufficient strength to withstand the maximum unvented deflagration pressure of the material being conveyed.

Copyright 2014 National Fire Protection Association (NFPA). Licensed, by agreement, for individual use and download on October 4, 2014 to LEADER and READER for designated user PATTARAPORN SRITRAKOOL. No other reproduction or transmission in any form permitted without written permission of NFPA. For inquires or to report unauthorized use, contact licensing@nfpa.org.

(2)*Metal ducts shall be protected by a listed deflagration suppression system that has a design strength exceeding the maximum reduced deflagration pressure.
(3)*Metal ducts shall be located indoors and equipped with adequate deflagration relief vents that have relief pipes, not exceeding 6 m (20 ft) in length, extending to safe areas outside the building and that have a design strength exceeding the maximum reduced deflagration pressure.
(4)*Metal ducts shall be located indoors and equipped with adequate deflagration relief vents that exhaust through listed flame-quenching devices and have a design strength exceeding the maximum reduced deflagration pressure.
(5)*Metal ducts shall be located outdoors and equipped with adequate deflagration vents and shall have a design strength exceeding the maximum reduced deflagration pressure.
(6)*Metal ducts that are located outdoors and have weaker construction shall be permitted to be used subject to a risk analysis acceptable to the authority having jurisdiction.

8.2.2.2.4 Metal ducts located indoors shall be equipped with deflagration relief vents and vent ducts designed, installed, and maintained in accordance with NFPA 68, *Standard on Explosion Protection by Deflagration Venting*, and shall have a design strength exceeding the maximum reduced deflagration pressure.

8.2.2.2.5 Metal ducts located indoors shall be equipped with deflagration relief vents and vent ducts designed, installed, and maintained in accordance with NFPA 68, *Standard on Explosion Protection by Deflagration Venting*, that exhaust through listed flame-quenching devices and shall have a design strength exceeding the maximum reduced deflagration pressure.

8.2.2.2.6 Metal ducts located outdoors shall be equipped with deflagration relief vents designed, installed, and maintained in accordance with NFPA 68, *Standard on Explosion Protection by Deflagration Venting*, and shall have a design strength exceeding the maximum reduced deflagration pressure.

8.2.2.3 Hoods and Enclosures.

8.2.2.3.1 Hoods or enclosures shall be designed and located such that the wood dust or particulate generated will fall, be projected, or be drawn into the hoods or enclosures so as to minimize fugitive dust emissions without interfering with the safe and satisfactory operation of the machine.

8.2.2.3.2 All hoods and enclosures shall be of noncombustible construction unless protected with automatic sprinklers installed in accordance with NFPA 13, *Standard for the Installation of Sprinkler Systems*.

8.2.2.3.3 The rate of airflow into every hood and enclosure shall be sufficient to capture the wood particulate and carry it into the duct system.

8.2.2.4 Fans or Blowers (Air-Moving Devices).

8.2.2.4.1* Fans or blowers shall be of appropriate type and sufficient capacity to maintain the required rate of airflow in all parts of the system.

8.2.2.4.2 Fans and blowers shall be located in one of the following locations:

(1)*On the clean air side of dust collectors, regardless of the moisture content or particle size of the material being conveyed
(2)*Upstream of the dust collector when the material being conveyed has a moisture content in excess of 25 percent (wet basis)
(3) Upstream of the dust collector when the material being conveyed has a moisture content of less than 25 percent (wet basis) and a concentration of sub-420 micron particulate (less than 25 percent of the MEC) and the duct downstream of the fan is equipped with a listed spark detection extinguishing system and an abort gate to divert material to a safe location
(4) Upstream of the dust collector when the material being conveyed has a moisture content of less than 25 percent (wet basis) and a concentration of sub-420 micron particulate (in excess of 25 percent of the MEC) and the duct and dust collector are equipped with either deflagration relief venting or deflagration suppression systems
(5) Upstream of an enclosureless dust collector, regardless of the moisture content or particulate size of the material being conveyed
(6) Upstream of outdoor cyclone collectors receiving knife planer shavings, when the fan and the cyclone are located outdoors and exhaust to outdoor atmosphere

8.2.2.4.3* When fans with a deflagration hazard are arranged as material-handling fans on ducts, the fan housing shall meet the same design strength criteria required of the duct in 8.2.2.2.3.

8.2.2.5 Dust Collectors.

8.2.2.5.1 General Requirements.

8.2.2.5.1.1 The system shall be provided with collection equipment of sufficient size and capacity to maintain the required airflow and efficiently separate the wood dust from the air before the air is exhausted.

8.2.2.5.1.2 The collection equipment shall be designed and constructed entirely of noncombustible material suitable for the use intended.

Exception: Filter bags and explosion vent diaphragms fabricated from combustible material shall be permitted.

8.2.2.5.1.3* Dust collectors shall have independent supporting structures capable of supporting the weight of the following:

(1) Collector
(2) Material being collected
(3) Any water from fire-extinguishing systems that will not readily drain from the system

8.2.2.5.1.4* Dust collectors shall be located in accordance with one of the following:

(1) Outside of buildings
(2) Indoors when deemed to have no fire or deflagration hazard
(3) Indoors for dust collectors with only a fire hazard when protected in accordance with this standard
(4) Indoors when equipped with listed deflagration suppression system
(5) Indoors when equipped with deflagration relief vents with relief pipes extending to safe areas outside the building and the collector meets the strength requirement of this standard
(6) Indoors when equipped with deflagration relief vents exhausting through listed flame-quenching devices and the collector meets the strength requirement of this standard
(7)*Indoors for enclosureless dust collectors meeting all of the following criteria:
  (a) The collector is used only for dust pickup from wood processing machinery (i.e., no metal grinders and so forth).

Copyright 2014 National Fire Protection Association (NFPA). Licensed, by agreement, for individual use and download on October 4, 2014 to LEADER and READER for designated user PATTARAPORN SRITRAKOOL. No other reproduction or transmission in any form permitted without written permission of NFPA. For inquires or to report unauthorized use, contact licensing@nfpa.org.

(b) The collector is not used on sanders, molders, or abrasive planers having mechanical material feeds through the machine.
(c) Each collector has a maximum air-handling capacity of 2.4 m^3/sec (5000 cfm).
(d) The fan motor is of a totally enclosed, fan-cooled design.
(e) The collected dust is removed daily or more frequently if necessary to ensure efficient operation.
(f) The collector is located at least 6.1 m (20 ft) from any means of egress or area routinely occupied by personnel.
(g) Multiple collectors in the same room are separated from each other by at least 6.1 m (20 ft).

8.2.2.5.2* Dust Collectors with Fire Hazards. Where automatic sprinkler protection is provided in dust collectors, it shall be hydraulically designed to provide a minimum density of 8.15 L/min/m^2 (0.20 gpm/ft^2) over the horizontal projected area of the piece of equipment.

Exception: Enclosureless dust collectors meeting all of the following criteria:

(1) The collector is used only for dust pickup from wood processing machinery (i.e., no metal grinders and so forth).
(2) The collector is not used on sanders or abrasive planers having mechanical material feeds.
(3) Each collector has a maximum air-handling capacity of 2.4 m^3/sec (5000 cfm).
(4) The fan motor is a totally enclosed, fan-cooled design.
(5) The collected dust is removed from the filter media daily or more frequently if necessary to ensure efficient operation.
(6) The collector is located at least 6.1 m (20 ft) from any means of egress or area routinely occupied by personnel.
(7) Multiple collectors in the same room are separated from each other by at least 6.1 m (20 ft).

8.2.2.5.3* Dust Collectors with Deflagration Hazards. Dust collectors with a deflagration hazard shall be designed and constructed in accordance with one of the following options:

(1)*Dust collectors constructed of welded steel or other noncombustible material of sufficient strength to withstand the maximum unvented deflagration pressure of the material being collected
(2)*Dust collectors protected by a listed deflagration suppression system in accordance with NFPA 69, *Standard on Explosion Prevention Systems*, with a design strength exceeding the maximum reduced deflagration pressure of the material being collected
(3)*Dust collectors equipped with deflagration relief vents in accordance with NFPA 68, *Standard on Explosion Protection by Deflagration Venting*, with a design strength exceeding the maximum reduced deflagration pressure of the material being collected
(4) Dust collectors located outdoors and representing minimal exposure to personnel and the public at large with weaker construction, subject to a risk analysis acceptable to the authority having jurisdiction

Exception: Enclosureless dust collectors of any strength suitable for the use intended shall be permitted without any additional explosion protection requirements.

8.2.2.6 Recycling of Air-Material Separator Exhaust. Recycling of air-material separator exhaust to buildings shall be permitted if the provisions of 8.2.2.6.1 through 8.2.2.6.4 are met.

8.2.2.6.1* The system shall be designed to prevent return of dust with a minimum efficiency of 99.9 percent at 10 µm.

8.2.2.6.2 Recycling of air-material separator exhaust to the building shall not be permitted under any circumstances where combustible gases, vapors, or hybrid mixtures are involved.

8.2.2.6.3 Recycling of air-material separator exhaust to the building shall not be permitted when the recycled stream reduces the concentration of oxygen below 19.5 percent by volume in the work area.

8.2.2.6.4* Air from air-material separators or dust collectors deemed to have a fire hazard shall meet the provisions of 8.2.2.6.4.1, 8.2.2.6.4.2, 8.2.2.6.4.3, or 8.2.2.6.4.4.

8.2.2.6.4.1* For dust collection systems of capacity less than or equal to 2.4 m^3/sec (5000 cfm), one of the following shall apply:

(1) The system shall be equipped with listed spark detection, designed and installed in conformance with the relevant sections of *NFPA 72, National Fire Alarm and Signaling Code*, located on the duct upstream from the dust collector and downstream from the last material entry point, connected directly to a listed spark extinguishing system, designed and installed in conformance with NFPA 15, *Standard for Water Spray Fixed Systems for Fire Protection*, or
(2) The system shall be protected in accordance with 8.2.2.6.4.2.

8.2.2.6.4.2* For dust collection systems of capacity greater than 2.4 m^3/sec (5000 cfm), the following shall apply:

(1) The system shall be equipped with a listed spark detection system, designed and installed in conformance with the relevant sections of *NFPA 72, National Fire Alarm and Signaling Code*, located on the duct upstream from the dust collector and downstream from the last material entry point, or on the exhaust side of the dust collector, to detect fire entering or occurring within the dust collector, respectively, and
(2) The exhaust air duct conveying the recycled air back to the building shall be equipped with a high-speed abort gate activated by the spark detector in 8.2.2.6.4.2(1), and the abort gate shall be sufficiently fast to intercept and divert any burning material to atmosphere before it can enter the plant.
(3)*The abort gate is provided with a manual reset so that, after it has aborted, it can be reset to the normal position only by manual interaction at the damper; automatic or remote reset shall not be allowed. A powered reset is acceptable if it can be activated only by manual interaction at the damper location.

8.2.2.6.4.3 Air from enclosureless dust collectors meeting the requirements of 8.2.2.5.1.4(7) shall be permitted to be exhausted into the building.

8.2.2.6.4.4 Air from cyclone pre-cleaners, located outside the building and having a capacity of 2.4 m^3/sec (5000 cfm) or less shall be permitted to be ducted directly to enclosureless dust collectors located within the building without provisions.

8.2.3 Mechanical Conveying Systems.

8.2.3.1 General Requirements.

8.2.3.1.1 All equipment shall be designed, installed, and operated to maintain alignment and lubrication to avoid excessive heat buildup from friction, hot bearings, and so forth.

Copyright 2014 National Fire Protection Association (NFPA). Licensed, by agreement, for individual use and download on October 4, 2014 to LEADER and READER for designated user PATTARAPORN SRITRAKOOL. No other reproduction or transmission in any form permitted without written permission of NFPA. For inquires or to report unauthorized use, contact licensing@nfpa.org.

8.2.3.1.2* All equipment shall be designed to minimize fugitive dust emissions from the equipment.

8.2.3.1.3 Dusttight ball or roller bearings shall be used wherever practicable.

8.2.3.1.4 All bearings and bushings shall be dusttight.

8.2.3.1.5* Bearings and bushings shall be located outside the equipment.

Exception: Bearings and bushings shall be permitted inside equipment where there is no other practical location.

8.2.3.1.6 Shaft seals shall be provided where rotating shafts penetrate equipment walls.

8.2.3.1.7* Access hatches and removable equipment covers shall be tight fitting and securely fastened for dusttight operation.

8.2.3.2* Mechanical Conveying Equipment with a Fire Hazard. Where provided, sprinkler protection for rubber belt and other conveyors shall be designed, installed, and maintained in accordance with NFPA 13, *Standard for the Installation of Sprinkler Systems.*

8.2.3.3 Mechanical Conveying Equipment with a Deflagration Hazard.

8.2.3.3.1 Enclosed conveyors with a deflagration hazard shall comply with the criteria in 8.2.2.2.3.

8.2.3.3.2* Access hatches and removable equipment covers shall be secured with fasteners capable of withstanding design deflagration pressure in accordance with 8.2.2.2.3.

Exception: Where the hatch or cover is designed to also function as a deflagration relief vent.

8.2.4* Conveying System Isolation.

8.2.4.1 Conveying systems with fire and deflagration hazards shall be isolated to prevent propagation of fire and deflagration both upstream and downstream into occupied areas or other critical process equipment. *(See Annex D.)*

Exception No. 1: Small enclosureless dust collection systems shall be permitted to operate without isolation if they meet all the requirements of 8.2.2.2.3.

Exception No. 2: Conveying systems shall be permitted to operate without isolation subject to a risk analysis acceptable to the authority having jurisdiction.

8.2.4.2* Isolation devices shall be listed for the use intended.

Exception: Where no listed equipment is available for the necessary isolation application, nonlisted equipment that has loss history proving its effectiveness shall be acceptable.

8.2.4.3 Ducts shall be isolated to prevent propagation of deflagration to other vessels.

8.2.4.4 Where provided, explosion isolation devices shall be installed, inspected, and maintained in accordance with Chapter 15 of NFPA 69, *Standard on Explosion Prevention Systems.*

8.3* Thermal Oil Heating Systems.

8.3.1 Hazard Determination and Design Criteria. Thermal oil heating systems shall be designed, operated, and maintained such that risk of thermal oil spills is minimized, and any fires or explosions resulting from thermal oil spills are extinguished or controlled in a manner that will not cause unacceptable property damage or interruption of production, or unacceptable risk to operating personnel or the public at large.

8.3.1.1 The hazard posed by the thermal oil system, when the oil is used as heat transfer fluid (HTF), shall be determined on the basis of the largest most credible spill quantity of thermal oil, taking into account the following:

(1)*Total quantity of thermal oil in the system
(2)*Flow rate of thermal oil through system loops
(3)*System instrumentation and alarm features that would detect loss of fluid from the system
(4)*System automatic controls and interlocks, and/or presence of trained operators, that can reliably shut down pumping and/or isolate portions of the system to limit the amount of thermal oil spilled
(5)*Spatial orientation of thermal oil piping and system components that would allow isolated portions of the system to drain their trapped quantities of thermal oil by gravity

8.3.1.2* The hazard analysis shall define the location, size, and extent of the maximum most credible thermal oil spill, taking into account the following:

(1) Diversion of a spill due to floor or ground slope
(2) Containment of a spill by pits, curbs, and dikes
(3) Relocation of a spill from the immediate area by drains

8.3.1.3 The hazard analysis shall define the fire intensity and duration of the maximum most credible thermal oil spill defined from the analyses in 8.3.1.1 and 8.3.1.2, taking into account the following:

(1) Rate at which oil will be spilled
(2) Rate at which oil will drain away
(3)*Rate at which oil will be consumed during burning
(4) Heat release rate of the oil spill fire

8.3.1.4 The hazard analysis shall determine the extent of property damage, loss of production, and risk of injury to operating personnel or the public at large from a fire involving the maximum most credible thermal oil spill, taking into account the following:

(1) Fire resistance of the exposed equipment or structures
(2) Presence and adequacy of automatic sprinklers or other special extinguishing systems for the duration of the fire
(3) Presence of fire alarms and means of egress from the vicinity of the fire

8.3.1.5 For vaporizing thermal oil systems, the risk analysis shall additionally determine the extent of property damage, loss of production, and risk of injury to operating personnel or the public at large from a room explosion involving the sudden release of thermal oil vapor or thermal oil heated above its atmospheric boiling point.

8.3.2 Deemed to Satisfy Prescriptive Criteria. Thermal oil systems that are not designed pursuant to the performance objectives and design criteria in 8.3.1 shall comply with the deemed to satisfy prescriptive criteria of this subsection.

8.3.2.1* General Criteria. Thermal oil shall not be permitted to be pumped throughout a facility to provide building heat except under one of the following conditions:

(1) All thermal oil piping and points of connection to valves, heat exchangers, or other equipment have welded connections.
(2) Areas where mechanical joints for thermal oil piping exist are protected with a sprinkler system designed to control a fire in the largest credible thermal oil spill.

Copyright 2014 National Fire Protection Association (NFPA). Licensed, by agreement, for individual use and download on October 4, 2014 to LEADER and READER for designated user PATTARAPORN SRITRAKOOL. No other reproduction or transmission in any form permitted without written permission of NFPA. For inquires or to report unauthorized use, contact licensing@nfpa.org.

8.3.2.2 Location and Construction.

8.3.2.2.1 Thermal oil heaters shall be physically separated from adjacent manufacturing areas by locating them in one the following areas (in order of preference):

(1) Outdoors where drainage is certain to be away from a building
(2) In a detached building
(3) In a building attached to an outside wall of the manufacturing building with the common wall having a 1-hour fire rating
(4) In a cutoff room at an outside wall of the main production building with the three interior walls having a 1-hour fire rating

Exception: Nonvaporizing thermal oil heaters with an oil capacity less than 1893 L (500 gal) shall be permitted in manufacturing areas if an oil spill at the heater is controlled pursuant to 8.3.2.2.3.

8.3.2.2.2* A vaporizing thermal oil heater shall be located pursuant to the following:

(1) In compliance with 8.3.2.2.1
(2) In a room or building housing having damage-limiting construction to vent an explosion toward a safe area

8.3.2.2.3 Curbs, dikes, or floor slope combined with drainage to a safe location shall be provided around indoor thermal oil system components (e.g., storage tanks and pump heat exchangers).

Exception: Drainage shall not be required when a properly designed automatic sprinkler system is provided over the containment area and the containment area is designed to hold the largest credible oil spill plus 20 minutes of sprinkler discharge.

8.3.2.2.4* Where the utilization of ground slope will not increase hazard, ground slope shall be provided under outdoor thermal oil system components that utilize nonwelded mechanical connections to thermal oil circulation piping to divert oil spills to a safe location away from the thermal oil equipment or adjacent buildings.

8.3.2.2.5* Process control rooms, which are expected to be manned in an emergency, shall be separated from the thermal oil utilization equipment by 1-hour fire-rated construction.

8.3.2.2.6 At least one path of egress from the control room shall be through an area not susceptible to a fire involving thermal oil.

8.3.2.3 Heaters.

8.3.2.3.1 Heaters operating at gauge pressures exceeding 103 kPa (15 psi) shall be designed and operated in conformance with the ASME *Boiler and Pressure Vessel Code*.

8.3.2.3.2* Pressure relief devices, when provided, shall be piped to discharge oil or vapor to a safe location.

8.3.2.3.3 Fire detection systems, fire extinguishing systems, or both for an internal heater fire shall be in accordance with Chapter 9.

8.3.2.4 Piping.

8.3.2.4.1* Piping shall be securely supported to maintain adequate clearance from combustible construction or other combustible materials.

8.3.2.4.2* Welded pipe connections shall be used throughout a thermal oil piping system.

Exception: Bolted mechanical joints shall be permitted to be used at pumps, valves, and equipment connections if both of the following conditions are met:

(1) Areas where mechanical joints exist are protected with a sprinkler system designed to control a fire involving the largest credible thermal oil spill.
(2) Mechanical joints are insulated and shielded to prevent a leak from becoming a spray fire, and the shielding has a drip hole at the low point to facilitate detection of leaking joints.

8.3.2.4.3* Where necessary to reduce the largest credible thermal oil spill to an acceptable level, provisions shall be made to isolate the supply and return piping to and from utilization equipment.

8.3.2.4.4 Copper, cast iron, or plastic piping shall not be used.

8.3.2.4.5 For systems operating above gauge pressures of 103 kPa (15 psi), pipe materials and types shall be in accordance with ANSI/ASME B31.1, *Power Piping*, or ANSI/ASME B31.3, *Chemical Plant and Petroleum Refinery Piping*, as applicable.

8.3.2.4.6* Piping that is routed through production areas where airborne wood particulate can collect on thermal oil piping shall be insulated to keep surface temperatures below the maximum permitted by 7.4.1.

8.3.2.5 Expansion Tank.

8.3.2.5.1* Where used as other than an atmospheric tank, expansion tanks shall be designed in accordance with Section VIII of the ASME *Boiler and Pressure Vessel Code*.

8.3.2.5.2* Expansion tanks that have a breather vent, overflow drain, or pressure relief valve shall have the discharge from these openings piped to a safe location.

8.3.2.5.3* When necessary to reduce the largest credible thermal oil spill to an acceptable level, the expansion tank shall be provided with a remotely operable drain line that allows the expansion tank to be drained to a safe location.

8.3.2.5.4* An automatic expansion tank refill system to maintain the thermal oil level in the expansion tank shall not be permitted.

8.3.2.5.5* Expansion tanks on vaporizing systems or on nonvaporizing systems that heat the oil to within 50 degrees of its atmospheric boiling point shall be provided with an inert gas blanket in the expansion tank vapor space.

8.3.2.5.5.1 The inert gas blanket shall operate at a pressure between 103 kPa and 172 kPa (15 psi and 25 psi) above the vapor pressure of the heated oil.

8.3.2.5.5.2 A low-pressure interlock shall be provided that will shut off the heater fuel source if the inert gas pressure drops to less than 103 kPa (15 psi) above the hot oil vapor pressure.

8.3.2.6* Storage Tanks. Both indoor and outdoor aboveground thermal oil storage tanks shall be constructed, located, and arranged in accordance with NFPA 30, *Flammable and Combustible Liquids Code*.

Copyright 2014 National Fire Protection Association (NFPA). Licensed, by agreement, for individual use and download on October 4, 2014 to LEADER and READER for designated user PATTARAPORN SRITRAKOOL. No other reproduction or transmission in any form permitted without written permission of NFPA. For inquires or to report unauthorized use, contact licensing@nfpa.org.

8.3.2.7 Safety Controls and Interlocks.

8.3.2.7.1* All thermal oil system emergency shutdown and isolation devices intended to limit the largest credible thermal oil spill shall be interlocked to actuate when any one of the following conditions exist:

(1) Automatic sprinkler system water flow in any area containing thermal oil heaters, pumps, utilization equipment, or thermal oil piping that is not fully welded at all connecting joints
(2) Activation of a fire detection system in any area containing thermal oil heaters, pumps, utilization equipment, or thermal oil piping that is not fully welded at all connecting joints
(3) Activation of the thermal oil leak detection system

Exception No. 1: If an area has both a fire detection system and an automatic sprinkler system, only one of these shall be required to activate the automatic shutdown and isolation.

Exception No. 2: If the area where the fire detection, sprinkler water flow, or thermal oil loss can be positively identified by the arrangement and/or control system of the detection devices, only those automatic shutdown and isolation devices required to stop thermal oil flow into and out of the affected area shall be required to be interlocked for automatic actuation.

Exception No. 3: If an area subject to a thermal oil spill is under constant observation by operators or personnel who are trained to respond and have access authority to manually activate the required thermal oil system shutdown and isolation, then automatic shutdown by sprinkler water flow shall not be required for that area.

8.3.2.7.2* An accessible, manual, remote emergency shutoff switch shall be provided that is capable of safely shutting down and isolating the heat transfer system in the configuration required to limit the largest credible thermal oil spill.

8.3.2.8 Fuel Burner Controls and Interlocks.

8.3.2.8.1 Oil or gas-fired heaters shall be designed and installed in accordance with the applicable requirements of NFPA 85, *Boiler and Combustion Systems Hazards Code*.

8.3.2.8.2 Wood dust suspension burners shall be designed and installed in accordance with the applicable requirements of NFPA 85, *Boiler and Combustion Systems Hazards Code*.

8.3.2.8.3* Heaters that burn wood waste in a fluidized bed or on a grate shall provide a means to prevent the accumulation of explosible concentrations of combustibles in the heater or in any stack gas utilization equipment, following a shutdown with unburned fuel in the heater.

8.3.2.8.4* If stack gas from the thermal oil heater is recovered to provide auxiliary base load heat for other equipment (e.g., rotary dryers), a means shall be provided to ensure that all equipment is properly purged prior to an attempt being made to ignite a burner on any of the interconnected equipment.

8.3.2.8.4.1 Temperature and pressure monitoring shall be required for dryer exhaust recirculation into the thermal oil heater.

8.3.2.8.4.2 Temperature and pressure monitoring shall be required for flue gas recycling into the thermal oil heater.

8.3.2.8.5 Where solid fuel central energy systems provide hot air stream to more than one user, one of which is a thermal oil heating system, they shall be permitted to be designed to reduce the hot air stream feeding the thermal oil heating system, without the need to shut down the fuel source.

8.3.2.8.6* Instrumentation and interlocks shall be provided to sound an alarm and automatically shut off the fuel source or the heat source to the thermal oil heater when any of the following conditions are detected:

(1) Low thermal oil flow or pressure at the heater outlet
(2) High thermal oil temperature or pressure at the heater outlet
(3) Low oil level in expansion tank and, if provided, any other signal indicating loss of thermal oil from the system
(4) Low liquid thermal oil level in heater (vaporizing systems only)
(5) Activation of a fire detection system, extinguishing system, or both, for the heater heat exchanger, if provided

8.3.2.9 Operational Considerations.

8.3.2.9.1 Any and all system leaks that are discovered shall be promptly corrected with permanent repairs, regardless of the size of the leak.

8.3.2.9.2 Any spilled oil shall be cleaned up promptly.

8.3.2.9.3 Any pipe or equipment insulation that is discovered to be oil-soaked shall be promptly removed and replaced with clean, oil-free insulation.

8.3.2.9.4* If it is suspected that the material being heated is infiltrating into the thermal oil loop, the system shall be immediately shut down to find and repair the leakage.

8.3.2.9.5* Operators shall be trained at least annually in proper operation of the thermal oil system, including recognition and proper response to upset conditions that could lead to dangerous situations.

8.3.2.9.6 Safety interlocks shall be inspected, tested, and calibrated at least annually to keep them in proper operating condition.

8.3.2.9.7* The physical properties of the thermal oil shall be tested and documented annually, with replacement of all oil in the system when recommended by the oil manufacturer.

8.3.2.10* Fire Protection.

8.3.2.10.1 Automatic sprinkler protection meeting the requirements of NFPA 13, *Standard for the Installation of Sprinkler Systems*, for Extra Hazard Group 1 occupancies shall be provided for building areas containing heat transfer system heaters, vaporizers, equipment using thermal oil, plenums, or any other areas where a hot oil spill could accumulate.

8.3.2.10.2* Heaters shall be provided with a means to detect and automatically extinguish a thermal oil spill fire in the fire box or heat exchanger section where spilled oil would collect.

Exception: An automatic extinguishing system shall not be required where one of the following conditions exists:

(1) Systems contain less than 7571 L (2000 gal) of thermal oil, subject to a risk analysis that is acceptable to the authority having jurisdiction.
(2) Heaters have a fire detection system interlocked to physically isolate the heater from the external thermal oil piping.
(3) Instrumentation is present to alert operators of an oil fire in the heater and operators constantly monitor conditions in the heater and are trained to actuate a manual extinguishing system.

Copyright 2014 National Fire Protection Association (NFPA). Licensed, by agreement, for individual use and download on October 4, 2014 to LEADER and READER for designated user PATTARAPORN SRITRAKOOL. No other reproduction or transmission in any form permitted without written permission of NFPA. For inquires or to report unauthorized use, contact licensing@nfpa.org.

8.3.2.10.3* Activation of a heater fire extinguishing system shall automatically stop the primary thermal oil circulation pumps.

Exception: Automatic shutdown of primary circulation pumps shall not be required when both of the following conditions exist:

(1) The heater contains a bed of wood waste fuel or the refractory inside the heater can retain enough heat to cause thermal oil breakdown and tube fouling if fluid circulation through the unit is stopped.
(2) The primary loop system has an emergency bypass with an oil cooling heat exchanger to rapidly reduce oil temperature.

8.4* Particulate Size Reduction Equipment.

8.4.1 Hazard Analysis and Design Criteria.

8.4.1.1* Unless the particulate size reduction equipment is strictly dedicated to handling green material or is pressurized with steam, it shall be considered a high-frequency ignition source.

8.4.1.2 The hazard associated with the particle size reduction equipment shall be based on the physical properties of particulate, including the following:

(1) Minimum explosible concentration
(2) Minimum ignition energy (MIE)
(3) Particle size distribution
(4) Moisture content as received and as tested
(5) Maximum explosion pressure at optimum concentration
(6) Maximum rate of pressure rise at optimum concentration
(7) K_{St} (normalized rate of pressure rise) as defined in ASTM E 1226, *Standard Test Method for Pressure and Rate of Pressure Rise for Combustible Dusts*
(8) Layer ignition temperature
(9) Dust cloud ignition temperature
(10) Limiting oxidant concentration (LOC) to prevent ignition
(11) Electrical resistivity
(12) Charge relaxation time
(13) Chargeability

8.4.2 Deemed to Satisfy Prescriptive Requirements.

8.4.2.1 Hazard Analysis. The fire and deflagration potential of each piece of particulate size reduction machinery shall be determined by a hazard analysis as outlined in 8.4.1.

8.4.2.2 General Requirements.

8.4.2.2.1* All equipment shall be designed in accordance with 8.2.3.1.

8.4.2.2.2* Foreign material shall be removed from the process material feed into all particulate size reduction equipment by permanent magnet or self-cleaning electromagnet-type magnetic separators, or by pneumatic separators, or by both.

8.4.2.3* Size Reduction Equipment with a Fire Hazard. Downstream equipment shall be protected against ignitions caused by size reduction equipment in accordance with Section 8.2.

8.4.2.4* Size Reduction Equipment with a Deflagration Hazard.

8.4.2.4.1 Size reduction equipment shall be located outdoors.

Exception: Size reduction equipment shall be permitted indoors if located in a detached building or separated from other production areas by damage-limiting construction.

8.4.2.4.2* Size reduction equipment shall be constructed in accordance with one of the following:

(1) An enclosure shall be constructed of welded steel or other noncombustible material of sufficient strength to withstand the maximum unvented explosion pressure of the processed material.
(2) An enclosure shall be constructed of noncombustible material, protected by a listed explosion suppression system with a design strength exceeding the maximum reduced explosion pressure of the processed material.
(3) An enclosure constructed of noncombustible material, equipped with adequate deflagration relief vents having relief pipes extending outdoors or discharging through listed flame-quenching devices, shall have a design strength exceeding the maximum reduced explosion pressure of the processed material.

8.4.2.4.3 Rooms containing the size reduction equipment shall be considered a Class II, Division 2 hazardous area as defined in Article 500 of *NFPA 70, National Electrical Code.*

Exception: When fugitive dust is not cleaned off building and equipment structures and is allowed to accumulate to depths exceeding 3.2 mm (⅛ in.) thick, the room shall be considered a Class II, Division 1 hazardous area as defined in Article 500 of NFPA 70, National Electrical Code.

8.5 Panel Product Manufacturing Machinery.

8.5.1 Panel formers utilizing dry wood or other cellulosic materials, consisting of particles or fiber of various sizes, shall be provided with dust control to minimize dust clouds within the enclosure.

8.5.2 Bearings, rollers, and bushings shall be in accordance with 8.2.3.1.

8.5.3 Foreign material shall be removed from the process material feed into all particulate size reduction equipment by permanent magnet or self-cleaning electromagnet-type magnetic separators, or by pneumatic separators, or by both.

8.5.4 Dust. All dust-producing equipment shall be designed for dusttight operation, or the equipment and dust-producing operations shall be provided with dusttight hoods or enclosures that comply with the requirements of Section 8.2.

8.6 Dryer Systems.

8.6.1* Veneer and Fiberboard Dryers.

8.6.1.1* Automatic water spray deluge protection shall be provided for horizontal tray dryers, air plenums, and air exhaust stacks.

Exception: Protection can be omitted from portions of the dryer where the following conditions exist:

(1) The material in the dryer has a moisture content greater than 40 percent (wet basis), no thermal oil heat exchangers are in the dryer, and combustible debris or deposits do not accumulate inside the dryer.
(2) The dryer has two or fewer trays, no thermal oil heat exchangers, and combustible debris or deposits do not accumulate inside the dryer.

8.6.1.2 Where two or more deluge systems are provided in the same dryer, the water demand shall be designed for two systems operating at one time. *(See Annex E.)*

8.6.1.3* The interior of the dryer shall be regularly inspected and cleaned, if necessary, to keep dust and resin deposits to less than 3.2 mm (⅛ in.) thick.

Copyright 2014 National Fire Protection Association (NFPA). Licensed, by agreement, for individual use and download on October 4, 2014 to LEADER and READER for designated user PATTARAPORN SRITRAKOOL. No other reproduction or transmission in any form permitted without written permission of NFPA. For inquires or to report unauthorized use, contact licensing@nfpa.org.

8.6.1.4* The ceiling areas above these dryers shall receive regular cleaning, especially around roof exhaust fan openings, to keep dust and resin deposits to less than 3.2 mm (⅛ in.) thick.

8.6.1.5 Ceiling areas above veneer and fiberboard dryers shall have draft curtains to contain dust and resin deposits locally to each dryer.

8.6.1.6 Where automatic sprinkler protection is provided within the draft curtained area, the sprinkler design operating area shall be based on all heads flowing within the curtained area if this area is greater than the normal design area.

8.6.2* Rotary Dryers.

8.6.2.1 Rotary dryers having a deflagration hazard shall be located in one of the following places:

(1) Outdoors
(2) In a separate detached building
(3) In a separate cutoff room with damage-limiting construction

8.6.2.2* Rotary dryers shall have automatic spark detection and extinguishing systems installed between the dryer drum and downstream material-handling equipment, such as cyclones or wind boxes.

8.6.2.3* The interior of the dryer shall be regularly inspected and cleaned, if necessary, to keep combustible deposits to a minimum.

8.6.3* Conveyor Dryers.

8.6.3.1* Conveyor dryers shall be protected with water spray deluge systems, activated by spark, flame, and/or heat detectors.

8.6.3.2 Dust collection systems used to capture dust emissions in or between individual conveyor dryers shall be designed in accordance with 8.2.2.

8.6.3.3* The interior of the dryer shall be regularly inspected and cleaned, if necessary, to keep dust and resin deposits to a minimum.

8.6.4* Flash Tube Dryers.

8.6.4.1 The location of the flash dryers shall comply with one of the following:

(1) Flash dryers shall be located outdoors.
(2) Flash dryers shall be located in a building physically detached from the main production building.
(3) Flash dryers shall be permitted to be installed such that the head-end portion of a flash dryer, in which the moisture content of the material being dried is greater than 40 percent (dry basis), is located inside the main production building.
(4) Flash dryers shall be permitted to be installed such that any portion of a flash dryer, in which the moisture content of the material being dried is less than 40 percent (dry basis), is located inside the main production building if it has explosion protection designed in accordance with NFPA 69, *Standard on Explosion Prevention Systems.*

8.6.4.2* Flash tube dryers shall be protected by a combination of spark detection and extinguishing systems, water spray deluge, deflagration relief venting, and process isolation devices and interlocks.

8.6.4.3* The dryer duct shall be regularly inspected and cleaned to minimize fiber accumulations.

8.6.5* Kiln Dryers.

8.6.5.1* Automatic sprinkler protection shall be provided within dry kilns and ovens with a rating over 150,000 Btu/hr.

8.6.5.2 Sprinklers below the fan decks of dry kilns shall be based on the storage height of product within the kiln, with the operating area being the entire area.

8.6.5.3 Sprinklers above the fan decks of dry kilns shall be designed to provide 6.1 L/min/m^2 (0.15 gpm/ft^2) density over the entire area.

8.6.5.4 If the dry kiln is heated by a thermal oil system with hot oil piping inside the kiln that is not all welded (e.g., bolted connections), the minimum sprinkler design density shall be per the requirements in NFPA 13, *Standard for the Installation of Sprinkler Systems*, for Extra Hazard Group 1 occupancies over the entire kiln area.

8.6.5.5 Hydraulic calculations shall be balanced for the simultaneous operation of all sprinklers above and below the fan deck.

8.6.5.6* The interior of the dryer shall be regularly inspected and cleaned, if necessary, to keep dust and resin deposits to a minimum.

8.6.5.7 Fuel burner combustion controls and interlocks shall conform to Section 8.3.

8.6.6 Finishing Room Dryers. Sprinkler protection provided in finishing room dryers (flammable and combustible solvents) shall be protected as an Extra Hazard Group 2 occupancy as outlined in NFPA 13, *Standard for the Installation of Sprinkler Systems.*

8.7 Spray Finishing. Spray finishing operations shall be in accordance with NFPA 33, *Standard for Spray Application Using Flammable or Combustible Materials.*

8.8 Dipping and Coating. Dipping and coating operations shall be in accordance with NFPA 34, *Standard for Dipping, Coating, and Printing Processes Using Flammable or Combustible Liquids.*

8.9* Pollution Control Equipment.

8.9.1 The pollution control exhaust system shall be designed and maintained in accordance with NFPA 91, *Standard for Exhaust Systems for Air Conveying of Vapors, Gases, Mists, and Noncombustible Particulate Solids.*

8.9.2 Pollution control bag filters shall be designed in accordance with 8.2.2.5.

8.9.3 Where an extinguishing system is provided in pollution control equipment, the system shall be designed to operate simultaneously with any extinguishing system in the process equipment.

8.10 Storage. Except as modified in this section, storage shall be in accordance with NFPA 13, *Standard for the Installation of Sprinkler Systems.*

8.10.1 Dry Lumber. Where protected, indoor storage of lumber, panelboard, stuck lumber, dense pack lumber, and veneer shall be protected in the same manner as a Class II commodity in accordance with NFPA 13, *Standard for the Installation of Sprinkler Systems.*

Exception: Where the moisture content is greater than or equal to 25 percent (wet basis), the stored materials shall be protected in the same manner as a Class I commodity in accordance with NFPA 13, Standard for the Installation of Sprinkler Systems.

Copyright 2014 National Fire Protection Association (NFPA). Licensed, by agreement, for individual use and download on October 4, 2014 to LEADER and READER for designated user PATTARAPORN SRITRAKOOL. No other reproduction or transmission in any form permitted without written permission of NFPA. For inquires or to report unauthorized use, contact licensing@nfpa.org.

8.10.2 Flammable Liquid Storage. Design protection for bulk and container storage shall be in accordance with NFPA 30, *Flammable and Combustible Liquids Code*.

8.10.3 Silos and Storage Bins.

8.10.3.1* Where automatic sprinkler protection is provided in bins, hoppers, and silos, the system shall be hydraulically designed to provide a minimum density of 8.15 L/min/m^2 (0.20 gpm/ft^2) over the horizontal projected area of the piece of equipment.

8.10.3.2* Silos and storage bins with a deflagration hazard shall be equipped with either of the following:

(1) Deflagration relief venting designed to relieve the deflagration to a safe area and maintain the pressure below the yield strength of the vessel
(2) Explosion suppression systems designed, installed, and maintained in accordance with NFPA 69, *Standard on Explosion Prevention Systems*

8.10.3.3 Dust collectors that discharge into storage bins or silos shall do so in a manner that minimizes the generation of dust clouds. The discharge arrangement shall be constructed to minimize dust leaks and shall contain a choke to prevent explosion propagation between the collecting equipment and storage facilities.

8.10.4 Indoor Dry, Fine Particulate Storage.

8.10.4.1* Damage-limiting construction to relieve to a safe area shall be used for buildings storing dry, fine particulates where a deflagration hazard exists.

8.10.4.2 Construction shall minimize horizontal ledges where dust can accumulate.

8.10.4.3* Where provided, sprinkler piping shall be protected against explosion damage.

8.10.4.4 Any areas handling dry wood waste shall have Class II, Division 1 electrical equipment.

Exception: Buildings that store only green wood waste shall have electrical equipment suitable for Class II, Division 2 hazardous areas.

8.10.4.5 Powered front-end loaders used for material reclaim shall comply with Section 7.5.

8.11 Hot Presses.

8.11.1 Continuous Presses.

8.11.1.1* Continuous presses shall be protected in a manner acceptable to the authority having jurisdiction.

8.11.1.2 Pits beneath continuous presses shall be protected in accordance with 8.11.2.

8.11.2 Multiopening Batch-Type Presses.

8.11.2.1 For press pit installations that do not utilize thermal oil heating, automatic sprinkler protection shall be provided with a minimum density of 8.15 L/min/m^2 (0.20 gpm/ft^2) over the entire pit area, with a hose stream allowance of 1893 L/min (500 gpm) included in the hydraulic calculations.

8.11.2.2* For press pit installations where thermal oil heating is used, automatic sprinkler protection shall be designed to provide a minimum density of 10.2 L/min/m^2 (0.25 gpm/ft^2) over the entire pit area, with a hose stream allowance of 1893 L/min (500 gpm) included in the hydraulic calculations.

8.11.2.3 Where presses are supported on steel columns and thermal oil heating is used, automatic sprinkler protection for steel support columns shall be provided.

Exception: Where columns are protected with a 2-hour fire-rated material.

8.12 Wood Scrap or Wood Waste Processing and Disposal.

8.12.1 Section 8.12 shall apply to the processing and disposal of wood scrap or wood waste for fuel and other purposes.

8.12.2 If scrap or waste wood is to be processed by hogs delivering small chips and shredded product, the discharge from such processing shall comply with the requirements in Chapter 8 for dust-collecting systems.

8.12.3 Metal detectors interlocked to shut down the flow of material or magnetic separators shall be installed upstream of wood hogs and chippers.

8.12.4 Wood scrap or wood waste processed by mills delivering a pulverized product shall comply with the requirements of Section 8.4.

8.12.5 Boilers, furnaces, and thermal oil heating systems using wood scrap or wood waste as fuel shall comply with the applicable sections of NFPA 85, *Boiler and Combustion Systems Hazards Code*.

8.12.6 Where wood scrap or wood waste is disposed of in an incinerator, the incinerator shall be in accordance with the requirements of NFPA 82, *Standard on Incinerators and Waste and Linen Handling Systems and Equipment*.

Chapter 9 Fire Protection

9.1 General Fire Protection.

9.1.1* Automatic Sprinklers. Where provided, automatic sprinkler protection or water spray protection shall be designed, installed, and maintained in accordance with NFPA 13, *Standard for the Installation of Sprinkler Systems*, or NFPA 15, *Standard for Water Spray Fixed Systems for Fire Protection*, except as specifically modified in this standard.

9.1.2* Detection and Extinguishing Systems. Automatic detection and extinguishing systems or special hazard extinguishing systems, where provided, shall be designed, installed, tested, and maintained in accordance with the following standards, as applicable:

(1) NFPA 11, *Standard for Low-, Medium-, and High-Expansion Foam*
(2) NFPA 12, *Standard on Carbon Dioxide Extinguishing Systems*
(3) NFPA 15, *Standard for Water Spray Fixed Systems for Fire Protection*
(4) NFPA 17, *Standard for Dry Chemical Extinguishing Systems*
(5) NFPA 25, *Standard for the Inspection, Testing, and Maintenance of Water-Based Fire Protection Systems*
(6) NFPA 69, *Standard on Explosion Prevention Systems*
(7) *NFPA 72, National Fire Alarm and Signaling Code*
(8) NFPA 750, *Standard on Water Mist Fire Protection Systems*
(9) NFPA 2001, *Standard on Clean Agent Fire Extinguishing Systems*

9.1.3* Galvanized piping shall not be used in high-temperature and high-humidity environments.

9.1.4* Inside Hose Stations. Inside hose stations, where provided, shall conform to NFPA 14, *Standard for the Installation of Standpipe and Hose Systems*.

Copyright 2014 National Fire Protection Association (NFPA). Licensed, by agreement, for individual use and download on October 4, 2014 to LEADER and READER for designated user PATTARAPORN SRITRAKOOL. No other reproduction or transmission in any form permitted without written permission of NFPA. For inquires or to report unauthorized use, contact licensing@nfpa.org.

9.1.5 Water Supply.

9.1.5.1 Private hydrants and underground mains, where provided, shall comply with NFPA 24, *Standard for the Installation of Private Fire Service Mains and Their Appurtenances.*

9.1.5.2 Fire pumps, where provided, shall comply with NFPA 20, *Standard for the Installation of Stationary Pumps for Fire Protection.*

9.1.5.3 Fire protection water tanks, where provided, shall comply with NFPA 22, *Standard for Water Tanks for Private Fire Protection.*

9.1.6* Portable Fire Extinguishers. Portable fire extinguishers shall be provided throughout all buildings in accordance with the requirements of NFPA 10, *Standard for Portable Fire Extinguishers.*

Chapter 10 Human Element

10.1 Objective. Human element programs shall be created that will reduce or eliminate the loss of life, personal injury, and property damage due to fire and explosion.

10.2 Inspection and Maintenance.

10.2.1 An inspection, testing, and maintenance program shall be developed to ensure that fire and explosion protection systems are in accordance with Chapter 9.

10.2.2 The inspection, testing, and maintenance program shall be a documented program detailing the equipment inspected, testing performed, test results formulated, and maintenance or repair requirements.

10.2.3* Process controls, equipment, and machinery shall be inspected, tested, and maintained in accordance with the manufacturer's recommended guidelines and safe practices.

10.2.4 Dust Collection Systems.

10.2.4.1* The entire system, including each fan, motor, blower unit, operating control panels, fume scrubbers, flexible connections, and dampers, shall be inspected and maintained in accordance with the manufacturer's recommended guidelines and safe practices.

10.2.4.2* Aluminum paint shall not be used on interior steel surfaces.

10.2.4.3 Filters shall be cleaned or replaced when their resistance to airflow exceeds the manufacturer's specifications.

10.2.4.4 Filter media shall not be replaced with an alternative type unless a thorough evaluation of the fire hazards has been performed, documented, and reviewed by management.

10.2.4.5 Where ducts are protected with sprinklers, sprinklers covered with deposits or corrosion shall be replaced or sent to a recognized testing lab for evaluation of suitability for continued service.

10.2.4.6 All vents for the relief of pressure caused by deflagrations shall be maintained free and clear of all obstructions and pursuant to the manufacturer's recommendations.

10.2.4.7 Maintenance shall not be performed on fans, blowers, or other equipment while the unit(s) is operating.

10.3 Record Retention.

10.3.1* Records requiring retention shall include, but are not limited to, drawings and supporting documents relating to initial installation/purchase of equipment, routine equipment inspections, testing and repair history, fire and safety inspection or audit reports, service records, and manufacturer's data sheets.

10.3.2* Records of inspections, tests, and maintenance of fire protection equipment and components shall be retained and made available to the authority having jurisdiction upon request.

10.3.3* All records required to be kept shall be retained until their usefulness has been served or until no longer required by the applicable standard or authority having jurisdiction.

10.3.4* Records shall be maintained on-site by the owner.

10.3.5* Retained records shall indicate the procedure performed (e.g., installation, inspection, testing, training, or maintenance), the organization that performed the work, the results, and the date the work was performed.

10.4* Employee Training. Employee training shall include general safety training and job-specific training.

10.4.1 General safety training shall ensure that all employees are knowledgeable about the following:

(1) General plant safety rules
(2) Emergency procedures
(3) Procedure for reporting an accident or unsafe conditions
(4) Housekeeping policy and practices
(5) Basic personal protective equipment requirements
(6) Location of safety office, medical center, and first-aid stations
(7) Emergency routes, exits, and safe shelters
(8) Location of fire protection equipment
(9) Hazardous areas

10.4.2 Job-specific training shall ensure that all employees are knowledgeable about the following:

(1)*The hazards of their working environment and their behavior and procedures in case of emergencies, including fires, explosions, and hazardous materials releases
(2) Emergency response plans, including safe and proper evacuation of their work area and the permissible methods for fighting incipient fires in their work area
(3) The necessity for proper functioning of related fire and explosion protection systems that are under their responsibility
(4) Equipment maintenance requirements and practices, including lockout/tagout procedures
(5) Safe handling, use, storage, and disposal of hazardous materials used in the employees' work areas
(6) The location and operation of fire protection equipment, manual pull stations and alarms, emergency phones, first-aid supplies, and safety equipment
(7) Equipment operation, safe startup and shutdown, and response to upset conditions
(8) The decision-making process necessary to determine the degree and extent of the hazard and the personal protective equipment and job planning necessary to perform the task safely

10.4.3* A qualified person shall be trained and knowledgeable of the construction and operation of equipment or a specific work method, and shall be trained to recognize and avoid potential hazards present with respect to that equipment or work method.

Copyright 2014 National Fire Protection Association (NFPA). Licensed, by agreement, for individual use and download on October 4, 2014 to LEADER and READER for designated user PATTARAPORN SRITRAKOOL. No other reproduction or transmission in any form permitted without written permission of NFPA. For inquires or to report unauthorized use, contact licensing@nfpa.org.

10.4.4 Training programs and procedures shall be reviewed and updated at least annually and whenever workplace conditions (i.e., equipment, process, chemical, material storage) change.

10.4.5* Emergency awareness training shall be given to all employees when emergency plans are initially implemented, revised, or updated and at least annually.

10.5 Contractors and Subcontractors.

10.5.1* Contractors performing work involving the installation, repair, or modification of buildings (interior and exterior), machinery, fire protection equipment, and so forth, shall be trained (to the level of the employee), and only qualified contractors shall be employed.

10.5.2 Companies that hire contractors to operate their equipment shall ensure that those contractors are properly trained and qualified to operate the equipment and perform the work. Written documentation shall be maintained detailing the training that was provided and who received it.

10.5.3 Contractors working on or near a given process shall be made aware of the potential hazards from and exposures to fire, explosion, or toxic releases.

10.5.4* Contractors shall be trained and required to comply with the facility's safe work practices and policies, including but not limited to equipment lockout/tagout permitting, hot work permitting, fire system impairment handling, smoking, housekeeping, use of personal protective equipment, and so forth.

10.5.5 Contractors shall be made aware of the facility's emergency response and evacuation plan.

10.5.6 Contractors shall be informed of whom to report emergencies to and be advised of safe egress points and evacuation areas in the event of an emergency such as fire, explosion, or toxic release.

10.6 Portable Appliances.

10.6.1* A written policy shall be established to regulate the use of portable appliances.

10.6.2* The policy shall identify locations where specific portable appliances are permitted or prohibited.

10.6.3* The policy shall provide for inspections conducted periodically to ensure compliance with this standard.

10.7* Management of Change. Management shall implement and maintain a system to evaluate proposed changes to the facility and processes, both physical and human, for the impact on safety, loss prevention, and control.

10.7.1 Management of change shall include review by all relevant authorities having jurisdiction.

10.7.2* Management of change shall include review of all projects involving the following:

(1)*Occupancy and process changes involving storage configurations and heights, process equipment and materials, or rates of production
(2)*Changes to all fire protection and alarm systems
(3)*Exposure changes
(4) Human element changes involving key members of loss prevention programs
(5) New construction or modification to an existing structure

10.8 Incident Investigation.

10.8.1* Every incident that results in a fire or explosion shall be investigated and recorded.

10.8.2* Once the scene has been released by the authority having jurisdiction, incident investigations shall be promptly initiated by management personnel or their designee who has a good working knowledge of the facility and processes.

10.9 Impairments of Fire Protection and Explosion Prevention Systems.

10.9.1* Impairments shall include anything that interrupts the normal intended operation of the fire protection or explosion prevention system.

10.9.2* A written impairment procedure shall be followed for every impairment to the fire protection or explosion prevention system.

10.9.3* Impairments shall be limited in size and scope to the system or portion thereof being repaired, maintained, or modified.

10.9.4* Impairment notification procedures shall be implemented by management to notify plant personnel and the authority having jurisdiction of existing impairments and their restoration.

10.10 Smoking. Smoking shall be permitted only in designated areas equipped with ample devices for smoking material disposal and free of combustible/flammable hazards or storage.

10.11* Hot Work.

10.11.1* Hot work shall be performed in accordance with NFPA 51B, *Standard for Fire Prevention During Welding, Cutting, and Other Hot Work.*

10.11.2 Facilities shall ensure that outside contractors operate pursuant to NFPA 51B, *Standard for Fire Prevention During Welding, Cutting, and Other Hot Work.*

10.12 Emergency Planning and Response.

10.12.1 Emergency planning and response shall be in accordance with NFPA 600, *Standard on Industrial Fire Brigades.*

10.12.2 A written emergency plan shall be developed for preventing, preparing for, and responding to work-related emergencies including but not limited to fire and explosion.

Chapter 11 Housekeeping

11.1 General Requirements.

11.1.1* This chapter shall apply to the monitoring and removal of combustible waste materials in order to prevent these materials from accumulating outside, on, or around operating equipment or otherwise within the facility in sufficient quantity to create an undue fire hazard.

11.1.2 Fugitive Dust Control.

11.1.2.1 Where deflagrable wood dust is produced by process equipment, continuous suction to capture and contain fugitive dust shall be provided.

11.1.2.2 The captured dust shall be conveyed to one or more dust collectors.

Copyright 2014 National Fire Protection Association (NFPA). Licensed, by agreement, for individual use and download on October 4, 2014 to LEADER and READER for designated user PATTARAPORN SRITRAKOOL. No other reproduction or transmission in any form permitted without written permission of NFPA. For inquires or to report unauthorized use, contact licensing@nfpa.org.

11.1.3* Documented housekeeping and inspection programs shall be developed and maintained.

11.1.4* Any waste material or debris found in large enough quantity that the material is heavily coated or is in any way impeding the operation of energized or moving equipment shall be collected and removed immediately.

11.1.5 Combustible waste that cannot be reintroduced to the production process or utilized as fuel shall be placed in covered metal receptacles until removed to a safe place for daily disposal.

11.1.6 Any metal collected through the cleanup process shall be separated from wood debris or combustible waste to prevent entry into the wood-handling or processing equipment, the dust-collecting system, or the scrap wood hog.

11.1.7* Production equipment shall be maintained and operated in a manner that minimizes the escape of debris or dust in accordance with Chapter 8.

11.1.8 Spaces inaccessible to housekeeping shall be sealed to prevent dust accumulation.

11.1.9* Combustible or flammable liquid spills or leaks from any source shall be cleaned up without delay.

11.1.10 Residue from condensation of oil and resin volatiles shall be removed from areas within, around, and over curing ovens, dryers, fume extraction systems, or ventilation systems.

11.1.11 Oil-soaked cloths or waste material shall be stored in approved metal receptacles with self-closing covers.

11.1.12 Oily clothing, if stored between shifts, shall be kept in metal lockers.

11.1.13 Flammable liquids shall be handled and stored in accordance with NFPA 30, *Flammable and Combustible Liquids Code*.

11.2 Cleanup Methods.

11.2.1 Removal of Dust.

11.2.1.1* Surfaces shall be cleaned in a manner that minimizes the generation of dust clouds. Blowing down with steam or compressed air or even vigorous sweeping shall be permitted only if the following requirements are met:

(1) The floor area and equipment shall be vacuumed prior to blowdown.
(2) Electrical power and other sources of ignition shall be shut down, removed from the area, or classified for use in dusty areas per *NFPA 70, National Electrical Code*.
(3) Only a low gauge pressure of 103 kPa (15 psi) steam or compressed air shall be used.
(4) No open flames, sparks from spark-producing equipment, or hot surfaces capable of igniting a dust cloud or layer shall exist.
(5) All fire protection equipment shall be in service.

11.2.1.2* Unless the conditions stipulated in 11.2.1.3 are met, portable vacuum cleaners shall be listed for use in Class II hazardous locations or shall be a fixed-pipe suction system with remotely located exhauster and air-material separator dust collector installed in conformance with Chapter 11.

11.2.1.3 When used in Class II areas, as determined in accordance with 7.3.2, portable vacuum cleaners shall be listed for use in Class II hazardous locations or shall be a fixed-pipe suction system with remotely located exhauster and dust collector installed in conformance with Chapter 11.

Annex A Explanatory Material

Annex A is not a part of the requirements of this NFPA document but is included for informational purposes only. This annex contains explanatory material, numbered to correspond with the applicable text paragraphs.

A.1.1.2 Specific criteria in this standard are advisable for facilities that fall outside this document's scope. A hazard and risk analysis should be performed to identify areas where specific criteria are appropriate.

A.1.6.2 A given equivalent value could be approximate.

A.3.2.1 Approved. The National Fire Protection Association does not approve, inspect, or certify any installations, procedures, equipment, or materials; nor does it approve or evaluate testing laboratories. In determining the acceptability of installations, procedures, equipment, or materials, the authority having jurisdiction may base acceptance on compliance with NFPA or other appropriate standards. In the absence of such standards, said authority may require evidence of proper installation, procedure, or use. The authority having jurisdiction may also refer to the listings or labeling practices of an organization that is concerned with product evaluations and is thus in a position to determine compliance with appropriate standards for the current production of listed items.

A.3.2.2 Authority Having Jurisdiction (AHJ). The phrase "authority having jurisdiction," or its acronym AHJ, is used in NFPA documents in a broad manner, since jurisdictions and approval agencies vary, as do their responsibilities. Where public safety is primary, the authority having jurisdiction may be a federal, state, local, or other regional department or individual such as a fire chief; fire marshal; chief of a fire prevention bureau, labor department, or health department; building official; electrical inspector; or others having statutory authority. For insurance purposes, an insurance inspection department, rating bureau, or other insurance company representative may be the authority having jurisdiction. In many circumstances, the property owner or his or her designated agent assumes the role of the authority having jurisdiction; at government installations, the commanding officer or departmental official may be the authority having jurisdiction.

A.3.2.4 Listed. The means for identifying listed equipment may vary for each organization concerned with product evaluation; some organizations do not recognize equipment as listed unless it is also labeled. The authority having jurisdiction should utilize the system employed by the listing organization to identify a listed product.

A.3.3.4 Damage-Limiting Construction. This construction method usually makes maximum use of exterior walls as pressure-relieving walls rather than relying on the minimum recommended. Pressure-resistive walls are sometimes included to help prevent explosion propagation into adjacent areas. Further information on this subject can be found in NFPA 68, *Standard on Explosion Protection by Deflagration Venting*.

A.3.3.7 Deflagration Hazard. Since a deflagration is a rapid propagation of a flame front through a fuel-air mixture, a deflagration can result in widespread ignition of combustibles, thermal burns to occupants, and severe structural damage to the building, including fire and building collapse.

A.3.3.9 Dust Collection Systems. Each pneumatic system should consist of branch ducts connected to hoods or enclosures, one or

Copyright 2014 National Fire Protection Association (NFPA). Licensed, by agreement, for individual use and download on October 4, 2014 to LEADER and READER for designated user PATTARAPORN SRITRAKOOL. No other reproduction or transmission in any form permitted without written permission of NFPA. For inquires or to report unauthorized use, contact licensing@nfpa.org.

more main ducts, airflow-producing equipment (fans or blowers), and a means for separating the entrained wood particles from the air flowing in the system.

A.3.3.10.1 Cyclone. One example of a typical cyclone is shown in Figure A.3.3.10.1. There are other acceptable configurations.

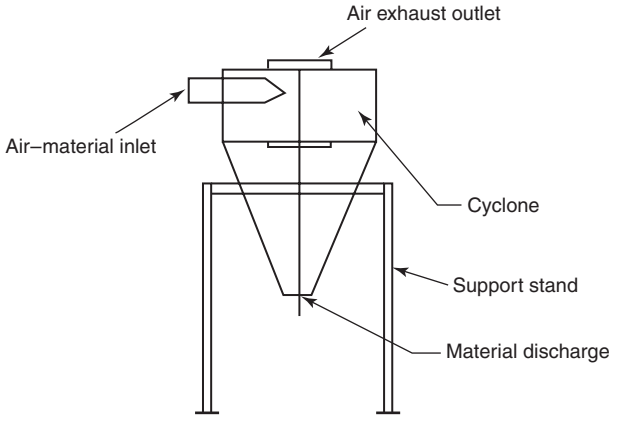

FIGURE A.3.3.10.1 A Typical Cyclone.

A.3.3.10.2 Enclosureless Dust Collector. Item (2) is intended to ensure that nothing becomes a projectile and represents a missile hazard in the event of a deflagration within the filter media. Cloth filter bags, unenclosed cartridge-type felt, or paper filter media are acceptable. Additionally, where wire screen is used to provide mechanical support for the filter media, it is not considered a serious missile hazard. However, a cartridge enclosed within a metal container is not acceptable. Item (5) is intended to effectively limit the size of the collector because, without continuous or mechanical removal of collected dust, it is not practical to manually remove the dust on the larger systems. Two typical enclosureless dust collectors are shown in Figure A.3.3.10.2.

A.3.3.17 Minimum Explosible Concentration (MEC). Minimum explosible concentration is defined by the test procedure in ASTM E 1515, *Standard Test Method for Minimum Explosible Concentration of Combustible Dusts*. MEC is equivalent to the term *lower flammable limit* for flammable gases. Because it has been customary to limit the use of the term *lower flammable limit* to flammable vapors and gases, an alternative term is necessary for combustible ducts.

The MEC is dependent on many factors, including particulate size distribution, chemistry, moisture content, and shape. Consequently, designers and operators of processes that handle combustible particulate solids should consider those factors when applying existing MEC data. Often, the necessary MEC data can be obtained only by testing. [**654,** 2006]

A.3.3.18 Moisture Content (Wet Basis). The moisture content is determined by completely drying a sample and dividing the amount of water driven off by the original sample mass. If a 1 kg sample of wood is dried to the point where no additional weight loss can be obtained with additional drying and the sample is then weighed and weighs 0.75 kg, the moisture content is (sample wt before – sample wt after)/sample wt before = (1 kg – 0.75 kg)/1 kg = 25%. The conversion from wet basis to dry basis is illustrated in Figure A.3.3.18.

A.3.3.27.1 Deflagrable Wood Dust. Dusts traditionally have been defined as a material 420 microns or smaller (capable of passing through a U.S. No. 40 standard sieve). For consistency with more recent test data and other standards, 500 microns (capable of passing through a U.S. No. 35 standard sieve) is now considered an appropriate size criterion. Particle surface area to volume ratio is a key factor in determining the rate of combustion. Combustible particulate solids with a minimum dimension more than 500 microns generally have a surface to volume ratio that is too small to pose a deflagration hazard. Flat platelet-shaped particles, flakes, or fibers with lengths that

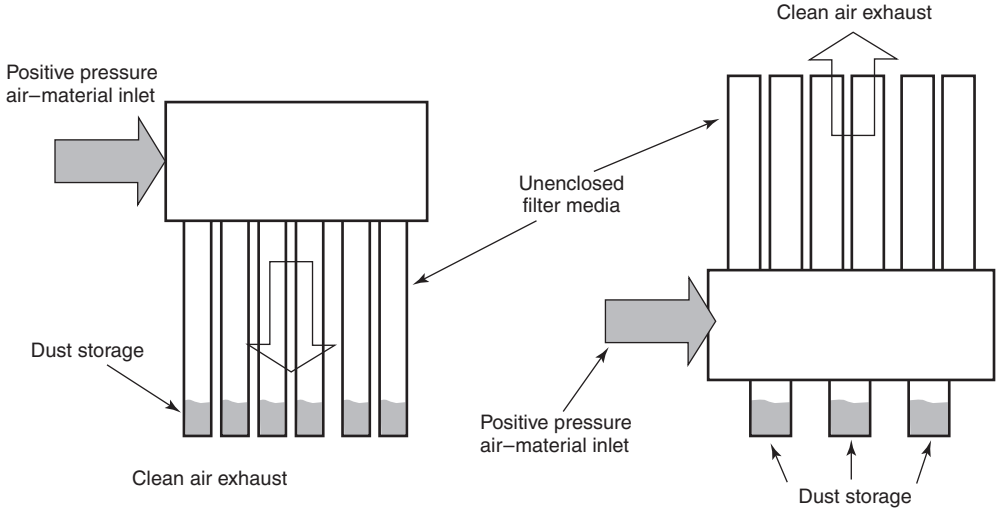

FIGURE A.3.3.10.2 Two Typical Enclosureless Dust Collectors.

Copyright 2014 National Fire Protection Association (NFPA). Licensed, by agreement, for individual use and download on October 4, 2014 to LEADER and READER for designated user PATTARAPORN SRITRAKOOL. No other reproduction or transmission in any form permitted without written permission of NFPA. For inquires or to report unauthorized use, contact licensing@nfpa.org.

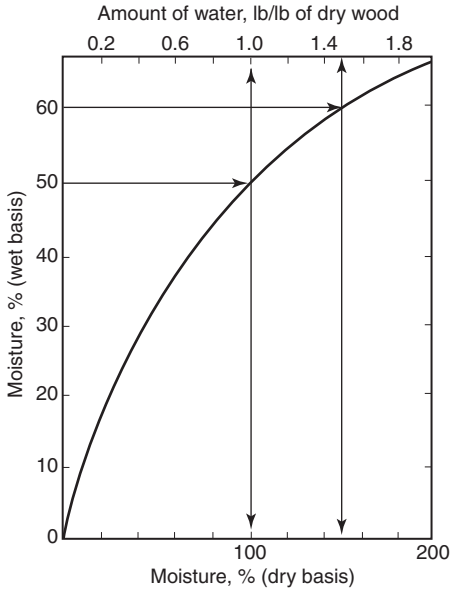

FIGURE A.3.3.18 Conversion from Wet Basis to Dry Basis.

are large compared to their diameter usually do not pass through a 500 micron sieve yet could still pose a deflagration hazard. Many particulates accumulate electrostatic charge in handling, causing them to attract each other, forming agglomerates. Often agglomerates behave as if they were larger particles, yet when they are dispersed they present a significant hazard. Consequently, it can be inferred that any particle that has a minimum dimension of less than 500 microns could behave as a combustible dust if suspended in air.

It is critical to keep in mind that as particulate is processed, handled, or transported, the particle size generally decreases due to particle attrition.

The determination of whether a sample of material is a combustible (explosible) dust should be based on a screening test methodology such as provided in the draft ASTM E 1226, *Standard Test Method for Explosibility of Dust Clouds*. Alternatively, a standardized test method such as ASTM E 1515, *Standard Test Method for Minimum Explosible Concentration of Combustible Dusts*, can be used to determine dust explosibility.

There is some possibility that a sample will result in a false positive in the 20 L sphere when tested by the ASTM E 1226 screening test or ASTM E 1515 test. This is due to the high energy ignition source over-driving the test. When the lowest ignition energy allowed by either method still results in a positive result, the owner/operator can elect to determine whether the sample is a combustible dust with screening tests performed in a larger scale (1 m^3) enclosure, which is less susceptible to over-driving and thus will provide more realistic results.

This possibility for false positives has been known for quite some time and is attributed to over-driven conditions that exist in the 20 L chamber due to the use of strong pyrotechnic igniters. For that reason, the reference method for explosibility testing is based on a 1 m^3 chamber, and the 20 L chamber test method is calibrated to produce results comparable to those from a 1 m^3 chamber for most dusts. In fact, the U.S. standard for 20 L testing (ASTM E 1226) states: "The objective of this test method is to develop data that can be correlated to those from the 1 m^3 chamber (described in ISO 6184/1 and VDI 3673)…." ASTM E 1226 further states: "Because a number of factors (concentration, uniformity of dispersion, turbulence of ignition, sample age, etc.) can affect the test results, the test vessel to be used for routine work must be standardized using dust samples whose K_{St} and P_{max} parameters are known in the 1 m^3 chamber."

NFPA 68, *Standard on Explosion Protection by Deflagration Venting*, also recognizes this problem and addresses it, stating: "The 20 L test apparatus is designed to simulate results of the 1 m^3 chamber; however, the igniter discharge makes it problematic to determine K_{St} values less than 50 bar-m/sec. Where the material is expected to yield K_{St} values less than 50 bar-m/sec, testing in a 1 m^3 chamber might yield lower values."

Any time a combustible dust is processed or handled, a potential for deflagration exists. The degree of deflagration hazard varies depending on the type of combustible dust and the processing methods used.

A dust deflagration has the following four requirements:

(1) Combustible dust
(2) Dust dispersion in air or other oxidant
(3) Sufficient concentration at or exceeding the minimum explosible concentration (MEC)
(4) Sufficiently powerful ignition source, such as an electrostatic discharge, an electric current arc, a glowing ember, a hot surface, welding slag, frictional heat, or a flame

If the deflagration is confined and produces a pressure sufficient to rupture the confining enclosure, the event is, by definition, an "explosion."

Evaluation of the hazard of a combustible dust should be determined by the means of actual test data. Each situation should be evaluated and applicable tests selected. The following list represents the factors that are sometimes used in determining the deflagration hazard of a dust:

(1) Minimum explosible concentration (MEC)
(2) Minimum ignition energy (MIE)
(3) Particle size distribution
(4) Moisture content as received and as tested
(5) Maximum explosion pressure at optimum concentration
(6) Maximum rate of pressure rise at optimum concentration
(7) K_{St} (normalized rate of pressure rise) as defined in ASTM E 1226
(8) Layer ignition temperature
(9) Dust cloud ignition temperature
(10) Limiting oxidant concentration (LOC) to prevent ignition
(11) Electrical volume resistivity
(12) Charge relaxation time
(13) Chargeability

Consequently, it is often necessary to evaluate the explosibility of the particulate at multiple points along the process. Where process conditions dictate the use of oxidizing media other than air (nominally taken as 21 percent oxygen and 79 percent nitrogen), certain of the above tests should be conducted in the appropriate process specific medium.

A.4.2.2 In some cases, such as fine particulates generated from hardwoods, it is advisable to correct for a settled bulk density in excess of the 20 lb/ft^3 (320 kg/m^3), used in this requirement.

The measurement of bulk density is very dependent upon the particle, size, shape, and chemical content. Settled bulk density is not the same as tapped bulk density. Settled bulk density is the density as the material has settled in the facility under normal

Copyright 2014 National Fire Protection Association (NFPA). Licensed, by agreement, for individual use and download on October 4, 2014 to LEADER and READER for designated user PATTARAPORN SRITRAKOOL. No other reproduction or transmission in any form permitted without written permission of NFPA. For inquires or to report unauthorized use, contact licensing@nfpa.org.

operating conditions. Tapped bulk density is the maximum density that can be achieved without intentional compression. Tapped bulk density measurement numbers are almost always higher than settled bulk density measurement numbers.

Moisture content is a factor that has a profound effect on dust deflagration propagation. Moisture in dust particles raises the minimum ignition temperature (MIT), minimum ignition energy (MIE), and minimum explosible concentration (MEC) by increasing agglomeration of particles.

Moisture content can be determined using the following method:

(1) Weigh the material of which a moisture content is to be determined in the moist, as-received state.
(2) Then dry it for 24 hours in a drying oven set at 75°C (167°F).
(3) Then reweigh the sample.

Calculate the moisture content from the following relation:

% MC = [(moist weight) – (dry weight)](100)/moist weight

While no ASTM method currently exists for determining settled bulk density, the following method has been utilized to produce usable results. Since the use of bulk density measurements is to determine the permissible dust layer depth for hazard assessment, bulk density should be based upon the dried weight, not moist weight; the water in the moist sample does not add combustible material to the mixture.

Recommended Tools: Neoprene or other similar plastic-type gloves, ruler, two natural bristle brushes [100 mm (4 in.) width], scales (that measure grams), pre-weighed container (weighed in grams to nearest tenth of a gram), and a drying oven.

Recommended Procedure:

(1) Pre-weigh and record container weight.
(2) Locate horizontal surface area where dust is present and is evenly distributed across a flat surface. This is an important criterion.
(3) Mark off a 1 ft^2 (0.09 m^2) area. (It is easier if one of the four sides is the horizontal surface ledge). If one square foot is not available due to size of surface use: ½ ft × 2 ft; ¼ ft × 4 ft, etc.
(4) Using the ruler as a guide, carefully scrape the other dust surrounding the marked 1 ft^2 (0.09 m^2) (or other established one square foot dimension) back away from the dust square (or rectangle) to at least 8–12 in. Use the first brush if needed to clean dust away from the 1 ft^2 (0.09 m^2) selected for density measurement [ensuring that the 1 ft^2 (0.09 m^2) area does not receive any of the dust being brushed away].
(5) Measure and record the height (to the nearest 1/32 in.) of the dust layer as it sits on the horizontal layer. Take a minimum of three to five measurements along the edge of the dust layer to establish an average height (to the nearest 1/32 in.) of the dust layer.
(6) Take the second clean, natural bristle brush and carefully brush the dust contained inside the 1 ft^2 (0.09 m^2) area into the pre-weighed container.
(7) At this time, the dust sample must be dried as outlined above.
(8) Weigh the dried dust sample and the container together and record the weight in grams.
(9) Subtract the weight of the container from the weight of the dried dust-filled container to obtain the weight of the dried dust in grams. Record the dust weight.
(10) Calculate volume of the dust layer using average height measured (in inches) × length (12 in.) × height (12 in.) to obtain cubic inches of volume.
(11) Convert cubic inches to cubic feet.
(12) Convert grams of dust measured to pounds. (Note: 453.6 g = 1 lb).
(13) Divide pounds of dust by cubic feet to establish estimated density in pound per cubic feet (lb/ft^3).

Example:

Container pre-weight is 500 g.

Average dust height measured is 2 1/32 in.

Container plus dust weight is 660 g.

Dust Volume Determination in cubic feet (ft^3):

2 1/32 in. = 65/32 in., or 2.03125 in. (51.6 mm)

Volume ($in.^3$) = L × W × H = 12 in. × 12 in. × 2.03125 in. = 292.5 cubic $in.^3$

Convert cubic inches to cubic feet: There are 1728 $in.^3$ in 1 ft^3.

Volume (ft^3) = Volume ($in.^3$) ÷ 1728 = 292.5 ÷ 1728 = 0.169 ft^3 (0.0048 m^3)

(305 mm × 305 mm × 51.6 mm) = (0.305 m × 0.305 m × 0.0516 m = 0.0048 m^3)

Dust Weight Determination in pounds (lb):

To obtain the weight of the dust, subtract container weight in grams from weight of the container containing the dried sample:

660 g – 500 g = 160 g

Convert grams to pounds. There are 453.6 g in 1 lb, therefore:

160 g ÷ 453.6 g/lb = 0.353 lb (of dust)

Dust Density Determination:

Divide pounds of dust by volume of dust in cubic feet:

0.353 lb ÷ 0.169 ft^3 = 2.087 lb/ft^3.

Round off to nearest tenth of a pound = 2.1 lb/ft^3

[0.16 kg ÷ 0.0048 m^3] (33.43 kg/m^3).

A.4.3 A process analysis is a methodical review of the facility, each operation housed within, and the identification of where a hazard exists. For example, in a woodworking facility it would include where fire hazards exist, where explosion hazards exist, and what protective measures are in place to protect the personnel and property from those hazards.

A.4.6.1.1 The phrase "intimate with ignition" refers to the person(s) at the ignition source or first materials burning, and not to all persons within the same room or area.

A.4.6.3 The facility owner/operator or an insurance representative could also have a mission continuity goal that will necessitate more stringent objectives as well as more specific and demanding performance criteria. The protection of property beyond maintaining structural integrity long enough to escape is actually a mission continuity objective. The mission continuity objective encompasses the survival of both real property such as the building and the production equipment and inventory beyond the extinguishment of the fire. Traditionally, property protection objectives have addressed the impact of the fire on structural elements of a building as well as the equipment and contents in a building. Mission continuity is concerned with the ability of a structure to perform its intended functions and with how that affects the structure's tenants. It often addresses post-fire smoke contamination, cleanup, replacement of damaged equipment or raw materials, and so forth.

Copyright 2014 National Fire Protection Association (NFPA). Licensed, by agreement, for individual use and download on October 4, 2014 to LEADER and READER for designated user PATTARAPORN SRITRAKOOL. No other reproduction or transmission in any form permitted without written permission of NFPA. For inquires or to report unauthorized use, contact licensing@nfpa.org.

A.4.6.4 Ignition occurs when combustible material comes in contact with a source of heat of sufficient temperature and power for a requisite time. Combustible material does not necessarily ignite immediately upon contact with sources of heat. Some processes are designed to intentionally use heat to achieve a process objective. This equipment should be protected pursuant to Chapters 8 and 9.

A.4.6.4.1 Adjacent compartments are those sharing a common enclosure surface (wall, ceiling, floor) with the compartment of fire or explosion origin. The intent is to prevent the collapse of the structure during the deflagration.

A.4.7.2.1 Chapter 5 of NFPA *101*, *Life Safety Code*, provides a more complete description of the performance-based design process and requirements.

A.4.7.2.2 Relevant aspects that could require a re-evaluation include, but are not limited to, changes to the following:

(1) Storage of hazardous materials
(2) Storage of nonhazardous materials
(3) Machinery
(4) Machinery layout
(5) Motor horsepower
(6) Fan and blower specifications
(7) Pneumatic conveying and dust collection system ducts
(8) Process operating temperatures
(9) Other procedures and processes, and equipment

A.5.1.5 The *SFPE Engineering Guide to Performance-Based Fire Protection Analysis and Design of Buildings* outlines a process for developing, evaluating, and documenting performance-based designs.

A.5.2.4.1 Fire losses have occurred where steam piping was identified as the ignition source for wood dust deposits. This apparently occurred because prolonged exposure to elevated temperatures caused the decrepitation of the cellulose into pyrolysis products that can have lower ignition temperatures than those normally associated with wood. The same process is possible with some other combustible particulates. In permitting maximum surface temperatures above 100°C (212°F) (the minimum steam temperature), it is assumed that appropriate personnel safety measures are in place and that a rigid housekeeping program exists to keep dust accumulations under control. Equipment surfaces in hard-to-access locations that will collect dust and are likely to be cleaned less frequently should be insulated to keep the maximum surface temperature below 100°C (212°F).

A.5.4.1 The *SFPE Engineering Guide to Performance-Based Fire Protection Analysis and Design of Buildings* outlines a process for evaluating whether trial designs meet the performance criteria during the design fire scenarios.

Procedures described in Section 5.4 identify required design fire scenarios within which a proposed fire safety design needs to perform and the associated untenable conditions that need to be avoided in order to maintain life safety. Additionally, this same process should be used to establish the level of tolerance that specific contents, building features, or both, can sustain without incurring irreparable damage. This section discusses methods that form the link from the scenarios and criteria to the goals and objectives.

Assessment methods are used to demonstrate that the proposed design will achieve the stated goals/objectives, by providing information indicating that the performance criteria of this section can be adequately met. Assessment methods can be either tests or modeling.

Tests. Test results can be directly used to assess a fire safety design when they accurately represent the scenarios and when they provide output data matching the performance criteria. Since the performance criteria for this standard are stated in terms of human exposure to lethal fire effects, no test suffices. However, tests are needed to produce data for use in models and other calculation methods. Likewise, there is little specific data regarding the impact of smoke, heat, and flame on dated fabric, materials, and construction materials. When possible, anecdotal information, tests on like materials, or both, can be necessary to establish credible damage limits on these materials.

The following provide further information on types of tests and uses of data:

(1) *Standardized Tests.* Standardized tests are conducted on various systems and components to determine whether or not they meet some predetermined, typically prescriptive, criteria. Results are given on a pass/fail basis: either the test specimen does or does not meet the pre-established criteria. The actual performance of the test specimen is not usually recorded.
(2) *Scale.* Tests can be either small, intermediate, or full scale. Small-scale tests are used to test activation of detection and suppression devices, and the flammability and toxicity of materials. Usually, the item to be tested is placed within the testing device or apparatus. Intermediate-scale tests can be used to determine the adequacy of system components (e.g., doors and windows, as opposed to entire systems). The difference between small and intermediate scale is usually one of definition provided by those conducting the test. Full-scale tests are typically used to test building and structural components or entire systems. The difference between intermediate and large scale is also subject to the definition of those performing the test. Full-scale tests are intended to most closely depict performance of the test subject as installed in the field (i.e., most closely represent real world performance). Full-scale building evacuations can provide information on how the evacuation of a structure is likely to occur for an existing building with a given population but without subjecting occupants to the real physical or psychological effects of a fire.
(3) *Data Uses.* The data obtained from standardized tests have three uses for verification purposes. The test results can be used instead of a model. (This will typically be the role of full-scale test results.) The test results can be used as a basis for validating the model. (The model predictions match well with the test results; therefore, the model can be used in situations similar to the test scenario.) The test results can be used as input to models. (This is typically the use of small-scale tests; specifically, flammability tests.)
(4) *Start-up Test.* Start-up test results can be used to demonstrate that the fire safety system performs as designed. The system design can be based upon modeling. If the start-up test indicates a deficiency, the system needs to be adjusted and retested until it can be demonstrated that the design can meet the performance criteria. Typically, start-up tests apply only to the installation to which they are designed.
(5) *Experimental Data.* Experimental data from nonstandardized tests can be used when the specified scenario and the experimental setup are similar. Typically, experimental data are applicable to a greater variety of scenarios than are standardized test results.

Copyright 2014 National Fire Protection Association (NFPA). Licensed, by agreement, for individual use and download on October 4, 2014 to LEADER and READER for designated user PATTARAPORN SRITRAKOOL. No other reproduction or transmission in any form permitted without written permission of NFPA. For inquires or to report unauthorized use, contact licensing@nfpa.org.

(6) *Human and Organizational Performance Tests.* Certain tests determine whether inputs used to determine human performance criteria remain valid during the occupancy of a building. Tests of human and organizational performance might include any of the following:
   (a) Evacuation times measured during fire drills
   (b) Querying emergency response team members to determine whether they know required procedures
   (c) Field tests to ensure that emergency response team members can execute tasks within predetermined times and accuracy limits (Design proposals should include descriptions of any tests that are needed to determine whether stated goals, objectives, and performance criteria are being met.)

Modeling. Models can be used to predict the performance criteria for a given scenario. Because of the limitations on use of tests alone for this purpose, models are expected to be used in most, if not all, performance-based design assessments.

Fire models do not model fires; they model the effects of a (user-) specified fire (i.e., a heat release rate curve is input). For ease of use, the term *fire model* is used in this discussion instead of the more accurate *fire effects model.*

The effect of fire and its toxic products on the occupants can be modeled, as can the movement and behavior of occupants during the fire incident. The term *evacuation model* is used to describe models that predict the location and movements of occupants, and the term *tenability model* is used to describe models that predict the effects on occupants of specified levels of exposure to fire effects. The term *exposure model* is used to describe models that replicate the movement of smoke and heat and tell how smoke and heat can potentially affect the fabric of the material or content.

The following provide further information on fire models:

(1) *Types of Fire Models.* Fire models are used to predict fire-related performance criteria. Fire models can be either probabilistic or deterministic. Several types of deterministic models are available: computational fluid dynamics (CFD) or field models, zone models, purpose-built models, and hand calculations. Probabilistic fire models are also available, but they are less likely to be used for this purpose. Probabilistic fire models use the probabilities as well as the severity of various events as the basis of evaluation. Some probabilistic models incorporate deterministic models, but this is not a requirement.

   Probabilistic models attempt to predict the likelihood or probability that events or severity associated with an unwanted fire will occur or the expected loss, which can be thought of as the probability-weighted average severity across all possible scenarios. Probabilistic models can be manifested as fault or event trees or to other system models that use frequency or probability data as input. These models tend to be manifested as computer software, but this is not a requirement. Furthermore, the discussion under Sources of Models can also be applied to probabilistic models, although the section concentrates on deterministic models.

   CFD models provide the most accurate predictions of all the deterministic models because they divide a given space into thousands of smaller volumes. However, since these are still models, they are not absolute in their depiction of reality. In addition, they are much more expensive to use because they are computationally intensive. Because of their expense, complexity, and intensive computational needs, CFD models require much greater scrutiny then do zone models. It is much more difficult to provide multiple runs of CFD models to check sensitivity to a variety of factors such as design fire cell resolution or ventilation.

   Zone models are more widely used than CFD models because they provide reasonably accurate predictions in much less time. It is easier to assess sensitivity of different parameters with zone models, because they generally run much faster and the output is much easier to interpret. Prediction of fire growth and spread has a large number of variables associated with it; consequently, the zone models with their crudeness and speed have advantages over the more complex CFD models.Purpose-built models (also known as stand-alone models) are similar to zone models in their ease of use. However, purpose-built models do not provide a comprehensive model; instead, they predict the value of one variable of interest. For example, such a model can predict the conditions of a ceiling jet at a specified location under a ceiling but a zone model would "transport" those conditions throughout the enclosure.

   Purpose-built models might or might not be manifested as computer software. Those that are not manifested as such are referred to as hand calculations. These purpose-built models are, therefore, simple enough that the data management capabilities of a computer are not necessary. Many of these calculations are found in the *SFPE Handbook of Fire Protection Engineering.*

(2) *Types of Evacuation Models.* There are three categories of evacuation models that can be considered: single-parameter estimation methods, movement models, and behavioral simulation models.
   (a) Single-parameter estimations are generally used for simple estimates of movement time. They are usually based on equations derived from observations of movement in non-emergency situations. They can be hand calculations or simple computer models. Examples include calculation methods for flow times based on widths of exit paths and travel times based on travel distances. Sources for these methods include the *SFPE Handbook of Fire Protection Engineering* and NFPA's *Fire Protection Handbook.*
   (b) Movement models generally handle large numbers of people in a network flow similar to water in pipes or ball bearings in chutes. They tend to optimize occupant behavior, resulting in predicted evacuation times that can be unrealistic and far from conservative. However, they can be useful in an overall assessment of a design, especially in early evaluation stages, where an unacceptable result with this sort of model indicates that the design has failed to achieve the life safety objectives.
   (c) Behavioral simulation models take into consideration more of the variables related to occupant movement and behavior. Occupants are treated as individuals and can have characteristics assigned to them uniquely, allowing a more realistic simulation of the design under consideration. However, given the limited availability of data for the development of these models, for their verification by their authors or for input when using them, their predictive reliability is questionable.

(3) *Tenability Models.* In general, models will be needed here only to automate calculations over time of exposure effect equations.

Copyright 2014 National Fire Protection Association (NFPA). Licensed, by agreement, for individual use and download on October 4, 2014 to LEADER and READER for designated user PATTARAPORN SRITRAKOOL. No other reproduction or transmission in any form permitted without written permission of NFPA. For inquires or to report unauthorized use, contact licensing@nfpa.org.

(4) *Other Models.* Models can be used to describe combustion (as noted, most"fire models" only characterize fire effects), automatic system performance, and other elements of the calculation. There are few models in common use for these purposes, so they are not described further here.

(5) *Sources of Models.* Compendia of computer fire models are found in Friedman's "An International Survey of Computer Models for Fire and Smoke" and the *SFPE Computer Software Directory*. Within these references are models that were developed by the Building Fire Research Laboratory of the National Institute of Standards and Technology, which can be downloaded from the Internet at http://www.bfrl.nist.gov/864/fmabs.html. Evacuation models in all three categories are discussed in the *SFPE Handbook of Fire Protection Engineering* and NFPA's *Fire Protection Handbook*.

(6) *Validation.* Models undergo limited validation. Most can be considered demonstrated only for the experimental results they were based upon and/or the limited set of scenarios to which the model developers compared the model's output.

The Society of Fire Protection Engineers (SFPE) has a task group that independently evaluates computer models. As of January 1998, this task group was preparing to finish its first evaluation and had chosen a second model to evaluate. Until more models can be independently evaluated, the model user must rely on the available documentation and previous experience for guidance regarding the appropriate use of a given model.

The design professional should present the strength of the evidence presented for the validity, accuracy, relevance, and precision of the proposed methods. The authority having jurisdiction, when deciding whether to approve a proposal, should consider this data as well. An element in establishing the strength of scientific evidence is the extent of external review and acceptance of the evidence by peers of the authors of that evidence.

Models have limitations. Most are not user-friendly. For that reason, experienced users will be able to construct more reasonable models and better interpret output than novices. It is for these reasons that the third-party review and equivalency sections are provided. These statements are not meant to discourage the use of models, but rather to indicate that they need to be used with caution by those well versed in their nuances.

(7) *Input Data.* The first step in using a model is to develop the input data.

The heat release rate curve specified by the user is the driving force of a fire effects model. If this curve is incorrectly defined, the subsequent results are not usable. In addition to the smoldering and growth phases that are specified as part of the scenario definition, two additional phases are needed to complete the input heat release rate curve, steady burning, and burnout.

Steady burning is characterized by its duration, which is a function of the total amount of fuel available to be burned. In determining the duration of this phase, the designer needs to consider how much fuel has been assumed to be consumed in the smoldering and growth phases, and how much is assumed to be consumed in the burnout phase that follows. A common assumption is that the burnout phase is the mirror image of the preceding phases, with a reversed heat release rate curve and the same amount of fuel consumed in the burnout phase as in the growth phase. Depending on the assumptions made regarding the amount of fuel consumed during burnout, the time at which this phase starts should be easy to determine.

Bear in mind that the preceding discussion assumes that the burning objects are solid (i.e., table, chairs, etc.). If liquid or gaseous fuels are involved, the shape of the curve will be different. For example, smoldering is not relevant for burning liquids or gases, and the growth period is very short, typically measured in seconds. [Peak heat release rate depends primarily on the rate of release, or on the leak rate (gases and liquid sprays), or on the extent of spill (pooled liquids).] The steady burning phase is once again dependent upon the amount of fuel available to burn. Like the growth phase, the burnout phase is typically short (e.g., closing a valve), although it is conceivable that longer times can be appropriate, depending on the extinguishment scenario.

Material properties are needed (usually) for all fuel items (initial and secondary) and the enclosure surfaces of involved rooms or spaces. For all fires of consequence, it is reasonable to assume that the fire receives adequate ventilation. If there is insufficient oxygen, the fire will not be sustained and, thus, will go out. An overabundance of oxygen is only a concern in special cases (e.g., hermetically sealed spaces), when a fire does not occur due to dilution of the fuel (i.e., a flammable mixture is not produced). Therefore, given that the scenarios of interest can occur in nonhermetically sealed enclosures, it is reasonable to assume that adequate ventilation is available and that if a fire starts it will continue to burn until it either runs out of fuel or is extinguished by other means. The only variable that could need to be assumed is the total vent width.

Maximum fire extent is affected by two geometric aspects: burning object proximity to walls and overall enclosure dimensions.

Conservatively, when a fire is considered to be "against a wall" or "in a corner" the effective heat release of the fire can be doubled and quadrupled, respectively. In order for the burning object to be considered against the wall or in the corner, it needs to be either touching the enclosure surface or within 50.8 mm (2 in.). The reasoning behind this convention is that a wall effectively cuts the fire plume in half, while a corner results in one-quarter of the plume if the burning object is closer to the center of the room. Conceptually, the same amount of combustible vapors are produced, regardless of the burning object's position, but the presence of walls/corners results in a smaller volume in which to burn them. In other words, walls and corners effectively concentrate the flammable vapors resulting from pyrolysis of the fuel.

The room dimensions affect the time required for a room to flashover. Simply stated, for a given amount and type of fuel under the same ventilation conditions, a small room will flashover before a large room will reach flashover. In a large room with a small amount of fuel, a fire will behave as if it is outside (i.e., with adequate oxygen to burn and no concentration of heat). If the fuel package is unchanged but the dimensions of the room are decreased, the room will begin to have an affect on the fire (assuming adequate ventilation). The presence of the (relatively smaller) enclosure results in the buildup of a hot layer of smoke and other products of combustion under the ceiling. This in turn feeds more heat back to the seat of the fire, which results in an increase in the pyrolysis rate of the fuel and thus increases the amount of heat energy released by the fire. The room enclosure surfaces themselves also contribute to this radiation feedback effect.

Probabilistic data is expressed as either a frequency (units of inverse time) or a probability (unitless, but applicable to a

Copyright 2014 National Fire Protection Association (NFPA). Licensed, by agreement, for individual use and download on October 4, 2014 to LEADER and READER for designated user PATTARAPORN SRITRAKOOL. No other reproduction or transmission in any form permitted without written permission of NFPA. For inquires or to report unauthorized use, contact licensing@nfpa.org.

stated period of time). An example of the former is an expected number of failures per year, and the range of the latter is between 0 and 1, inclusive. Probabilities can be either objective or subjective. Subjective probabilities express a degree of belief that an event will occur. Objective probabilities are based on historical data and can be expressed as a reliability (of a component, system, etc.).

A.5.4.3.3 Procedures used to develop required input data need to preserve the intended conservatism of all scenarios and assumptions. Conservatism is only one means to address the uncertainty inherent in calculations and does not remove the need to consider safety factors, sensitivity analysis, and other methods of dealing with uncertainty. The *SFPE Engineering Guide to Performance-Based Fire Protection Analysis and Design of Buildings* outlines a process for identifying and treating uncertainty.

A.5.4.4 An assessment method translates input data, which can be test specifications, parameters or variables for modeling, or other data, into output data that is measured against the performance criteria. Computer fire models should be evaluated for their predictive capability in accordance with ASTM E 1355, *Standard Guide for Evaluating the Predictive Capability of Deterministic Fire Models*.

A.6.1.2 It is preferable for buildings engaged in wood processing either to be of Type I or II construction or to be sprinklered, or both, if a hazard analysis deems it is warranted.

A.6.2 Refer to NFPA 80A, *Recommended Practice for Protection of Buildings from Exterior Fire Exposures*, for buildings using open space separation techniques.

A.6.2.2.3 Penetrations for piping and ductwork used to convey combustible materials should not penetrate fire walls. Fire dampers in ducts handling wood particulates have not been shown to provide reliable operation over the lifetime of the facility. The wood waste often clogs dampers, rendering them inoperative.

A.6.2.2.5.2 Such doors should be marked "Not An Exit." The unique requirements of doors in explosion-resistant walls preclude their use as a means of egress, because NFPA *101, Life Safety Code*, requires exit doors from high-hazard areas to swing in the direction of exit travel.

A.6.4.1 Structural steel that is out of the reach of normal vacuuming or sweeping operations and that has horizontal ledges (such as I-beams or U-shaped channels in the up or sideways position) should be boxed in with a limited-combustible material to eliminate pockets for dust accumulation. New interior walls should be specified as being smooth and with minimal ledges.

Surfaces not readily accessible for cleaning should be inclined at an angle of not less than 45 degrees from the horizontal to minimize dust accumulation.

As much as a 60 degree angle of inclination could be necessary for maximum effectiveness with many types of wood dust. Horizontal surfaces that can benefit from a sloped cover include girders, beams, ledges, and equipment tops.

A.6.4.2.1 See NFPA 68, *Standard on Explosion Protection by Deflagration Venting*, for guidance on predicting the effects of dust deflagrations based on the strength of resisting and relieving walls.

A.6.4.2.2 A relatively small initial dust explosion will disturb, and suspend in air, dust that has been allowed to accumulate on the flat surfaces of a building or equipment. This dust cloud provides fuel for the secondary explosion, which usually causes the major portion of the damage. Recognizing and reducing dust accumulations is, therefore, a major factor in reducing the hazard in areas where a dust hazard can exist. Prudent operating policies would advise evaluating dust levels whenever a visible dust cloud exists. When dust accumulations are identified, an engineering analysis should be performed to determine whether a deflagration hazard exists.

Using a bulk density of 320 kg/m^3 (20 lb/ft^3) and an assumed concentration of 350 g/m^3 (0.35 oz/ft^3), it has been calculated that a dust layer that averages 3.2 mm (⅛ in.) thick covering the floor of a building is sufficient to produce a uniform dust cloud of optimum concentration, 3 m (10 ft) high, throughout the building. This situation is idealized, and several factors should be considered.

First, the layer will rarely be uniform or cover all surfaces and, second, the layer of dust will probably not be completely dispersed by the turbulence of the pressure wave from the initial explosion. However, if only 50 percent of the 3.2 mm (⅛ in.) thick layer is suspended, this material is still sufficient to create an atmosphere within the explosible range of most dusts.

Consideration should be given to the proportion of the building volume that could be filled with a combustible dust concentration. The percentage of floor area covered can be used as a measure of the hazard. For example, a 3 m × 3 m (10 ft × 10 ft) room with a 3.2 mm (⅛ in.) layer of dust on the floor is obviously hazardous and should be cleaned. Now consider this same 9.3 m^2 (100 ft^2) area in a 188 m^2 (2025 ft^2) building; this also is a moderate hazard. This area represents about 5 percent of a floor area and is about as much coverage as should be allowed in any plant. To gain proper perspective, the overhead beams and ledges should also be considered. Rough calculations show that the available surface area of the bar joist is about 5 percent of the floor area. For steel beams, the equivalent surface area can be as high as 10 percent.

Based on this information, the following guidelines have been established:

(1) Dust layers 3.2 mm (⅛ in.) thick can be sufficient to warrant immediate cleaning of the area.
(2) The dust layer is capable of creating a hazardous condition if it exceeds 5 percent of the building floor area.
(3) Dust accumulation on overhead beams and joists contributes significantly to the secondary dust cloud and is approximately equivalent to 5 percent of the floor area. Other surfaces, such as the tops of ducts and large equipment, can also contribute significantly to the dust cloud potential.
(4) The 5 percent factor should not be used if the floor area exceeds 1858 m^2 (20,000 ft^2). In such cases, a 93 m^2 (1000 ft^2) layer of dust is the upper limit.
(5) Due consideration should be given to dust that adheres to walls, since this is easily dislodged.
(6) Attention and consideration should also be given to other projections, such as light fixtures, that can provide surfaces for dust accumulation.
(7) Dust collection equipment should be monitored to be certain it is operating effectively. For example, dust collectors using bags operate most effectively between limited pressure drops of 0.74 kPa to 1.24 kPa (3 in. to 5 in.) of water. An excessive decrease or low drop in pressure indicates coating that is insufficient to trap dust.

These guidelines will serve to establish a cleaning frequency.

Copyright 2014 National Fire Protection Association (NFPA). Licensed, by agreement, for individual use and download on October 4, 2014 to LEADER and READER for designated user PATTARAPORN SRITRAKOOL. No other reproduction or transmission in any form permitted without written permission of NFPA. For inquires or to report unauthorized use, contact licensing@nfpa.org.

A.6.4.2.3 See NFPA 68, *Standard on Explosion Protection by Deflagration Venting*, for guidance on the strength of relieving and resisting walls.

A.7.3.2 Refer to NFPA 499, *Recommended Practice for the Classification of Combustible Dusts and of Hazardous (Classified) Locations for Electrical Installations in Chemical Process Areas*.

A.7.4.1 This maximum allowable temperature is slightly below the temperature at which exothermic pyrolysis is reported to commence in cellulosic materials. It is consistent with that permitted in *NFPA 70, National Electrical Code*, for Class II hazardous areas with wood (Group G) dusts. However, fire losses have occurred where steam piping was identified as the ignition source for wood dust deposits. This is possible because prolonged exposure to elevated temperatures will cause the decrepitation of the cellulose into pyrolysis products that can have lower ignition temperatures than those normally associated with wood. In permitting maximum surface temperatures above 100°C (212°F) (the minimum steam temperature), it is assumed that appropriate personnel safety measures are in place and that a rigid housekeeping program exists to keep dust accumulations under control. Equipment surfaces in hard-to-access locations that will collect dust and are likely to be cleaned less frequently should be insulated to keep the maximum surface temperature below 100°C (212°F).

A.7.4.2 Bearings in dusty or inaccessible areas where overheating can cause ignition of fires or explosions should be equipped with journal temperature alarms.

A.7.5 Diesel-powered front-end loaders suitable for use in hazardous locations have not been commercially available. The following provisions can be used to reduce the fire hazard from diesel-powered front-end loaders used in Class II hazardous areas as defined in Article 500 of *NFPA 70, National Electrical Code*:

(1) Only essential electrical equipment should be used, and wiring should be in metal conduit. Air-operated starting is preferred, but batteries are permitted to be used if they are mounted in enclosures rated for Type EX hazardous areas.
(2) Where practical, a water-cooled manifold and muffler should be used.
(3) Loaders that are certified to meet the Mine Safety and Health Administration (MSHA) criteria (formerly Schedule 31) found in 30 CFR 36, "Approval Requirements for Permissible Mobile Diesel-Powered Transportation Equipment," are also acceptable.
(4) The engine and hydraulic oil compartments should be protected with fixed, automatic dry chemical extinguishing systems.
(5) Loaders should have a high degree of maintenance and cleaning. Frequent cleaning (daily in some cases) of the engine compartment with compressed air could be necessary. Periodic steam cleaning should also be done.
(6) Loaders should never be parked or left unattended in the storage building.

A.7.6 Serious consideration should be given to installing lighting that is suitable for Class II, Division 2, Group G hazardous locations in all woodworking and wood processing areas where wood dust is likely to occur. Such lighting will permit the use of blowdown methods for cleaning while the lighting is operating. Failure to use lighting suitable for Class II, Division 2, Group G hazardous locations will necessitate locking out and tagging out the lighting power supply before commencing blowdown, and explosion-proof lighting will have to be provided on a temporary basis while blowdown is being conducted.

A.7.7.3 Wherever possible, heating units should be installed in compartments separate from woodworking and wood processing activities and processes. Guidance is available in FM 6-7, *Fluidized Bed Combustors and Boilers*, and FM 6-13, *Waste Fuel-Fired Boilers*.

A.7.8 Particular attention should be paid to the potential for a lightning strike on roof-mounted dust collectors, cyclones, and ductwork. The electromagnetic pulse from a lightning strike to these pieces of equipment can cause severe damage to any electronic equipment, including spark detection and extinguishing systems, installed on such equipment. The impulse current from a direct lightning strike on roof-mounted dust collectors, cyclones, and ductwork can ignite wood waste within this equipment that can subsequently be conveyed to other locations in the facility.

A.7.9 Grounding and bonding information can be found in NFPA 77, *Recommended Practice on Static Electricity*. Because cellulosic materials are highly hydroscopic, active humidity controls can be useful in limiting the tendency to accumulate static electrical charge.

A.7.10 Most fires involving woodworking and wood processing facilities are ignited by the process equipment. Whenever wood or wood-derived products and materials are cut, shaped, planed, or smoothed, heat is generated in the process. This heat can be sufficient to raise the wood or wood-derived materials to their ignition point, igniting a fire. It is important to note that most cellulosic materials will begin to pyrolyze (decompose due to heat) as their temperatures are raised above 200°C (392°F). At these temperatures, this process is endothermic, requiring the investment of heat to continue. However, once the temperature of the wood or wood-derived material attains temperatures in excess of approximately 280°C (536°F), the chemical reactions involved in pyrolysis change and become exothermic, producing more heat than is needed to continue the process. This results in the ignition of the wood waste generated by the equipment. Whenever the wood is visibly discolored (i.e., singeing or charring), an ignition has occurred and burning material has been introduced into the dust collection (wood waste conveyance) system.

A.7.10.1 High feed rates generate more heat per unit of time and unit of wood processed. This increased rate of heat generation increases the likelihood that embers and sparks will be produced that can lead to the ignition of wood particulates conveyed in the pneumatic wood waste removal system. This is particularly important when working with wood species that exhibit wide variations in density and hardness with the same board, such as maple, oak, cedar, and hickory.

A.7.10.2.1 The quantity of heat generated during a woodworking operation is affected by the sharpness of the tool(s). Whether the tool is a saw, shaper, router, planer, or one using abrasives, properly sharpened cutters operate more coolly and are far less likely to ignite stock or wood waste.

A.7.10.2.2 Abrasive belts have been identified as the source of ignition in a number of serious fires. This necessitates careful management of the abrasive condition. Once grit begins loading up, all of the power dissipated by the machine motor is essentially converted to frictional heat. Extreme care should be employed with abrasive shaping and surfacing machines for this reason.

Copyright 2014 National Fire Protection Association (NFPA). Licensed, by agreement, for individual use and download on October 4, 2014 to LEADER and READER for designated user PATTARAPORN SRITRAKOOL. No other reproduction or transmission in any form permitted without written permission of NFPA. For inquires or to report unauthorized use, contact licensing@nfpa.org.

A.7.11.2 In some cases, the use of spark-resistant tools might be advisable.

A.7.12.2 Collection points used for manual cleanup, such as vacuum hoses or floor sweeps, should incorporate features for prevention of foreign material entry. Magnetic separators, grates, or screening are typical protective features. Further information is available in NFPA 654, *Standard for the Prevention of Fire and Dust Explosions from the Manufacturing, Processing, and Handling of Combustible Particulate Solids.*

A.7.13.2 Consideration should be given to the potential for overheating due to dust entry into bearings. Bearings should be located outside the wood waste stream, where they are less exposed to dust and more easily inspected and serviced. Sealed bearings are preferable.

A.7.14.2 Building exhaust fans over hot presses, veneer dryers, and finishing area or booth exhaust fans are particularly susceptible to this problem.

A.7.15.1 There have been some reports of autoignition of wood particulates where large quantities of particulates have been stored undisturbed for extended periods of time. The common denominator in these events has been particulates with relatively high polymerizable oil contents stored in large piles for extended periods of time where the heat generated by the polymerization reaction cannot easily and rapidly dissipate.

A.7.15.3 Linseed, tung, and similar oils have been identified as having a spontaneous ignition history.

A.7.18 Electric appliances, including but not limited to coffee pots and portable space heaters, have been found to cause fires in industrial occupancies. The use of these appliances should be controlled by management to limit the probability of ignition.

A.8.1.1 These systems include, but are not limited to, dust collection systems and pneumatic bulk conveying systems transporting material from hogs, hammermills, grinders, flakers, planers, refiners, sanders, and chippers.

A.8.2.1 Assume that all wood waste in an enclosed dust collector is potentially deflagrable, unless a dust deflagration test demonstrates it is not. Wood waste usually has a dust deflagration risk where the mean particle size is less than 420 microns and where as little as 10 percent of the mixture contains dust less than 80 microns in size. Only weak deflagrations are likely where the mean particle size exceeds 420 microns.

Wood waste is commonly produced by the following:

(1) Fine cutting (e.g., sanding), which produces a dust of very fine particle size. This dust is usually assumed to be deflagrable.
(2) Machining and sawing softwoods, which produces chips, shavings, and coarse dust with only a small amount of fine dust. This process does not normally create a deflagration risk, so long as the fine dust is not allowed to separate and accumulate within confined spaces.
(3) Sawing and machining hardwoods, which often produces wood waste containing considerably more dust than that from softwood. This dust is usually assumed to be deflagrable.
(4) The processing of MDF chipboard and similar boards by machining and sawing. This process can be expected to produce waste containing much fine dust. This dust is usually assumed to be deflagrable.

When mixed processing of a variety of woods occurs, the waste produced should be assumed to be deflagrable.

A.8.2.1.4 For example, dust collectors having combustible filter bags and rubber belt conveyors would pose a fire hazard, even if only green wood particulate were handled.

A.8.2.1.5 The hazard threshold used is less than 100 percent to allow for concentration increases that can occur due to system imbalances and minor changes or adjustments to material or airflow rates, and at fans, elbows, hopper feed points, and so forth. For systems that have intermittent operation and/or multiple particulate entry points, the maximum concentration should be based on the simultaneous maximum material flow rate from all entry points. For example, the dust loading for a pneumatic system that collects dust from two panel sanders should be based on the material being removed from panels passing through both sanders at the same time, even if this happens randomly.

A.8.2.2.1.2 Dust collectors for wood working should be labeled, "For Wood Dust Only — Do not use with metal dust or operations that generate sparks or flammable vapors, to avoid fire and/or explosion." It is the responsibility of the owner of the dust collector to provide this warning label or a similar one on the dust collector, if the label is not provided by the dust collector manufacturer.

In addition, similar warning labels could be located at woodworking machines.

A.8.2.2.1.4 The preferred method, to assure that the dust collection system is in operation whenever a machine is in operation, is to electrically interlock the dust collector and machines. The dust collector should remain on for at least 1 minute longer than the last machine to assure that the particulate is exhausted from the main duct.

A.8.2.2.1.5 While conditions can vary, 20 m/sec (4000 ft/min) is generally accepted as a minimum conveying velocity for wood particulate. Actual capture velocity can be much higher; the manufacturer should be consulted for specific recommendations.

A.8.2.2.2.1.2 A ground wire or other grounding system for PVC pipe is not acceptable.

A.8.2.2.2.1.6 Where dampers or gates are necessary to achieve balance on systems that have been altered, they should be permanently fastened in place. Dampers should not be opened and closed during operation so that more suction can be diverted to other machines/branches, because the imbalance of airflow can cause insufficient velocity in the main duct, which will result in an accumulation of wood waste and become a potential fuel source for fire.

An automatic damper that is located in a branch duct and dedicated to an individual woodworking machine, and that opens when the machine is activated and closes when the machine is deactivated, should not be used if it will cause insufficient velocity [less than 20 m/sec (4000 ft/min)] in the main duct.

Variable speed controls, whether manual or automatic, should not be used if they can cause insufficient velocity in the main duct.

Sufficient velocity can be achieved by a number of methods, including the following:

(1) Automatic damper and variable speed controls (if the branch pipe with the damper does not feed into the main duct but goes directly to the dust collector)
(2) Dampers controlled by programmable controllers
(3) Other engineered systems that maintain design velocity

Copyright 2014 National Fire Protection Association (NFPA). Licensed, by agreement, for individual use and download on October 4, 2014 to LEADER and READER for designated user PATTARAPORN SRITRAKOOL. No other reproduction or transmission in any form permitted without written permission of NFPA. For inquires or to report unauthorized use, contact licensing@nfpa.org.

A.8.2.2.2.1.9 Resinous woods such as southern yellow pine, spruce, and fir tend to yield wood dust that is tacky and can adhere to duct interiors. This is especially true on ducts serving abrasive planers and sanders, which also introduce heat input to the dust.

Hardwoods such as maple, oak, hickory, and cherry lack the resins of the soft woods and are much less likely to coat duct interiors with accumulated dust.

A.8.2.2.2.1.9(A) Ductwork subject to dust accumulation should have sufficient access for inspection and fire department access, as determined by the configuration, length, and size of the duct.

A.8.2.2.2.2 Equipment having a history of producing frequent sparks includes, but is not limited to, large belt sanders and planers having automatic feed systems, hammermills, pulverizers, and flakers. This protection is generally employed to protect the downstream equipment rather than the duct itself.

This protection also deserves consideration on dust collection systems for less hazardous equipment (e.g., saws) if the loss potential for property damage or interruption to production is high.

A.8.2.2.2.2(2) Abort gates are most commonly used on systems that have the air-moving device located upstream of any dust collection equipment (i.e., positive pressure systems). This arrangement facilitates clearing the ductwork of all burning material by stopping material infeed and leaving the fan running when the abort gate activates. This is the recommended arrangement and operating sequence when this alternative is used. Figure A.8.2.2.2.2(2)(a) shows the normal and aborted airflow conditions.

It is possible, but more costly, to use two abort gates to accomplish the same duct-clearing operation on systems that have the air-moving device located downstream from the collector. Figure A.8.2.2.2.2(2)(b) shows how this is done.

Negative pressure systems that incorporate a single abort gate upstream of the dust collector will not clear the ductwork once the abort gate activates, and this design is not recommended. This design requires complete interior inspection and cleaning or flushing of the ducting prior to abort reset and system restart to be sure there are no smoldering embers lying in the duct.

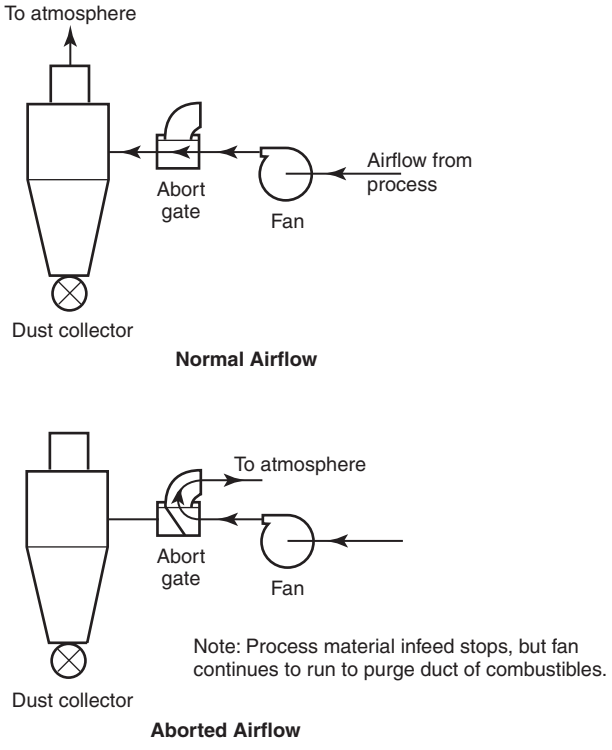

FIGURE A.8.2.2.2.2(2)(a) Aborting of Positive Pressure Systems.

A.8.2.2.2.3 Although criteria are given for designing and operating pneumatic conveying ducts close to or above the MEC, it is safer and preferable to operate below this threshold by keeping airflow sufficiently high to prevent the maximum concentration of dust in the duct from exceeding 75 percent of the MEC. The one exception to this is bulk transport using high-pressure ductwork that utilizes smaller-diameter and stronger duct than low-pressure systems. These systems transport particulate in very high concentrations and have an excellent loss history relative to deflagration propagation or damage.

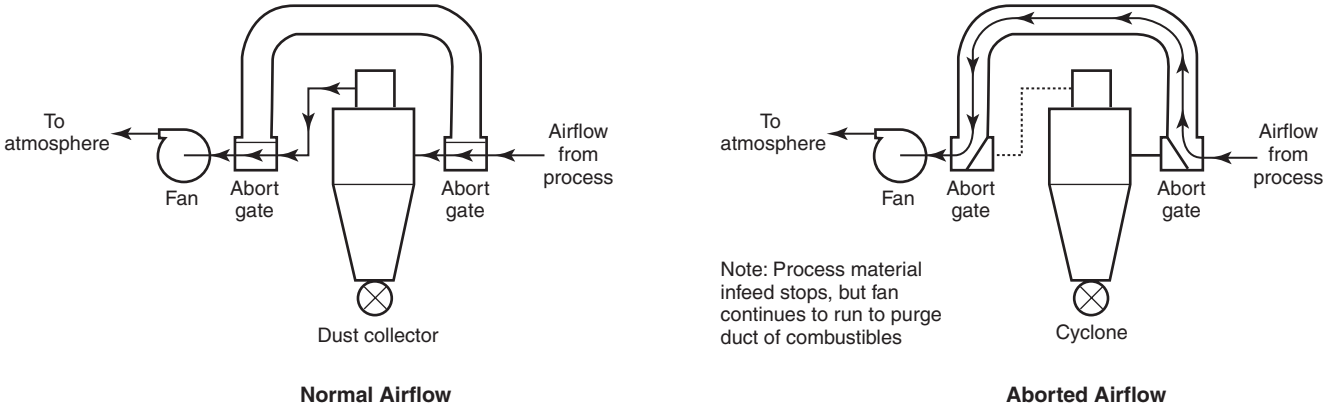

FIGURE A.8.2.2.2.2(2)(b) Aborting of Negative Pressure Systems.

Copyright 2014 National Fire Protection Association (NFPA). Licensed, by agreement, for individual use and download on October 4, 2014 to LEADER and READER for designated user PATTARAPORN SRITRAKOOL. No other reproduction or transmission in any form permitted without written permission of NFPA. For inquires or to report unauthorized use, contact licensing@nfpa.org.

A.8.2.2.2.3(1) High-pressure conveyance lines (blowpipes) made of steel or iron pipe with Schedule 40 or greater wall thickness normally meet the strength requirement of 8.2.2.2.3(1). Administrative controls such as lockout/tagout or inspection programs to ensure that access hatches are in place before equipment is operated are recommended.

A.8.2.2.2.3(2) The manufacturer of the listed explosion suppression system should be consulted to determine the maximum reduced deflagration pressure to be expected with their protection hardware. Welded steel of 12-gauge minimum thickness is normally strong enough to prevent failure during an explosion, especially for small ducts.

A.8.2.2.2.3(3) Deflagration relief vent design with relief pipes and reduced deflagration pressure guidelines are found in NFPA 68, *Standard on Explosion Protection by Deflagration Venting*. Welded steel of 12-gauge minimum thickness is normally strong enough to prevent failure during a deflagration, especially for small ducts.

A.8.2.2.2.3(4) Deflagration relief vent design and reduced deflagration pressure guidelines are found in NFPA 68, *Standard on Explosion Protection by Deflagration Venting*. The manufacturer of the listed flame-quenching device should be consulted to determine the maximum reduced deflagration pressure to be expected with their protection hardware. Welded steel of 12-gauge minimum thickness is normally strong enough to prevent failure during a deflagration, especially for small ducts.

A.8.2.2.2.3(5) Deflagration relief vent design and reduced deflagration pressure guidelines are found in NFPA 68, *Standard on Explosion Protection by Deflagration Venting*. Welded steel of 12-gauge minimum thickness is normally strong enough to prevent failure during a deflagration, especially for small ducts.

A.8.2.2.2.3(6) Ducts located outdoors do not pose an undue potential for property damage or expose plant personnel or the public at large to the risk of injury from rupture of the duct. Therefore, they might not need strong construction.

A.8.2.2.4.1 Although conditions can vary, 20 m/sec (4000 ft/min) is generally accepted as a minimum conveying velocity for wood particulate.

Many believe that fans should be located only on the clean-air side of dust collection equipment because this removes the fan, a potential ignition source, from the dusty airflow. Where deflagrable dusts are being conveyed, turbulence induced by fans can also accelerate deflagration burning, increasing the pressure rise (and damage potential) to the fan and duct in proximity to the fan inlet and outlet. However, the frequency of fans being an ignition source is very low.

Additionally, there is an advantage to having the fan upstream of the collection equipment. The fan can be left running to rapidly purge the duct of any material and discharge it from the system through a fast-acting abort gate. When actuated by a spark detector located a sufficient distance upstream, such an arrangement can effectively keep burning material from entering the dust collection equipment where the fire and explosion potential is known to be extremely high. Although this can also be done with negative pressure systems where the fan is located on the downstream side of the collector, it is a much more complex and expensive solution.

A.8.2.2.4.2(1) The clean-air side of the dust collector is the preferred location for the fan or blower. When wood particulates are passed through the fan, there is the potential for ignition of the wood particulate due to the impact of the impeller, frictional heat from the fan motor, and bearings or fan impeller failure. Acceptable means for addressing this ignition potential are dependent upon the moisture content, particle size distribution, and minimum explosible concentration of the fines.

A.8.2.2.4.2(2) No experience in the forest products industry is known to the members of the Technical Committee that indicates that an ignition of green wood particulates has occurred in the context of the conveyance systems. However, the user should keep in mind that wood particulates will lose moisture as they are conveyed. Variations in feedstock will also result in variations in the moisture content of the conveyed material. The conveyed material should be sampled at all extremes of operations to verify that the conditions that allow transport without downstream fire protection exist reliably. Furthermore, the wood particulates in such systems should be routinely sampled to ensure that the conveyance system is not operating outside of the design parameters.

A.8.2.2.4.3 Designing a fan housing that can withstand maximum unvented explosion pressures is generally impractical except for very small fans. Also, the fan wheel or blower impeller acts as an obstruction to deflagration propagation and increases the air turbulence, both of which can increase deflagration pressures. Because of this, explosion suppression systems generally need to inject suppression agent into both the inlet and exhaust openings of the fan housing. Also, explosion venting might not be practical on the fan housing itself, so vents need to be located on the inlet and outlet ducts as close to the fan housing as practical. The duct vents should have an area equal to the cross-sectional area of the duct.

A.8.2.2.5.1.3 Dust collectors that have rotary airlocks on their hopper outfeed sections should not be given credit for drainage through the airlocks. Dedicated drain ports with counterweighted doors or other latching means designed to open under a slight head of water pressure are commonly provided near the bottom of hopper sections to drain fire protection water. The drain doors are adjusted so that they just barely stay closed during normal operation, and the weight of any water accumulation then causes them to open and drain off the water.

A.8.2.2.5.1.4 Although alternatives to out-of-doors locations are permitted, allowing indoor locations under special circumstances, outdoor locations are highly recommended. It is not advisable to locate dust collectors on the roofs of buildings.

A.8.2.2.5.1.4(7) It is good practice to protect an enclosureless dust collector with either an automatic sprinkler located above the unit or a spark detection and extinguishing system in the main duct, upstream of the unit.

A.8.2.2.5.2 Adequate drainage (automatic dumping) should be provided to prevent structural collapse.

A.8.2.2.5.3 Some dust collectors, especially bag filters designed to collect dust on the inside of the filter media, can operate without any enclosure, but they sometimes have very lightweight, self-venting enclosures just for weather protection.

A.8.2.2.5.3(1) When dust collectors are designed and installed in accordance with 8.2.2.5.3(1), administrative controls such as lockout/tagout or inspection programs to assure that access hatches are in place before equipment is operated are recommended.

Copyright 2014 National Fire Protection Association (NFPA). Licensed, by agreement, for individual use and download on October 4, 2014 to LEADER and READER for designated user PATTARAPORN SRITRAKOOL. No other reproduction or transmission in any form permitted without written permission of NFPA. For inquires or to report unauthorized use, contact licensing@nfpa.org.

A.8.2.2.5.3(2) The manufacturer of the listed deflagration suppression system should be consulted to determine the maximum reduced deflagration pressure to be expected with their protection hardware.

A.8.2.2.5.3(3) If relief pipes are used in conjunction with deflagration relief vents to direct the vented gases to a safe location, the reduced deflagration pressure will be higher than if no relief pipes were present. Deflagration relief vent design and reduced deflagration pressure requirements are found in NFPA 68, *Standard on Explosion Protection by Deflagration Venting*. If listed flame-quenching devices are used in conjunction with deflagration relief vents to extinguish flames in the vented gases, the reduced deflagration pressure will be higher than if no flame-quenching devices were present. The manufacturer of the listed flame-quenching device should be consulted to determine the maximum reduced deflagration pressure to be expected with the protection hardware.

A.8.2.2.6.1 It is recommended that a secondary filter be used as part of the return air duct to prevent dust propagation into the building interior due to primary filter failure. See ACGIH's *Industrial Ventilation — A Manual of Recommended Practice*.

A.8.2.2.6.4 The requirement for the return air diversion is in place to protect the occupants from the products of a dust collector fire. This requirement is normally achieved with the use of abort gates that are activated by spark detectors. However, the committee has not achieved consensus regarding the design of this feature.

One approach is to locate the spark detection and abort gate on the inlet duct to the dust collector, which is shown in Figure A.8.2.2.6.4(a). With this approach, the burning material is detected by the spark detectors as it travels towards the dust collector. The operation of the spark detectors actuates the abort gate release, diverting the burning material from the dust collector. This prevents the burning material from entering the dust collector and thereby prevents the recirculation of smoke, flame, and other fire products back to the occupied portion of the facility. An additional advantage to this approach is protection of the dust collector.

This approach works best when a fan is located upstream of the dust collector so that the airflow from the fan accelerates the closure of the abort gate. However, fans are often ignition sources and this approach has the disadvantage of initiating comparatively frequent dust collection system shutdowns due to sparks.

The second approach is shown in Figure A.8.2.2.6.4(b). In this design the spark detectors and abort gate are located on the clean air side of the dust collector. With this approach the return air diversion relies upon sparks from burning bags and ignited dust flowing through holes in the bags for the stimulus to actuate the abort gate. This approach has the advantage that it does not divert the airflow except under circumstances of an established fire in the dust collector. However, it does not prevent the introduction of burning material into the dust collector.

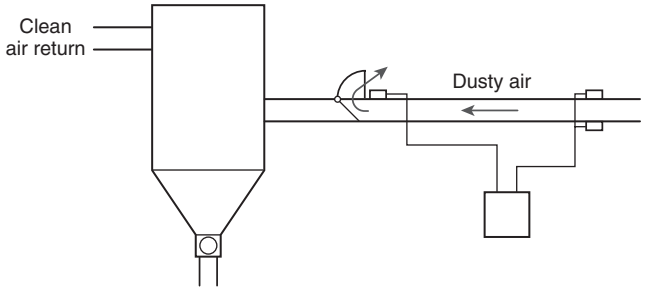

FIGURE A.8.2.2.6.4(a) Spark Detection and Abort Gate on Inlet Duct to the Dust Collector.

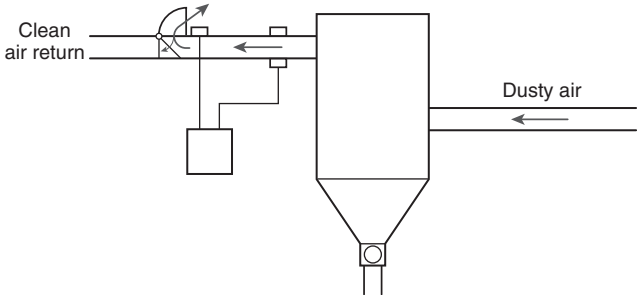

FIGURE A.8.2.2.6.4(b) Spark Detection and Abort Gate on Clean Air Side of the Dust Collector.

The experience of many committee members leads them to believe that most dust collector explosions arise from fires within the dust collector. When the automatic bag-cleaning feature operates, it produces a dust cloud within the collector and this dust cloud is ignited by the pre-existing fire. Consequently, once a fire has become established within the dust collector, the airflow should not be shut down as that causes accumulated dust to slough off the bags, producing a dust cloud that can deflagrate. Instead, the airflow should be maintained. This limits the rate at which dust can slough off of the bags and minimizes the probability that a large dust cloud and resulting deflagration will occur. The flow of air through the dust collector also removes heat from the dust collector. Where the dust collector represents a critical or high value asset, a water deluge system can be added to minimize damage to the dust collector.

A.8.2.2.6.4.1 Dust collection systems 2.4 m^3/sec (5000 cfm) and smaller represent less hazard due to their relatively small size and can be adequately managed with spark detection and extinguishment rather than requiring the additional expense of an abort gate.

A.8.2.2.6.4.2 Dust collection systems greater than 2.4 m^3/sec (5000 cfm) in capacity represent a greater inherent hazard and risk and were deemed to require the inherently greater reliability of an abort gate as opposed to extinguishing systems. Where extinguishing systems can be shown to be equally reliable to the abort gate, it can be used as a performance-equivalent alternative design pursuant to Chapter 5.

A.8.2.2.6.4.2(3) Manual interaction at the abort gate is required so that the damper can be examined for any damage that could render it unsuitable for continued use.

A.8.2.3.1.2 Dust collection pickup ducts are often used to pull a slight negative pressure on equipment such that it operates at a pressure lower than ambient conditions outside the equipment. This can effectively minimize dust emissions by offsetting any slight pressurization of the equipment that occurs during the normal conveying of material.

Copyright 2014 National Fire Protection Association (NFPA). Licensed, by agreement, for individual use and download on October 4, 2014 to LEADER and READER for designated user PATTARAPORN SRITRAKOOL. No other reproduction or transmission in any form permitted without written permission of NFPA. For inquires or to report unauthorized use, contact licensing@nfpa.org.

A.8.2.3.1.5 An example of a case in which no other practical location exists, and bearings or bushings can therefore be permitted inside equipment, would be hanger bearings on long screw conveyor shafts.

A.8.2.3.1.7 Gaskets or smooth machined mating surfaces are generally required for dusttight operation.

A.8.2.3.2 Typical examples of these conveyors are most rubber belt conveyors and bucket elevators. Misalignment is commonly detected by switches mounted near the belt edges. A mistracking belt will contact the switch and shut down the drive. Rotary motion detectors on belt drive and tail spools are commonly used to detect a slipping belt. Motion detection on the drive spool with no corresponding motion detected on the tail spool would indicate a slipping belt and shut down the drive.

Rubber belt conveyors represent a special design challenge that is not specifically addressed in NFPA 13, *Standard for the Installation of Sprinkler Systems*. Valuable additional guidance is available in FM 7-11, *Belt Conveyors*.

A.8.2.3.3.2 Administrative controls such as lockout/tagout or inspection programs are recommended to ensure that access hatches are in place before equipment is operated.

A.8.2.4 The intent of this section is to prevent spread of fires and explosions via conveying systems from high-risk processes into work spaces, storage facilities, or other critical processing systems beyond those immediately involved. It is not the intent to isolate each and every piece of conveying equipment from each other. Consideration of when and where to isolate should be based on the frequency of ignition sources and the potential severity of a loss (e.g., property damage, downtime, and personal injury).

A.8.2.4.2 Except for passive devices, such as flame front diverters, backblast dampers, and material chokes, detection and speed of actuation of the device is critical. For fire isolation, the normal material conveying speed is used to determine the necessary speed of isolation devices. For deflagrations, however, flame propagation through conveying systems will be much faster than normal conveying speeds, and it can also accelerate. Isolation design, device construction, and installation should be done only by engineering consultants, manufacturers, and vendors familiar with the hazards and capabilities and limitations of the hardware. Table A.8.2.4.2 lists some commonly used isolation devices.

NFPA 654, *Standard for the Prevention of Fire and Dust Explosions from the Manufacturing, Processing, and Handling of Combustible Particulate Solids*, also discusses various types of explosion isolation devices.

Table A.8.2.4.2 Commonly Used Isolation Devices

Isolation Device	Application	Limitations
Diversion Devices		
Abort gate	Fire and deflagration	Used on pneumatic conveying ducts. Most practical on positive pressure pneumatic systems (two abort gates needed for negative pressure systems).
Pant leg gate	Fire and deflagration	Used on gravity flow chutes at material transfer points.
Slide gate	Fire only	Used on the bottom of mechanical conveyors that slide material through the conveyor enclosure (e.g., screw and flight conveyors).
Reversing conveyor	Fire only	Used with mechanical conveyors (usually screw conveyors). Not effective with dusty material unless other blocking devices (e.g., rotary feeders) are also used.
Flame front diverter	Deflagration only	Used on pneumatic conveying ducts.
Blocking Devices		
Rotary feeders	Fire and deflagration	Must have metal-tipped vanes with narrow wall gap 0.18 mm (0.007 in.). Rubber-tipped vanes cannot be relied on. Must be stopped to remain effective.
Slide gate	Fire and deflagration	Used to block pneumatic ducts, chutes, and so forth. Usually actuated with high-pressure gas cylinder.
Flame front extinguishers	Deflagration only	Single-shot pressurized chemical extinguishers, typically used on ducts or enclosed conveyors.
Backblast dampers	Deflagration only	Used on pneumatic systems to prevent flow counter to normal flow.
Material chokes	Deflagration only	Normally used on mechanical screw conveyors or at material transfer points.

Copyright 2014 National Fire Protection Association (NFPA). Licensed, by agreement, for individual use and download on October 4, 2014 to LEADER and READER for designated user PATTARAPORN SRITRAKOOL. No other reproduction or transmission in any form permitted without written permission of NFPA. For inquires or to report unauthorized use, contact licensing@nfpa.org.

A.8.3 Refer to FM 7-99, *Heat Transfer by Organic and Synthetic Fluids*.

As shown in Figure A.8.3, a typical thermal oil heating system includes the following:

(1) Thermal oil heater
(2) Primary circulation loop and pumps to keep oil flowing through the heater
(3) Secondary thermal oil loop(s) to circulate oil through the utilization equipment
(4) Expansion tank to hold the increased volume of the oil as it is heated
(5) Drain tank to receive oil intentionally drained from the system or expelled through system relief valves, overflow pipes, or vents

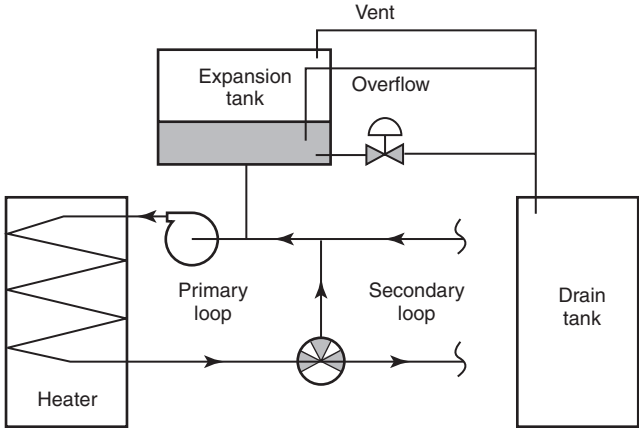

FIGURE A.8.3 Typical Thermal Oil Heating System Components.

Firing can be by conventional gas or oil burners or by wood dust suspension burners. Large heaters can burn wood waste on a grate, in a fluidized sand bed, or by more complex gasification methods that partially burn and gasify wood waste on a grate using sub-stoichiometric under-fire airflow, and complete the combustion in an upper plenum using secondary air injection. Combustion gases, typically in the 927°C to 1093°C (1700°F to 2000°F) range, then heat the thermal oil via radiant and/or convection air-to-oil heat exchangers. The heat exchanger can be a separate, stand-alone unit or an integral part of the heater. Refractory lining is needed for the burner, heat exchanger, and any interconnecting duct until gas temperatures are reduced to about 427°C (800°F) or less. Conventional water-tube boilers have been adapted to heat thermal oil, with thermal oil replacing the water.

Nonvaporizing thermal oil systems are the norm in wood processing or woodworking occupancies and are preferred because they do not pose a significant room explosion hazard. Vaporizing systems are rare and are discouraged because an oil leak can expel boiling oil/vapor into the surrounding space and form an explosive atmosphere.

Most nonvaporizing systems in these occupancies have expansion tanks operating at atmospheric pressure, with open vents to equalize pressure in the expansion tank as the oil level changes during operation.

Some nonvaporizing systems have oversized expansion tanks that are completely sealed and operate under slight pressure [less than 103.426 kPa (15 psi)] as the heated oil rises in the tank. This arrangement eliminates the possibility of overflowing the expansion tank.

The thermal fluids used are special organic or synthetic oils developed for this type of application, with flash points of several hundred degrees Fahrenheit. For maximum thermal efficiency, the oil is usually heated above its flash point, making an oil spill especially hazardous. Also, because of the high oil temperature, it is sometimes necessary to keep the oil circulating through the heat exchanger at all times to prevent oil breakdown and tube fouling, especially with wood waste–fired heaters. Diesel-driven pumps or emergency generators are usually provided for this purpose in case of a power outage, with an emergency bypass cooling loop to extract heat from the oil when normal utilization equipment would also be inoperable. This continuous oil pumping can increase damage if an oil leak and fire involving the primary heating loop occurs, and special controls and interlocks are needed.

Thermal oil heating systems are used to heat equipment such as lumber dry kilns, plywood veneer dryers, plywood and composite board presses, and wood particulate and fiber dryers, and even for building heat.

A.8.3.1.1(1) The larger systems in use in wood processing plants have total oil capacities up to 170,345 L (45,000 gal). The smaller ones hold as little as 379 L to 757 L (100 gal to 200 gal).

A.8.3.1.1(2) Thermal oil flow rates can be as high as 49,210 L/min (13,000 gpm) in large multiopening press secondary loops. Primary loops on these systems typically flow oil up to 9464 L/min (2500 gpm). The very small systems containing just a few hundred gallons could have flow rates under 379 L/min (100 gpm).

A.8.3.1.1(3) The ability to detect loss of fluid in the system is critical in reducing the amount of oil that can spill. Small leaks can also spill large quantities of oil over time if not detected. Various leak detection methods along with their benefits and limitations are listed in Table A.8.3.1.1(3).

A.8.3.1.1(4) If the method of leak detection used does not specifically identify the section of the system where the leak is occurring, controls and interlocks will need to isolate as many sections of the system as required to keep the largest credible spill at an acceptable level, regardless of the location of the leak.

The most common isolation technique is to close off all secondary thermal oil loops to reduce the exposure to important equipment. Where feasible, the primary loop should not leave the cutoff heater area. This will keep the secondary loop connections and control valves in the dedicated cutoff area. If the secondary loop piping is long and/or of large diameter, it can be necessary to have additional valves on pipe runs to reduce the amount of oil that can spill.

Another isolation technique is to close off the downcomer pipe from the expansion tank, removing that volume from the spill potential in the primary and secondary loops. Concurrently, a drain line on the expansion tank is sometimes opened to empty the expansion tank into a storage tank or other safe location.

Isolation of the heater oil piping is a special problem for heaters that need to keep oil flowing due to very high oil temperatures, fuel supplies that cannot be instantly shut off (e.g., wood pile burners), and/or high latent heat storage in heater refractory. Stopping oil flow in these instances before temperatures are reduced can foul the heat exchanger tubes, necessitating their cleaning or replacement. Emergency diesel-driven pumps and emergency bypass cooling heat exchangers are usually provided in these cases so that secondary loops can be isolated without shutting down the primary loop. One major exception to stopping the flow through these heaters is when an oil leak and fire

Copyright 2014 National Fire Protection Association (NFPA). Licensed, by agreement, for individual use and download on October 4, 2014 to LEADER and READER for designated user PATTARAPORN SRITRAKOOL. No other reproduction or transmission in any form permitted without written permission of NFPA. For inquires or to report unauthorized use, contact licensing@nfpa.org.

Table A.8.3.1.1(3) Leak Detection Methods: Benefits and Limitations

Leak Detection Method	Benefits and Limitations
Expansion tank low oil limit switch Installed near bottom of tank.	Simple, but tank is emptied before alarm initiated. Can't differentiate between large and small leaks. Might be enough for very small systems.
Expansion tank low oil deviation switch Installed higher in tank, below the normal maximum oil level when system is at operating temperature.	Simple, and alarms quicker than low limit switch, but changes in oil type, quantity, or operating temperature will change alarm point. Must be bypassed during startup heating process.
Expansion tank flowmeter Installed on downcomer pipe connecting tank with primary oil loop combined with control programming to continuously monitor flow rate.	More complex control logic, but can detect early loss of oil if flow rate is greater than instrument sensitivity. Might not detect small leaks over time.
Expansion tank dynamic oil level detection Using hydrostatic pressure transducer combined with control programming to continuously monitor oil level.	Most complex control logic, but most flexible and most accurate. Can detect absolute oil level changes as small as ±0.25 in., up or down, as well as rate of change. Self-adjusts to oil level in tank during startup.
Dual flowmeters On specific pipe sections (e.g., inlet/outlet of loops, heaters, etc.) combined with control programming to continuously monitor differential oil flow.	More complex control logic, but can identify larger leaks in specific pipe sections. Mass flowmeters required for accuracy if change in oil temperature (i.e., volume) between meter locations. Will not detect small leaks below combined accuracy of two flowmeters.
Single flowmeters On pipe sections combined with control programming to continuously monitor oil flow.	Control logic is simpler, but cannot detect smaller leaks below the accuracy of the flowmeter.
Low oil pressure switches or pressure transducers Combined with control programming to continuously monitor oil pressure.	Control logic is simpler, but cannot detect smaller leaks below the accuracy of the instrumentation. Cannot differentiate between other conditions causing low pressure (e.g., pump failure, partially closed valve, etc.). Not appropriate where low oil pressure starts emergency oil pumps.
Liquid spill detection Near floor level in pits, drains, or sumps around specific equipment.	Simple and able to locate leaks at specific equipment. Might be able to detect leaks early if containment area is small. Subject to false alarm from other liquids such as wash-down hoses, etc.
Acoustic transducers On specific pipe sections combined with sophisticated monitoring control system to continuously listen for abnormal sound signatures.	Potentially able to detect small leaks, but requires calibration setup to filter out normal system sounds. No experience available on feasibility of this method on thermal oil systems.

are occurring in the heat exchanger itself. In this case, the desirable action is to actuate an extinguishing system in the heat exchanger, shut down the primary circulation pump(s), and drain or isolate the oil in the expansion tank. In addition to oil leak detection, a second detection means, such as high stack temperature or high stack combustibles, is usually provided to confirm a fire in the heat exchanger.

Valves that need to operate during a spill emergency should be fail-safe, and if manually actuated, should have remote actuation capability. One common method of implementing this is to use spring-loaded ball valves with pneumatic actuators. The spring would cause the valve to go to the full open or full closed position, whichever is the appropriate safe position, when control air pressure is removed. The valve can be made fail-safe by installing a section of plastic tubing in the control air supply line at the valve. A leak and/or fire at the valve will burn through the plastic tubing and cause the valve to go to the safe position.

For all sections of piping that are deadheaded by closed isolation valves, it is necessary to provide a means of negative pressure relief as hot oil cools to prevent possible collapse of piping, vessels, and so forth. This is most easily done by drilling a small hole through isolation valve gates/balls and through check valve clappers, or by small open tubing around the isolation valves to permit a very small amount of oil to flow as it cools and contracts. If the expansion tank has not been isolated, it will supply oil slowly to provide the necessary negative pressure relief to the system. If it has been isolated, its isolation valve should also have the small drilled hole or bypass tubing to allow the expansion tank to equalize the negative pressure.

A.8.3.1.1(5) When pumps are shut down, gravity will provide the motive force for oil to flow to system low points. Backflow can occur counter to the normal flow direction under these circumstances, so all flow paths, valve types and locations, and relative elevations should be considered when designing isolation systems. A secondary loop arrangement is shown in Figure A.8.3.1.1(5)(a) with a three-way control valve on the secondary loop oil supply leg.

During normal operation, the three-way valve diverts a portion of the primary loop flow into the secondary loop to maintain temperature in the utilization equipment. Oil can freely flow into or out of the expansion tank as the oil volume changes with temperature. If an emergency shutdown occurs due to an oil leak in the secondary loop, the pump is stopped and the three-way valve moves to full bypass position, isolating the normal oil infeed line

Copyright 2014 National Fire Protection Association (NFPA). Licensed, by agreement, for individual use and download on October 4, 2014 to LEADER and READER for designated user PATTARAPORN SRITRAKOOL. No other reproduction or transmission in any form permitted without written permission of NFPA. For inquires or to report unauthorized use, contact licensing@nfpa.org.

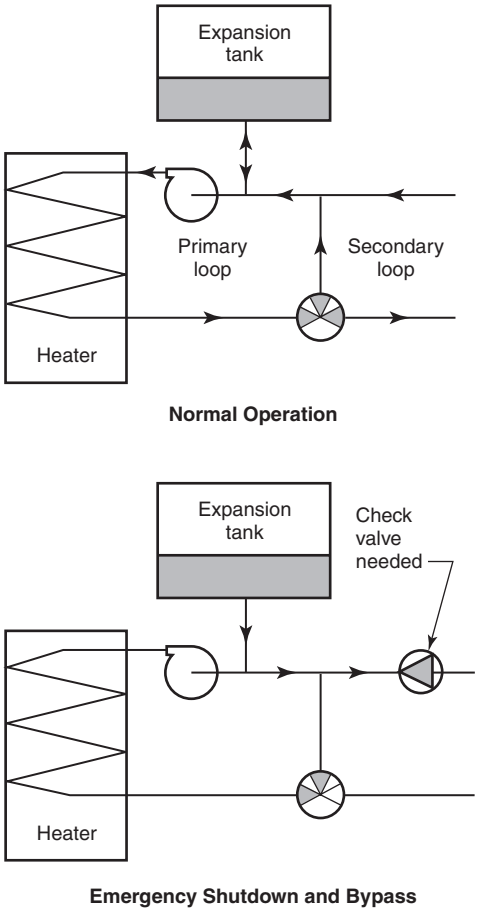

FIGURE A.8.3.1.1(5)(a) Three-Way Valve on Supply Leg.

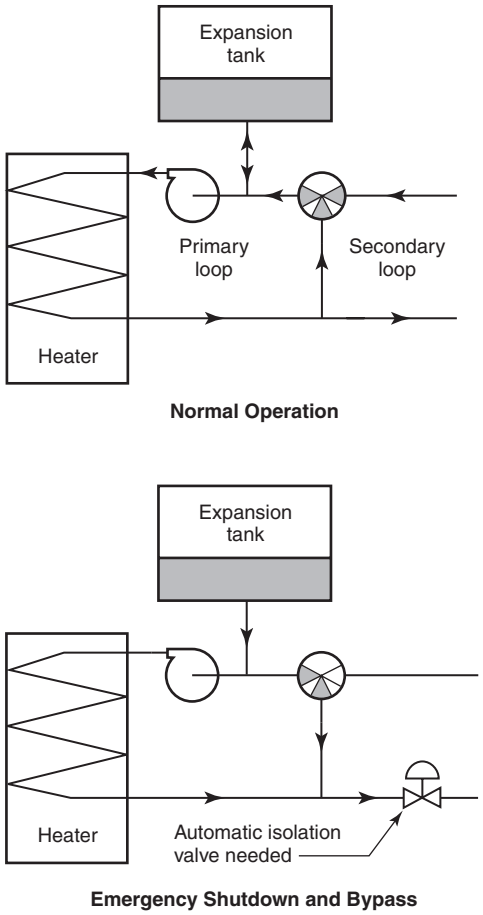

FIGURE A.8.3.1.1(5)(b) Three-Way Valve on Return Leg.

to the secondary loop. However, because the normal secondary loop return line does not have a check valve, the expansion tank and any oil pipe higher than the point of breakage in the secondary loop can drain back through the return pipe. A check valve is needed as shown to reduce the largest credible spill from a break in the secondary loop. Other means would be needed (e.g., rapid drain of the expansion tank and isolation valve on expansion tank downcomer pipe) to isolate the expansion tank if the leak were in the primary loop.

In Figure A.8.3.1.1(5)(b) a three-way oil control valve is located on the secondary loop return leg.

In this case, gravity flow will feed oil into the secondary loop in the normal flow direction, so a check valve cannot be used to stop the unwanted flow. An automatic isolation valve interlocked with the emergency shutdown sequence is needed to block the flow. This valve should fail in the closed (safe) position. Because this arrangement is more complex and requires active interlocks and valves, it is less reliable than the operation in Figure A.8.3.1.1(5)(a). Placing the three-way control valve on the oil supply leg with a simple passive check valve on the return leg is, therefore, the preferable arrangement.

Figure A.8.3.1.1(5)(a) and Figure A.8.3.1.1(5)(b) are just two examples of flow control valving arrangements used on the larger thermal oil systems. Smaller systems might not have a secondary loop or might have just a single modulating ball valve for flow control. However, the need to evaluate all paths that oil can take to reach a point of leakage is no different for smaller systems. The same isolation concepts apply when trying to control or minimize the amount of oil that can leak, regardless of the system size.

A.8.3.1.2 It can be anticipated that 3.79 L (1 gal) of spilled oil will spread out and cover approximately 1.9 m^2 (20 ft^2) on a flat floor.

A.8.3.1.3(3) It can be assumed that a pool of thermal oil will burn down at a rate of about 25 mm (1 in.) every 7 minutes.

A.8.3.2.1 When thermal oil is used for building heat, a central heat exchanger should be provided to heat a nonflammable liquid, such as a water/glycol solution, that can then be piped throughout the facility without increasing the fire hazard. This method is strongly preferred even though exceptions are given to allow direct pumping of thermal oil.

While welded connections minimize the risk of an oil leak, there have been significant losses involving thermal oil leaks from cracked welds. If the areas having thermal oil heating have automatic sprinkler protection, it is good practice to design the sprinklers for the thermal oil hazard if that poses a higher fire demand.

The largest credible thermal oil spill should take into consideration the ability of the thermal oil system to automatically detect oil leaks, shut down pumps, and isolate piping loops. The sprinkler demand for a thermal oil spill fire is normally greater than the demand for the woodworking occupancy. Thus, greater

Copyright 2014 National Fire Protection Association (NFPA). Licensed, by agreement, for individual use and download on October 4, 2014 to LEADER and READER for designated user PATTARAPORN SRITRAKOOL. No other reproduction or transmission in any form permitted without written permission of NFPA. For inquires or to report unauthorized use, contact licensing@nfpa.org.

cost is incurred for the sprinkler protection of the facility when this exception is followed. This additional cost will normally pay for the nonhazardous fluid heat exchanger system.

When alternatives to 8.3.2.1(1) and 8.3.2.1(2) are elected, they demand far greater sprinkler delivery density and the design area can be larger, impacting sprinkler system design.

A.8.3.2.2.2 Mist explosions have been known to occur when thermal oil above its boiling point has been released into an enclosed area. The preferred location for a vaporizing system is, therefore, outside or in a detached building.

A.8.3.2.2.4 For example, when the supports for the thermal oil equipment have fireproofing or automatic sprinkler protection of adequate design to keep structures from collapsing for the expected duration of the largest credible thermal oil spill fire, the hazard is not increased if ground sloping is not employed. In this case, the ground slope requirement can be waived on the basis of the performance-equivalent alternative design.

A.8.3.2.2.5 An example of such a control room is the main forming line and press control room typically found in composite panel plants. Windows in the control room walls will also need to be listed with the same fire rating as the wall or be otherwise protected by automatic fire shutters or dedicated window sprinklers.

A.8.3.2.3.2 This requirement is commonly accomplished by piping the discharge outside or into a thermal oil storage tank.

A.8.3.2.4.1 Overhead routing of thermal oil piping in buildings should be minimized where practical. Options to overhead pipe runs in buildings include running piping underground, outside, or in floor trenches. Proper clearance from combustibles should be determined based on the maximum operating surface temperature of the pipe, taking into account any pipe insulation.

A.8.3.2.4.2 See 8.3.1.1 for guidelines on determining the size of the largest credible thermal oil spill, as referred to in item (1) of the Exception, and commonly used methods for reducing it.

A.8.3.2.4.3 For larger systems with higher pumping rates, isolation normally requires a thermal oil leak detection system, automatic-closing isolation or three-way valves on loop supply legs, check valves to prevent backflow through return legs, and so forth. Refer to 8.3.1.1 for guidelines on determining the size of the largest credible thermal oil spill and commonly used methods for reducing it.

A.8.3.2.4.6 Closed-cell, nonabsorbent insulation is preferred unless all piping and joints are welded. Fibrous or open-cell insulation can act as a wick and soak up leaking oil. The oil can then break down in the insulation and eventually autoignite. Dust accumulations should be routinely removed from all piping on a regular basis.

A.8.3.2.5.1 These criteria should apply, even if the tank is operated as an atmospheric tank, as a safeguard against rupture from overpressurization due to overfilling the thermal oil system, inadvertent accumulation of water from condensation or processes, and so forth.

A.8.3.2.5.2 This requirement is commonly accomplished by piping the vents and drains into a thermal oil storage tank or to a safe area outside.

A.8.3.2.5.3 This requirement is best accomplished by draining the oil into a low-level storage tank. The drain line should be sized such that the majority of the oil will go to the drain tank rather than out a leak elsewhere in the system to accomplish the intent of limiting the size of a spill. Adequate breather vents should be provided, based on the maximum emptying or filling rates.

In some cases, it can be necessary to also have a remotely operable blocking valve or a three-way valve on the pipe connecting the expansion tank to the primary loop piping to quickly and completely isolate the expansion tank during an emergency drain. If this is done, vacuum relief should be provided to prevent collapse of any equipment as the oil reduces in volume as it cools. A simple way of doing this would be to drill a small hole in the blocking valve gate or ball as shown in Figure A.8.3.2.5.3(a) or provide a small-diameter bypass pipe as shown in Figure A.8.3.2.5.3(b).

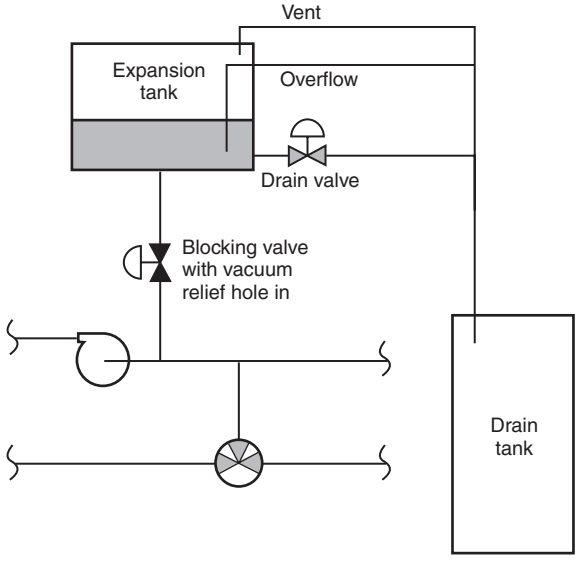

FIGURE A.8.3.2.5.3(a) Expansion Tank Isolation Using Drain and Blocking Valves.

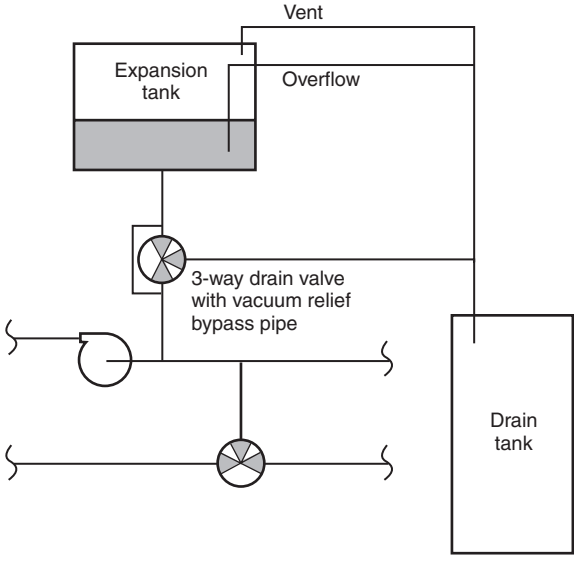

FIGURE A.8.3.2.5.3(b) Expansion Tank Isolation Using a Three-Way Valve.

Copyright 2014 National Fire Protection Association (NFPA). Licensed, by agreement, for individual use and download on October 4, 2014 to LEADER and READER for designated user PATTARAPORN SRITRAKOOL. No other reproduction or transmission in any form permitted without written permission of NFPA. For inquires or to report unauthorized use, contact licensing@nfpa.org.

A.8.3.2.5.4 A properly maintained thermal oil system should not have oil leaks significant enough to require an automatic oil makeup system. Also, an automatic oil refill system can defeat the purpose of some leak detection systems that monitor the oil level in the expansion tank as a means of detecting an oil leak.

A.8.3.2.5.5 Nitrogen is the most commonly used inert gas. Nitrogen use will eliminate oxidation and oil degradation that occurs when the hot oil is in contact with air. It also prevents the possibility of an expansion tank explosion should an ignition source find its way into the expansion tank. For these same reasons, inert gas blanketing is recommended for systems operating at lower pressures.

A.8.3.2.6 The appropriate methods for handling thermal oil depend on the temperature of the oil. When thermal oil is heated to temperatures above its flashpoint, it should be handled as a Class I flammable liquid. At intermediate temperatures, it could be appropriate to handle thermal oil as a Class II liquid. At normal ambient temperatures, many thermal oils are classified as Class IIIB combustible liquids. The oil manufacturer's Material Safety Data Sheet should be referred to for flashpoint data.

A.8.3.2.7.1 *Exception No. 1.* Buildings that have dry pipe sprinkler systems can be prone to accidental tripping due to leaking air pressure. This can cause unnecessary shutdown of the thermal oil system. If a fire detection system were also provided, it could be used to actuate the thermal oil isolation interlocks instead of the sprinkler water flow. Trained operator response in accordance with Exception No. 3 is also an alternative to a sprinkler water flow interlock.

Exception No. 2. If, for example, a plant had a thermal oil heated dryer and a thermal oil heated press, high temperature or activation of a water spray system in the dryer would require stopping flow of thermal oil to the dryer, but the press could continue to operate if desired.

Exception No. 3. To meet this exception, operators should have direct visual observation of the affected area or remote visual observation via closed circuit television. Regular training sessions should be held to assure proper operator response, and an emergency shutdown switch should be located in proximity to all operators expected to fulfill the emergency shutdown function.

A.8.3.2.7.2 Larger plants that have full process control monitoring and alarm annunciation in a constantly attended control room can provide this function in the control room. Other facilities could need one or more emergency shutdown switches more local to the equipment, but the location should not be so close that the switch could not be accessed in a fire emergency.

A.8.3.2.8.3 Fluidized bed burners and burners that combust wood waste on a grate contain a quantity of unburned fuel during normal operation. They cannot be instantly shut off like a conventional gas, oil, or pulverized fuel suspension burner. During any emergency stop or other shutdown that does not fully combust the bed of fuel, or when thermal oil is leaking into the combustion chamber, combustibles (mostly carbon monoxide with small amounts of hydrogen) will be generated due to the latent heat in the fire box and lack of enough air for complete combustion.

Heaters that exhaust directly into a stack can usually prevent the accumulation of explosive concentrations of combustibles by natural draft means. Some facilities recover additional heat from the thermal oil heater stack gas by ducting the burner exhaust into other utilization equipment. Natural draft is unreliable in these instances, and other means, such as continued operation of the Induced Draft (ID) fan at minimum speed, automatic-opening emergency vents on the burner exhaust duct, isolation dampers, or inert gas blanketing systems should be used to prevent buildup of explosive concentrations of combustibles.

Solid fueled burners should be designed per the requirements listed below.

Electrical Classification

The area electrical classification can be general purpose for the handling of Class II or Class III liquids. Consideration should be used in locating electrical devices for ease of access and routine maintenance.

Safety System Features

The thermal oil system should be interlocked to isolate major piping segments in the event of a fire or emergency shutdown to limit the largest credible thermal oil spill. The thermal oil system should be interlocked to actuate in a fail-safe manner. The following should be arranged to actuate:

(1) The supply of heat to the thermal oil system should be shut down (ID fan or fuel supply for gas or suspension burner).
(2) Safety shutoff valves, bypass valves, and or three-way divert valves of fail-safe design should be actuated to isolate all secondary circulating loops from the primary loop.

An accessible, manual, remote emergency shutoff (zone stop) should be provided that is capable of safely shutting down and isolating the heat transfer system in the configuration required to limit the largest credible thermal oil spill. Larger plants that have full process control monitoring and alarm annunciation in a constantly attended control room can provide this function in the control room.

Measuring instrumentation and interlocks should be provided to sound an alarm and automatically shut down the fuel source to the thermal oil heater when any of the safety conditions are detected.

Alarm set point levels should be below or above the auto emergency shutdown levels to monitor the variables and provide an opportunity for operators to correct the problem before conditions reach an emergency shutdown level.

Validation of data should be implemented in the control system to ensure data integrity of all communications and Input/Output (I/O). This validation of input data or communications should use recognized programming method and should include, but not be limited to:

(1) Rack failure
(2) Communication loss to remote I/O racks
(3) Rack power supply failure
(4) I/O card failure
(5) Network communication loss
(6) Network switch failure
(7) Loss of communications
(8) Device cable short wire/open wire
(9) Underrange/Overrange values
(10) External power supply failure

On failure of any of the above validations the logic should force a trip value into the input data tables for the affected device(s).

The system would then shut down as if a trip condition occurred.

Copyright 2014 National Fire Protection Association (NFPA). Licensed, by agreement, for individual use and download on October 4, 2014 to LEADER and READER for designated user PATTARAPORN SRITRAKOOL. No other reproduction or transmission in any form permitted without written permission of NFPA. For inquires or to report unauthorized use, contact licensing@nfpa.org.

Access to programmed safety logic (if used) should be restricted to prevent accidental changes. No forces or jumpers should be applied to any Programmable Logic Controller (PLC) or hardwired safety thermal oil controlled systems.

Safety System Design

Safety system design should take into consideration, but not be limited to, the following criteria:

(1) Manufacture of hardware and PLC (Platform)
(2) Reliability of instrumentation and devices
(3) Safety device identification
(4) Validation of information
(5) Access requirements
(6) Maintenance and testing
(7) Segregation of equipment

Safety Interlocks

The thermal oil system should have the following interlocks, which should be programmed or wired for fail-safe application:

(1) Low thermal oil flow (analog)
(2) High thermal oil temperature at heater outlet (analog or thermocouple)
(3) Expansion tank level for low detection (analog)
(4) Fire zone water flow (discrete)
(5) High oil differential pressure (analog) *(under evaluation)*
(6) High temperature at heater inlet (analog or thermocouple)
(7) Form of system leak detection (optional if rate of change is programmed using expansion tank level)
(8) Fill and drain tank level (analog)
(9) Expansion tank temperature (analog)
(10) Flue gas temperature (analog)
(11) Thermal oil pumps seal leak detection (discrete)
(12) Emergency cooling water make-up detection (discrete)

Definitions of Emergency Shutdown/Trip, Alarm, and Warning

Emergency Shutdown/Trip. System is shut down; solid red visual indication; condition must be cleared, and system restarted.

Alarm. Requires operator intervention, PLC can impose some control functionality to mitigate reaching emergency shutdown condition; flashing red visual indication.

Condition can be acknowledged; if condition is not cleared, the indication will be reactivated.

Warning. Indication to operator; can be acknowledged.

Mandatory Safety Interlocks

All trips should be instantaneous and fail-safe conditioned. The following percentages are estimated nominal targets based on normal operating conditions. All conditions, including start-up, cooldown, and mill specifics, need to be taken into consideration for final set points.

Thermal Oil Flow

Trip: Set at 80 percent of design flow

Interlock: Fuel supply, primary loop isolation and bypass valves, emergency cooling

Alarm: Set at 95 percent of design flow

Actions: Disable heat modulation and limit all devices producing heat to minimum.

High Heater Outlet Oil Temperature

Trip: Set at 110 percent of design temperature not to exceed 274°C (525°F)

Interlock: Fuel supply, primary loop isolation and bypass valves, emergency cooling

Alarm: Set at 105 percent of temperature

Actions: Disable heat modulation and limit all devices producing heat to minimum.

Thermal Oil Expansion Low Tank Level

Trip: Set at 25 percent of tank capacity

Interlock: Fuel supply, primary loop isolation and bypass valves, emergency cooling

Alarm: Set at 35 percent of tank capacity

Actions: Disable heat modulation and limit all devices producing heat to minimum.

Fire Zone Water Flow

Trip: Discrete input from measurement devices

Interlock: Fuel supply, primary loop isolation and bypass valves, emergency cooling

Alarm: Same as above

High Oil Differential Pressure

Trip: Set at *(under evaluation)* of design or normal pressure

Interlock: Fuel supply, primary loop isolation and bypass valves, emergency cooling

Alarm: Set at *(under evaluation)* of design flow

Actions: Disable heat modulation and limit all devices producing heat to minimum.

High Heater Inlet Oil Temperature

Trip: Set at 110 percent of design temperature not to exceed 274°C (525°F)

Interlock: Fuel supply, primary loop isolation and bypass valves, emergency cooling

Alarm: Set at 105 percent of temperature

Actions: Disable heat modulation and limit all devices producing heat to minimum.

Leak Detection Rate of Change

Trip: Set at 110 percent of normal expansion rate

Interlock: Fuel supply, primary loop isolation and bypass valves, emergency cooling

Alarm: Set at 105 percent of normal expansion rate

Actions: Disable heat modulation and limit all devices producing heat to minimum.

Emergency Shutdown (Zone Stop)

Trip: Set on activation of stop

Interlock: Fuel supply, primary loop isolation and bypass valves, emergency cooling

Fill and Drain Tank Level

Trip: Set at 90 percent of tank design level

Interlock: Fuel supply, primary loop isolation and bypass valves, emergency cooling

Alarm: Set at 85 percent of tank design level

Actions: Disable heat modulation and limit all devices producing heat to minimum.

Expansion Tank Temperature

Trip: Set at 110 percent of normal tank operating temperature

Interlock: Fuel supply, primary loop isolation and bypass valves, emergency cooling

Alarm: Set at 100 percent of normal tank operating temperature

Actions: Disable heat modulation and limit all devices producing heat to minimum.

Flue Gas Temperature

Trip: Set at 115 percent of normal operating temperature

Interlock: Fuel supply, primary loop isolation and bypass valves, emergency cooling

Alarm: Set at 110 percent of normal operating temperature

Actions: Visual alarm indication cannot be reset until condition is cleared.

Copyright 2014 National Fire Protection Association (NFPA). Licensed, by agreement, for individual use and download on October 4, 2014 to LEADER and READER for designated user PATTARAPORN SRITRAKOOL. No other reproduction or transmission in any form permitted without written permission of NFPA. For inquires or to report unauthorized use, contact licensing@nfpa.org.

Circulation Pump Seal Leak

Alarm: Set on detection leak

Actions: Visual alarm indication cannot be reset until condition is cleared.

Emergency Cooling Makeup Water

Warning: Set on detection of water flow

Actions: Warning indication.

Annunciation, Display, and Reset of Emergency Shutdown/Trips, Alarms, and Warnings

Emergency shutdown/trips, alarms and warnings should be clearly displayed to the operator as described below. Each event should be accompanied by an audible/visual event suitable for the environment and be capable of 10 dB above normal ambient noise. The reset pushbutton(s) should be wired to the PLC for resetting of the mandatory alarms as specified above, "Definitions of Emergency Shutdown/Trip, Alarm, and Warning."

(1) Emergency Shutdown/Trips
   (a) The operator should be alerted to the trip in the current HMI display.
   (b) A separate light indication (solid red) should be located in "proximity" to the primary pump room area and inside the main operator console room.
   (c) The operator should be able to acknowledge the audible/visual event; however the condition must be cleared before the system can be reset and the system restarted.

(2) Alarms
   (a) The operator should be alerted to the alarm in the current HMI display.
   (b) A separate light indication (flashing red) should be located in "proximity" to the primary pump room area and inside the main operator console room.
   (c) The operator should be able to acknowledge this audible alert; however, all alarms (as described above, "Definitions of Emergency Shutdown/Trip, Alarm, and Warning") should only be reset by pressing local reset pushbuttons, located close to the equipment (primary room; secondary room; heater area). The alert should reappear after a reasonable time, if the condition still exists.

(3) Warnings
   (a) The operator should be alerted to the warning in the current HMI display.
   (b) The operator should be able to acknowledge the alert via normal actions.

Recording and Logging of Data

Data pertaining to the operation of the thermal oil system should be logged in order to evaluate normal and abnormal operation and performance of the system. The following items constitute the minimum data points required for capture:

(1) Thermal oil flow
(2) Primary pump start and stop time
(3) Heater outlet oil temperature
(4) Primary pump faults
(5) Thermal oil expansion tank level
(6) Secondary pump start and stop time
(7) Heater outlet oil pressure
(8) Secondary pump faults
(9) Heater inlet oil temperature
(10) Isolation valve positions
(11) Thermal oil expansion tank level rate of change
(12) Fixed burner system fuel output (gas or suspension burners)
(13) Heater outlet air temperature
(14) All emergency shutdown/trip and alarm conditions
(15) Primary pump amps bypass valve positions
(16) Secondary system temperatures (all available)
(17) Thermal oil fan start and stop time (for bark burner installations)
(18) Fire protection zone flow switch actuation
(19) Thermal oil fan faults (for bark burner installations)
(20) Flue gas temperature
(21) Alarm reset pushbuttons

All data associated with the above system variables should be captured by Industrial SQL and stored in the facility's manufacturing server.

A.8.3.2.8.4 This is commonly done using suitable dampers, isolation gates, waste stacks, and/or burner control logic. The control logic should anticipate all possible operating modes of burners on individual pieces of equipment, whether operating singly or together, to ensure safe startup and shutdown under normal or upset conditions.

A.8.3.2.8.6 An alarm set point should be provided at detection levels earlier than the auto-shutoff levels so as to monitor the variables in 8.3.2.8.6 and provide an opportunity for operators to correct the problem before conditions reach an unsafe level.

A.8.3.2.9.4 One major concern in this regard is where thermal oil is used to heat water, such as in log thaw vats common to oriented strand board plants or in steam generators. Water in the thermal oil piping will flash to steam when heated and can cause overflow of the expansion tank or overpressurization in closed systems.

A.8.3.2.9.5 Typical dangerous scenarios should include all the alarm conditions that result in heater shutdown and isolation of piping and equipment, especially those involving a fire in the area and actions necessary to confirm or stop flow of leaking oil.

A.8.3.2.9.7 With extended exposure to elevated temperatures and/or air in expansion tanks, thermal oils undergo degradation, which can include oxidation and cracking. This degradation can change oil viscosity, heat transfer properties, flash point, and so forth, making the oil unsuitable for continued service.

A.8.3.2.10 Due to a loss history showing that thermal oil fires can be very severe and long lasting, it is highly recommended that automatic sprinkler protection be provided throughout all building areas potentially exposed to a thermal oil spill fire.

A.8.3.2.10.2 A common design for an extinguishing system utilizes a water spray injection system designed on the assumption that all water injected will flash to steam and that the resultant flow of steam will equate to 128 kg (8 lb) per minute per 2.8 m^3 (100 ft^3) of heater or heat exchanger volume. Some thermal oil heater vendors will supply this kind of extinguishing system as a factory option.

When this option is used, prior to water being injected, the heater forced draft fan damper should be closed and the induced draft fan damper moved to the full-open position. This damper arrangement minimizes natural draft airflow through the heater and could deplete the steam concentration and supply air to the fire while simultaneously providing a path for pressure relief from the rapid volume expansion that occurs when the water mist flashes to steam.

Copyright 2014 National Fire Protection Association (NFPA). Licensed, by agreement, for individual use and download on October 4, 2014 to LEADER and READER for designated user PATTARAPORN SRITRAKOOL. No other reproduction or transmission in any form permitted without written permission of NFPA. For inquires or to report unauthorized use, contact licensing@nfpa.org.

Once temperatures are sufficiently reduced in the heater and the fire is extinguished, the water will no longer flash to steam and can collect in the heater enclosure low points. An allowance for draining water and/or unburned thermal oil to a suitable drainage location should be considered.

Inert gas extinguishing systems (e.g., CO_2 or nitrogen) are sometimes used. Although these systems can rapidly extinguish a fire if the concentration can be established and held, they have very little cooling ability. Hot refractory and internal heater surfaces can remain above the autoignition temperature of the thermal oil for many hours. It is critical that the inert gas supply be able to maintain the required extinguishing concentration long enough for the heater's internal surfaces to cool below the thermal oil autoignition temperature, or reignition will occur.

Automatic operation is preferred. One common way of implementing this is with a high/high temperature alarm (i.e., the first high temperature alarm alerts operators of a malfunction, and a second higher temperature alarm actuates the extinguishing system if operator intervention does not correct the high temperature condition). Another method uses two independent signals to trip the extinguishing system (e.g., a signal indicating loss of thermal oil combined with another signal indicating high temperature or high combustibles in the heater exhaust).

A.8.3.2.10.3 Some heaters have auxiliary, diesel-driven standby thermal oil circulation pumps that automatically start if the oil pressure is abnormally low, such as from pump failure or power outage. These standby pumps will also need to be disabled to keep them from automatically starting when the primary pumps shut down, unless they are part of the oil circulation system permitted in the exception.

A.8.4 This equipment typically consists of high-speed rotating machinery that cuts, shears, breaks, or pulverizes wood fractions into smaller pieces. Equipment in this category includes, but is not limited to, hogs, chippers, stranders, flakers, disk refiners, hammermills, and pulverizers.

The size and power of the equipment is sufficient to create high heat and showers of sparks if any foreign material enters the equipment. Tramp metal in the material being processed is a common problem, as are rocks or other foreign material.

Fires and explosions can occur in the equipment and propagate rapidly into downstream equipment. The degree of hazard is primarily a function of the moisture content of the material being processed and the size distribution of the particulate produced by the size reduction equipment.

A.8.4.1.1 Steam-pressurized disk refiners are commonly used in medium-density fiberboard processes.

A.8.4.2.2.1 Dust collection pickup ducts are sometimes used to pull a slight negative pressure on equipment such that it operates at a pressure lower than ambient conditions outside the equipment. This can effectively minimize dust emissions by offsetting any slight pressurization of the equipment that occurs during the normal conveying of material.

A.8.4.2.2.2 Removal of foreign material from the process stream is the single most important method of eliminating ignition sources created by size reduction equipment. Pneumatic separators (also referred to as air separators) are preferred because they can remove not only ferrous metal, but also nonferrous metal, rocks, and other heavy foreign material that can otherwise cause sparks, frictional heat, and equipment damage. Pneumatic separators are strongly recommended when the material being processed is stored on the ground or hauled in from offsite via trucks, rail cars, and so forth. Material to be processed is commonly passed through air separators when reclaimed from storage, with magnetic separators located on the infeed conveyor to the size reduction equipment as well as other strategic points on the conveying system.

A.8.4.2.3 This subsection includes additional requirements for size reduction equipment deemed to have a fire hazard.

A.8.4.2.4 This subsection includes additional requirements for size reduction equipment deemed to have a deflagration hazard.

A.8.4.2.4.2 The manufacturer of the listed explosion suppression system should be consulted to determine the maximum reduced explosion pressure to be expected with their protection hardware.

If relief pipes are used in conjunction with deflagration relief vents to direct the vented gases to a safe location, the reduced explosion pressure will be higher than if no relief pipes were present. Deflagration relief vent design and reduced explosion pressure guidelines are found in NFPA 68, *Standard on Explosion Protection by Deflagration Venting*. If listed flame-quenching devices are used in conjunction with deflagration relief vents to extinguish flames in the vented gases, the reduced explosion pressure will be higher than if no flame-quenching devices were present. The manufacturer of the listed flame-quenching device should be consulted to determine the maximum reduced explosion pressure to be expected with their protection hardware.

Size reduction equipment located outdoors that does not pose an undue property damage loss potential to the property owner or expose plant personnel or the public at large to the risk of injury from an explosion might not need strong construction or any special protection.

A.8.6.1 Enclosed dryers are used for drying plywood veneer and fiberboard. The most common configuration uses vertically stacked horizontal trays that convey the material through the dryer. The trays typically vary from 3 in. to 12 in. (7.6 cm to 30.5 cm) apart vertically, and the material on the top tray obstructs the lower tiers from sprinkler protection at the top of the dryer enclosure. This requires additional protection arranged at the sides for the lower tiers. These dryers typically measure 8 ft to 10 ft (2.4 m to 3 m) in cross-section and can be well over 100 ft (30.5 m) long. A series of access doors extend along both sides of the metal enclosure for maintenance and cleaning access.

A less common wicket-type configuration can be used for drying veneer. This style has the veneer held vertically between metal arms that move horizontally through the dryer, and there is little obstruction to sprinkler water discharged from the top of the dryer enclosure.

Direct-fired gas or oil burners are most common, but wood dust burners are sometimes used. Indirect heating using integral thermal oil heat exchangers is also now being used. Fans circulate heated air from side-to-side across the dryers. Several separate drying zones, defined by internal plenum walls across the dryer cross-section, are typically used for better drying control. An unheated cooling section is provided on the dryer outfeed end. These plenum walls are obstructions that need to be taken into consideration when laying out sprinkler placement.

Conventional horizontal tray-type dryers are open on both sides of the trays to allow air to flow parallel across the material surfaces. Fires in these trays can be protected by flat fan spray nozzles located along both sides of the dryer. Vertical jet-type dryers have a special design that utilizes hollow metal arms across the dryer width to supply the drying air. These arms

Copyright 2014 National Fire Protection Association (NFPA). Licensed, by agreement, for individual use and download on October 4, 2014 to LEADER and READER for designated user PATTARAPORN SRITRAKOOL. No other reproduction or transmission in any form permitted without written permission of NFPA. For inquires or to report unauthorized use, contact licensing@nfpa.org.

have openings that discharge the air perpendicular to the veneer surfaces. The air supply plenum for the drying arms completely isolates the air supply side of the dryer trays from the opposite side. This means fires in these trays can be reached only by flat fan spray nozzles located along the return air side of the dryer.

Dryer enclosures commonly collect combustible dust and resin deposits on all interior surfaces, and material scraps fall and accumulate on the floor. Fires can spread rapidly throughout the entire dryer for this reason. If thermal oil is used for heating, horizontal floor or plenum sections that can collect spilled oil need to be protected from a flammable liquid spill fire.

A.8.6.1.1 The fire protection for the interior of the dryer should be engineered to ensure adequate water density throughout the interior of the unit. Specific engineering guidelines can be found in FM 7-10, *Wood Processing and Woodworking Facilities*.

A.8.6.1.3 The required inspection frequency is best determined for each dryer based on actual operating conditions. Weekly inspection is not unusual. Cleaning by manually activating fixed water spray deluge systems is common and encouraged. This helps clear any foreign material from the deluge piping and nozzles and keeps pipe traps filled with water to help prevent dryer airflow from circulating through the open deluge piping.

A.8.6.1.4 Flash fires can occur across the entire area of dust deposits unless stopped by a physical barrier. Ceiling exhaust fan openings will have the largest accumulations, and the fan motors are frequent ignition sources.

A.8.6.2 Rotary dryers are used in composite panel manufacturing. Construction typically consists of steel drums that are oriented horizontally and rotate on trunnion bearings, similar to a kiln. Dryer drums are commonly 2.4 m to 6 m (8 ft to 20 ft) in diameter and 9 m to 15 m (30 ft to 50 ft) long. The drums have internal baffles, or "flights," which lift the material and advance it through the dryer as the drum rotates. Dryers are typically either single-pass or triple-pass design. In single-pass designs, the material enters one end and exits the other end after traversing the length of the dryer once. Triple-pass designs have three concentric drums and internal baffles, which force the material to traverse the length of the dryer three times before exiting the far end.

Heated airflow is induced through the dryer to both dry the material and assist its movement through the system. Material exiting the drum can be collected in a fall-out chamber called a wind box, or conveyed pneumatically to a cyclone. Dryer exit temperature is used to control the firing rate of the burner. Direct firing of the dryer is typical, with gas, oil, or wood dust used as fuel. Occasionally, waste heat from boilers can be ducted to rotary dryers as a base-load heat source. Indirect thermal oil heating can also be used via oil-to-air heat exchangers.

A.8.6.2.2 A combination of spark detection and extinguishing, water spray deluge, and process isolation devices and interlocks have proven to be highly effective and are recommended. Commonly provided protection features include the following:

(1) Provide a spark detection and extinguishing system on the main airflow duct between the dryer drum and cyclone. The spark extinguishing system should activate every time a single spark is detected. It will reset after a few seconds (if no additional sparks have been detected), and the dryer can continue to operate. The spark counting features available in some approved spark extinguishing systems can be used to shut down dryers when an excessive number of sparks are encountered, but they should never be used as a measure of when to actuate the extinguishing spray.

(2) Provide a second "fail-safe" detection point on the duct between the spark extinguishing nozzles and the cyclone collector. Detection at this location should be interlocked to safely shut down the dryer as follows:
   (a) Isolate the dryer cyclone outfeed to prevent smoldering material from being conveyed into downstream process areas. This should be accomplished by stopping rotary feeders (metal tipped) or diverting material to a fire dump via reversing conveyors or diverter gates. Refer to NFPA 68, *Standard on Explosion Protection by Deflagration Venting*, and NFPA 69, *Standard on Explosion Prevention Systems*, for effective isolation techniques.
   (b) Stop material infeed to the dryer and shut off all dryer heat sources. The dryer conveying fan and dryer drum drive should be left running to purge material from the system and help prevent warping of the drum.
   (c) Initiate an automatic water spray deluge in the dryer cyclone. Automatic sprinklers are a less desirable alternative. Provide a means for water to drain out of the cyclone. Steam should not be used as an extinguishing medium.

(3) Provide high-temperature limit switches on the inlet and outlet of the dryer drum interlocked to initiate all of the functions in A.8.6.2.2(2), as well as actuate water spray deluge in the dryer inlet and outlet.

(4) When the dryer duct on which spark detectors are mounted is subject to resinous accumulations, provide test lights that are mounted across the duct from each detector to facilitate remote testing. An alternative is frequent inspection and cleaning to ensure continuous operability.

(5) Provide rotary dryers, which incorporate a "wind box" on the dryer outlet, where the majority of the conveyed material drops out, with an additional spark detection zone, isolation measures, and water spray deluge protection similar to the main cyclone.

(6) For dryers processing particleboard furnish or other material having a similar high concentration of fines, provide deflagration relief venting on the cyclone if it does not exhaust directly to atmosphere and on the wind box (if present). Use NFPA 68, *Standard on Explosion Protection by Deflagration Venting*, or equivalent, for vent design. Figure D.1(c) and Figure D.1(d) show typical protection schematics and interlock logic for rotary dryers.

A.8.6.2.3 The required inspection frequency is best determined for each dryer based on actual operating conditions. Weekly inspection is not unusual.

A.8.6.3 In addition to rotary dryers, oriented strand board material can be dried in conveyor dryers (also used to dry tobacco). These dryers are similar in size to horizontal tray veneer dryers but are only about half as tall, since only one horizontal conveyor tray is used to dry and move the material through the dryer. These dryers operate at lower drying temperatures that decrease exhaust air emission problems but increase the material dwell time. As many as nine individual dryers, arranged in series, have been needed to get the required material dwell time.

Mechanical conveyors are used to feed material into and collect material from the dryers. The dryer conveyor "belt" is a continuous loop of perforated metal plates about 203 mm (8 in.) wide and 2.4 m (8 ft) long, hinged together along the long edge to form a continuous track belt. Thermal oil indirect heating is common utilizing integral oil-to-air heat exchangers.

Copyright 2014 National Fire Protection Association (NFPA). Licensed, by agreement, for individual use and download on October 4, 2014 to LEADER and READER for designated user PATTARAPORN SRITRAKOOL. No other reproduction or transmission in any form permitted without written permission of NFPA. For inquires or to report unauthorized use, contact licensing@nfpa.org.

Heated air is circulated from side-to-side through several separate heating zones, with the air distribution plenums arranged such that air flows through the perforations in the conveyor belt, perpendicular to the material surface, much like a vertical jet veneer dryer.

A.8.6.3.1 Dryer enclosures commonly collect combustible dust and resin deposits on all interior surfaces, and material scraps fall and accumulate on the floor. Fires can spread rapidly throughout the entire dryer for this reason. Also, thermal oil heating adds the potential for a flammable liquid spill fire inside the dryer.

A combination of spark detection/extinguishing, water spray deluge, and process isolation devices and interlocks have proven to be highly effective and are recommended as follows:

(1) Provide protection inside individual dryer enclosures similar to that in A.8.6.1.1 for horizontal tray veneer dryers [however, exceptions (1) and (2) in 8.6.1.1 do not apply to conveyor dryers].
(2) Provide approved spark detection at dryer outfeed points interlocked to reverse the take-away conveyor and dump the material in a safe location. The conveyor dryer heat source should also be interlocked to shut down, but the dryer belt should continue to run to empty the dryer.

Where fire extinguishing systems are provided for thermal oil utilization equipment, the systems should be designed to protect the equipment from a thermal oil spill fire or from the material being processed, whichever poses the more severe fire hazard.

A.8.6.3.3 The required inspection frequency is best determined for each dryer based on actual operating conditions. Weekly inspection is not unusual. Cleaning by manually activated fixed water spray deluge systems is common and encouraged. This helps clear any foreign material from the deluge piping and nozzles and keeps pipe traps filled with water to help prevent dryer airflow from circulating through the open deluge piping.

A.8.6.4 Flash dryers are used to dry wood fiber in hardboard and medium-density fiberboard manufacturing. They are basically just pneumatic transport blowpipes 1.5 m (5 ft) in diameter, with the conveying air heated to dry the material as it is conveyed. Wet wood fiber is injected via a high-pressure blowpipe into the hot induced air stream at the head end of the dryer tube. Constant diameter dryer tubes can be over 61 m (200 ft) long to get adequate material retention time in the dryer. Some configurations use vertical duct sections with increased diameters to reduce the velocity and increase the material dwell time (similar to wood pulp flash dryers). Dryer exit temperature is used to control the heat-source firing rate.

Some dryers utilize a process known as "blowline blending" where the resin binders, needed to form a rigid panel in the hot press, are added to the fiber before it is injected into the dryer. This is done for better resin mixing with the wood fiber, but it also makes the dried fiber more tacky and subject to buildup in the dryer system.

Both direct firing — using gas, oil, or wood dust burners — and indirect heating — using steam or thermal oil heat exchangers — are common.

A.8.6.4.2 Commonly provided protection features include the following:

(1) Protect flash dryers with spark detection and extinguishing systems, isolation methods, and automatic deluge systems in cyclones similar to A.8.6.2 for rotary dryers. Flash dryer protection differs only in that there is no dryer drum. The "fail-safe" detector should also initiate a water spray deluge at the head end of the dryer tube in addition to the cyclone.
(2) Provide high-temperature limit switches on the dryer duct at the material injection point and inlet to the cyclone. These detectors will act as backup detection to the "fail-safe" spark detector and should initiate the same functions.
(3) Provide flash dryers with explosion protection on the dryer tube and cyclone designed in accordance with NFPA 69, *Standard on Explosion Prevention Systems*. If explosion venting is the protection method selected, vents should be smooth and flush fitting on the inside to prevent material buildup.
(4) Provide a diverter on the fiber injection pipe to direct fiber to a dump area during initial startup until the material flow is uniform.

A.8.6.4.3 The required inspection frequency is best determined for each dryer based on actual operating conditions. Weekly inspection is not unusual for dryers that utilize blowline resin blending.

A.8.6.5 Lumber that is to be dried is first prepared by stacking it in uniform loads, with each layer of lumber separated by a "sticker" of wood approximately 25.4 mm (1 in.) square. The loads of "stuck lumber" are stacked as high as 4.9 m (16 ft) on wheeled carts that run on tracks to convey the loads into each dry kiln compartment. The kiln is then closed, and heated air is circulated through the stacks from side to side until the desired moisture content is reached. This batch process can take several hours to complete.

Kilns can be indirectly heated by steam or thermal oil heat exchangers inside the kiln enclosure, or directly heated by gas-, oil-, or wood dust–fired burners.

Once the drying cycle is complete, kiln loads are removed and placed in a "cooling shed" (usually just a canopy) to cool before the stacks are broken down for further processing of the dried lumber.

Humidifying and Tempering Ovens. The finishing of hardboard panels usually includes a tempering or humidifying process to stabilize the moisture content. This is done in large oven enclosures similar in size to lumber dry kilns. Hardboard panels are stacked up to 3.7 m (12 ft) high on wheeled carts, with spacers between individual panels to permit airflow through each stack. Indirect heating using steam heat exchangers is the most common heat source.

A.8.6.5.1 The following should also be considered when designing protection for dry kilns:

(1) Automatic sprinklers over lumber loads should be located such that the top and sides of the lumber loads are wetted. Consideration should be given to obstructions such as heating coils and movable airflow baffles that could block sprinkler discharge when the kiln is in operation.
(2) Flow of thermal oil through the kiln should be interlocked to stop automatically on sprinkler water flow or detection of oil loss in the kiln-heating loop. Manual shutoff is acceptable where alarms for sprinkler water flow and loss of oil annunciate at an onsite constantly attended location, the oil isolation valve is readily accessible and not exposed by a kiln fire, and the emergency response team includes a trained person assigned to this task.
(3) Hydraulic calculations should include 1900 L/min (500 gpm) for hose streams.
(4) A dry pipe or deluge system should be used if sprinkler piping is subject to freezing when the kiln is idle.

Copyright 2014 National Fire Protection Association (NFPA). Licensed, by agreement, for individual use and download on October 4, 2014 to LEADER and READER for designated user PATTARAPORN SRITRAKOOL. No other reproduction or transmission in any form permitted without written permission of NFPA. For inquires or to report unauthorized use, contact licensing@nfpa.org.

(5) Sprinkler heads should be used with glass bulb–type thermal elements rated for approximately 10°C (50°F) above the maximum normal operating temperature.
(6) Roofs or canopies over kiln cooling shed areas (dry lumber) and infeed areas (green lumber) should have automatic sprinkler protection designed for the equivalent height of lumber storage.

A.8.6.5.6 The required inspection frequency is best determined for each dryer, based on actual operating conditions. Weekly inspection is not unusual.

A.8.9 Dryer systems can require pollution control equipment to reduce emissions of both particulate (e.g., dust, ash, and so forth) and vapors (e.g., volatile organic compounds, or VOCs, known in the industry as "blue haze").

Commonly used particulate collection equipment includes bag filters, wet and dry scrubbers, electrostatic precipitators, and other specially designed hybrid collection devices such as electrified filter beds (EFBs).

Commonly used vapor collection or incineration equipment includes regenerative thermal and catalytic oxidizers (RTOs and RCOs), incineration chambers, and bio-filters. In all cases, the ducts between dryers and vapor collection or control equipment are subject to buildup of combustible deposits. Although insulating ducts can help reduce the rate of condensation deposits, they cannot be relied upon to totally prevent them. In some instances, dryer air exhaust can be ducted into the combustion air supply for fuel burners.

A.8.10.3.1 Adequate drainage should be provided to prevent structural collapse. In addition, a means should be available to remove the contents other than through the facility process to permit the removal of burning material without threatening the rest of the facility. Storage bins and silos should be located outside the building on independent supporting structures and should be accessible for fire fighting. It is not advisable to locate bins or silos on the roofs of buildings.

A.8.10.3.2 Refer to NFPA 68, *Standard on Explosion Protection by Deflagration Venting.*

A.8.10.4.1 A detached building for storage is preferred. Venting should be designed in accordance with NFPA 68, *Standard on Explosion Protection by Deflagration Venting*, and additional guidance can be found in FM 7-76, *Prevention & Mitigation of Combustible Dust Explosions and Fires.* Conventional lightweight, pre-engineered metal panels on steel frame buildings will meet the intent of this recommendation.

A.8.10.4.3 Refer to Section 3-10 of FM 2-8N, *Installation of Sprinkler Systems.*

A.8.11.1.1 A number of options are available for the protection of continuous presses, including, but not limited to, water spray systems, water mist systems, and gaseous extinguishing systems. The design of the protective features should address the unique characteristics of the press.

The system should provide sufficient volume to extinguish any fire in or on the press without causing any structural damage to the belts, hydraulics, oil hoses, or press frame. In case of an oil leak, the system should be able to control the fire until emergency responders arrive.

Continuous presses were introduced in North America in the late 1980s. Continuous presses can be found as large as 10 m to 55 m (33 ft to 160 ft) long, 1.83 m to 3.05 m (6 ft to 10 ft) wide. The fiber mat enters at the inlet and the finished board exits at the outlet at speeds of up to 1.5 m/sec (295 ft/min). This high-production equipment presents a number of new protection design challenges, as follows:

(1) 75,700 L to 113,550 L (20,000 gal to 30,000 gal) of thermal heat transfer oil operating well above its flashpoint
(2) Thousands of gallons of hydraulic oil
(3) Lubrication grease covering frames and surfaces
(4) Dust, fiber, glue, and release agent, all of which are combustibles and make up the mat
(5) Friction of moving parts
(6) Flexible low-pressure hoses for hot thermal oil
(7) Flexible high-pressure hoses for hydraulic oil
(8) Raw material of dry wood fiber, resins, glues, and release agents, all of which are combustibles, moving forward under high pressure and temperatures well in excess of 149°C (300°F)
(9) Return belts that travel in upper and lower heat tunnels that are subject to buildup of fiber, oil, grease, and fumes
(10) The board's ignition upon exposure to oxygen when exiting from the press
(11) Operator errors

Protection by conventional sprinkler systems and deluge systems can be very detrimental to the integrity of the press. Such systems are slow and use large volumes of water, causing too-rapid cooling, which can cause damage to steel frames, hot platens, and steel belts. It is advisable to employ optical flame and spark detection systems for early detection. The detectors activate the fine water mist spray nozzles that protect the area of the fire. A press can typically be split up in five independent zones: inlet, middle, outlet, upper, and lower heat tunnels. The fine droplets will hit the fire and immediately turn into steam, expanding more than one thousand times. The conversion of water to steam cools, and the expansion smothers the fire.

The small droplet size greatly reduces the possibility of damage to steel frames and instrumentation or of warping of the belt. Fine water spray typically requires one-third of the water volume of conventional systems and less cleanup time, less damage, and shorter downtime. Fine water mist sprays have proven themselves most successful in Europe and elsewhere.

The Technical Committee knows of dozens of incidents where continuous presses have caught fire. Most of the fires have caused less than one million dollars in damage, with a few running into multimillion dollars. Conventional fire fighting using hoses has caused more damage, due to the water, to the press frames, belts, and instrumentation than was caused by the initial fire.

Most fires have occurred at the outlet and the upper heat tunnel. The majority of fires can be referred to human error in operation or programming. Most of the fires have occurred in Europe, where the majority of presses are in operation.

A.8.11.2.2 Where thermal oil heating is employed, there is a greater risk of ignition and greater availability of fuel. This condition can warrant the use of deluge protection rather than closed head sprinkler protection.

A.9.1.1 Automatic sprinkler protection is recommended throughout all major woodworking facilities. Press pits, press hoods, and hood ventilating fans should be protected by automatic sprinkler systems, deluge systems, or both. It is important that sprinkler and deluge heads be located so that hard-to-reach places, such as spaces between press cylinders, are properly protected. The design criteria established in this standard reflect research, testing, and loss history accumulated by the industry and internationally recognized research laboratories.

Copyright 2014 National Fire Protection Association (NFPA). Licensed, by agreement, for individual use and download on October 4, 2014 to LEADER and READER for designated user PATTARAPORN SRITRAKOOL. No other reproduction or transmission in any form permitted without written permission of NFPA. For inquires or to report unauthorized use, contact licensing@nfpa.org.

A.9.1.2 The minimum testing and maintenance frequency for spark detection and extinguishing systems should be as given in Table A.9.1.2.

An approved spark detection and extinguishing system should be considered to quench burning material before it can be conveyed into the collecting equipment.

Also, when bag filters are used, with the conveying airflow fan located ahead of the bag filters, a high-speed abort gate activated by infrared spark detectors should be used to divert burning material before it can enter the bag filter. (Refer to T. Frank, "Fire and Explosion Control in Bag Filter Dust Collection Systems.")

A.9.1.3 Galvanized pipe deteriorates more rapidly than plain black steel pipe due to a galvanic reaction that occurs in high-temperature [greater than 54°C (130°F)] and high-humidity environments.

A.9.1.4 Inside, 38 mm (1½ in.) hose stations are recommended throughout all major woodworking facilities. Directional water spray nozzles or combination straight stream water spray nozzles are recommended, since careless use of straight hose streams can cause dust explosions by throwing hazardous quantities of dust into suspension. NFPA 600, *Standard on Industrial Fire Brigades*, should be utilized as a guide for employee training.

A.9.1.6 In areas containing thermal oil equipment or piping, a 9 kg to 14 kg (20 lb to 30 lb) dry chemical–type extinguisher is preferable. Portable or fixed foam or aqueous film forming foam (AFFF) extinguishing equipment is an acceptable alternative.

A.10.2.3 In addition to inspecting the fire and explosion protection systems that could be in place, such a program should include, but not be limited to, inspections of dust collection system components, electrical transformers, switchgear and switches, large motors (e.g., greater than 200 hp), hydraulic and lubricating systems, rotating machinery (e.g., debarkers, chippers, mills, refiners, dryers, and roll presses), and deficiencies with electrical devices (e.g., arcing, lighting, and damaged wiring) in and around dust-producing processes. Arcing switches, worn bearings, worn belts, damaged wiring, and misaligned parts, including gears, pulleys, guards, and fairings, have all been identified as being sources of ignition.

A.10.2.4.1 Recommended inspection items include, but are not limited to, the following:

(1) Fans and blowers should be checked for excessive heat and vibration pursuant to manufacturer's recommendations.
(2) The surfaces of fan housings and other interior components should be maintained free of rust (iron oxide). Such rust can become dislodged and, while transported, strike against the duct walls. In some cases this can cause an ignition of combustibles within the duct.
(3) The interior sections of the collection system (e.g., ducts, fan housings, collectors, and so forth) should be inspected and cleaned frequently enough to prevent accumulation within the system. Combustible deposits thicker than 3.2 mm (⅛ in.) should be removed. The method of cleaning will vary with the nature of the deposits. Lint and dust can be removed with brushes. Soft, gummy deposits are commonly scraped with safety tools. Where the deposits are exceptionally hard, it can be necessary to melt them with steam. Open flames should not be used.
(4) Abort gates and abort dampers should be adjusted and lubricated pursuant to manufacturer's recommendations.

Table A.9.1.2 Minimum Testing and Maintenance Frequency for Spark Detection and Extinguishing Systems

Item	Operation	Weekly	Monthly	Semi-Annual	Comments
Control panel	Clean	X			Visual inspection of all warning/operational lights.
Emergency power	Test			X	See manufacturer's battery test procedure.
Detector and spray nozzle	Test	X*			See manufacturer's detector and spray nozzle test procedure. Remove and inspect strainers.
Detectors/test lights	Maintenance	X†			Inspect and clean.
Water lines	Flush		X		Flush for 2 minutes. Remove and inspect strainer.
Booster pump (if provided)	Test		X		See manufacturer's booster pump test procedure.
Freeze protection	Inspect		X		Check at plant winterization and monthly during freezing.
Rapid speed abort gates	Test			X	See manufacturer's test procedure.

*See manufacturer's test procedure. Where daily automatic detector response testing is provided by external means (test lights), monthly inspection is acceptable.

†The frequency of cleaning should be adjusted, based on the experience at each detector point. Detectors found to be dirty during scheduled cleaning should have their cleaning frequency increased, and those found to be clean can have their cleaning frequency decreased.

Copyright 2014 National Fire Protection Association (NFPA). Licensed, by agreement, for individual use and download on October 4, 2014 to LEADER and READER for designated user PATTARAPORN SRITRAKOOL. No other reproduction or transmission in any form permitted without written permission of NFPA. For inquires or to report unauthorized use, contact licensing@nfpa.org.

A.10.2.4.2 The use of aluminum paint makes the fire hazard worse. If the aluminum flakes off or is struck by a foreign object, the heat of impact could be sufficient to cause ignition of the aluminum particle, thereby initiating a fire.

A.10.3.1 The following standards have explicit requirements for record retention:

(1) NFPA 10, *Standard for Portable Fire Extinguishers*
(2) NFPA 13, *Standard for the Installation of Sprinkler Systems*
(3) NFPA 20, *Standard for the Installation of Stationary Pumps for Fire Protection*
(4) NFPA 24, *Standard for the Installation of Private Fire Service Mains and Their Appurtenances*
(5) NFPA 25, *Standard for the Inspection, Testing, and Maintenance of Water-Based Fire Protection Systems*
(6) NFPA 68, *Standard on Explosion Protection by Deflagration Venting*
(7) NFPA 69, *Standard on Explosion Prevention Systems*
(8) *NFPA 70, National Electrical Code*
(9) *NFPA 72, National Fire Alarm and Signaling Code*
(10) NFPA 80, *Standard for Fire Doors and Other Opening Protectives*

A.10.3.2 For record retention to be useful, the minimum acceptable documentation should identify what was tested/inspected, and when and whether it performed successfully. Corrective action taken should be noted on or maintained with the inspection/testing record.

A.10.3.3 At a minimum, records should be retained until subsequent inspection or testing has superseded them. Consideration should be given to identifying and maintaining records that can serve as predictive maintenance tools. Original records, such as manufacturers' data sheets, as-built drawings, or contractor test certificates, should be retained for the life of the equipment.

A.10.3.4 Permissible media for records can include written, printed, or computer-generated documents, drawings, or photographs.

A.10.3.5 Files, inspection reports, investigations, training programs, and related documents should be maintained in compliance with the recordkeeping policies of the organization so that information can be easily retrieved.

Computer programs that file inspection and test results should provide a means of comparing current and past results and should indicate the need for corrective maintenance or further testing.

A.10.4 Employees' health and safety in operations depend on recognizing actual or potential hazards, controlling or eliminating these hazards, and training employees to work safely.

A.10.4.2(1) An important part of preventive maintenance is employee training in the proper care and use of equipment. Employees should be given instructions in selecting the proper tool for the job and the limitations of the tool. Training in operating and maintenance procedures and emergency plans should be developed. A training program appropriate to the types and quantities of hazardous materials stored or used should be conducted to prepare employees to handle hazardous materials safely on a daily basis and during emergencies. This training program should include the following:

(1) Identification of all hazardous materials present and specific hazards of these materials
(2) Instructions in safe storage and handling of hazardous materials, including maintenance of monitoring records
(3) Instructions in emergency procedures for leaks, spills, fires, or explosions, including shutdown of operations and evacuation procedures

A.10.4.3 Such persons should also be familiar with the proper use of special precautionary techniques, personal protective equipment, lockout/tagout requirements, insulating and shielding materials, and test equipment. A person can be considered qualified with respect to certain equipment and methods but still be unqualified for others.

Employees should be trained to recognize obvious defects or malfunctioning equipment within their work area. Such defects should be reported immediately.

A.10.4.5 Training should also be given to new employees when they join a company and to company employees transferring to a new department or location.

In addition to the requirements in Section 10.4, employee training should comply with the following standards, as applicable:

(1) NFPA 1, *Fire Code*
(2) NFPA 10, *Standard for Portable Fire Extinguishers*
(3) NFPA 25, *Standard for the Inspection, Testing, and Maintenance of Water-Based Fire Protection Systems*
(4) NFPA 30, *Flammable and Combustible Liquids Code*
(5) NFPA 49, *Hazardous Chemicals Data* (Incorporated into the NFPA *Fire Protection Guide on Hazardous Materials*)
(6) NFPA 55, *Compressed Gases and Cryogenic Fluids Code*
(7) NFPA 68, *Standard on Explosion Protection by Deflagration Venting*
(8) NFPA 69, *Standard on Explosion Prevention Systems*
(9) *NFPA 70, National Electrical Code*
(10) *NFPA 72, National Fire Alarm and Signaling Code*
(11) NFPA 80, *Standard for Fire Doors and Other Opening Protectives*
(12) NFPA 85, *Boiler and Combustion Systems Hazards Code*
(13) NFPA 600, *Standard on Industrial Fire Brigades*

Note that although NFPA 49 has been officially withdrawn from the *National Fire Codes*®, the information is still available in NFPA's *Fire Protection Guide to Hazardous Materials*.

A.10.5.1 Qualified contractors should have proper credentials, which include applicable American Society of Mechanical Engineers (ASME) stamps, professional licenses, and so forth.

A.10.5.4 It is suggested that annual meetings be conducted with regular contractors to review the facility's safe work practices and policies. Some points to cover include to whom the contractors would report at the facility, who at the facility can authorize hot work or fire protection impairments, smoking and nonsmoking areas, and so forth.

A.10.6.1 The policy should include the type, use, and location of appliances. The intent of this procedure is to recognize the inherent hazards associated with the use of appliances in certain locations. Any exception to this written policy should be reviewed on a case-by-case basis. All exceptions should require written approval from the facility manager.

A.10.6.2 Electrical appliances should be located only in authorized, designated locations intended to support these types of appliances. Low-hazard locations such as offices, administrative facilities, and distribution centers often allow the following appliances:

(1) Refrigerators, microwaves, ice machines, small ovens, and coffee makers, located in vending/break room areas or other areas designated by the facility manager
(2) Fans, radios, and so forth, located in employee's personal work areas as authorized by the facility manager

Copyright 2014 National Fire Protection Association (NFPA). Licensed, by agreement, for individual use and download on October 4, 2014 to LEADER and READER for designated user PATTARAPORN SRITRAKOOL. No other reproduction or transmission in any form permitted without written permission of NFPA. For inquires or to report unauthorized use, contact licensing@nfpa.org.

Where electrical appliances are authorized in areas containing stored combustible materials (e.g., copy paper, office supplies, and so forth), combustibles stored in the open should not be closer than 2 m (6 ft) to the appliance.

Care should be taken to ensure that the appliance is not left plugged in and unattended. A person should be appointed to ensure that the appliance(s) is turned off at the end of each working day except for refrigerators, ice makers, and so forth.

Some examples of locations where portable appliances should not be allowed include the following:

(1) Manufacturing, storage, fabricating, finishing, or other hazardous areas
(2) Motor control rooms, computer rooms, computer rack rooms, electrical rooms, or other equipment rooms
(3) Unoccupied buildings or intermittently occupied areas
(4) Employee's personal work area, except for small authorized appliances such as fans, radios, and so forth

Some examples of appliances that should not be authorized in any location include but are not limited to the following:

(1) Hot plates
(2) Toasters, toaster ovens, and popcorn poppers, other than used in the food service or vending area
(3) Space heaters (The use of space heaters presents an unnecessary hazard from a fire protection standpoint. The company or business management is responsible for maintaining a proper working environment.)
(4) Extension cords not provided by the company or business

A.10.6.3 Consideration of the following items can be included as part of the electrical appliance inspection:

(1) Does the appliance meet specifications as outlined in this standard, and is it used for its designated purpose?
(2) Is the appliance in an approved building location?
(3) Is the appliance clean and in good working condition?
(4) Is the appliance cord in good condition? Is the cord worn or frayed?
(5) Do the appliances' ratings exceed the circuit rating, potentially overloading the electrical protection devices?
(6) Are only authorized extension cords in use? Does each cord support no more than one appliance?
(7) Where appliances are authorized in areas with stored combustible materials, is there a door that could be closed?
(8) Are combustible materials (e.g., paper, binders, and files) stored in the open closer than 2 m (6 ft) to the appliance?

A.10.7 Management of change should be applied to more than just new construction projects. Management of change encompasses anything that could adversely impact loss potentials, including physical and human element changes, whether at the site, in the corporation, in the industry, or in the community.

It is critical that changes be evaluated early enough to easily accommodate all loss prevention objectives. Opportunities to enhance fire safety should be investigated during the management-of-change process.

A.10.7.2 Modifications to existing programs, equipment, or personnel should include review of the original design parameters to ensure that they have not been compromised.

A.10.7.2(1) Often, changes to the occupancy and process precipitate the need to change the fire protection strategy employed for that process or occupancy.

A.10.7.2(2) Changes to fire protection and alarm systems can include, but not be limited to, automatic sprinkler protection, special protection systems, water supplies, and alarm equipment.

A.10.7.2(3) Exposure changes include yard storage and changes to neighboring facilities.

A.10.8.1 The size and extent of the incident that triggers this requirement should be proportional to the hazard. For example, a spark in a protected duct with a spark detection system would likely not require an investigation unless a significant increase in sparks per unit time was noted or the spark fails to be extinguished. This incident is considered "recorded" with the spark detection system. For every hazard area, there is a de minimis level below which recording cannot be justified. It is up to the owner/operator to determine that level.

A.10.8.2 Incident reports should include the following information:

(1) Date of the incident
(2) Location of the incident and equipment/process involved
(3) Description of the incident, contributing factors, and the suspected cause
(4) Operation of automatic/manual fire protection systems and emergency response
(5) Recommendations and corrective actions taken or to be taken to prevent a reoccurrence

The incident report should be reviewed with appropriate management personnel and retained on file for future reference. The recommendations should be addressed and resolved.

A.10.9.1 Impairments can include isolating of fire pump controllers, closing of sprinkler system control valves, and isolating and disabling or disconnecting of detection and suppression systems.

A.10.9.2 The impairment procedure consists of identifying the impaired system and alerting plant personnel that the protection system is out of service.

A.10.9.3 The facility manager is responsible for ensuring that the condition causing the impairment is promptly corrected.

A.10.9.4 When the impairment notification procedure is used, it triggers followup by the relevant authorities having jurisdiction. This followup helps to ensure that impaired fire and explosion protection systems are not forgotten. When the system is closed and reopened, most companies notify their insurance company, broker, or authority having jurisdiction by telephone or other predetermined method.

A.10.11 Experience in the fire protection community has shown that hot work not performed in compliance with NFPA 51B, *Standard for Fire Prevention During Welding, Cutting, and Other Hot Work*, is a significant cause of fires and losses.

A.10.11.1 Hot work operations should not be conducted on any enclosed equipment, pipes, ductwork, bins, and so forth that can contain combustible material unless it has been confirmed that the fire hazard has been eliminated. Wetting down the interior space is highly recommended.

A.11.1.1 These materials include, but are not limited to, bark, chips, scrap lumber, wood dust, and other debris within wood processing and woodworking facilities.

A.11.1.3 The facility should implement a weekly housekeeping inspection in the facility's fire prevention and maintenance program. Cleaning schedules for production equipment and the

Copyright 2014 National Fire Protection Association (NFPA). Licensed, by agreement, for individual use and download on October 4, 2014 to LEADER and READER for designated user PATTARAPORN SRITRAKOOL. No other reproduction or transmission in any form permitted without written permission of NFPA. For inquires or to report unauthorized use, contact licensing@nfpa.org.

facility in general can be based on the findings of the housekeeping inspection. Typical cleanup routines, as a minimum, should include the following:

(1) Daily, or per shift, cleanup of personal work areas, walkways, emergency escape routes, and accessways to fire protection equipment.
(2) Weekly cleanup of floors throughout the facility, and specific cleanup in and around materials-handling equipment or production equipment (e.g., beneath lumber sorting decks, beneath or at the transfer points of belted chip or scrap conveyors, and beneath board presses). Machinery, motors, and hot surfaces should be kept clean of materials such as sawdust, oil, or grease.
(3) Weekly to semi-annual cleanup of dust collection on horizontal surfaces (e.g., ducts, hoods, interior mezzanines, or ceilings) and on structural building members, such as ledges, beams, and joists, to minimize dust accumulations. As a rule of thumb, do not exceed 3.2 mm (⅛ in.) in depth. In all cases, consideration should be given to minimizing horizontal surfaces where dust can accumulate. One method of reducing horizontal surfaces on structural building members is to install angled members (angle of repose) or shields to minimize buildup.

A.11.1.4 Examples of energized or moving equipment include, but are not limited to, transformers, switches, buses, conveyor rollers or drums, motors, mechanical drive equipment, steam lines, heated air transfer ducts, and thermal oil lines.

A.11.1.7 It is always preferable and inherently safer to prevent the escape of dust through the provision of a properly designed, operated, and maintained dust collection system than it is to clean up dust that has escaped due to leaks and other deficiencies of the dust collection system.

A.11.1.9 Temporary control measures for leaks include drip pans or approved absorptive materials. These measures should not be used as an alternative to regular preventive maintenance. Consideration should be given to the use of fire-resistant hydraulic fluids to reduce the fire hazards of hydraulic systems in plant process equipment.

A.11.2.1.1 Sweeping and/or vacuuming are the preferred methods to be utilized. Blowing down with steam or compressed air, or even vigorous sweeping, produces dust clouds. Facilities should not be operating during blowdown. Blowdown should be done in individual sections of the building, starting near the center and working out, in order to prevent filling the entire building with dust-laden air. Blowdown should be frequent enough that large amounts of dust are not blown into suspension. In some cases, the use of spark-resistant tools might be advisable.

A.11.2.1.2 Unapproved portable vacuum cleaning equipment can be used if the powered suction source is located in a remote, unclassified area.

Annex B Explosion Protection

This annex is not a part of the requirements of this NFPA document but is included for informational purposes only. This annex is extracted from Annex B of NFPA 654, *Standard for the Prevention of Fire and Dust Explosions from the Manufacturing, Processing, and Handling of Combustible Particulate Solids, 2006 edition.*

B.1 General. This annex covers the following common methods of explosion protection:

(1) Containment
(2) Inerting
(3) Deflagration venting
(4) Deflagration suppression
(5) Deflagration isolation

B.2 Containment. The basis for the containment method of protection is a process designed to withstand the maximum deflagration pressure of the material being handled. The equipment is designed in accordance with ASME *Boiler and Pressure Vessel Code*, Section VIII, Division 1. The final deformation pressure depends on the maximum initial pressure in the vessel prior to the deflagration. NFPA 69, *Standard on Explosion Prevention Systems*, limits the maximum initial gauge pressure to 30 psi (207 kPa) for containment vessels.

The equipment is designed either to prevent permanent deformation (working below its yield strength) or to prevent rupture with some permanent deformation allowable (working above its yield strength but below its ultimate strength). The shape of the vessel should be considered. To maximize the strength of the vessel, its design should avoid flat surfaces and rectangular shapes. The strength of welds and other fastenings should also be considered.

The major advantage of containment is that it requires little maintenance due to its passive approach to explosion protection.

The disadvantages of containment are as follows:

(1) High initial cost
(2) Weight loading on plant structure

B.3 Inerting. Inerting protection is provided by lowering the oxygen concentration, in an enclosed volume, below the level required for combustion. That is achieved by introducing an inert gas such as nitrogen or carbon dioxide. Flue gases can be used, but they could first require cleaning and cooling. *(See* NFPA 69, *Standard on Explosion Prevention Systems.)*

The purge gas flow and oxygen concentration in the process should be designed reliably with appropriate safety factors in accordance with NFPA 69, *Standard on Explosion Prevention Systems*. Consideration should be given to the potential for asphyxiation of personnel due to purge gas or leakage.

The major advantage of inerting is prevention of combustion, thereby avoiding product loss.

The disadvantages of inerting are as follows:

(1) Ongoing cost of inert gas
(2) Possible asphyxiation hazard to personnel
(3) High maintenance

B.4 Deflagration Venting. Deflagration venting provides a panel or door (vent closure) to relieve the expanding hot gases of a deflagration from a process component or room.

B.4.1 How Deflagration Venting Works. Except for an open vent, which allows flammable gases to discharge directly to the atmosphere, deflagration vents open at a predetermined pressure referred to as P_{stat}. The vent is either a vent panel or a vent door. The pressurized gases are discharged to the atmosphere either directly or via a vent duct, resulting in a reduced deflagration pressure, P_{red}. The deflagration vent arrangement is designed to ensure that pressure, P_{red}, is below the rupture pressure of the process vessel or room. This process is illustrated in Figure B.4.1.

Copyright 2014 National Fire Protection Association (NFPA). Licensed, by agreement, for individual use and download on October 4, 2014 to LEADER and READER for designated user PATTARAPORN SRITRAKOOL. No other reproduction or transmission in any form permitted without written permission of NFPA. For inquires or to report unauthorized use, contact licensing@nfpa.org.

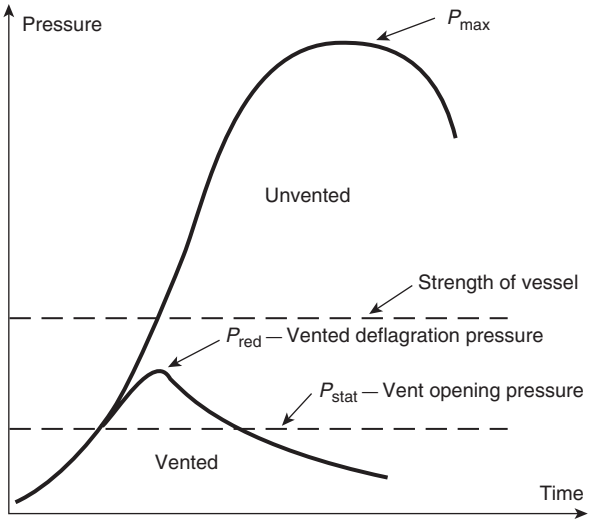

FIGURE B.4.1 Pressure–Time Graph of a Vented Deflagration.

B.4.2 Deflagration Vent Panel. The deflagration vent panel is a flat or slightly domed panel that is bolted or otherwise attached to an opening on the process component to be protected. The panel can be made of any material and construction that allows the panel to either rupture, detach, or swing open from the protected volume; materials that could fragment and act as shrapnel should not be used. Flat vents could require a vacuum support arrangement or a support against high winds. Domed vents are designed to have a greater resistance against wind pressure, process cycles, and process vacuums. A typical commercially available vent panel is detailed in Figure B.4.2. Such vents are either rectangular or circular.

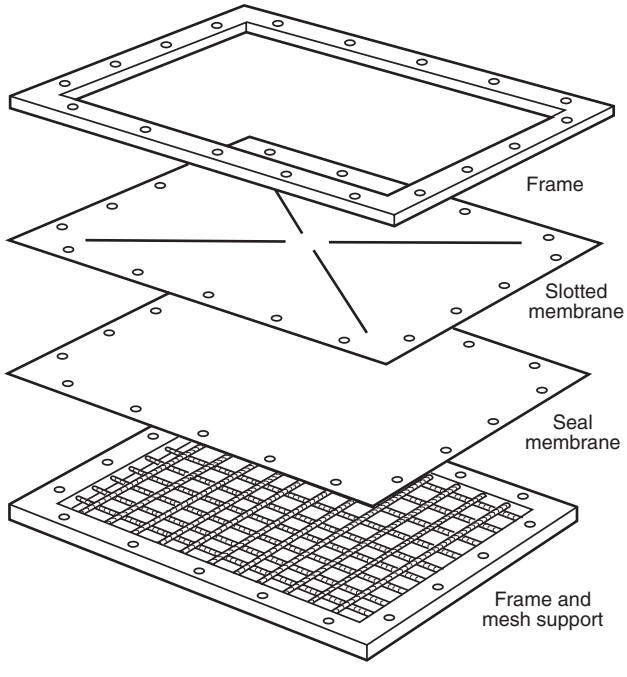

FIGURE B.4.2 Deflagration Vent Panel and Support Grid.

B.4.3 Deflagration Vent Door. A deflagration vent door is a hinged door mounted on the process component to be protected. It is designed to open at a predetermined pressure that is governed by a special latch arrangement. Generally, a vent door has a greater inertia than a vent panel, reducing its efficiency.

B.4.4 Applications. Deflagration vents are used for applications that handle gases, dusts, or hybrid mixtures. Typical applications include dust collectors, silos, spray dryers, bucket elevators, and mixers. Figure B.4.4 shows a typical vent panel installation on a dust collector.

The advantages of deflagration venting are as follows:

(1) Low cost, if the process component is located outside
(2) Low maintenance due to use of passive device

The disadvantages of deflagration venting are as follows:

(1) The potential for a postventing fire within the component, particularly if combustible materials, such as filter bags, are still present
(2) The recommendation that the plant component be near an outside wall or located outside
(3) Fireball exiting a vented component, which is a severe fire hazard to the plant and personnel located in the vicinity of the deflagration vent opening
(4) Contraindication of the process for toxic or corrosive material

B.4.5 Design Considerations. The following points should be considered in the design and evaluation of the suitability of deflagration venting:

(1) Reaction forces
(2) Postexplosion fires
(3) Material toxicity or corrosiveness
(4) Good manufacturing practices (GMP) (food and pharmaceutical applications)
(5) Vent efficiency
(6) Connections to other process equipment
(7) Vent duct backpressure

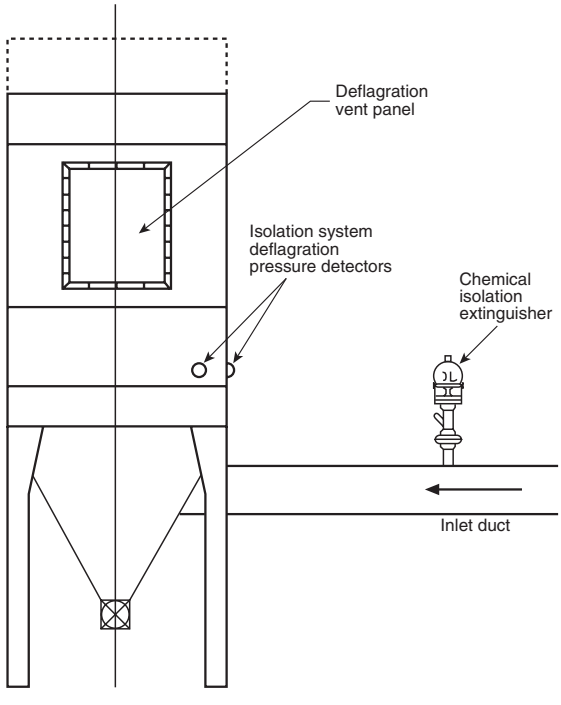

FIGURE B.4.4 Vented Dust Collector.

Copyright 2014 National Fire Protection Association (NFPA). Licensed, by agreement, for individual use and download on October 4, 2014 to LEADER and READER for designated user PATTARAPORN SRITRAKOOL. No other reproduction or transmission in any form permitted without written permission of NFPA. For inquires or to report unauthorized use, contact licensing@nfpa.org.

(8) Thermal insulation
(9) Safe venting area
(10) Vacuum protection
(11) Location

B.5 Deflagration Suppression. Deflagration suppression involves a high-speed flame-extinguishing system that detects and extinguishes a deflagration before destructive pressures are created.

B.5.1 How Deflagration Suppression Works. An explosion is not an instantaneous event. The growing fireball has a measurable time to create its destructive pressures. Typically the fireball expands at speeds of 30 ft/sec (9 m/sec), whereas the pressure wave ahead of it travels at 1100 ft/sec (335 m/sec). The deflagration is detected either by a pressure detector or a flame detector, and a signal passes to a control unit, which actuates one or several high-rate discharge extinguishers. The extinguishers are mounted directly on the process to be protected, rapidly suppressing the fireball. The whole process takes milliseconds. The sequence for deflagration suppression is shown in Figure B.5.1(a).

Because the fireball is suppressed at an early stage, rupture of the vessel is prevented. Figure B.5.1(b) shows the pressure–time graph of the suppression of a starch deflagration in a 67 ft^3 (1.9 m^3) vessel. Note that the reduced deflagration gauge pressure is approximately 3.5 psi (24 kPa) in this test.

B.5.2 Applications. Deflagration suppression systems are used for applications that handle gases, dusts, or hybrid mixtures. Typical applications include dust collectors, silos, spray dryers, bucket elevators, and mixers. Figure B.5.2 shows a typical suppression system installation on a dust collector.

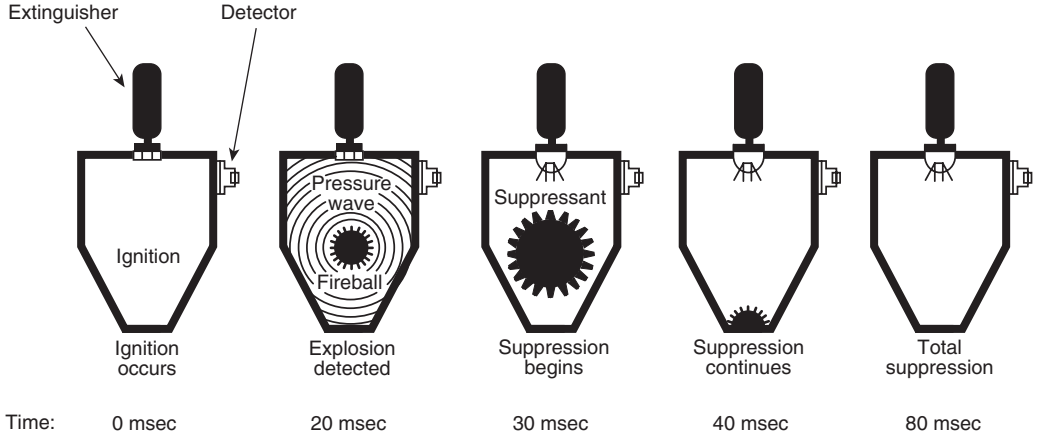

FIGURE B.5.1(a) Deflagration Suppression Sequence of Starch in a 35 ft^3 (1 m^3) Vessel.

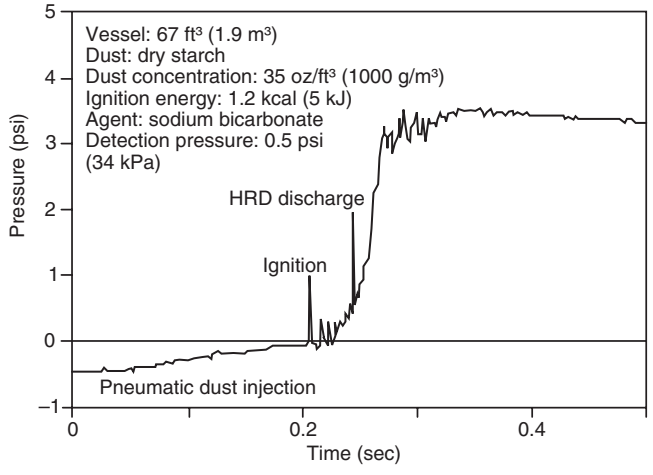

Note: Pressures are gauge pressures.

FIGURE B.5.1(b) Pressure Versus Time in a Suppressed Deflagration.

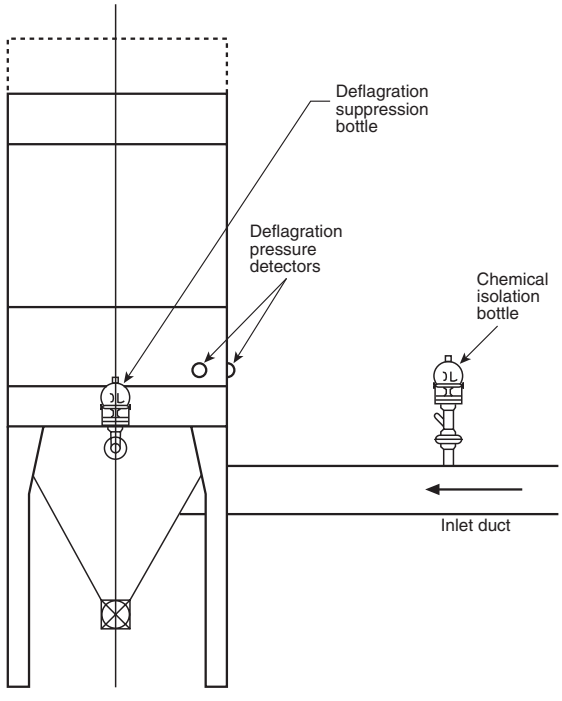

FIGURE B.5.2 Dust Collector Suppression System.

Copyright 2014 National Fire Protection Association (NFPA). Licensed, by agreement, for individual use and download on October 4, 2014 to LEADER and READER for designated user PATTARAPORN SRITRAKOOL. No other reproduction or transmission in any form permitted without written permission of NFPA. For inquires or to report unauthorized use, contact licensing@nfpa.org.

The advantages of a deflagration suppression system are as follows:

(1) Elimination of flame and reduced chance of subsequent fire
(2) Reduced risk of ejected toxic or corrosive material
(3) Flexibility in process component locations

The disadvantages of a deflagration suppression system are as follows:

(1) Generally higher cost than for deflagration venting
(2) Requirement for regular maintenance
(3) Ineffectiveness for certain metal dusts, acetylene, and hydrogen

B.5.3 Design Criteria. Deflagration suppression systems are designed in accordance with NFPA 69, *Standard on Explosion Prevention Systems*, and ISO 6184-4, *Explosion Protection Systems — Part 4: Determination of Efficiency of Explosion Suppression Systems*. The following information is required for design of a suppression system:

(1) Process material
(2) K_{St} or K_G value in psi-ft/sec (bar-m/sec)
(3) Vessel strength
(4) Vessel dimensions and volume
(5) Maximum and minimum operating pressures and temperatures
(6) Connections to other process equipment

B.6 Deflagration Isolation. A process component such as a dust collector or silo could be protected from an explosion by venting, suppression, or containment. However, its connections to other process components by pipes and ducts pose the threat of deflagration propagation. A deflagration vent on a dust collector could save it from destruction, but the inlet duct could still propagate flame to other parts of the plant. Such propagation can result in devastating secondary explosions. The importance of ducts is stated in NFPA 68, *Standard on Explosion Protection by Deflagration Venting*, which says:

> Interconnections between separate pieces of equipment present a special hazard.…Where such interconnections are necessary, deflagration isolation devices should be considered, or the interconnections should be vented. [**68:**5.6.7]

Although NFPA 68, *Standard on Explosion Protection by Deflagration Venting*, indicates venting as an option for interconnections, venting is valid only when interconnected equipment is protected from explosions.

The need for isolation is further supported by research that shows that interconnecting vessels can result in precompression of gases in connected vessels caused by a deflagration. The result is that a deflagration in one vessel can produce considerably higher pressures in the connected vessel. Mechanical or chemical isolation methods should therefore be considered where interconnections between vessels are present.

B.6.1 Mechanical Isolation. Mechanical deflagration isolation can be provided by rotary airlock valves of suitable construction. An example of their use is at the discharge of dust collector hoppers. To be effective and to prevent the transmission of flame and burning materials, rotary airlock valves should be stopped at the moment a deflagration is detected. To be truly effective, rotary airlock valves should be integrated into an explosion detection/protection system for the piece of equipment being protected.

Rotary airlock valves for deflagration isolation should be of rugged construction and suitable design. Such design is particularly important for pieces of equipment protected by deflagration venting and containment. This application puts more demand on the integrity of rotary airlock valves than on the components protected by suppression. The reason is that suppression extinguishes the flame in addition to mitigating the pressure.

Another example of mechanical isolation is the high-speed knife gate valve. High-speed gate valves should be capable of withstanding the maximum deflagration pressure. Typically, valves are rated for gauge pressures up to 150 psi (1035 kPa) and should be capable of closing in milliseconds. The pipework also needs to withstand the maximum deflagration pressure, P_{max}. Figure B.6.1 shows a typical arrangement for a high-speed gate valve. A detector, which could be a pressure switch or an optical detector, detects the deflagration pressure or flame front. The trigger then initiates the rapid valve closure to prevent the propagation of flame and pressure. If the connected piece of equipment is protected by deflagration venting or deflagration suppression, then little pressure can be expected. In such cases, the valve that isolates a connected pipe can be replaced by a chemical isolation barrier.

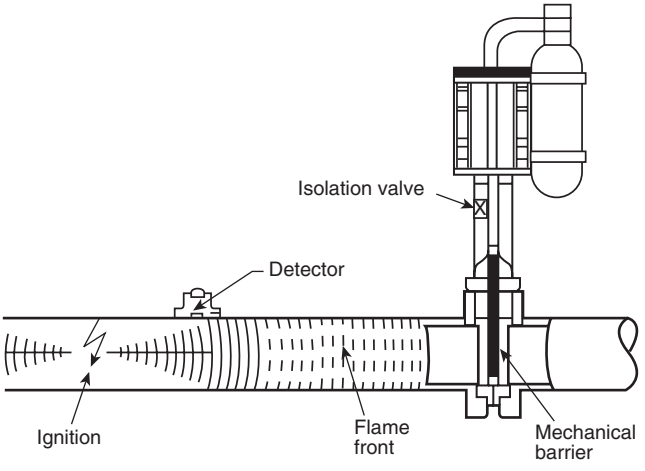

FIGURE B.6.1 Mechanical Isolation Using a High-Speed Gate Valve.

B.6.2 Chemical Isolation. Chemical isolation is achieved by the rapid discharge of a chemical extinguishing agent into the interconnecting pipe or duct. Figure B.6.2 shows a typical arrangement for chemical isolation. A deflagration detector, which could be a pressure switch or an optical detector, detects the deflagration pressure or flame front. The trigger then initiates the rapid discharge of extinguishing agent from a high-speed extinguisher bottle, thus preventing the propagation of flame and burning materials.

Chemical deflagration isolation should not be confused with ignition source (spark) suppression systems. Such systems are intended to detect burning particles traveling down a duct and extinguish them with a downstream spray of water. They are not designed to stop deflagrations once they have started and are ineffective for preventing deflagration propagation through interconnected equipment.

Copyright 2014 National Fire Protection Association (NFPA). Licensed, by agreement, for individual use and download on October 4, 2014 to LEADER and READER for designated user PATTARAPORN SRITRAKOOL. No other reproduction or transmission in any form permitted without written permission of NFPA. For inquires or to report unauthorized use, contact licensing@nfpa.org.

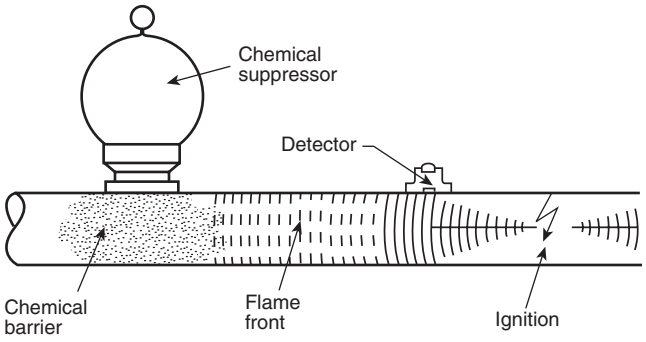

FIGURE B.6.2 Typical Arrangement of Chemical Isolation.

B.7 Limitations of Flame Front Diverters. Flame front diverters can divert deflagration flames by directing them to the atmosphere. However, these devices do have limitations. If the air-moving device is located downstream of the flame front diverter, an explosion originating upstream of the diverter can propagate past it because of the deflagration flames being sucked into the downstream side, despite the open diverter cover. Also, tests suggest that some diverters could be ineffective in completely diverting a deflagration involving a hybrid mixture whose vapors exceed the LFL, regardless of the location of the air-moving device. Nevertheless, in both situations where a flame front diverter allows propagation, the deflagration severity in the system is expected to be reduced.

Annex C Informational Primer on Spark Detection and Extinguishing Systems

This annex is not a part of the requirements of this NFPA document but is included for informational purposes only. This annex is extracted from Annex C of NFPA 654, *Standard for the Prevention of Fire and Dust Explosions from the Manufacturing, Processing, and Handling of Combustible Particulate Solids, 2006 edition.*

C.1 Primer Design Concepts for Spark Detection and Extinguishing Systems.

C.1.1 Spark/Ember Detectors. Spark/ember detectors are radiant energy–sensing fire detectors. The design, installation, and maintenance of radiant energy–sensing fire detectors are covered in Chapter 5 of *NFPA 72, National Fire Alarm Code.* Where required by NFPA 654, spark detectors are used to actuate an abort gate to divert fuel, flames, and combustion gases to a safe location.

However, spark detectors are more commonly integrated into a spark detection and extinguishing system. In this second case, the extinguishment is usually an intermittent water spray designed and installed pursuant to NFPA 15, *Standard for Water Spray Fixed Systems for Fire Protection*, and maintained pursuant to NFPA 25, *Standard for the Inspection, Testing, and Maintenance of Water-Based Fire Protection Systems.* Because the overwhelming majority of the applications that employ spark/ember detectors are pneumatic conveying systems, it is appropriate to provide a primer on these devices as part of this standard.

C.1.1.1 Actuation of Abort Gate. When spark detectors are used to actuate an abort gate, the design concepts are fairly straightforward. The detectors are mounted on the duct upstream from the abort gate and are wired to a control panel listed and approved for that purpose. When a detector senses a spark, the signal causes the control panel to alarm, and the solenoid or other releasing device on the abort gate is energized. This type of system is shown in Figure C.1.1.1.

C.1.1.2 Spark Detection and Extinguishing Systems. Spark detection and extinguishing systems usually consist of a group of detectors that are located on the conveying duct, a control panel in a safe accessible location, and an extinguishment solenoid valve and nozzle set located on the duct downstream from the detectors. Such a system is shown in Figure C.1.1.2.

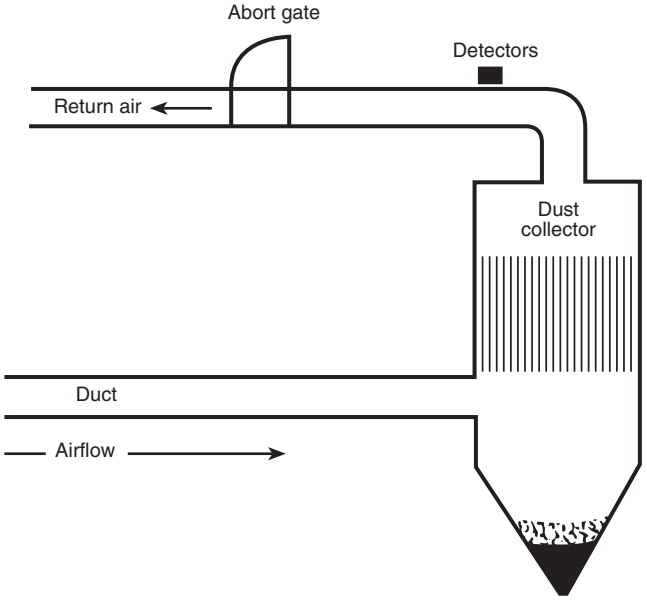

FIGURE C.1.1.1 Spark Detectors and Abort Gate.

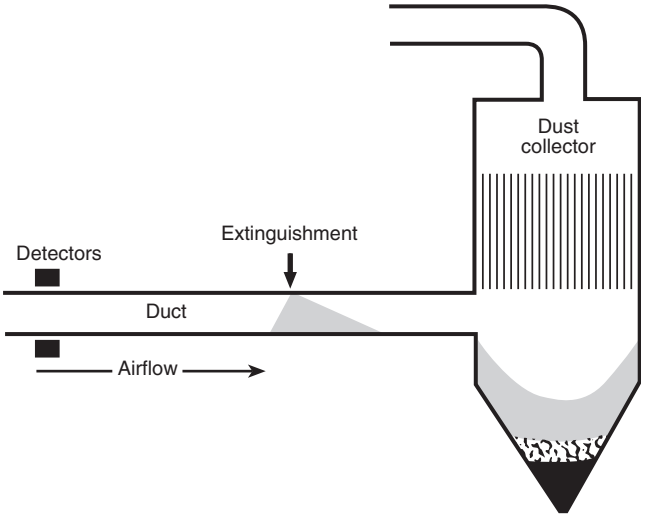

FIGURE C.1.1.2 Typical Spark Detection and Extinguishing System.

Copyright 2014 National Fire Protection Association (NFPA). Licensed, by agreement, for individual use and download on October 4, 2014 to LEADER and READER for designated user PATTARAPORN SRITRAKOOL. No other reproduction or transmission in any form permitted without written permission of NFPA. For inquires or to report unauthorized use, contact licensing@nfpa.org.

When a spark or ember enters the detector(s), the detector responds with an alarm signal that actuates the extinguishing system valve, establishing an extinguishing concentration of water before the spark arrives. The water spray is maintained for a time period long enough to ensure extinguishment and is then turned off. This feature minimizes the quantity of water injected into the duct. The pneumatic conveying system is not shut down; it continues to run. Each time a spark comes down the duct, it is quenched.

C.1.2 Critical Design Concepts. For both system design concepts, several critical factors should be addressed if they are to work. First, the detector should be able to reliably detect a spark, an ember, or a flame. Second, the alarm signal should be processed quickly. The timing should be predictable enough to allow the abort gate to operate or to allow the extinguishing system sufficient time to establish the water spray. Finally, in the case of the extinguishing system, there should be a provision to reapply the water spray extinguishment repetitively. The occurrence of an individual, isolated spark is rare; usually sparks are produced in a burst or stream. The extinguishing system should be able to reactivate as each successive spark is detected. Unless all these concerns are addressed, spark/ember detection and extinguishment cannot be used as usually supplied.

C.1.2.1 Spark Detector Reliability. The first concern regarding a spark/ember detector is its ability to detect a spark, ember, or fire. *NFPA 72, National Fire Alarm Code*, defines a spark as "a moving ember" and defines an ember as "a particle of solid material that emits radiant energy due either to its temperature or the process of combustion on its surface." Figure C.1.2.1 shows the radiation intensity as a function of wavelength for an oak ember and a gasoline flame.

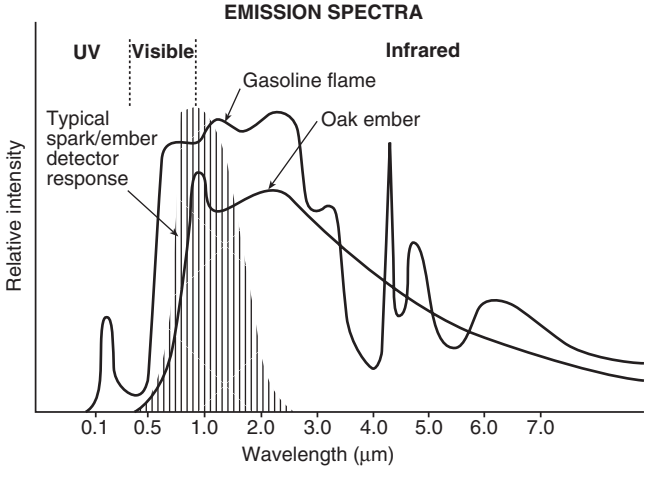

FIGURE C.1.2.1 Emissions of an Oak Ember and Gasoline Flame Compared to the Spectral Sensitivity of a Spark/Ember Detector.

The spectral sensitivity of the typical spark/ember detector is superimposed on the graph in Figure C.1.2.1. One can see that the spark/ember detector will sense the radiation from both an ember (spark) and a flame.

C.1.2.2 Detector Sensitivity and Speed. The second concern regarding the detectability of a spark or flame in a duct is the sensitivity and speed of the detector. Because the detector is designed to be mounted on a duct that is dark, silicon photodiode sensors can be used, and there will be few, if any, sources of spurious alarm within the duct. The sensors allow the detectors to be made both extremely sensitive and extremely fast. Sensitivities of 1.0 μW and speeds of 100 microseconds are common. The result is a detector that can detect a spark the size of a pinhead moving faster than the speed of sound. The outcome is that both sparks and flames are easily detected in pneumatic conveying systems with modern spark/ember detectors.

CAUTION: Spark/ember detectors are motion sensitive. If the fire is moving too slowly, the typical spark/ember detector might not detect it. In general, spark/ember detectors do not detect a stationary ember or flame.

Another consideration is the absolute necessity for a predictable amount of time between the detection of the spark and the actuation of the abort gate or the establishment of the water spray extinguishing concentration. The response times of the detector, control panel, and solenoid valve are known, verified, and extremely reliable. However, unless the arrival time of the spark at the abort gate or extinguishing water spray is equally predictable, these systems are not appropriate.

The arrival time of the spark is a function of the conveying system air speed and the distance between the detector and the extinguishing system. Most spark detection and extinguishing systems provide designers a formula to compute the required distance between the detectors and the abort gate or extinguishment. Generally, it is in the following form:

$$\begin{pmatrix}\text{Air}\\ \text{speed}\end{pmatrix}\times\begin{pmatrix}\text{System}\\ \text{factor}\end{pmatrix}=\begin{matrix}\text{Distance between detectors}\\ \text{and extinguishment}\end{matrix}$$

The air speed and hence the ember speed should be both constant and controlled. It is this necessity that established the requirement that the combustible concentration be less than one-half the LFL or MEC. If the combustible concentration exceeds the LFL or MEC, a deflagration can result from the introduction of a spark. The speed of the flame front equals the sum of the flame front velocity for that combustible at that concentration plus the nominal air velocity of the conveying system. The deflagration flame front would pass the abort gate before it had opened or would pass the extinguishment before the valve had opened and established a spray pattern. That is why the criteria regarding combustible concentration are so important. A spark detection system on a conveying line where the concentrations are above the LFL or MEC cannot be expected to make a meaningful contribution to the survival of the site or its occupants should a deflagration occur.

C.1.2.3 Control Panel Design. The third concern regarding these systems involves the extinguishing component. Because the cause of the first spark usually causes additional sparks, the control panel should be designed for the successive and repetitive reapplication of the extinguishing agent. This type of function is not found in the average fire alarm control panel. Specially designed control panels for spark detection and extinguishment are the norm.

C.2 System Basics.

C.2.1 General. This standard requires the use of spark detection systems in those installations in which conveying air is being returned to the building. It requires that the spark detection be

Copyright 2014 National Fire Protection Association (NFPA). Licensed, by agreement, for individual use and download on October 4, 2014 to LEADER and READER for designated user PATTARAPORN SRITRAKOOL. No other reproduction or transmission in any form permitted without written permission of NFPA. For inquires or to report unauthorized use, contact licensing@nfpa.org.

used to activate an abort gate, diverting the airstream to outside ambient air. This requirement is a critical life safety and property conservation measure. Sparks entering a dust collector are apt to initiate a deflagration. If the abort gate is not activated, the flames and combustion gases would be conveyed back into the facility, igniting secondary fires and posing a serious threat to the occupants. Figure C.2.1 is a diagram of this type of system.

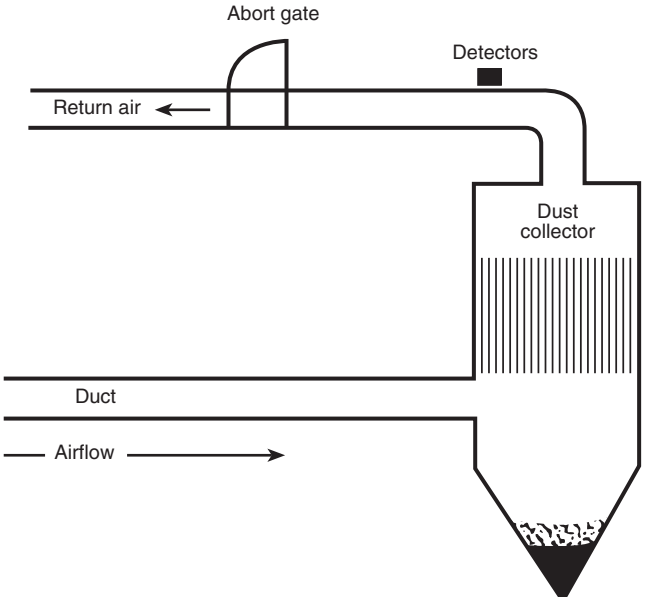

FIGURE C.2.1 Minimum Compliance Spark Detection System.

C.2.2 Dual Detectors. Because spark detectors have limited fields of view, most systems require two detectors to cover a round duct. The detectors are usually situated on the inlet to the collector, as shown in Figure C.2.1. This system is the only type of spark detection system required by this standard. However, because it is a minimum compliance standard, additional measures are allowed.

C.2.3 Limitations of Minimum Compliance Approach. The problem with the minimum compliance approach is that it can often reduce the productivity of the site. When a spark is detected, the abort gate transfers. The air-handling system then should be shut down to restore the abort gate to the normal position. This shutdown could require an hour of production time. If a spark is a rare occurrence, this is not a serious problem. However, in many systems, sparks are a common occurrence. For example, in a woodworking facility, one could expect several sparks per day. Obviously, a system that shuts down the facility for an hour several times a day is not a viable system.

C.2.4 Approach to Minimize Shutdowns. The use of a spark detection and extinguishing system on the inlet to the dust collector is an extremely effective way of preventing production stoppages. This type of system mounts a second zone of spark detectors on the pneumatic conveying duct far enough upstream to allow the installation of an intermittent water spray extinguishing system on the inlet duct prior to entry into the primary dust collector (air–material separator). This spark detection and extinguishing system quenches each spark as it comes down the duct, before it reaches the air–material separator. A properly designed and installed spark detection and extinguishing system is very effective in preventing ignitions in the air–material separator. The spark detector that actuates the abort gate is moved to the outlet of the air–material separator, providing a secondary detection. This type of system is shown in Figure C.2.4.

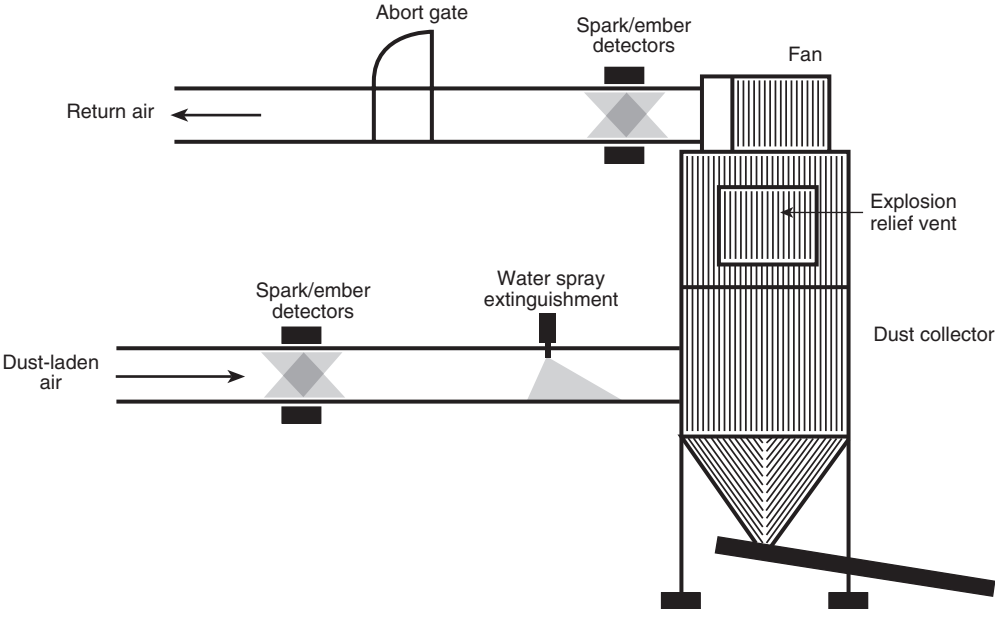

FIGURE C.2.4 Basic Spark Detection and Extinguishing System for a Single Air–Material Separator.

Copyright 2014 National Fire Protection Association (NFPA). Licensed, by agreement, for individual use and download on October 4, 2014 to LEADER and READER for designated user PATTARAPORN SRITRAKOOL. No other reproduction or transmission in any form permitted without written permission of NFPA. For inquires or to report unauthorized use, contact licensing@nfpa.org.

C.2.5 Additional System Features. The spark detection and extinguishing system involves more than just detectors and a water spray. To provide the degree of performance necessitated by the application, the system should require a number of additional system attributes.

First, the detectors should be listed and approved to operate in conjunction with the control panel and the water spray extinguishing unit. All three components should be listed as a system. The nozzles that are used are specifically designed for this type of service; they are not off-the-shelf sprinkler heads. The solenoid valve is specifically matched to the control panel to ensure a uniform, predictable response time.

The operating requirements of a spark detection and extinguishing system call for additional features. The windows or lenses of detectors can become scratched, broken, or coated with material, reducing their sensitivity. Consequently, a means should be provided to measure the sensitivity of the detectors to ensure that they are capable of detecting sparks after the initial installation tests. The sensitivity measurement capability is required by *NFPA 72, National Fire Alarm Code*. If the material is discovered to cling to the interior surfaces of the duct, a means to keep the detector window/lens clean is required by *NFPA 72*. This usually involves an air-purging option that bathes the detector window/lens with clean air.

To work reliably, the extinguishing system should have a strainer (required by NFPA 15, *Standard for Water Spray Fixed Systems for Fire Protection*) to prevent pipe scale from clogging the nozzle. The water supply should be reliable and supervised with a pressure switch. Because the extinguishing system components are mounted on a duct that could be outdoors, freeze prevention measures should be implemented. Antifreeze solutions are not a viable option on extinguishing systems that are expected to operate regularly. Consequently, heat tracing should be thought of as a mandatory constituent of the system along with thermostats to turn the heat trace on and to warn of impending freeze-up.

Finally, desirable system components such as system testing, event recording, and flow indicators should be considered as part of any system.

Annex D Conveying System Isolation

This annex is not a part of the requirements of this NFPA document but is included for informational purposes only.

D.1 Critical equipment includes equipment of high value, high fire/explosion hazard, high production dependence, or high exposure to operating personnel or the public at large.

For example, a sander dust collection system has a relatively high frequency of sparks, fires, and explosions. Isolation goals in this case could be as follows:

(1) Prevent explosions from propagating back into the production building through the pneumatic conveying duct using a backblast damper
(2) Prevent burning collected material from being conveyed to storage silos using spark detection and a fire dump screw arrangement with steel-tipped rotary airlocks
(3) Minimize the chance of conveying burning material into a bag filter dust collector using a high-speed abort gate

One popular arrangement using this isolation philosophy that has proven to be very effective in reducing fires and explosions uses a fan pulling through a cyclone (to remove the majority of material) and blowing into a dust filter. Figure D.1(a) and Figure D.1(b) show a typical interlock logic and arrangement, respectively, with the previously listed isolation features, plus other fire protection features (e.g., spark extinguishing and dust collector water spray) and explosion venting to protect against the fire and deflagration risks.

The following three-zone spark detection interlocking and control scheme maximizes process uptime and minimizes equipment damage. All interlock functions for a specified detection zone operate simultaneously. The three zones are as follows:

(1) *Zone 1* (primary protection)
  (a) Activate spark extinguishing nozzles for several seconds.
  (b) No process shutdown.
(2) *Zone 2* (backup to the primary protection in case it fails)
  (a) Activate high-speed abort gate, but leave conveying fan running. (This action will divert burning material away from bag filter and clear the duct of burning material.)
  (b) Stop wood material feed into dust-producing equipment, and shut down equipment. (This action will eliminate the likely source of ignition and prevent additional wood dust from being produced.)
  (c) Activate cyclone fire suppression system. (This action will minimize thermal damage to the cyclone and begin extinguishment of burning material.)
  (d) Activate cyclone material isolation system. (In this example, this action would stop the normal outfeed rotary feeder, reverse the fire dump screw under cyclone, and start the fire dump rotary feeder. This action will prevent the fire from spreading to downstream process equipment and empty burning material and fire suppression water from the cyclone.)
(3) *Zone 3* (fail-safe protection for bag filter)
  (a) Activate all the interlocks associated with Zone 2 for added reliability.
  (b) Activate fire suppression system in bag filter. (This action will minimize thermal damage to the bag filter and begin extinguishment of any burning material in the filter.)
  (c) Activate bag filter isolation system. (In this example, the material collected in the bag filter is put back into the cyclone, so the cyclone material isolation system also keeps any burning material from the bag filter from reaching downstream equipment.)

To further illustrate isolation of critical equipment, assume that the collected material dropped into a high-pressure blowline instead of a fire dump screw, and the material could be relayed to a silo or diverted to a small clam-shell truck dump bin for disposal. The silo would normally be considered critical equipment needing isolation (typically done with a high-speed abort gate), but the truck dump bin would not normally need isolation because it has lower value, is of low production importance, and can be quickly emptied by dropping the contents on the ground for fire fighting.

As another example, a particleboard direct-fired rotary dryer represents a high frequency of ignition sources and conveys dried material to a screening operation (process equipment with high production impact and high explosion risk). An isolation goal in this case could be to prevent conveying burning material into the downstream process equipment, using spark detection to stop steel-tipped rotary feeders and stop or reverse conveyors. Figure D.1(c) and Figure D.1(d) show a typical interlock logic and arrangement along with other fire protection (spark extinguishing and collector water spray) and deflagration protection (explosion vents).

Copyright 2014 National Fire Protection Association (NFPA). Licensed, by agreement, for individual use and download on October 4, 2014 to LEADER and READER for designated user PATTARAPORN SRITRAKOOL. No other reproduction or transmission in any form permitted without written permission of NFPA. For inquires or to report unauthorized use, contact licensing@nfpa.org.

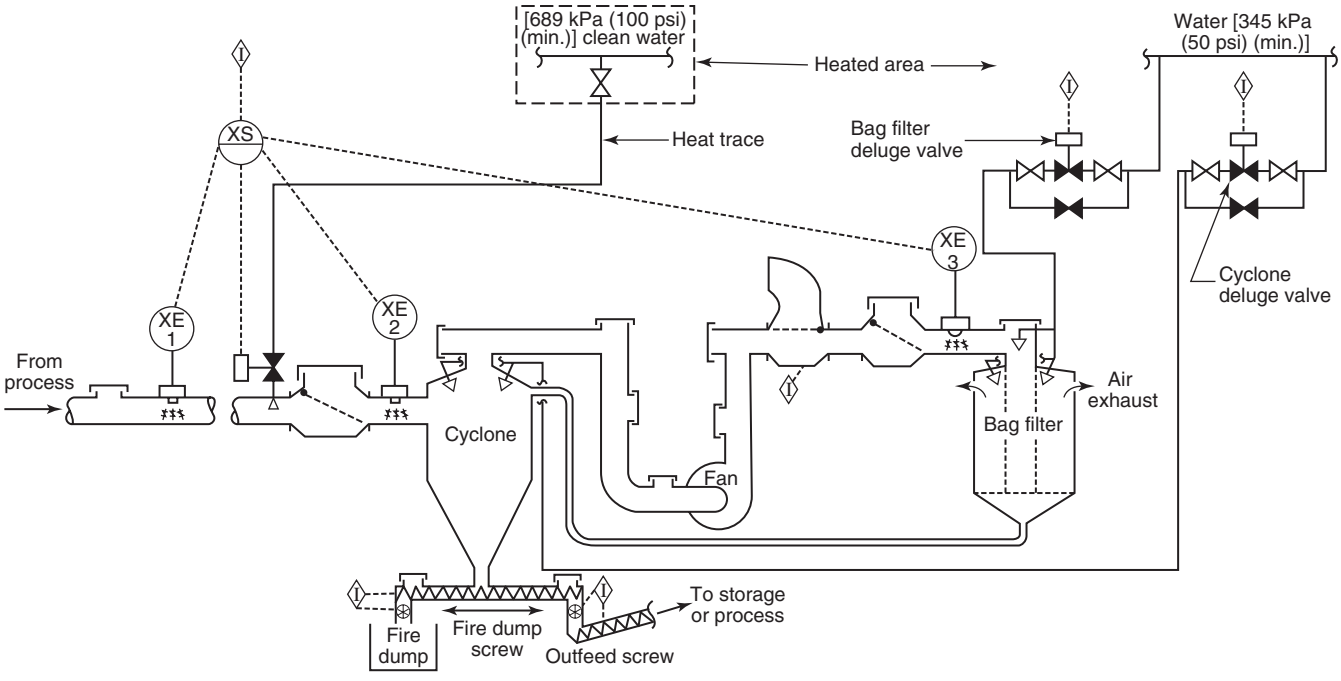

Symbol	Description	Location	Comments
XS	Controller, infrared radiation detection/ suppression system	Process control room	Part of a listed spark extinguishing system.
XE 1	Infrared radiation (spark) detector	Duct between process and cyclone	Same as XS.
XE 2	Infrared radiation (spark) detector	Cyclone inlet	Same as XS.
XE 3	Infrared radiation (spark) detector	Bag filter inlet	Same as XS.
	Nozzle, water fog	Duct between process and cyclone	Same as XS.

Symbol	Description	Location	Comments
	Nozzle, water spray	Cyclone, bag filter	
	Explosion vent	Conveying duct, bag filter body, fire dump screw	Venting must be tailored to each installation.
	Backblast damper	Bag filter inlet, cyclone inlet	
I	System interlock	Numerous	See interlock logic diagram on Figure D.1(b).
	Abort damper	Duct at bag filter inlet	

FIGURE D.1(a) Typical Interlock Logic for Conveying System. *(© 2000 Factory Mutual Insurance Company. Reprinted with permission. All rights reserved. Source: Property Loss Prevention Data Sheet 7-73, "Dust Collectors and Collection Systems.")*

Copyright 2014 National Fire Protection Association (NFPA). Licensed, by agreement, for individual use and download on October 4, 2014 to LEADER and READER for designated user PATTARAPORN SRITRAKOOL. No other reproduction or transmission in any form permitted without written permission of NFPA. For inquires or to report unauthorized use, contact licensing@nfpa.org.

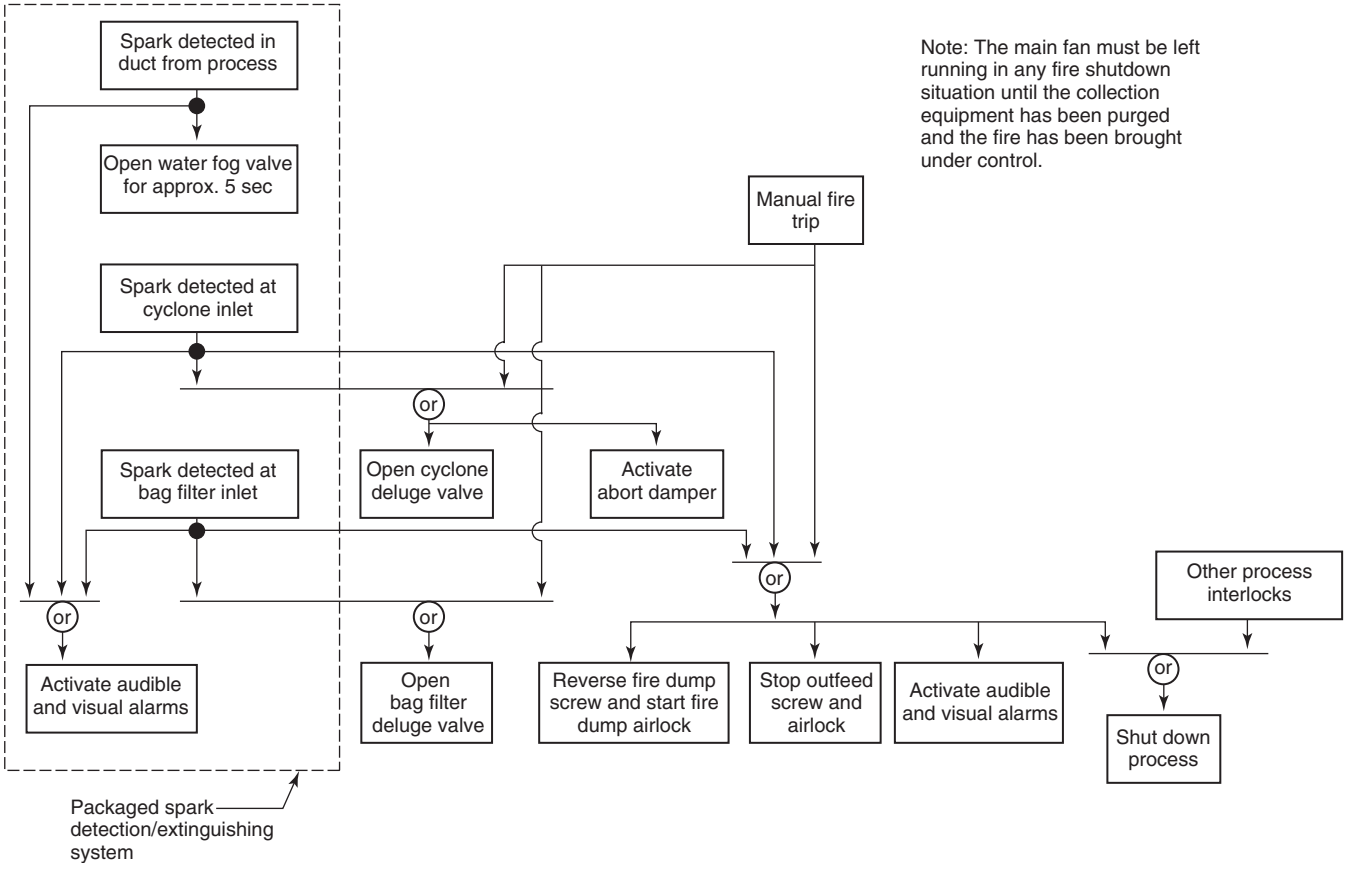

FIGURE D.1(b) Typical Arrangement of Conveying System. *(© 2000 Factory Mutual Insurance Company. Reprinted with permission. All rights reserved. Source: Property Loss Prevention Data Sheet 7-73, "Dust Collectors and Collection Systems.")*

Copyright 2014 National Fire Protection Association (NFPA). Licensed, by agreement, for individual use and download on October 4, 2014 to LEADER and READER for designated user PATTARAPORN SRITRAKOOL. No other reproduction or transmission in any form permitted without written permission of NFPA. For inquires or to report unauthorized use, contact licensing@nfpa.org.

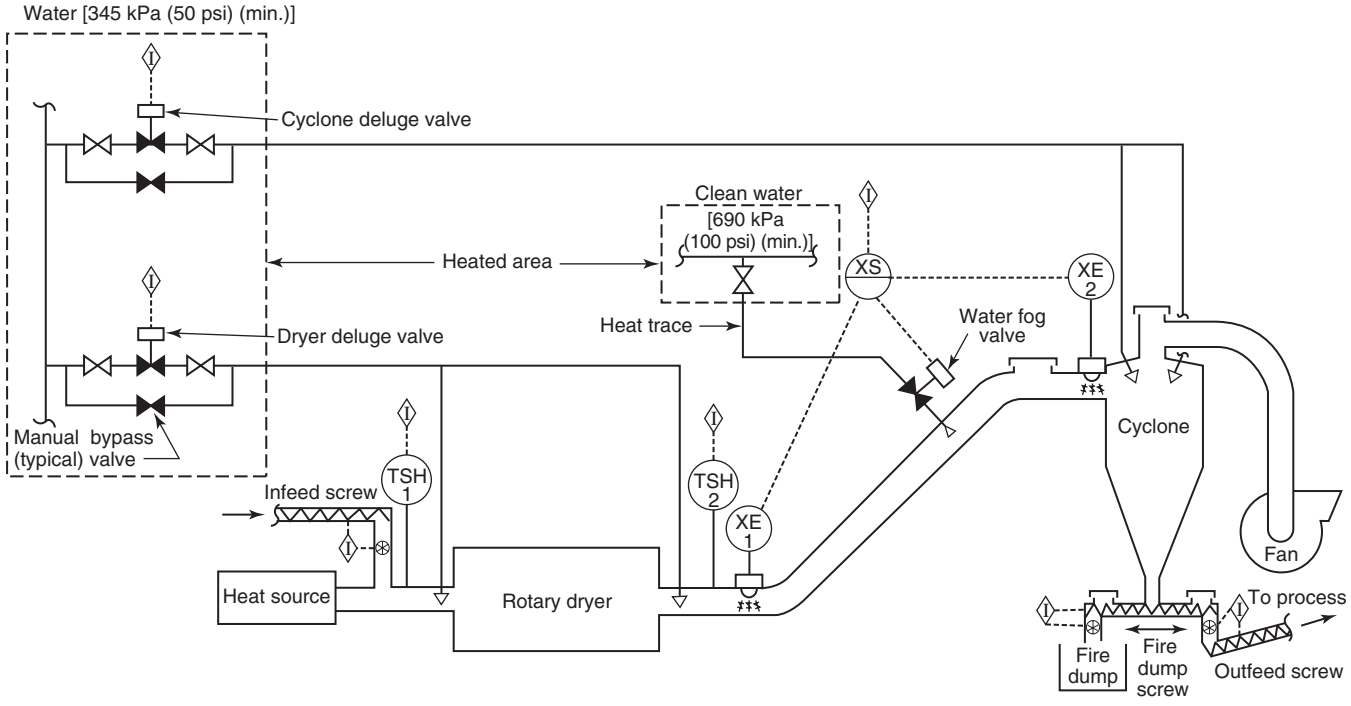

Symbol	Description	Location	Comments
XS	Controller, infrared radiation detection/ suppression system	Dryer operator's control room	Part of a listed spark extinguishing system.
	Nozzle, water fog	Duct between dryer and cyclone	Same as XS.
XE 1	Infrared radiation (spark) detector	Dryer outlet	Same as XS.
XE 2	Infrared radiation (spark) detector	Cyclone inlet	Same as XS.
I	System interlock	Numerous	See interlock logic diagram on Figure D.1(d).

Symbol	Description	Location	Comments
TSH 1	Temperature switch, high limit	Dryer inlet	
TSH 2	Temperature switch, high limit	Dryer outlet	
	Nozzle, water spray	Dryer inlet and outlet, cyclone	See Section 8.1.
	Explosion vent	Cyclone inlet and exhaust outlet, fire dump screw	Additional venting on duct may be warranted, depending on type of material being dried.

FIGURE D.1(c) Typical Interlock Logic for a Particleboard Direct-Fired Rotary Dryer System.
(© 2002 Factory Mutual Insurance Company. Reprinted with permission. All rights reserved. Source: Property Loss Prevention Data Sheet 7-10, "Wood Processing and Woodworking Facilities.")

Copyright 2014 National Fire Protection Association (NFPA). Licensed, by agreement, for individual use and download on October 4, 2014 to LEADER and READER for designated user PATTARAPORN SRITRAKOOL. No other reproduction or transmission in any form permitted without written permission of NFPA. For inquires or to report unauthorized use, contact licensing@nfpa.org.

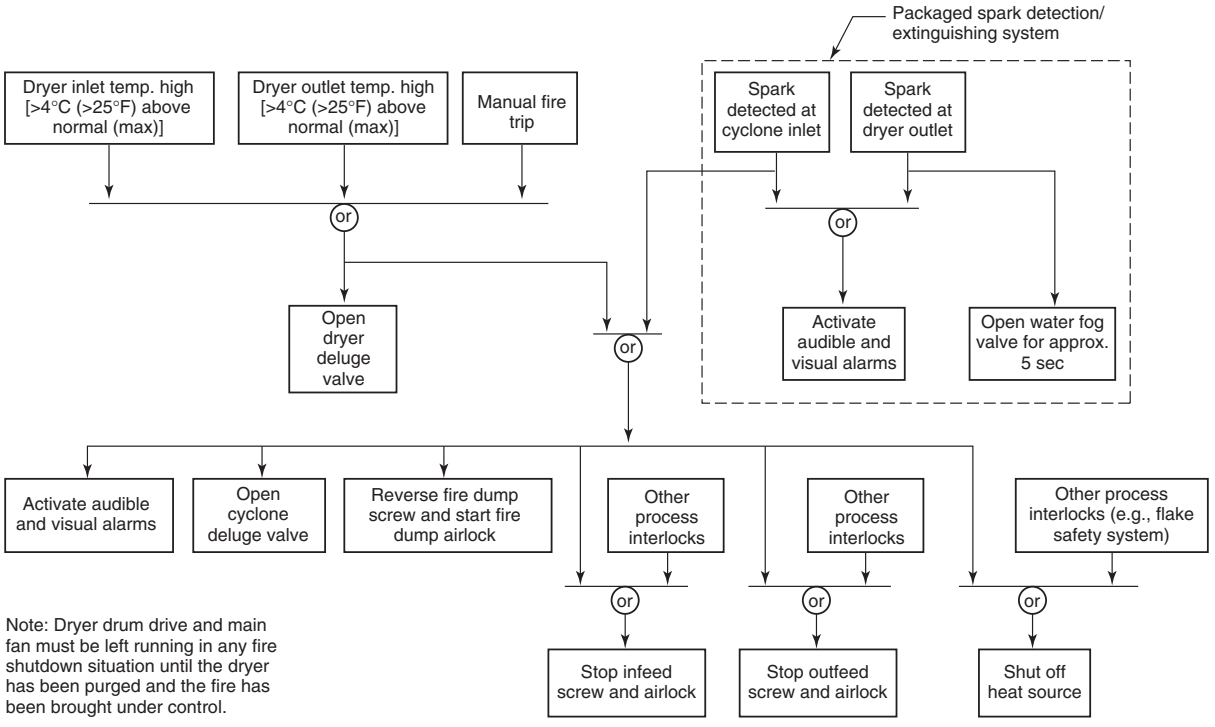

FIGURE D.1(d) Typical Arrangement of a Particleboard Direct-Fired Rotary Dryer System.
(© 2002 Factory Mutual Insurance Company. Reprinted with permission. All rights reserved. Source: Property Loss Prevention Data Sheet 7-10, "Wood Processing and Woodworking Facilities.")

Annex E Automatic Water Spray Deluge Protection for Dryer Systems

This annex is not a part of the requirements of this NFPA document but is included for informational purposes only.

E.1 Automatic water spray deluge protection has proven to be the most effective. Dryers with only one or two heating zones can usually be protected by a single deluge system, but long dryers where the water demand is high [e.g., 7571 L/min (2000 gpm)] can require two or more deluge systems. The dryer geometry will dictate nozzle placement, but the following criteria can be used as a basis for system design:

(1) For conventional tray dryers, provide nozzles on both sides so that one nozzle on each vertical pipe drop is at alternating tier levels and below the bottom tier. Nozzles should have wide-angle spray patterns capable of reaching at least halfway across the tray. Vertical pipe drops should be spaced along the sides of the trays so that the spray patterns overlap in the center of the dryer.
(2) For vertical jet-type dryers, where nozzles are arranged to discharge from only one side, provide one nozzle with a flat spray pattern located at each tier on each vertical pipe drop and below the bottom tier, as shown in Figure E.1(a) and Figure E.1(b). Provide the same type of nozzle on each vertical pipe drop, with wide-angle nozzles on one vertical pipe drop and narrow-angle, longer throw nozzles on the alternating pipe drop. Vertical pipe drops should be spaced along the sides of the trays so that the spray patterns overlap in the center of the dryer.
(3) Provide nozzles on each tier level of the cooling section.
(4) Provide standard upright open sprinklers in the top and side plenum chambers of both standard and vertical jet-type dryers. Heads should be spaced no more than 45 m (13 ft) apart.
(5) Provide standard open sprinklers in each exhaust stack.
(6) Provide water traps [as shown in Figure E.1(b) and Figure E.1(c)] to help prevent air movement through the deluge piping (which can cause plugging). Traps should be inspected weekly to ensure they are kept filled with water.
(7) Provide strainers in the deluge valve water supply line to remove any foreign material in the water supply that could plug nozzles.
(8) Provide a dry pilot head system or other reliable detection system to actuate the deluge system. Figure E.1(a), Figure E.1(c), and Figure E.1(d) show suggested locations of the detectors or pilot heads.
(9) Provide manual pull stations, which are recommended, to trip the deluge system from either side of the dryer.
(10) Interlock the dryer fans and heat source to shut down when the deluge system(s) trips. The dryer conveying system should continue to operate to empty as much combustible material from the dryer as possible.
(11) Tripping of the deluge system is recommended as part of the dryer scheduled cleaning program. For wicket-type dryers, provide standard sprinklers inside at the top of the dryer enclosure and in exhaust plenums and stacks as shown in Figure E.1(e).
(12) Flash fires can readily occur in the resinous deposits above veneer dryers, spreading throughout the draft-curtained area ahead of operating sprinklers. Sprinklers can control the residual fire if properly designed, but they cannot be relied upon to limit the number of heads that will open.

For a diagram of typical sprinkler system arrangements for veneer dryers, see Figure E.1(a) and Figure E.1(b).

Copyright 2014 National Fire Protection Association (NFPA). Licensed, by agreement, for individual use and download on October 4, 2014 to LEADER and READER for designated user PATTARAPORN SRITRAKOOL. No other reproduction or transmission in any form permitted without written permission of NFPA. For inquires or to report unauthorized use, contact licensing@nfpa.org.

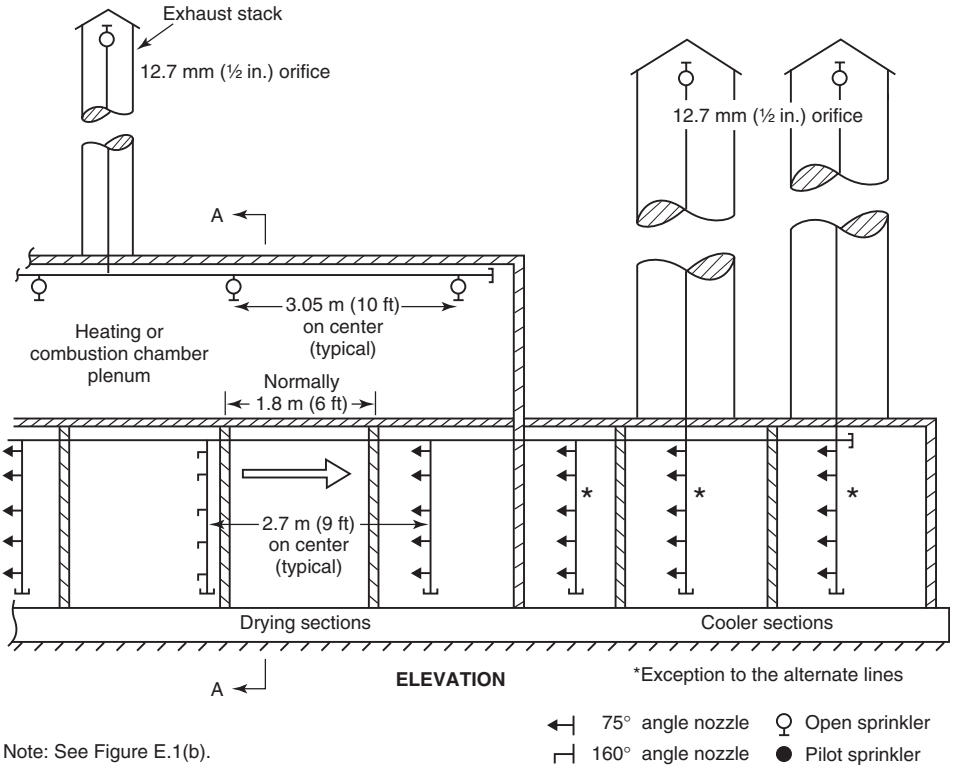

Note: See Figure E.1(b).

FIGURE E.1(a) Typical Arrangement of Deluge Protection for Vertical Jet-Type Dryer. *(© 2002 Factory Mutual Insurance Company. Reprinted with permission. All rights reserved. Source: Property Loss Prevention Data Sheet 7-10, "Wood Processing and Woodworking Facilities.")*

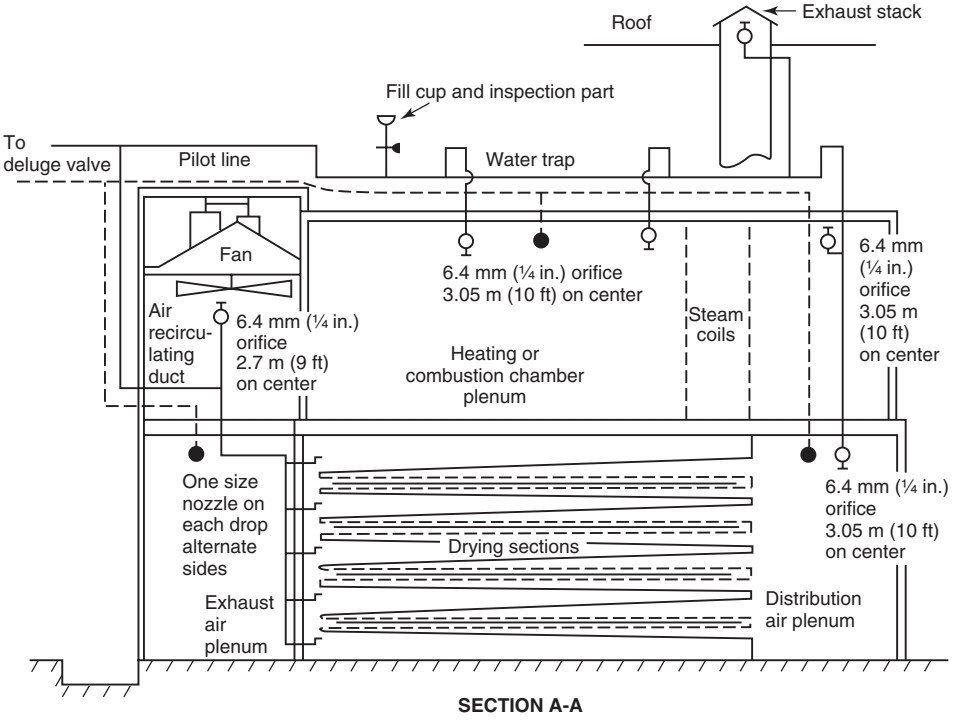

FIGURE E.1(b) Section View A-A of Deluge Protection for Typical Vertical Jet-Type Dryer in Figure E.1(a). *(© 2002 Factory Mutual Insurance Company. Reprinted with permission. All rights reserved. Source: Property Loss Prevention Data Sheet 7-10, "Wood Processing and Woodworking Facilities.")*

Copyright 2014 National Fire Protection Association (NFPA). Licensed, by agreement, for individual use and download on October 4, 2014 to LEADER and READER for designated user PATTARAPORN SRITRAKOOL. No other reproduction or transmission in any form permitted without written permission of NFPA. For inquires or to report unauthorized use, contact licensing@nfpa.org.

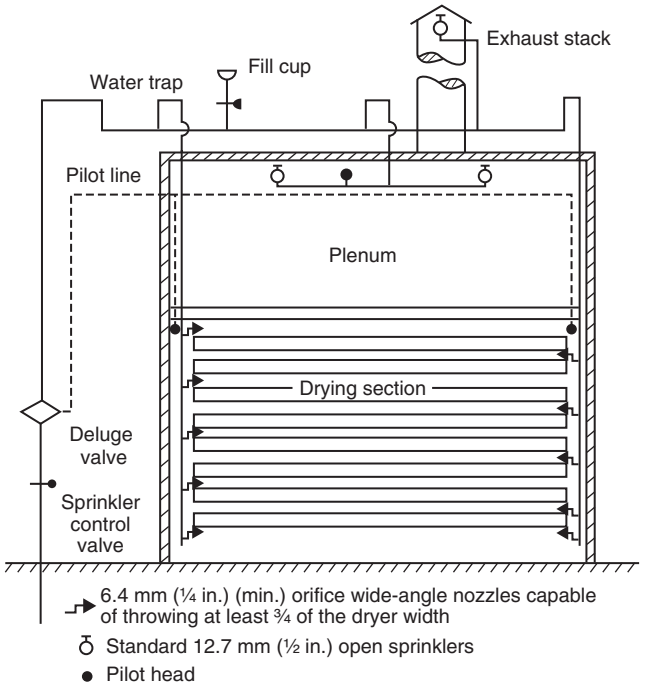

FIGURE E.1(c) Typical Arrangement of Deluge Protection for Standard Veneer Dryer. *(© 2002 Factory Mutual Insurance Company. Reprinted with permission. All rights reserved. Source: Property Loss Prevention Data Sheet 7-10, "Wood Processing and Woodworking Facilities.")*

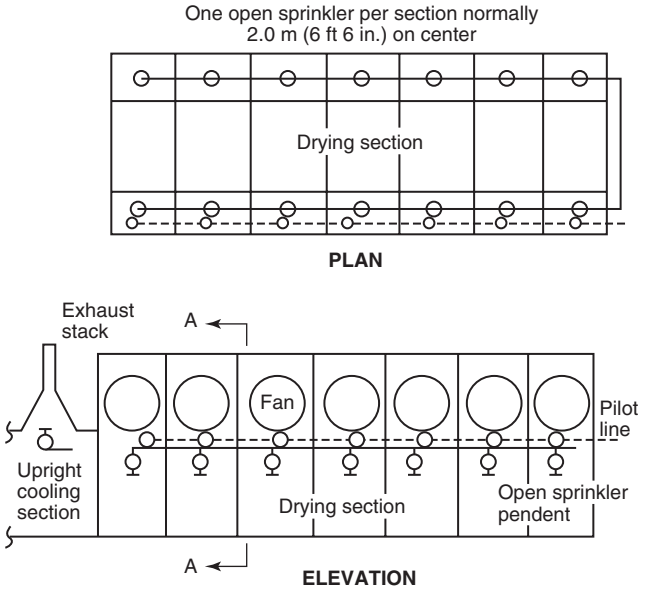

FIGURE E.1(d) Typical Arrangement of Deluge Protection for Special Vertical Jet-Type Dryer. *(© 2002 Factory Mutual Insurance Company. Reprinted with permission. All rights reserved. Source: Property Loss Prevention Data Sheet 7-10, "Wood Processing and Woodworking Facilities.")*

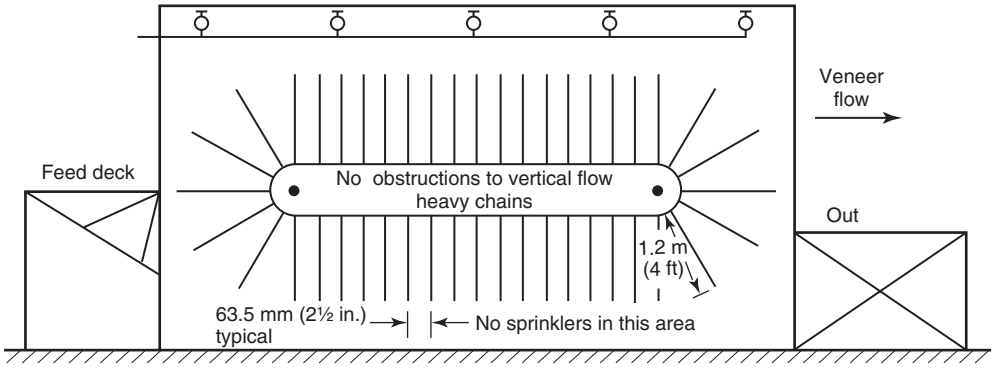

FIGURE E.1(e) Typical Arrangement of Automatic Sprinkler Protection for Wicket-Type Veneer Dryer. *(© 2002 Factory Mutual Insurance Company. Reprinted with permission. All rights reserved. Source: Property Loss Prevention Data Sheet 7-10, "Wood Processing and Woodworking Facilities".)*

Annex F Informational References

F.1 Referenced Publications. The documents or portions thereof listed in this annex are referenced within the informational sections of this standard and are not part of the requirements of this document unless also listed in Chapter 2 for other reasons.

F.1.1 NFPA Publications. National Fire Protection Association, 1 Batterymarch Park, Quincy, MA 02169-7471.

NFPA 1, *Fire Code*, 2012 edition.

NFPA 10, *Standard for Portable Fire Extinguishers*, 2011 edition.

NFPA 13, *Standard for the Installation of Sprinkler Systems*, 2010 edition.

NFPA 15, *Standard for Water Spray Fixed Systems for Fire Protection*, 2012 edition.

NFPA 20, *Standard for the Installation of Stationary Pumps for Fire Protection*, 2010 edition.

NFPA 24, *Standard for the Installation of Private Fire Service Mains and Their Appurtenances*, 2010 edition.

NFPA 25, *Standard for the Inspection, Testing, and Maintenance of Water-Based Fire Protection Systems*, 2011 edition.

NFPA 30, *Flammable and Combustible Liquids Code*, 2012 edition.

Copyright 2014 National Fire Protection Association (NFPA). Licensed, by agreement, for individual use and download on October 4, 2014 to LEADER and READER for designated user PATTARAPORN SRITRAKOOL. No other reproduction or transmission in any form permitted without written permission of NFPA. For inquires or to report unauthorized use, contact licensing@nfpa.org.

NFPA 51B, *Standard for Fire Prevention During Welding, Cutting, and Other Hot Work*, 2009 edition.

NFPA 55, *Compressed Gases and Cryogenic Fluids Code*, 2010 edition.

NFPA 68, *Standard on Explosion Protection by Deflagration Venting*, 2007 edition.

NFPA 69, *Standard on Explosion Prevention Systems*, 2008 edition.

NFPA 70®, *National Electrical Code®*, 2011 edition.

NFPA 72®, *National Fire Alarm and Signaling Code*, 2010 edition.

NFPA 77, *Recommended Practice on Static Electricity*, 2007 edition.

NFPA 80, *Standard for Fire Doors and Other Opening Protectives*, 2010 edition.

NFPA 80A, *Recommended Practice for Protection of Buildings from Exterior Fire Exposures*, 2012 edition.

NFPA 85, *Boiler and Combustion Systems Hazards Code*, 2011 edition.

NFPA *101®*, *Life Safety Code®*, 2012 edition.

NFPA 499, *Recommended Practice for the Classification of Combustible Dusts and of Hazardous (Classified) Locations for Electrical Installations in Chemical Process Areas*, 2008 edition.

NFPA 600, *Standard on Industrial Fire Brigades*, 2010 edition.

NFPA 654, *Standard for the Prevention of Fire and Dust Explosions from the Manufacturing, Processing, and Handling of Combustible Particulate Solids*, 2006 edition.

Fire Protection Guide to Hazardous Materials, 13th edition, 2001.

Fire Protection Handbook, 2003 edition.

Frank, T. 1981. "Fire and Explosion Control in Bag Filter Dust Collection Systems." *Fire Journal*, March, 73–94.

F.1.2 Other Publications.

F.1.2.1 ACGIH Publication. American Conference of Governmental Industrial Hygienists, 1330 Kemper Meadow Drive, Cincinnati, OH 45240-1634.

Industrial Ventilation — a Manual of Recommended Practice, 25th edition, 2004.

F.1.2.2 ASME Publications. American Society of Mechanical Engineers, Three Park Avenue, New York, NY 10016-5990.

ASME *Boiler and Pressure Vessel Code*, 2001.

F.1.2.3 ASTM Publications. ASTM International, 100 Barr Harbor Drive, P.O. Box C700, West Conshohocken, PA 19428-2959.

ASTM E 1226, *Standard Test Method for Explosibility of Dust Clouds*, 2010.

ASTM E 1355, *Standard Guide for Evaluating the Predictive Capability of Deterministic Fire Models*, 2011.

ASTM E 1515, *Standard Test Method for Minimum Explosible Concentration of Combustible Dusts*, 2007.

F.1.2.4 FM Publications. FM Global, 1301 Atwood Avenue, P.O. Box 7500, Johnston, RI 02919.

FM 2-8N, *Installation of Sprinkler Systems,* May 2010.

FM 6-7, *Fluidized Bed Combustors and Boilers,* May 2010.

FM 6-13, *Waste Fuel-Fired Boilers,* May 2010.

FM 7-10, *Wood Processing and Woodworking Facilities,* May 2010.

FM 7-11, *Belt Conveyors,* October 2009.

FM 7-73, *Dust Collectors and Collection Systems,* 2008.

FM 7-76, *Prevention & Mitigation of Combustible Dust Explosions and Fires,* March 2009.

FM 7-99, *Heat Transfer by Organic and Synthetic Fluids,* January 2009.

F.1.2.5 ISO Publications. International Standards Organization, 1 Rue de Varembé, Case Postale 56, Ch-1211 Genève 20, Switzerland.

ISO 6184-1, *Explosion Protection Systems — Part 1: Determination of Explosion Indices of Combustible Dusts in Air*, 1985.

ISO 6184-4, *Explosion Protection Systems — Part 4: Determination of Efficiency of Explosion Suppression Systems*, 1985.

F.1.2.6 SFPE Publications. Society of Fire Protection Engineers, 7315 Wisconsin Avenue, Suite 1225 W, Bethesda, MD 20814.

SFPE Computer Software Directory.

SFPE Engineering Guide to Performance-Based Fire Protection Analysis and Design of Buildings, 2007 edition.

SFPE Handbook of Fire Protection Engineering, 4th edition, 2008.

F.1.2.7 U.S. Government Publications. U.S. Government Printing Office, Washington, DC 20402.

Title 30, Code of Federal Regulations, Part 36, "Approval Requirements for Permissible Mobile Diesel-Powered Transportation Equipment," 2005.

F.1.2.8 Other Publications. Friedman, Raymond. 1992. "An International Survey of Computer Models for Fire and Smoke." *Journal of Fire Protection Engineering*, 4(3), 83–92.

VDI 3673, *Pressure Venting of Dust Explosions*, 2002.

F.2 Informational References. The following documents or portions thereof are listed here as informational resources only. They are not a part of the requirements of this document.

NFPA 497, *Recommended Practice for the Classification of Flammable Liquids, Gases, or Vapors and of Hazardous (Classified) Locations for Electrical Installations in Chemical Process Areas*, 2008 edition.

F.3 References for Extracts in Informational Sections. NFPA 68, *Standard on Explosion Protection by Deflagration Venting*, 2007 edition.

NFPA 654, *Standard for the Prevention of Fire and Dust Explosions from the Manufacturing, Processing, and Handling of Combustible Particulate Solids*, 2006 edition.

Copyright 2014 National Fire Protection Association (NFPA). Licensed, by agreement, for individual use and download on October 4, 2014 to LEADER and READER for designated user PATTARAPORN SRITRAKOOL. No other reproduction or transmission in any form permitted without written permission of NFPA. For inquires or to report unauthorized use, contact licensing@nfpa.org.

Index

Copyright © 2011 National Fire Protection Association. All Rights Reserved.

The copyright in this index is separate and distinct from the copyright in the document that it indexes. The licensing provisions set forth for the document are not applicable to this index. This index may not be reproduced in whole or in part by any means without the express written permission of NFPA.

-A-

Administration ..... Chap. 1
- Application 1.3
- Equivalency 1.5
- Purpose 1.2
- Retroactivity 1.4
- Scope 1.1

Approved
- Definition 3.2.1, A.3.2.1

Authority Having Jurisdiction (AHJ)
- Definition 3.2.2, A.3.2.2

Automatic Water Spray Deluge Protection for Dryer Systems ..... Annex E

-B-

Building Construction ..... Chap. 6
- Compartmentation 6.2, A.6.2
  - Fire Walls, Fire Partitions, and Fire Barrier Walls 6.2.1
  - Protection of Openings and Penetrations 6.2.2
- Occupant Life Safety Systems Means of Egress 6.3
- Prescriptive Requirements 6.1
- Special Requirements 6.4
  - Damage-Limiting Construction 6.4.2
  - Draft Curtains 6.4.3
  - Surfaces and Ledges in Dusty Areas 6.4.1, A.6.4.1

-C-

Combustion Chamber
- Definition 3.3.1

Compartment
- Definition 3.3.2
  - Conversion Procedure 1.6.3

Conveying System Isolation ..... Annex D

Cyclone
- Definition 3.3.3

-D-

Damage-Limiting Construction
- Definition 3.3.4, A.3.3.4

Definitions ..... Chap. 3

Deflagrable Wood Dust
- Definition 3.3.5

Deflagration
- Definition 3.3.6

Deflagration Hazard
- Definition 3.3.7, A.3.3.7

Dry Nondeflagrable Wood Dust
- Definition 3.3.8

Dust Collection Systems
- Definition 3.3.9, A.3.3.9

Dust Collector
- Cyclone
  - Definition 3.3.10.1, A.3.3.10.1
- Definition 3.3.10
- Enclosureless Dust Collector
  - Definition 3.3.10.2, A.3.3.10.2

-E-

Explanatory Material ..... Annex A

Explosion
- Definition 3.3.11

Explosion Hazard
- Definition 3.3.12

Explosion Protection ..... Annex B

-F-

Fire Protection ..... Chap. 9
- General Fire Protection 9.1
  - Automatic Sprinklers 9.1.1, A.9.1.1
  - Detection and Extinguishing Systems 9.1.2, A.9.1.2
  - Inside Hose Stations 9.1.4, A.9.1.4
  - Portable Fire Extinguishers 9.1.6, A.9.1.6
  - Water Supply 9.1.5

Floor Sweep
- Definition 3.3.13

-G-

General Requirements ..... Chap. 4
- Compliance Options 4.7
  - Options 4.7.1
  - Performance-Based Design 4.7.2
  - Prescriptive-Based Design 4.7.3
- Deflagration Hazard 4.2
- Designer and Installer Qualifications 4.5
- Goal 4.1
- Management of Change 4.4
- Objectives 4.6
  - Life Safety 4.6.1
  - Mission Continuity 4.6.3, A.4.6.3
  - Mitigation of Fire Spread and Explosions 4.6.4, A.4.6.4
  - Structural Integrity 4.6.2
- Process Analysis 4.3, A.4.3

Green Material
- Definition 3.3.14

-H-

Hog (Wood Hog)
- Definition 3.3.15

Housekeeping ..... Chap. 11
- Cleanup Methods 11.2
  - Removal of Dust 11.2.1
- General Requirements 11.1
  - Fugitive Dust Control 11.1.2

Human Element ..... Chap. 10
- Contractors and Subcontractors 10.5
- Emergency Planning and Response 10.12
- Employee Training 10.4, A.10.4
- Hot Work 10.11, A.10.11
- Impairments of Fire Protection and Explosion Prevention Systems 10.9
- Incident Investigation 10.8
- Inspection and Maintenance 10.2
  - Dust Collection Systems 10.2.4
- Management of Change 10.7, A.10.7
- Objective 10.1
- Portable Appliances 10.6
- Record Retention 10.3
- Smoking 10.10

Copyright 2014 National Fire Protection Association (NFPA). Licensed, by agreement, for individual use and download on October 4, 2014 to LEADER and READER for designated user PATTARAPORN SRITRAKOOL. No other reproduction or transmission in any form permitted without written permission of NFPA. For inquires or to report unauthorized use, contact licensing@nfpa.org.

-I-

Informational Primer on Spark Detection and Extinguishing Systems ..... Annex C
Informational References ..... Annex F

-K-

Kiln Dryers
Definition 3.3.16

-L-

Labeled
Definition 3.2.3
Listed
Definition 3.2.4, A.3.2.4

-M-

Minimum Explosible Concentration (MEC)
Definition 3.3.17, A.3.3.17
Moisture Content (Wet Basis)
Definition 3.3.18, A.3.3.18

-N-

Nonvaporizing Thermal Oil Heating System
Definition 3.3.19

-P-

Performance-Based Design Option ..... Chap. 5
Design Fire Scenarios 5.3
Deflagration Scenarios 5.3.2
Fire Scenarios 5.3.1
Evaluation of Proposed Design 5.4
General 5.4.1, A.5.4.1
Input Data 5.4.3
Data 5.4.3.1
Data Requirements 5.4.3.2
Uncertainty and Conservatism of Data 5.4.3.3, A.5.4.3.3
Output Data 5.4.4, A.5.4.4
Use 5.4.2
Validity 5.4.5
General Requirements 5.1
Approved Qualifications 5.1.1
Documentation Requirements 5.1.5, A.5.1.5
Independent Review 5.1.2
Maintenance of the Design Features 5.1.4
Sources of Data 5.1.3
Performance Criteria 5.2
Effects of Deflagrations 5.2.6
Mission Continuity 5.2.3
Occupant Life Safety 5.2.1
Prevention of Fire Extension 5.2.5
Prevention of Ignition 5.2.4
Structural Integrity 5.2.2
Safety Factors 5.5
Pneumatic Conveying System
Definition 3.3.20
Prevention of Ignition and Control of Ignition Sources ..... Chap. 7
Electrical Systems 7.3
Fans 7.14
Foreign Material 7.12
Friction 7.13
Fuel-Fired Equipment 7.7
Hot Surfaces 7.4
Hot Work 7.2
Industrial Trucks 7.5, A.7.5
Lighting 7.6, A.7.6
Lightning Protection 7.8, A.7.8
Machinery Setup and Maintenance 7.11
Machines and Processing Equipment 7.10, A.7.10
Cutter and Abrasive Maintenance 7.10.2
Feed-Rate Controls (Hot Cuts) 7.10.1, A.7.10.1
Portable Electric Equipment and Appliances 7.18, A.7.18
Prescriptive Requirements 7.1
Propellant-Actuated Tools 7.16
Smoking 7.17
Spontaneous Ignition and Chemical Action 7.15
Static Electricity 7.9, A.7.9
Primary and Equivalent Values 1.6.2, A.1.6.2
Processes, Operations, and Special Systems ..... Chap. 8
Dipping and Coating 8.8
Dryer Systems 8.6
Conveyor Dryers 8.6.3, A.8.6.3
Finishing Room Dryers 8.6.6
Flash Tube Dryers 8.6.4, A.8.6.4
Kiln Dryers 8.6.5, A.8.6.5
Rotary Dryers 8.6.2, A.8.6.2
Veneer and Fiberboard Dryers 8.6.1, A.8.6.1
General 8.1
Applicability 8.1.1, A.8.1.1
Fire Protection and Explosion Suppression Systems 8.1.3
Prescriptive Requirements 8.1.2
Hot Presses 8.11
Continuous Presses 8.11.1
Multiopening Batch-Type Presses 8.11.2
Panel Product Manufacturing Machinery 8.5
Dust 8.5.4
Particulate Conveying and Dust Collection Systems 8.2
Conveying System Isolation 8.2.4, A.8.2.4
Hazard Determination 8.2.1, A.8.2.1
Mechanical Conveying Systems 8.2.3
General Requirements 8.2.3.1
Mechanical Conveying Equipment with a Deflagration Hazard 8.2.3.3
Mechanical Conveying Equipment with a Fire Hazard 8.2.3.2, A.8.2.3.2
Pneumatic Conveying and Dust Collection Systems 8.2.2
Duct System 8.2.2.2
Ducts with a Deflagration Hazard 8.2.2.2.3, A.8.2.2.2.3
Ducts with a Fire Hazard 8.2.2.2.2, A.8.2.2.2.2
General Requirements 8.2.2.2.1
Hazard Determination 8.2.2.2.1.9, A.8.2.2.2.1.9
Dust Collectors 8.2.2.5
Dust Collectors with Deflagration Hazards 8.2.2.5.3, A.8.2.2.5.3
Dust Collectors with Fire Hazards 8.2.2.5.2, A.8.2.2.5.2
General Requirements 8.2.2.5.1
Fans or Blowers (Air-Moving Devices) 8.2.2.4
General Requirements 8.2.2.1
Hoods and Enclosures 8.2.2.3
Recycling of Air-Material Separator Exhaust 8.2.2.6
Particulate Size Reduction Equipment 8.4, A.8.4
Deemed to Satisfy Prescriptive Requirements 8.4.2
General Requirements 8.4.2.2
Hazard Analysis 8.4.2.1
Size Reduction Equipment with a Deflagration Hazard 8.4.2.4, A.8.4.2.4
Size Reduction Equipment with a Fire Hazard 8.4.2.3, A.8.4.2.3
Hazard Analysis and Design Criteria 8.4.1
Pollution Control Equipment 8.9, A.8.9
Spray Finishing 8.7
Storage 8.10
Dry Lumber 8.10.1
Flammable Liquid Storage 8.10.2
Indoor Dry, Fine Particulate Storage 8.10.4
Silos and Storage Bins 8.10.3

Copyright 2014 National Fire Protection Association (NFPA). Licensed, by agreement, for individual use and download on October 4, 2014 to LEADER and READER for designated user PATTARAPORN SRITRAKOOL. No other reproduction or transmission in any form permitted without written permission of NFPA. For inquires or to report unauthorized use, contact licensing@nfpa.org.

Thermal Oil Heating Systems 8.3, A.8.3
Deemed to Satisfy Prescriptive Criteria 8.3.2
Expansion Tank 8.3.2.5
Fire Protection 8.3.2.10, A.8.3.2.10
Fuel Burner Controls and Interlocks 8.3.2.8
General Criteria 8.3.2.1, A.8.3.2.1
Heaters 8.3.2.3
Location and Construction 8.3.2.2
Operational Considerations 8.3.2.9
Piping 8.3.2.4
Safety Controls and Interlocks 8.3.2.7
Storage Tanks 8.3.2.6, A.8.3.2.6
Hazard Determination and Design Criteria 8.3.1
Wood Scrap or Wood Waste Processing and Disposal 8.12

-R-

Referenced Publications ..... Chap. 2
General 2.1
NFPA Publications 2.2
Other Publications 2.3
References for Extracts in Mandatory Sections 2.4

-S-

Shall
Definition 3.2.5
SI Units 1.6.1
Standard
Definition 3.2.6
Stuck Lumber
Definition 3.3.21

-T-

Thermal Oil Heating System
Definition 3.3.22
Nonvaporizing Thermal Oil Heating System
Definition 3.3.22.1
Vaporizing Thermal Oil Heating System
Definition 3.3.22.2
Thermal Oil Used as Heat Transfer Fluid
Definition 3.3.23

-V-

Vaporizing Thermal Oil Heating System
Definition 3.3.24

-W-

Wood
Definition 3.3.25
Wood Dust
Definition 3.3.27
Deflagrable Wood Dust
Definition 3.3.27.1, A.3.3.27.1
Dry Nondeflagrable Wood Dust
Definition 3.3.27.2
Wood-Derived Materials
Definition 3.3.26

Copyright 2014 National Fire Protection Association (NFPA). Licensed, by agreement, for individual use and download on October 4, 2014 to LEADER and READER for designated user PATTARAPORN SRITRAKOOL. No other reproduction or transmission in any form permitted without written permission of NFPA. For inquires or to report unauthorized use, contact licensing@nfpa.org.

Tentative Interim Amendment

NFPA® 664

Standard for the Prevention of Fire and Explosions in Wood Processing and Woodworking Facilities

2012 Edition

Reference: 8.2.2.2.3 through 8.2.2.2.6
TIA 12-1
(SC 14-3-10/TIA Log #1119)

Pursuant to Section 5 of the NFPA *Regulations Governing the Development of NFPA Standards*, the National Fire Protection Association has issued the following Tentative Interim Amendment to NFPA 664, *Standard for the Prevention of Fire and Explosions in Wood Processing and Woodworking Facilities,* 2012 edition. The TIA was processed by the Technical Committee on Wood and Cellulosic Materials Processing and the Combustible Dusts Correlating Committee, and was issued by the Standards Council on March 3, 2014, with an effective date of March 23, 2014.

A Tentative Interim Amendment is tentative because it has not been processed through the entire standards-making procedures. It is interim because it is effective only between editions of the standard. A TIA automatically becomes a public input of the proponent for the next edition of the standard; as such, it then is subject to all of the procedures of the standards-making process.

1. Revise 8.2.2.2.3 through 8.2.2.2.6 to read as follows:

8.2.2.2.3* Ducts with a Deflagration Hazard. Ducts having a deflagration hazard shall be designed, constructed, and installed pursuant to one of the following:

(1)* Ducts, including all access hatches, shall be constructed of metal of sufficient strength to withstand the maximum unvented deflagration pressure of the material being conveyed.

(2)* Metal ducts shall be protected by a listed deflagration suppression system that has a design strength exceeding the maximum reduced deflagration pressure.

(3) Metal ducts located indoors shall be equipped with deflagration relief vents and vent ducts designed, installed, and maintained in accordance with NFPA 68, *Standard on Explosion Protection by Deflagration Venting*, and shall have a design strength exceeding the maximum reduced deflagration pressure.

(4) Metal ducts located indoors shall be equipped with deflagration relief vents and vent ducts designed, installed, and maintained in accordance with NFPA 68, *Standard on Explosion Protection by Deflagration Venting*, that exhaust through listed flame-quenching devices and shall have a design strength exceeding the maximum reduced deflagration pressure.

(5) Metal ducts located outdoors shall be equipped with deflagration relief vents designed, installed, and maintained in accordance with NFPA 68, *Standard on Explosion Protection by Deflagration Venting*, and shall have a design strength exceeding the maximum reduced deflagration pressure.

Copyright 2014 National Fire Protection Association (NFPA). Licensed, by agreement, for individual use and download on October 4, 2014 to LEADER and READER for designated user PATTARAPORN SRITRAKOOL. No other reproduction or transmission in any form permitted without written permission of NFPA. For inquires or to report unauthorized use, contact licensing@nfpa.org.

(6)* Metal ducts that are located outdoors and have weaker construction shall be permitted to be used subject to a risk analysis acceptable to the authority having jurisdiction.

2. Delete the related annex material in former 8.2.2.2.3(3), (4), and (5).

Issue Date: March 3, 2014

Effective Date: March 23, 2014

(Note: For further information on NFPA Codes and Standards, please see www.nfpa.org/codelist**)**
Copyright © 2014 All Rights Reserved
NATIONAL FIRE PROTECTION ASSOCIATION

Copyright 2014 National Fire Protection Association (NFPA). Licensed, by agreement, for individual use and download on October 4, 2014 to LEADER and READER for designated user PATTARAPORN SRITRAKOOL. No other reproduction or transmission in any form permitted without written permission of NFPA. For inquires or to report unauthorized use, contact licensing@nfpa.org.

Sequence of Events Leading to Issuance of an NFPA Committee Document

Step 1: Call for Proposals

- Proposed new Document or new edition of an existing Document is entered into one of two yearly revision cycles, and a Call for Proposals is published.

Step 2: Report on Proposals (ROP)

- Committee meets to act on Proposals, to develop its own Proposals, and to prepare its Report.
- Committee votes by written ballot on Proposals. If two-thirds approve, Report goes forward. Lacking two-thirds approval, Report returns to Committee.
- Report on Proposals (ROP) is published for public review and comment.

Step 3: Report on Comments (ROC)

- Committee meets to act on Public Comments to develop its own Comments, and to prepare its report.
- Committee votes by written ballot on Comments. If two-thirds approve, Report goes forward. Lacking two-thirds approval, Report returns to Committee.
- Report on Comments (ROC) is published for public review.

Step 4: Technical Report Session

- "*Notices of intent to make a motion*" are filed, are reviewed, and valid motions are certified for presentation at the Technical Report Session. ("Consent Documents" that have no certified motions bypass the Technical Report Session and proceed to the Standards Council for issuance.)
- NFPA membership meets each June at the Annual Meeting Technical Report Session and acts on Technical Committee Reports (ROP and ROC) for Documents with "certified amending motions."
- Committee(s) vote on any amendments to Report approved at NFPA Annual Membership Meeting.

Step 5: Standards Council Issuance

- Notification of intent to file an appeal to the Standards Council on Association action must be filed within 20 days of the NFPA Annual Membership Meeting.
- Standards Council decides, based on all evidence, whether or not to issue Document or to take other action, including hearing any appeals.

Committee Membership Classifications

The following classifications apply to Technical Committee members and represent their principal interest in the activity of the committee.

M *Manufacturer:* A representative of a maker or marketer of a product, assembly, or system, or portion thereof, that is affected by the standard.

U *User:* A representative of an entity that is subject to the provisions of the standard or that voluntarily uses the standard.

I/M *Installer/Maintainer:* A representative of an entity that is in the business of installing or maintaining a product, assembly, or system affected by the standard.

L *Labor:* A labor representative or employee concerned with safety in the workplace.

R/T *Applied Research/Testing Laboratory:* A representative of an independent testing laboratory or independent applied research organization that promulgates and/or enforces standards.

E *Enforcing Authority:* A representative of an agency or an organization that promulgates and/or enforces standards.

I *Insurance:* A representative of an insurance company, broker, agent, bureau, or inspection agency.

C *Consumer:* A person who is, or represents, the ultimate purchaser of a product, system, or service affected by the standard, but who is not included in the *User* classification.

SE *Special Expert:* A person not representing any of the previous classifications, but who has a special expertise in the scope of the standard or portion thereof.

NOTES:
1. "Standard" connotes code, standard, recommended practice, or guide.
2. A representative includes an employee.
3. While these classifications will be used by the Standards Council to achieve a balance for Technical Committees, the Standards Council may determine that new classifications of members or unique interests need representation in order to foster the best possible committee deliberations on any project. In this connection, the Standards Council may make appointments as it deems appropriate in the public interest, such as the classification of "Utilities" in the National Electrical Code Committee.
4. Representatives of subsidiaries of any group are generally considered to have the same classification as the parent organization.

Copyright 2014 National Fire Protection Association (NFPA). Licensed, by agreement, for individual use and download on October 4, 2014 to LEADER and READER for designated user PATTARAPORN SRITRAKOOL. No other reproduction or transmission in any form permitted without written permission of NFPA. For inquires or to report unauthorized use, contact licensing@nfpa.org.

NFPA Document Proposal Form

NOTE: All Proposals must be received by 5:00 pm EST/EDST on the published Proposal Closing Date.

For further information on the standards-making process, please contact the Codes and Standards Administration at 617-984-7249 or visit www.nfpa.org/codes.

For technical assistance, please call NFPA at 1-800-344-3555.

FOR OFFICE USE ONLY

Log #: _____

Date Rec'd: _____

Please indicate in which format you wish to receive your ROP/ROC ☐ **electronic** ☐ **paper** ☒ **download**
(Note: If choosing the download option, you must view the ROP/ROC from our website; no copy will be sent to you.)

Date April 1, 200X **Name** John J. Doe **Tel. No.** 716-555-1234

Company Air Canada Pilot's Association **Email**

Street Address 123 Summer Street Lane **City** Lewiston **State** NY **Zip** 14092

******If you wish to receive a hard copy, a street address MUST be provided. Deliveries cannot be made to PO boxes.***

Please indicate organization represented (if any)

1. (a) NFPA Document Title National Fuel Gas Code **NFPA No. & Year** 54, 200X Edition

(b) Section/Paragraph 3.3

2. Proposal Recommends (check one): ☐ new text ☒ revised text ☐ deleted text

3. Proposal (include proposed new or revised wording, or identification of wording to be deleted): [Note: Proposed text should be in legislative format; i.e., use underscore to denote wording to be inserted (inserted wording) and strike-through to denote wording to be deleted (~~deleted wording~~).]

Revise definition of effective ground-fault current path to read:

3.3.78 Effective Ground-Fault Current Path. An intentionally constructed, permanent, low impedance electrically conductive path designed and intended to carry ~~underground~~ electric fault current ~~conditions~~ from the point of a ground fault on a wiring system to the electrical supply source.

4. Statement of Problem and Substantiation for Proposal: (Note: State the problem that would be resolved by your recommendation; give the specific reason for your Proposal, including copies of tests, research papers, fire experience, etc. If more than 200 words, it may be abstracted for publication.)

Change uses proper electrical terms.

5. Copyright Assignment

(a) ☐ **I am the author of the text or other material (such as illustrations, graphs) proposed in the Proposal.**

(b) ☒ **Some or all of the text or other material proposed in this Proposal was not authored by me. Its source is as follows:** (please identify which material and provide complete information on its source)

ABC Co.

I hereby grant and assign to the NFPA all and full rights in copyright in this Proposal and understand that I acquire no rights in any publication of NFPA in which this Proposal in this or another similar or analogous form is used. Except to the extent that I do not have authority to make an assignment in materials that I have identified in (b) above, I hereby warrant that I am the author of this Proposal and that I have full power and authority to enter into this assignment.

Signature (Required) John J. Doe

PLEASE USE SEPARATE FORM FOR EACH PROPOSAL

Mail to: Secretary, Standards Council · National Fire Protection Association
1 Batterymarch Park · Quincy, MA 02169-7471 OR
Fax to: (617) 770-3500 OR Email to: proposals_comments@nfpa.org

06/09-B

SAMPLE

Copyright 2014 National Fire Protection Association (NFPA). Licensed, by agreement, for individual use and download on October 4, 2014 to LEADER and READER for designated user PATTARAPORN SRITRAKOOL. No other reproduction or transmission in any form permitted without written permission of NFPA. For inquires or to report unauthorized use, contact licensing@nfpa.org.

NFPA Document Proposal Form

NOTE: All Proposals must be received by 5:00 pm EST/EDST on the published Proposal Closing Date.

For further information on the standards-making process, please contact the Codes and Standards Administration at 617-984-7249 or visit www.nfpa.org/codes.

For technical assistance, please call NFPA at 1-800-344-3555.

FOR OFFICE USE ONLY

Log #: _____

Date Rec'd: _____

Please indicate in which format you wish to receive your ROP/ROC ☐ electronic ☐ paper ☐ download
(Note: If choosing the download option, you must view the ROP/ROC from our website; no copy will be sent to you.)

Date _____ **Name** _____ **Tel. No.** _____

Company _____ **Email** _____

Street Address _____ **City** _____ **State** _____ **Zip** _____

******If you wish to receive a hard copy, a street address MUST be provided. Deliveries cannot be made to PO boxes.***

Please indicate organization represented (if any) _____

1. (a) NFPA Document Title _____ **NFPA No. & Year** _____

(b) Section/Paragraph _____

2. Proposal Recommends (check one): ☐ new text ☐ revised text ☐ deleted text

3. Proposal (include proposed new or revised wording, or identification of wording to be deleted): [Note: Proposed text should be in legislative format; i.e., use underscore to denote wording to be inserted (inserted wording) and strike-through to denote wording to be deleted (~~deleted wording~~).]

4. Statement of Problem and Substantiation for Proposal: (Note: State the problem that would be resolved by your recommendation; give the specific reason for your Proposal, including copies of tests, research papers, fire experience, etc. If more than 200 words, it may be abstracted for publication.)

5. Copyright Assignment

(a) ☐ I am the author of the text or other material (such as illustrations, graphs) proposed in the Proposal.

(b) ☐ Some or all of the text or other material proposed in this Proposal was not authored by me. Its source is as follows: (please identify which material and provide complete information on its source)

_____

I hereby grant and assign to the NFPA all and full rights in copyright in this Proposal and understand that I acquire no rights in any publication of NFPA in which this Proposal in this or another similar or analogous form is used. Except to the extent that I do not have authority to make an assignment in materials that I have identified in (b) above, I hereby warrant that I am the author of this Proposal and that I have full power and authority to enter into this assignment.

Signature (Required) _____

PLEASE USE SEPARATE FORM FOR EACH PROPOSAL

Mail to: Secretary, Standards Council · National Fire Protection Association
1 Batterymarch Park · Quincy, MA 02169-7471 OR
Fax to: (617) 770-3500 OR Email to: proposals_comments@nfpa.org

06/09-C