Copyright 2014 National Fire Protection Association (NFPA). Licensed, by agreement, for individual use and download on October 4, 2014 to LEADER and READER for designated user PATTARAPORN SRITRAKOOL. No other reproduction or transmission in any form permitted without written permission of NFPA. For inquires or to report unauthorized use, contact licensing@nfpa.org.

# NFPA® 654

# Standard for the Prevention of Fire and Dust Explosions from the Manufacturing, Processing, and Handling of Combustible Particulate Solids

## 2013 Edition




NFPA, 1 Batterymarch Park, Quincy, MA 02169-7471
An International Codes and Standards Organization

Become a Member
Subscribe to the NATIONAL FIRE CODES SUBSCRIPTION SERVICE
Register for Seminars, Webinars, and Online Courses
Visit the NFPA Catalog

Copyright 2014 National Fire Protection Association (NFPA). Licensed, by agreement, for individual use and download on October 4, 2014 to LEADER and READER for designated user PATTARAPORN SRITRAKOOL. No other reproduction or transmission in any form permitted without written permission of NFPA. For inquires or to report unauthorized use, contact licensing@nfpa.org.

## IMPORTANT NOTICES AND DISCLAIMERS CONCERNING NFPA® DOCUMENTS
## NOTICE AND DISCLAIMER OF LIABILITY CONCERNING THE USE OF NFPA DOCUMENTS

NFPA® codes, standards, recommended practices, and guides ("NFPA Documents"), of which the document contained herein is one, are developed through a consensus standards development process approved by the American National Standards Institute. This process brings together volunteers representing varied viewpoints and interests to achieve consensus on fire and other safety issues. While the NFPA administers the process and establishes rules to promote fairness in the development of consensus, it does not independently test, evaluate, or verify the accuracy of any information or the soundness of any judgments contained in NFPA Documents.

The NFPA disclaims liability for any personal injury, property or other damages of any nature whatsoever, whether special, indirect, consequential or compensatory, directly or indirectly resulting from the publication, use of, or reliance on NFPA Documents. The NFPA also makes no guaranty or warranty as to the accuracy or completeness of any information published herein.

In issuing and making NFPA Documents available, the NFPA is not undertaking to render professional or other services for or on behalf of any person or entity. Nor is the NFPA undertaking to perform any duty owed by any person or entity to someone else. Anyone using this document should rely on his or her own independent judgment or, as appropriate, seek the advice of a competent professional in determining the exercise of reasonable care in any given circumstances.

The NFPA has no power, nor does it undertake, to police or enforce compliance with the contents of NFPA Documents. Nor does the NFPA list, certify, test, or inspect products, designs, or installations for compliance with this document. Any certification or other statement of compliance with the requirements of this document shall not be attributable to the NFPA and is solely the responsibility of the certifier or maker of the statement.

ISBN: 978-145590436-5 (Print)
ISBN: 978-145590485-3 (PDF) 8/12

Copyright 2014 National Fire Protection Association (NFPA). Licensed, by agreement, for individual use and download on October 4, 2014 to LEADER and READER for designated user PATTARAPORN SRITRAKOOL. No other reproduction or transmission in any form permitted without written permission of NFPA. For inquires or to report unauthorized use, contact licensing@nfpa.org.

# IMPORTANT NOTICES AND DISCLAIMERS CONCERNING NFPA DOCUMENTS

## ADDITIONAL NOTICES AND DISCLAIMERS

### Updating of NFPA Documents

Users of NFPA codes, standards, recommended practices, and guides ("NFPA Documents") should be aware that these documents may be superseded at any time by the issuance of new editions or may be amended from time to time through the issuance of Tentative Interim Amendments. An official NFPA Document at any point in time consists of the current edition of the document together with any Tentative Interim Amendments and any Errata then in effect. In order to determine whether a given document is the current edition and whether it has been amended through the issuance of Tentative Interim Amendments or corrected through the issuance of Errata, consult appropriate NFPA publications such as the National Fire Codes® Subscription Service, visit the NFPA website at www.nfpa.org, or contact the NFPA at the address listed below.

### Interpretations of NFPA Documents

A statement, written or oral, that is not processed in accordance with Section 6 of the Regulations Governing Committee Projects shall not be considered the official position of NFPA or any of its Committees and shall not be considered to be, nor be relied upon as, a Formal Interpretation.

### Patents

The NFPA does not take any position with respect to the validity of any patent rights referenced in, related to, or asserted in connection with an NFPA Document. The users of NFPA Documents bear the sole responsibility for determining the validity of any such patent rights, as well as the risk of infringement of such rights, and the NFPA disclaims liability for the infringement of any patent resulting from the use of or reliance on NFPA Documents.

NFPA adheres to the policy of the American National Standards Institute (ANSI) regarding the inclusion of patents in American National Standards ("the ANSI Patent Policy"), and hereby gives the following notice pursuant to that policy:

**NOTICE:** The user's attention is called to the possibility that compliance with an NFPA Document may require use of an invention covered by patent rights. NFPA takes no position as to the validity of any such patent rights or as to whether such patent rights constitute or include essential patent claims under the ANSI Patent Policy. If, in connection with the ANSI Patent Policy, a patent holder has filed a statement of willingness to grant licenses under these rights on reasonable and nondiscriminatory terms and conditions to applicants desiring to obtain such a license, copies of such filed statements can be obtained, on request, from NFPA. For further information, contact the NFPA at the address listed below.

### Law and Regulations

Users of NFPA Documents should consult applicable federal, state, and local laws and regulations. NFPA does not, by the publication of its codes, standards, recommended practices, and guides, intend to urge action that is not in compliance with applicable laws, and these documents may not be construed as doing so.

### Copyrights

NFPA Documents are copyrighted by the NFPA. They are made available for a wide variety of both public and private uses. These include both use, by reference, in laws and regulations, and use in private self-regulation, standardization, and the promotion of safe practices and methods. By making these documents available for use and adoption by public authorities and private users, the NFPA does not waive any rights in copyright to these documents.

Use of NFPA Documents for regulatory purposes should be accomplished through adoption by reference. The term "adoption by reference" means the citing of title, edition, and publishing information only. Any deletions, additions, and changes desired by the adopting authority should be noted separately in the adopting instrument. In order to assist NFPA in following the uses made of its documents, adopting authorities are requested to notify the NFPA (Attention: Secretary, Standards Council) in writing of such use. For technical assistance and questions concerning adoption of NFPA Documents, contact NFPA at the address below.

### For Further Information

All questions or other communications relating to NFPA Documents and all requests for information on NFPA procedures governing its codes and standards development process, including information on the procedures for requesting Formal Interpretations, for proposing Tentative Interim Amendments, and for proposing revisions to NFPA documents during regular revision cycles, should be sent to NFPA headquarters, addressed to the attention of the Secretary, Standards Council, NFPA, 1 Batterymarch Park, P.O. Box 9101, Quincy, MA 02169-7471; email: stds_admin@nfpa.org

For more information about NFPA, visit the NFPA website at www.nfpa.org.

Copyright 2014 National Fire Protection Association (NFPA). Licensed, by agreement, for individual use and download on October 4, 2014 to LEADER and READER for designated user PATTARAPORN SRITRAKOOL. No other reproduction or transmission in any form permitted without written permission of NFPA. For inquires or to report unauthorized use, contact licensing@nfpa.org.



Copyright © 2012 National Fire Protection Association®. All Rights Reserved.

**NFPA® 654**

**Standard for the**

# Prevention of Fire and Dust Explosions from the Manufacturing, Processing, and Handling of Combustible Particulate Solids

**2013 Edition**

This edition of NFPA 654, *Standard for the Prevention of Dust Explosions from the Manufacturing, Processing, and Handling of Combustible Particulate Solids*, was prepared by the Technical Committee on Handling and Conveying of Dusts, Vapors, and Gases. It was issued by the Standards Council on May 29, 2012, with an effective date of June 18, 2012, and supersedes all previous editions.

This edition of NFPA 654 was approved as an American National Standard on June 18, 2012.

## Origin and Development of NFPA 654

NFPA 654 was initiated by the Committee on Dust Explosion Hazards in 1943 and originally applied only to the prevention of dust explosions in the plastics industry. As such, it was tentatively adopted in 1944 and officially adopted in 1945. Amendments were adopted in 1946, 1959, 1963, and 1970. The 1970 edition was reconfirmed in 1975.

In 1976, responsibility for NFPA 654 was transferred to the Technical Committee on Fundamentals of Dust Explosion Prevention and Control. The committee prepared a complete revision for the 1982 edition, the scope of which was expanded to include chemical, dye, and pharmaceutical dusts, since the fire and explosion hazards of those dusts are generally the same as for plastic dusts.

In 1988, the committee voted to reconfirm the text as it appeared in the 1982 version, with minor editorial corrections and changes in accordance with the NFPA *Manual of Style*.

In 1994, the standard was revised to improve its usability, adoptability, and enforceability; to update outdated terminology; and to add the NFPA language for equivalency and retroactivity. In addition, the Technical Committee on Fundamentals of Dust Explosion Prevention and Control added new technologies for explosion prevention to NFPA 69, *Standard on Explosion Prevention Systems*. The committee also clarified the requirements relating to controlling hazardous accumulations of process dust.

The 1997 edition was a complete revision that incorporated new processing and explosion protection technologies. The title of the document was revised to reflect that the standard encompassed all industries not otherwise included in previous editions of the standard, including the fibers industry. The complete revision incorporated new requirements for design basis of systems and design details for management of change.

A complete revision for the 2000 edition incorporated portions of NFPA 650, *Standard for Pneumatic Conveying Systems for Handling Combustible Particulate Solids*, which was withdrawn in 2000. NFPA 654 retained its title and provided a unified approach for protecting facilities that handled most combustible particulate solids. The combination of documents eliminated the redundancy that previously had existed between the two, similar standards. The 2000 edition of NFPA 654 included specific requirements related to fire protection in addition to the existing explosion protection requirements.

The 2006 edition incorporated a complete revision, which introduced a performance-based approach for protecting combustible particulate solids processing facilities. This approach enabled users of the standard to follow the traditional prescriptive method or, for unique situations, allowed the option of a performance-based design. Other changes included updating the standard to the current *Manual of Style for NFPA Technical Committee Documents* format.

NFPA and National Fire Protection Association are registered trademarks of the National Fire Protection Association, Quincy, Massachusetts 02169.

Copyright 2014 National Fire Protection Association (NFPA). Licensed, by agreement, for individual use and download on October 4, 2014 to LEADER and READER for designated user PATTARAPORN SRITRAKOOL. No other reproduction or transmission in any form permitted without written permission of NFPA. For inquires or to report unauthorized use, contact licensing@nfpa.org.



The 2013 edition incorporates updates to definitions to coordinate with extracted text from the source documents in accordance with the *Manual of Style for NFPA Technical Committee Documents*. The most important change is the inclusion of four methods to determine whether a dust fire or explosion hazardous condition exists in a facility. The methods include those based on mass accumulation and risk evaluation as well as the layer depth criterion, which was described in the 2006 edition. Each of the methods is viewed as equivalent in establishing that a hazardous condition exists for either fires or explosions, so the change offers options for users of the standard when determining this fundamental condition.

The standard includes changes to the housekeeping requirements in two aspects. One involves the determination of a dust hazardous condition and prompts a cleaning frequency based on the nature of the dust layer or dust mass. The second change establishes a hierarchy for cleaning methods: vacuuming first, followed by sweeping or water wash and then, if still necessary, blowing with compressed air, but only under controlled conditions. It is clearly recognized from the incidents reported over the past decade or more that housekeeping has not been adequate in all instances, so establishing a strategy for cleaning frequency based on accumulated dust will improve the practice. In some instances, improper housekeeping has contributed to incidents, so creating a preferred sequence for cleaning methods will increase safety as well.

Safety management elements are also strengthened in the standard, including hazard analysis, management of change, training, emergency procedures, incident investigations, and contractor/subcontractor safety. Incident investigations indicate that one or more of these elements are reported as contributing factors to various incidents, so including them in the standard aims to stress their importance in the overall safety culture at a facility.

Copyright 2014 National Fire Protection Association (NFPA). Licensed, by agreement, for individual use and download on October 4, 2014 to LEADER and READER for designated user PATTARAPORN SRITRAKOOL. No other reproduction or transmission in any form permitted without written permission of NFPA. For inquires or to report unauthorized use, contact licensing@nfpa.org.



## Technical Committee on Handling and Conveying of Dusts, Vapors, and Gases

**Walter L. Frank,** *Chair*
Frank Risk Solutions, Inc., DE [SE]

**Walter S. Beattie,** AXA Matrix Risk Consultants, Inc., PA [I]
**Brice Chastain,** Georgia-Pacific LLC, GA [U]
**John M. Cholin,** J. M. Cholin Consultants Inc., NJ [SE]
**Tony DiLucido,** Zurich Risk Engineering Services, PA [I]
**Vahid Ebadat,** Chilworth Technology Inc., NJ [SE]
**Henry L. Febo, Jr.,** FM Global, MA [I]
**Larry D. Floyd,** BASF/Ciba Specialty Chemicals Corporation, AL [U]
**Henry W. Garzia,** UTC/Kidde-Fenwal, Inc., MA [M]
**John E. Going,** Fike Corporation, MO [M]
**Stephen T. Greeson,** HSB Professional Loss Control, TX [I]
**Paul F. Hart,** XL Global Asset Protection Services, IL [I]
**Mark L. Holcomb,** Kimberly-Clark Corporation, WI [U]
**Jerry J. Jennett,** Georgia Gulf Sulfur Corporation, GA [U]
**David C. Kirby,** Baker Engineering & Risk Consultants, Inc., WV [SE]
**James F. Koch,** The Dow Chemical Company, MI [U]
Rep. American Chemistry Council
**Jack E. Osborn,** Airdusco, Inc., TN [M]
**Richard Pehrson,** Pehrson Fire PC, MN [E]
Rep. International Fire Marshals Association
**James L. Roberts,** Fluor Enterprises, Inc., SC [SE]
**Samuel A. Rodgers,** Honeywell, Inc., VA [U]
**Mark L. Runyon,** Marsh USA Inc., OR [I]
**Thomas C. Scherpa,** The DuPont Company, Inc., NH [U]
**Thomas J. Slavin,** Navistar Inc., IL [U]
Rep. American Foundry Society, Inc.
**Bill Stevenson,** CV Technology, Inc., FL [M]
**Jeffery W. Sutton,** Global Risk Consultants Corporation, MN [SE]
**Robert D. Taylor,** American Electric Power, IN [U]
Rep. PRB Coal Users' Group
**Tony L. Thomas,** Flamex, Inc., NC [M]
**Erdem A. Ural,** Loss Prevention Science & Technologies, Inc., MA [SE]
**Harold H. Weber, Jr.,** The Sulphur Institute, DC [U]
(VL to Document: 655)

### Alternates

**C. James Dahn,** Safety Consulting Engineers Inc., IL [SE]
(Alt. to V. Ebadat)
**Randall Dunlap,** Georgia Gulf Sulfur Corporation, GA [U]
(Alt. to J. J. Jennett)
**Robert L. Gravell,** E. I. duPont de Nemours & Company, Inc., NJ [U]
(Alt. to T. C. Scherpa)
**William C. Hilton,** Georgia-Pacific LLC, GA [U]
(Alt. to B. Chastain)
**Jason Krbec,** CV Technology, Inc., FL [M]
(Alt. to B. Stevenson)
**Bruce McLelland,** Fike Corporation, MO [M]
(Alt. to J. E. Going)
**Albert I. Ness,** The Dow Chemical Company, PA [M]
(Alt. to J. F. Koch)
**Philip J. Parsons,** Baker Engineering & Risk Consultants, Inc., TX [SE]
(Alt. to D. C. Kirby)
**Robert D. Shafto,** Zurich Insurance, MI [I]
(Alt. to T. DiLucido)

### Nonvoting

**Matthew I. Chibbaro,** U.S. Department of Labor, DC [E]
**William R. Hamilton,** U.S. Department of Labor, DC [E]
(Alt. to M. I. Chibbaro)
**Jason P. Reason,** Indiana Department of Labor/IOSHA, IN [E]
**Richard F. Schwab,** Basking Ridge, NJ [SE]
(Member Emeritus)
**Harry Verakis,** U.S. Department of Labor, WV [E]

**Guy R. Colonna,** NFPA Staff Liaison

*This list represents the membership at the time the Committee was balloted on the final text of this edition. Since that time, changes in the membership may have occurred. A key to classifications is found at the back of the document.*

NOTE: Membership on a committee shall not in and of itself constitute an endorsement of the Association or any document developed by the committee on which the member serves.

**Committee Scope:** This Committee shall have primary responsibility for documents on the prevention, control, and extinguishment of fires and explosions in the design, construction, installation, operation, and maintenance of facilities and systems processing or conveying flammable or combustible dusts, gases, vapors, and mists.

Copyright 2014 National Fire Protection Association (NFPA). Licensed, by agreement, for individual use and download on October 4, 2014 to LEADER and READER for designated user PATTARAPORN SRITRAKOOL. No other reproduction or transmission in any form permitted without written permission of NFPA. For inquires or to report unauthorized use, contact licensing@nfpa.org.



## Contents

**Chapter 1 Administration** ..... **654– 6**
1.1 Scope ..... **654– 6**
1.2 Purpose ..... **654– 6**
1.3 Goal ..... **654– 6**
1.4 Application ..... **654– 6**
1.5 Retroactivity ..... **654– 6**
1.6 Equivalency ..... **654– 6**

**Chapter 2 Referenced Publications** ..... **654– 7**
2.1 General ..... **654– 7**
2.2 NFPA Publications ..... **654– 7**
2.3 Other Publications ..... **654– 7**
2.4 References for Extracts in Mandatory Sections ..... **654– 8**

**Chapter 3 Definitions** ..... **654– 8**
3.1 General ..... **654– 8**
3.2 NFPA Official Definitions ..... **654– 8**
3.3 General Definitions ..... **654– 8**

**Chapter 4 General Requirements** ..... **654– 9**
4.1 Process and Facility Design ..... **654– 9**
4.2 Process Hazard Analysis ..... **654– 9**
4.3 Management of Change ..... **654–10**
4.4 Incident Investigation ..... **654–10**
4.5 Pneumatic Conveying, Dust Collection, and Centralized Vacuum Cleaning System Design ..... **654–10**
4.6 Objectives ..... **654–10**
4.7 Compliance Options ..... **654–10**

**Chapter 5 Performance-Based Design Option** ..... **654–10**
5.1 General Requirements ..... **654–10**
5.2 Performance Criteria ..... **654–11**
5.3 Design Scenarios ..... **654–11**
5.4 Evaluation of Proposed Design ..... **654–11**

**Chapter 6 Facility and Systems Design** ..... **654–12**
6.1 General ..... **654–12**
6.2 Segregation, Separation, or Detachment of Combustible Dust Handling and Processing Areas ..... **654–13**
6.3 Building Construction ..... **654–13**
6.4 Deflagration Venting ..... **654–14**
6.5 Electrical Equipment ..... **654–14**

**Chapter 7 Process Equipment** ..... **654–14**
7.1 General. ..... **654–14**
7.2 Bulk Storage Enclosures ..... **654–15**
7.3 Material Transfer System ..... **654–15**
7.4 Specific Requirements for Systems that Convey Metal Particulates ..... **654–16**
7.5 Systems That Convey Hybrid Mixtures ..... **654–16**
7.6 Duct Systems ..... **654–17**
7.7 Sight Glasses ..... **654–17**
7.8 Pressure Protection Systems ..... **654–17**
7.9 Material Feeding Devices ..... **654–17**
7.10 Bucket Elevators ..... **654–17**
7.11 Enclosed Conveyors ..... **654–18**
7.12 Air-Moving Devices (Fans and Blowers) ..... **654–18**
7.13 Air-Material Separators (Air Separation Devices) ..... **654–18**
7.14 Abort Gates/Abort Dampers ..... **654–20**
7.15 Size Reduction ..... **654–20**
7.16 Particle Size Separation ..... **654–20**
7.17 Mixers and Blenders ..... **654–20**
7.18 Dryers ..... **654–20**

**Chapter 8 Fugitive Dust Control and Housekeeping** ..... **654–20**
8.1 Fugitive Dust Control ..... **654–20**
8.2 Housekeeping ..... **654–21**

**Chapter 9 Ignition Sources** ..... **654–21**
9.1 Heat from Mechanical Sparks and Friction ..... **654–21**
9.2 Electrical Equipment ..... **654–22**
9.3 Static Electricity ..... **654–22**
9.4 Cartridge-Actuated Tools ..... **654–23**
9.5 Open Flames and Sparks ..... **654–23**
9.6 Process and Comfort Heating Systems ..... **654–23**
9.7 Hot Surfaces ..... **654–23**
9.8 Industrial Trucks ..... **654–23**

**Chapter 10 Fire Protection** ..... **654–23**
10.1 General ..... **654–23**
10.2 System Requirements ..... **654–24**
10.3 Fire Extinguishers ..... **654–24**
10.4 Hose, Standpipes, and Hydrants ..... **654–24**
10.5 Automatic Sprinklers ..... **654–24**
10.6 Spark/Ember Detection and Extinguishing Systems ..... **654–24**
10.7 Special Fire Protection Systems ..... **654–24**
10.8 Alarm Service ..... **654–25**
10.9 Impairments of Fire Protection and Explosion Prevention Systems ..... **654–25**

**Chapter 11 Training and Procedures** ..... **654–25**
11.1 Employee Training ..... **654–25**
11.2 Plan ..... **654–25**
11.3 Initial and Refresher Training ..... **654–25**
11.4 Certification ..... **654–25**
11.5 Contractors and Subcontractors ..... **654–25**

**Chapter 12 Inspection and Maintenance** ..... **654–25**
12.1 General Requirements ..... **654–25**
12.2 Specific Requirements ..... **654–26**

Copyright 2014 National Fire Protection Association (NFPA). Licensed, by agreement, for individual use and download on October 4, 2014 to LEADER and READER for designated user PATTARAPORN SRITRAKOOL. No other reproduction or transmission in any form permitted without written permission of NFPA. For inquires or to report unauthorized use, contact licensing@nfpa.org.



**Annex A Explanatory Material** ..... **654**–26

**Annex B Explosion Protection** ..... **654**–42

**Annex C Informational Primer on Spark Detection and Extinguishing Systems** ..... **654**–46

**Annex D Dust Layer Characterization and Precautions** ..... **654**–49

**Annex E Deflagration Propagation Isolation Methods** ..... **654**–53

**Annex F Use of Water as Extinguishing Agent for Combustible Particulate Solids** ..... **654**–54

**Annex G Informational References** ..... **654**–55

**Index** ..... **654**–56

Copyright 2014 National Fire Protection Association (NFPA). Licensed, by agreement, for individual use and download on October 4, 2014 to LEADER and READER for designated user PATTARAPORN SRITRAKOOL. No other reproduction or transmission in any form permitted without written permission of NFPA. For inquires or to report unauthorized use, contact licensing@nfpa.org.



**NFPA 654**

**Standard for the**

# Prevention of Fire and Dust Explosions from the Manufacturing, Processing, and Handling of Combustible Particulate Solids

**2013 Edition**

***IMPORTANT NOTE: This NFPA document is made available for use subject to important notices and legal disclaimers. These notices and disclaimers appear in all publications containing this document and may be found under the heading "Important Notices and Disclaimers Concerning NFPA Documents." They can also be obtained on request from NFPA or viewed at www.nfpa.org/disclaimers.***

NOTICE: An asterisk (*) following the number or letter designating a paragraph indicates that explanatory material on the paragraph can be found in Annex A.

A reference in brackets [ ] following a section or paragraph indicates material that has been extracted from another NFPA document. As an aid to the user, the complete title and edition of the source documents for extracts in mandatory sections of the document are given in Chapter 2 and those for extracts in informational sections are given in Annex G. Extracted text may be edited for consistency and style and may include the revision of internal paragraph references and other references as appropriate. Requests for interpretations or revisions of extracted text shall be sent to the technical committee responsible for the source document.

Changes other than editorial are indicated by a vertical rule beside the paragraph, table, or figure in which the change occurred. These rules are included as an aid to the user in identifying changes from the previous edition. Where one or more complete paragraphs have been deleted, the deletion is indicated by a bullet (•) between the paragraphs that remain.

Information on referenced publications can be found in Chapter 2 and Annex G.

## Chapter 1 Administration

### 1.1* Scope.

**1.1.1** This standard shall apply to all phases of the manufacturing, processing, blending, conveying, repackaging, and handling of combustible particulate solids or hybrid mixtures, regardless of concentration or particle size, where the materials present a fire or explosion hazard.

**1.1.2** The owner/operator shall be responsible for implementing the requirements in this standard.

**1.2 Purpose.** The purpose of this standard is to prescribe technical requirements for safety to life and property from fire and explosion and to minimize the resulting damage from a fire or explosion.

**1.3 Goal.** The goal of this standard is to provide safety measures to prevent and mitigate fires and dust explosions in facilities that handle combustible particulate solids.

### 1.4 Application.

**1.4.1** This standard shall not apply to materials covered by the following documents, unless specifically referenced by the applicable document:

(1) NFPA 30B, *Code for the Manufacture and Storage of Aerosol Products*
(2) NFPA 33, *Standard for Spray Application Using Flammable or Combustible Materials*
(3) NFPA 61, *Standard for the Prevention of Fires and Dust Explosions in Agricultural and Food Processing Facilities*
(4) NFPA 85, *Boiler and Combustion Systems Hazards Code*
(5) NFPA 120, *Standard for Fire Prevention and Control in Coal Mines*
(6) NFPA 400, *Hazardous Materials Code*
(7) NFPA 484, *Standard for Combustible Metals*
(8) NFPA 495, *Explosive Materials Code*
(9) NFPA 655, *Standard for Prevention of Sulfur Fires and Explosions*
(10) NFPA 664, *Standard for the Prevention of Fires and Explosions in Wood Processing and Woodworking Facilities*
(11) NFPA 1124, *Code for the Manufacture, Transportation, Storage, and Retail Sales of Fireworks and Pyrotechnic Articles*
(12) NFPA 1125, *Code for the Manufacture of Model Rocket and High Power Rocket Motors*

**1.4.2** In the event of a conflict between this standard and a specific occupancy standard, the specific occupancy standard requirements shall apply.

**1.5 Retroactivity.** The provisions of this standard reflect a consensus of what is necessary to provide an acceptable degree of protection from the hazards addressed in this standard at the time the standard was issued.

**1.5.1** Unless otherwise specified, the provisions of this standard shall not apply to facilities, equipment, structures, or installations that existed or were approved for construction or installation prior to the effective date of the standard. Where specified, the provisions of this standard shall be retroactive.

**1.5.2** In those cases where the authority having jurisdiction determines that the existing situation presents an unacceptable degree of risk, the authority having jurisdiction shall be permitted to apply retroactively any portions of this standard deemed appropriate.

**1.5.3** The retroactive requirements of this standard shall be permitted to be modified if their application clearly would be impractical in the judgment of the authority having jurisdiction, and only where it is clearly evident that a reasonable degree of safety is provided.

**1.5.4** This standard shall apply to facilities on which construction is begun subsequent to the date of publication of the standard.

**1.5.5** When major replacement or renovation of existing facilities is planned, provisions of this standard shall apply.

**1.6 Equivalency.** Nothing in this standard is intended to prevent the use of systems, methods, or devices of equivalent or superior quality, strength, fire resistance, effectiveness, durability, and safety over those prescribed by this standard.

**1.6.1** Technical documentation shall be submitted to the authority having jurisdiction to demonstrate equivalency.

**1.6.2** The system, method, or device shall be approved for the intended purpose by the authority having jurisdiction.

Copyright 2014 National Fire Protection Association (NFPA). Licensed, by agreement, for individual use and download on October 4, 2014 to LEADER and READER for designated user PATTARAPORN SRITRAKOOL. No other reproduction or transmission in any form permitted without written permission of NFPA. For inquires or to report unauthorized use, contact licensing@nfpa.org.



## Chapter 2 Referenced Publications

**2.1 General.** The documents or portions thereof listed in this chapter are referenced within this standard and shall be considered part of the requirements of this document.

**2.2 NFPA Publications.** National Fire Protection Association, 1 Batterymarch Park, Quincy, MA 02169-7471.

NFPA 10, *Standard for Portable Fire Extinguishers,* 2010 edition.

NFPA 11, *Standard for Low-, Medium-, and High-Expansion Foam,* 2010 edition.

NFPA 12, *Standard on Carbon Dioxide Extinguishing Systems,* 2011 edition.

NFPA 12A, *Standard on Halon 1301 Fire Extinguishing Systems,* 2009 edition.

NFPA 13, *Standard for the Installation of Sprinkler Systems,* 2013 edition.

NFPA 14, *Standard for the Installation of Standpipe and Hose Systems,* 2010 edition.

NFPA 15, *Standard for Water Spray Fixed Systems for Fire Protection,* 2012 edition.

NFPA 16, *Standard for the Installation of Foam-Water Sprinkler and Foam-Water Spray Systems,* 2011 edition.

NFPA 17, *Standard for Dry Chemical Extinguishing Systems,* 2009 edition.

NFPA 25, *Standard for the Inspection, Testing, and Maintenance of Water-Based Fire Protection Systems,* 2011 edition.

NFPA 30B, *Code for the Manufacture and Storage of Aerosol Products,* 2011 edition.

NFPA 33, *Standard for Spray Application Using Flammable or Combustible Materials,* 2011 edition.

NFPA 51B, *Standard for Fire Prevention During Welding, Cutting, and Other Hot Work,* 2009 edition.

NFPA 61, *Standard for the Prevention of Fires and Dust Explosions in Agricultural and Food Processing Facilities,* 2013 edition.

NFPA 68, *Standard on Explosion Protection by Deflagration Venting,* 2007 edition.

NFPA 69, *Standard on Explosion Prevention Systems,* 2008 edition.

*NFPA 70®, National Electrical Code®,* 2011 edition.

*NFPA 72®, National Fire Alarm and Signaling Code,* 2013 edition.

NFPA 80, *Standard for Fire Doors and Other Opening Protectives,* 2013 edition.

NFPA 85, *Boiler and Combustion Systems Hazards Code,* 2011 edition.

NFPA 86, *Standard for Ovens and Furnaces,* 2011 edition.

NFPA 91, *Standard for Exhaust Systems for Air Conveying of Vapors, Gases, Mists, and Noncombustible Particulate Solids,* 2010 edition.

NFPA *101®, Life Safety Code®,* 2012 edition.

NFPA 120, *Standard for Fire Prevention and Control in Coal Mines,* 2010 edition.

NFPA 220, *Standard on Types of Building Construction,* 2012 edition.

NFPA 221, *Standard for High Challenge Fire Walls, Fire Walls, and Fire Barrier Walls,* 2012 edition.

NFPA 400, *Hazardous Materials Code,* 2013 edition.

NFPA 484, *Standard for Combustible Metals,* 2012 edition.

NFPA 495, *Explosive Materials Code,* 2010 edition.

NFPA 496, *Standard for Purged and Pressurized Enclosures for Electrical Equipment,* 2008 edition.

NFPA 505, *Fire Safety Standard for Powered Industrial Trucks Including Type Designations, Areas of Use, Conversions, Maintenance, and Operations,* 2011 edition.

NFPA 655, *Standard for Prevention of Sulfur Fires and Explosions,* 2012 edition.

NFPA 664, *Standard for the Prevention of Fires and Explosions in Wood Processing and Woodworking Facilities,* 2012 edition.

NFPA 750, *Standard on Water Mist Fire Protection Systems,* 2010 edition.

NFPA 780, *Standard for the Installation of Lightning Protection Systems,* 2011 edition.

NFPA 1124, *Code for the Manufacture, Transportation, Storage, and Retail Sales of Fireworks and Pyrotechnic Articles,* 2013 edition.

NFPA 1125, *Code for the Manufacture of Model Rocket and High Power Rocket Motors,* 2012 edition.

NFPA 2001, *Standard on Clean Agent Fire Extinguishing Systems,* 2012 edition.

NFPA 2113, *Standard on Selection, Care, Use, and Maintenance of Flame-Resistant Garments for Protection of Industrial Personnel Against Flash Fire,* 2012 edition.

**2.3 Other Publications.**

**2.3.1 AMCA Publications.** Air Movement and Control Association International, Inc., 30 West University Drive, Arlington Heights, IL 60004-1893.

AMCA 99-0401-86, *Classifications for Spark Resistant Construction,* 2010.

**2.3.2 ASME Publications.** American Society of Mechanical Engineers, Three Park Avenue, New York, NY 10016-5990.

ASME B31.3, *Process Piping,* 2008.

*ASME Boiler and Pressure Vessel Code,* 2007.

**2.3.3 ASTM Publications.** ASTM International, 100 Barr Harbor Drive, P.O. Box C700, West Conshohocken, PA 19428-2959.

ASTM E 2019, *Standard Test Method for Minimum Ignition Energy of a Dust Cloud in Air,* 2003 (2007).

ASTM E 1226, *Standard Test Method for Explosibility of Dust Clouds,* 2010

**2.3.4 IEC Publications.** International Electrotechnical Commission, 3, rue de Varembé, P.O. Box 131, CH-1211 Geneva 20, Switzerland.

IEC 61340-4-4, *Electrostatics — Part 4-4: Standard Test Methods for Specific Applications — Electrostatic Classification of Flexible Intermediate Bulk Containers (FIBC),* 2005.

**2.3.5 ISA Publications.** Instrumentation, Systems, and Automation Society, P.O. Box 12277, Research Triangle Park, NC 27709.

ISA 84.00.01, *Functional Safety: Application of Safety Instrumented Systems for the Process Industry Sector,* 2004.

**2.3.6 NEMA Publications.** National Electrical Manufacturers Association, 1300 North 17th Street, Suite 1847, Rosslyn, VA 22209.

NEMA 250, *Enclosures for Electrical Equipment,* 2008.

**2.3.7 U.S. Government Publications.** U.S. Government Printing Office, Washington, DC 20402.

Title 29 CFR Part 1910.242(b), "Hand and Portable Powered Tools and Equipment, General."

**2.3.8 Other Publications.**

*Merriam-Webster's Collegiate Dictionary,* 11th edition, Merriam-Webster, Inc., Springfield, MA, 2003.

Copyright 2014 National Fire Protection Association (NFPA). Licensed, by agreement, for individual use and download on October 4, 2014 to LEADER and READER for designated user PATTARAPORN SRITRAKOOL. No other reproduction or transmission in any form permitted without written permission of NFPA. For inquires or to report unauthorized use, contact licensing@nfpa.org.



**2.4 References for Extracts in Mandatory Sections.**

NFPA 68, *Standard on Explosion Protection by Deflagration Venting,* 2007 edition.

NFPA 221, *Standard for High Challenge Fire Walls, Fire Walls, and Fire Barrier Walls,* 2012 edition.

NFPA 484, *Standard for Combustible Metals,* 2012 edition.

NFPA 921, *Guide for Fire and Explosion Investigations,* 2011 edition.

## Chapter 3 Definitions

**3.1 General.** The definitions contained in this chapter shall apply to the terms used in this standard. Where terms are not defined in this chapter or within another chapter, they shall be defined using their ordinarily accepted meanings within the context in which they are used. *Merriam-Webster's Collegiate Dictionary,* 11th edition, shall be the source for the ordinarily accepted meaning.

**3.2 NFPA Official Definitions.**

**3.2.1* Approved.** Acceptable to the authority having jurisdiction.

**3.2.2* Authority Having Jurisdiction (AHJ).** An organization, office, or individual responsible for enforcing the requirements of a code or standard, or for approving equipment, materials, an installation, or a procedure.

**3.2.3 Labeled.** Equipment or materials to which has been attached a label, symbol, or other identifying mark of an organization that is acceptable to the authority having jurisdiction and concerned with product evaluation, that maintains periodic inspection of production of labeled equipment or materials, and by whose labeling the manufacturer indicates compliance with appropriate standards or performance in a specified manner.

**3.2.4* Listed.** Equipment, materials, or services included in a list published by an organization that is acceptable to the authority having jurisdiction and concerned with evaluation of products or services, that maintains periodic inspection of production of listed equipment or materials or periodic evaluation of services, and whose listing states that either the equipment, material, or service meets appropriate designated standards or has been tested and found suitable for a specified purpose.

**3.2.5 Shall.** Indicates a mandatory requirement.

**3.2.6 Should.** Indicates a recommendation or that which is advised but not required.

**3.2.7 Standard.** A document, the main text of which contains only mandatory provisions using the word "shall" to indicate requirements and which is in a form generally suitable for mandatory reference by another standard or code or for adoption into law. Nonmandatory provisions are not to be considered a part of the requirements of a standard and shall be located in an appendix, annex, footnote, informational note, or other means as permitted in the *Manual of Style for NFPA Technical Committee Documents.*

**3.3 General Definitions.**

**3.3.1 Abort Gate/Abort Damper.** A device for the quick diversion of material or air to the exterior of a building or other safe location in the event of a fire.

**3.3.2* Air-Material Separator (AMS).** A device designed to separate the conveying air from the material being conveyed.

**3.3.3* Air-Moving Device (AMD).** A power-driven fan, blower, or other device that establishes an airflow by moving a given volume of air per unit time.

**3.3.4* Centralized Vacuum Cleaning System.** A fixed-pipe system utilizing variable-volume negative-pressure (i.e., vacuum) air flows from remotely located hose connection stations to allow the removal of dust accumulations from surfaces and conveying those dusts to an air-material separator (AMS).

**3.3.5* Combustible Dust.** A finely divided combustible particulate solid that presents a flash fire hazard or explosion hazard when suspended in air or the process-specific oxidizing medium over a range of concentrations.

**3.3.6* Combustible Particulate Solid.** Any solid material composed of distinct particles or pieces, regardless of size, shape, or chemical composition that presents a fire hazard.

**3.3.7 Compartmentation.** The interposing of a physical barrier that is not required to be fire or explosion resistant in order to limit combustible particulate solid migration and hence to control the size of a hazard area.

**3.3.8* Deflagration.** Propagation of a combustion zone at a velocity that is less than the speed of sound in the unreacted medium. [**68,** 2007]

**3.3.9 Deflagration Hazard Area.**

**3.3.9.1* *Dust Explosion Hazard Area.*** A room or building volume where an unvented deflagration of the entrainable dust mass can result in a pressure exceeding the strength of the weakest structural element not intended to fail.

**3.3.9.2* *Dust Flash Fire Hazard Area.*** An area where combustible dust accumulation on exposed or concealed surfaces, external to equipment or containers, can result in personnel injury from thermal dose during a dust deflagration, as well as any areas where a dust cloud of a hazardous concentration exists.

**3.3.10 Detachment.** Locating a combustible particulate solid process in the open air or in a separate building.

**3.3.11 Dryer.** A piece of processing equipment using temperature or pressure change to reduce the moisture or volatile content of the material being handled.

**3.3.12* Dust Collection System.** A combination of equipment designed to capture, contain, pneumatically convey, collect, and remove airborne dusts from the airstream.

**3.3.13 Enclosureless Dust Collector.** An air-material separator designed and used to remove dust from the transport air where the filter medium is not enclosed or in a container.

**3.3.14 Explosion.** The bursting or rupture of an enclosure or a container due to the development of internal pressure from a deflagration.

**3.3.15* Flash Fire.** A fire that spreads by means of a flame front rapidly through a diffuse fuel, such as dust, gas, or the vapors of an ignitible liquid, without the production of damaging pressure. [**921,** 2011]

**3.3.16* Hybrid Mixture.** A mixture of a flammable gas at greater than 10 percent of its lower flammable limit with either a combustible dust or a combustible mist. [**68,** 2007]

Copyright 2014 National Fire Protection Association (NFPA). Licensed, by agreement, for individual use and download on October 4, 2014 to LEADER and READER for designated user PATTARAPORN SRITRAKOOL. No other reproduction or transmission in any form permitted without written permission of NFPA. For inquires or to report unauthorized use, contact licensing@nfpa.org.



**3.3.17 Intermediate Bulk Containers.**

**3.3.17.1*** ***Flexible Intermediate Bulk Container (FIBC).*** Large bags typically made from nonconductive woven fabric that are used for storage and handling of bulk solids.

**3.3.17.1.1** ***Type A FIBC.*** An FIBC made from nonconductive fabric with no special design features for control of electrostatic discharge hazards.

**3.3.17.1.2** ***Type B FIBC.*** An FIBC made from nonconductive fabric where the fabric or the combination of the fabric shell, coating, and any loose liner has a breakdown voltage of less than 6000 volts.

**3.3.17.1.3** ***Type C FIBC.*** An FIBC made from conductive material or nonconductive woven fabric incorporating interconnected conductive threads of specified spacing with all conductive components connected to a grounding tab.

**3.3.17.1.4** ***Type D FIBC.*** An FIBC made from fabric and/or threads with special static properties designed to control electrostatic discharge energy without a requirement for grounding the FIBC.

**3.3.17.2*** ***Rigid Intermediate Bulk Container (RIBC).*** An intermediate bulk container (IBC) that can be enclosed in or encased by an outer structure consisting of a steel cage, a single-wall metal or plastic enclosure, or a double wall of foamed or solid plastic.

**3.3.17.2.1** ***Insulating RIBC.*** An RIBC constructed entirely of solid plastic or solid plastic and foam composite that cannot be electrically grounded.

**3.3.18* Lower Flammable Limit (LFL).** The lowest concentration of material that will propagate a flame from an ignition source through a mixture of flammable gas or combustible dust dispersion with a gaseous oxidizer.

**3.3.19* Minimum Explosible Concentration (MEC).** The minimum concentration of a combustible dust suspended in air, measured in mass per unit volume, that will support a deflagration.

**3.3.20* Minimum Ignition Energy (MIE).** The lowest capacitive spark energy capable of igniting the most ignition-sensitive concentration of a flammable vapor-air mixture or a combustible dust-air mixture as determined by a standard test procedure.

**3.3.21* Noncombustible Material.** A material that, in the form in which it is used and under the conditions anticipated, will not ignite, support combustion, burn, or release flammable vapors when subjected to fire or heat.

**3.3.22 Owner/Operator.** The organization with fiscal responsibility for the operation, maintenance, and profitability of the facility.

**3.3.23* Pneumatic Conveying System.** An equipment system that comprises a material feeding device; an enclosed ductwork, piping, or tubing network; an air-material separator; and an air-moving device and that is used to transfer a controlled flow of solid particulate material from one location to another using air or other gases as the conveying medium.

**3.3.23.1** ***Negative-Pressure Pneumatic Conveying System.*** A pneumatic conveying system that transports material by utilizing gas at less than atmospheric pressure.

**3.3.23.2** ***Positive-Pressure Pneumatic Conveying System.*** A pneumatic conveying system that transports material by utilizing gas at greater than atmospheric pressure.

**3.3.24 Replacement-in-Kind.** A replacement that satisfies the design specifications. [**484,** 2012]

**3.3.25 Segregation.** The interposing of a fire- and explosion-resistant barrier between the combustible particulate solid process and other operations.

**3.3.26 Separation.** The interposing of distance between the combustible particulate solid process and other operations that are in the same room.

**3.3.27 Spark.** A moving particle of solid material that emits radiant energy due to either its temperature or the process of combustion on its surface.

**3.3.28 Vent Closure.** A pressure-relieving cover that is placed over a vent. [**68,** 2007]

**3.3.29 Vented Explosion Pressure ($P_{red}$).** The maximum pressure developed in a vented enclosure during a vented deflagration.

**3.3.30 Wall.**

**3.3.30.1** ***Fire Barrier Wall.*** A wall, other than a fire wall, having a fire resistance rating. [**221,** 2012]

**3.3.30.2** ***Fire Wall.*** A wall separating buildings or subdividing a building to prevent the spread of fire and having a fire resistance rating and structural stability. [**221,** 2012]

**3.3.31* Water-Compatible.** A material that is neither reactive with water nor incompatible with water and that, consequently, can be extinguished with a water-based extinguishing system.

**3.3.32* Water-Incompatible.** A material that does not chemically react with water, but which undergoes a change of phase or state upon mixture with water that renders it permanently changed or incompatible with the remainder of the process.

**3.3.33* Water-Reactive.** A material that chemically reacts with water, producing another compound that can represent a different set of fire protection concerns.

## Chapter 4 General Requirements

**4.1 Process and Facility Design.**

**4.1.1** The design of processes and facilities that handle combustible particulate solids shall consider the physical and chemical properties that establish the hazardous characteristics of the materials.

**4.1.2*** The design and its basis shall be documented and maintained for the life of the process.

**4.2 Process Hazard Analysis.**

**4.2.1*** The design of the fire and explosion safety provisions shall be based on a process hazard analysis of the facility, the process, and the associated fire or explosion hazards.

**4.2.2** The results of the process hazard analysis shall be documented and maintained for the life of the process.

**4.2.3** If the process, equipment, or operation does not prevent accumulation of dust external to equipment at all times, then the process hazard analysis shall specify and document

Copyright 2014 National Fire Protection Association (NFPA). Licensed, by agreement, for individual use and download on October 4, 2014 to LEADER and READER for designated user PATTARAPORN SRITRAKOOL. No other reproduction or transmission in any form permitted without written permission of NFPA. For inquires or to report unauthorized use, contact licensing@nfpa.org.



maximum allowable layer thickness (or area density), maximum allowable deposit surface area, and minimum personal protective equipment (PPE) requirements. (See Chapter 6 for dust layer thickness requirements.)

**4.2.4** The process hazard analysis shall be reviewed and updated at least every 5 years.

**4.3 Management of Change.** Written procedures to manage change to process materials, technology, equipment, procedures, and facilities shall be established and implemented.

**4.3.1** The requirements of 4.3.1.1 through 4.3.1.3 shall be applied retroactively.

**4.3.1.1** The management-of-change procedures shall ensure that the following issues are addressed prior to any change:

(1) The technical basis for the proposed change
(2) The safety and health implications
(3) Whether the change is permanent or temporary
(4) Modifications to operating and maintenance procedures
(5) Employee training requirements
(6) Authorization requirements for the proposed change

**4.3.1.2** Implementation of the management-of-change procedures shall not be required for replacements-in-kind.

**4.3.1.3** Design documentation, as required by 4.1.2, shall be updated to incorporate the change.

**4.4 Incident Investigation.**

**4.4.1*** Incidents that result in a fire or explosion of a magnitude that causes property damage, production shutdown time, or injury shall be investigated.

**4.4.2** Once the scene has been released by the authority having jurisdiction, incident investigations shall be promptly initiated by management personnel or by a designee who has a working knowledge of the facility and processes.

**4.4.3*** A written report of the investigation shall be prepared that describes the incident, lists what has been learned from the investigation, and makes recommendations to prevent recurrence of that or similar incidents.

**4.4.4*** A summary of the incident investigation report shall be shared with affected personnel operating, maintaining, and supervising the facility.

**4.5* Pneumatic Conveying, Dust Collection, and Centralized Vacuum Cleaning System Design.** Systems that handle combustible particulate solids shall be designed by and installed under the supervision of qualified engineers who are knowledgeable about these systems and their associated hazards.

**4.6 Objectives.**

**4.6.1 Life Safety.**

**4.6.1.1** The facility, combustible particulate processes, and human element programs shall be designed, constructed, equipped, and maintained to protect occupants not in the immediate proximity of the ignition from the effects of fire, deflagration, and explosion for the time needed to evacuate, relocate, or take refuge.

**4.6.1.2** The structure shall be located, designed, constructed, and maintained to minimize the propagation of fire or explosion to adjacent properties and to avoid injury to the public.

**4.6.2 Structural Integrity.** The facility shall be designed, constructed, and equipped to maintain its structural integrity in spite of the effects of fire or explosion for the time necessary to evacuate, relocate, or defend in place occupants not in the immediate proximity of the ignition.

**4.6.3* Mission Continuity.** The facility, processes and equipment, and human element program shall be designed, constructed, equipped, and maintained to limit damage to levels that ensure the ongoing mission, production, or operating capability of the facility to a degree acceptable to the owner/operator.

**4.6.4 Mitigation of Fire Spread and Explosions.** The facility and processes shall be designed to prevent fires and explosions that can cause failure of adjacent compartments, emergency life safety systems, adjacent properties, adjacent storage, or the facility's structural elements.

**4.6.4.1*** The structure shall be designed, constructed, and maintained to prevent fire or explosions from causing failure of load-bearing structural members, propagating into adjacent interior compartments, and incapacitating fire protective and emergency life safety systems in adjacent compartments.

**4.6.4.2** The structure shall be located, designed, constructed, equipped, and maintained to prevent the propagation of fire or explosion to or from adjacent storage or structures.

**4.7* Compliance Options.** The goal in Section 1.3 and the objectives in Section 4.6 shall be achieved by either of the following means:

(1) The prescriptive provisions in accordance with Chapters 6 through 12 of this standard
(2) The performance-based provisions in accordance with Chapters 5, 8, 9, 11, and 12 of this standard

## Chapter 5 Performance-Based Design Option

**5.1 General Requirements.**

**5.1.1 Approved Qualifications.** The performance-based design shall be prepared by a person with qualifications acceptable to the owner/operator.

**5.1.2 Independent Review.** The authority having jurisdiction shall be permitted to obtain an independent third party review of the proposed design.

**5.1.3*** Performance-based designs shall be documented with all calculations, references, assumptions, and sources from which material characteristics and other data have been obtained or on which the designer has relied for some material aspect of the design per Chapter 5 of NFPA *101*, *Life Safety Code*.

**5.1.3.1** A sensitivity analysis shall be performed for each assumption that is not provided in an authoritative reference acceptable to the authority having jurisdiction to show that variation of said assumption does not result in a failure to meet design criteria.

**5.1.3.2** The source of all calculation methods and models shall be documented with their limits of applicability.

**5.1.4*** Performance-based designs and documentation shall be updated and subject to re-approval if any of the assumptions on which the original design was based are changed.

**5.1.5 Sources of Data.**

**5.1.5.1** Data sources shall be identified and documented for each input data requirement that must be met using a source

Copyright 2014 National Fire Protection Association (NFPA). Licensed, by agreement, for individual use and download on October 4, 2014 to LEADER and READER for designated user PATTARAPORN SRITRAKOOL. No other reproduction or transmission in any form permitted without written permission of NFPA. For inquires or to report unauthorized use, contact licensing@nfpa.org.



other than a design fire scenario, an assumption, or a building design specification.

**5.1.5.2** The degree of conservatism reflected in such data shall be specified, and a justification for the sources shall be provided.

**5.2 Performance Criteria.** A system and facility design shall be deemed to meet the objectives specified in Section 4.6 if its performance meets the criteria in 5.2.1 through 5.2.5.

**5.2.1 Occupant Life Safety.**

**5.2.1.1** The life safety objectives of 4.6.1 with respect to a fire hazard shall be achieved if either of the following criteria is met:

(1) Ignition has been prevented.
(2) Under all fire scenarios, no person, other than those in the immediate proximity of the ignition, is exposed to untenable conditions due to the fire, and no critical structural element of the building is damaged to the extent that it can no longer support its design load during the period of time necessary to effect complete evacuation of the occupants.

**5.2.1.2** The life safety objectives of 4.6.1 with respect to a explosion hazard shall be achieved if either of the following criteria is met:

(1) Ignition has been prevented.
(2) Under all explosion scenarios, no person, other than those in the immediate proximity of the ignition, is exposed to untenable conditions, including missile impact or overpressure, due to the occurrence of an explosion, and no critical structural element of the building is damaged to the extent that it can no longer support its design load during the period of time necessary to effect complete evacuation of the occupants.

**5.2.2 Structural Integrity.** The structural integrity objective of 4.6.2 with respect to fire and explosion shall be achieved when no critical structural element of the building is damaged to the extent that it can no longer support its design load under all fire and explosion scenarios.

**5.2.3 Mission Continuity.** The mission continuity objectives of 4.6.3 shall be achieved when damage to equipment and the facility has been limited to a level of damage acceptable to the owner/operator.

**5.2.4 Mitigation of Fire Spread and Explosions.** When limitation of fire spread is to be achieved, all of the following criteria shall be demonstrated:

(1) Adjacent combustibles shall not attain their ignition temperature.
(2) Building design and housekeeping shall prevent combustibles from accumulating exterior to the enclosed process system to a concentration that is capable of supporting propagation.
(3) Particulate processing systems shall prevent fire or explosion from propagating from one process system to an adjacent process system or to the building interior.

**5.2.5 Effects of Explosions.** Where the prevention of damage due to explosion is to be achieved, deflagrations shall not produce any of the following conditions:

(1) Internal pressures in the room or equipment sufficient to threaten its structural integrity
(2) Extension of the flame front outside the compartment or equipment of origin except where intentionally vented to a safe location
(3)*Rupture of the compartment or equipment of origin and the ejection of fragments that can constitute missile hazards

**5.3* Design Scenarios.**

**5.3.1 Fire Scenarios.**

**5.3.1.1** Each fuel object in the compartment shall be considered for inclusion as a fire scenario.

**5.3.1.2** The fuel object that produces the most rapidly developing fire during startup, normal operating conditions, or shutdown shall be included as a fire scenario.

**5.3.1.3** The fuel object that produces the most rapidly developing fire under conditions of a production upset or single equipment failure shall be included as a fire scenario.

**5.3.1.4** The fuel object that produces the greatest total heat release during startup, normal operating conditions, or shutdown shall be included as a fire scenario.

**5.3.1.5** The fuel object that produces the greatest total heat release under conditions of a production upset or single equipment failure shall be included as a fire scenario.

**5.3.1.6** The fuel object that can produce a deep-seated fire during startup, normal operating conditions, or shutdown shall be included as a fire scenario.

**5.3.1.7** The fuel object that can produce a deep-seated fire under conditions of a production upset or single equipment failure shall be included as a fire scenario.

**5.3.2 Explosion Scenarios.**

**5.3.2.1** Each duct, enclosed conveyor, silo, bunker, air-material separator, or other vessel containing a combustible dust in sufficient quantity or conditions to support the propagation of a flame front during startup, normal operating conditions, or shutdown shall be included as an explosion scenario.

**5.3.2.2** Each duct, enclosed conveyor, silo, bunker, air-material separator, or other vessel containing a combustible dust in sufficient quantity or conditions to support the propagation of a flame front under conditions of production upset or single equipment failure shall be included as an explosion scenario.

**5.3.2.3** Each building or building compartment containing a combustible dust in sufficient quantity or conditions to support the propagation of a flame front during startup, normal operating conditions, or shutdown shall be included as an explosion scenario.

**5.3.2.4** Each building or building compartment containing a combustible dust in sufficient quantity or conditions to support the propagation of a flame front under conditions of production upset or single equipment failure shall be included as an explosion scenario.

**5.4 Evaluation of Proposed Design.**

**5.4.1* General.** A proposed design's performance shall be assessed relative to each performance objective in Section 4.6 and each applicable scenario in Section 5.3, with the assessment conducted through the use of appropriate calculation methods acceptable to the authority having jurisdiction.

Copyright 2014 National Fire Protection Association (NFPA). Licensed, by agreement, for individual use and download on October 4, 2014 to LEADER and READER for designated user PATTARAPORN SRITRAKOOL. No other reproduction or transmission in any form permitted without written permission of NFPA. For inquires or to report unauthorized use, contact licensing@nfpa.org.



**5.4.2** The design professional shall establish numerical performance criteria for each of the objectives in Section 4.6.

**5.4.3** The design professional shall use the assessment methods to demonstrate that the proposed design will achieve the goals and objectives, as measured by the performance criteria in light of the safety margins and uncertainty analysis, for each scenario, given the assumptions.

## Chapter 6 Facility and Systems Design

**6.1 General.** The facility and process shall be designed and operated in accordance with this chapter.

**6.1.1 Hazard Assessment.** The facility and process equipment shall be evaluated for dust flash fire and dust explosion hazards in accordance with this chapter.

**6.1.1.1** Those portions of the process and facility interior where dust accumulations exist external to equipment in sufficient depth to prevent discerning the underlying surface color shall be evaluated to determine if a dust explosion hazard or flash fire hazard exists.

**6.1.1.2** Areas where dust clouds of a hazardous concentration exist shall be deemed to be dust flash fire and dust explosion hazard areas.

**6.1.1.3*** Dust flash fire or dust explosion hazard areas shall additionally be determined in accordance with any one of the following four methods:

(1) Layer depth criterion method in 6.1.3
(2) Mass method A in 6.1.4
(3) Mass method B in 6.1.5
(4) Risk evaluation method in 6.1.6

**6.1.1.4** Each of the methods in 6.1.3, 6.1.4, 6.1.5, and 6.1.6 shall be deemed to provide equivalent levels of safety.

**6.1.1.5*** It shall be permitted to determine the accumulated mass and bulk density on a dry weight basis by drying the sample to less than or equal to 5 percent moisture by weight.

**6.1.1.6** Dust accumulations are deemed nonseparated unless segregation, separation, or detachment is used to limit the hazard area in accordance with Section 6.2.

**6.1.1.7** All dust accumulated on structures above the lowest footprint shall be evaluated as if accumulated on the lowest footprint.

**6.1.1.8** Dust accumulation amounts shall reflect the conditions that exist just prior to routinely scheduled cleaning and shall not include short-term accumulations cleaned in accordance with Chapter 8.

**6.1.1.9** The process equipment shall be assessed in accordance with 6.1.7.

**6.1.1.10** Personnel exposed to a dust flash fire hazard shall be protected in accordance with 11.2.2.

**6.1.2** Those portions of the facility and process where a dust explosion hazard or flash fire hazard exists shall be protected from the effects of those hazards in accordance with this section as well as Sections 6.2, 6.3, and 6.4 and Chapter 7.

**6.1.3* Layer Depth Criterion Method.** A dust flash fire or dust explosion hazard area exists when the dust layer thickness measured external to process equipment exceeds the quantity determined in 6.1.3.1 or 6.1.3.2.

**6.1.3.1** The layer depth criterion, which is 1/32 in. (0.8 mm), shall be permitted to be increased according to the following equation for materials with bulk density less than 75 lb/ft$^3$ (1200 kg/m$^3$):

$$LD\ (\text{in.}) = \frac{\left(\frac{1}{32}\text{in.}\right)\left(75\frac{\text{lb}}{\text{ft}^3}\right)}{BD}$$

where:
$LD$ = layer depth (in.)
$BD$ = Bulk density (lb/ft$^3$)

**6.1.3.2*** A dust explosion hazard and dust flash fire hazard shall be deemed to exist in any building or room where any of the following conditions exists:

(1) The total area of nonseparated dust accumulations exceeding the layer depth criterion is greater than 5 percent of the footprint area
(2) The area of any single nonseparated dust accumulation exceeding the layer depth criterion is greater than 1000 ft$^2$ (92.9 m$^2$)
(3) The total volume of nonseparated dust accumulations is greater than the layer depth criterion multiplied by 5 percent of the footprint area
(4) The total volume of any single nonseparated dust accumulation is greater than the layer depth criterion multiplied by 1000 ft$^2$ (92.9 m$^2$)

**6.1.4* Mass Method A.** A dust flash fire or dust explosion hazard area exists when the total accumulated dust external to process equipment exceeds the quantities determined from the equations in 6.1.4.1 and 6.1.4.2.

**6.1.4.1** The threshold dust mass establishing a building or room as a dust explosion hazard area, $M_{basic\text{-}exp}$, shall be determined by the following equation:

$$M_{basic\text{-}exp} = 0.004 \cdot A_{floor} \cdot H$$

where:
$M_{basic\text{-}exp}$ = threshold dust mass (kg) based on building damage criterion
$A_{floor}$ = lesser of enclosure floor area (m$^2$) or 2000 m$^2$
$H$ = lesser of enclosure ceiling height (m) or 12 m

**6.1.4.2** The threshold dust mass establishing a building or room as a dust flash fire hazard area, $M_{basic\text{-}fire}$, shall be determined by the following equation:.

$$M_{basic\text{-}fire} = 0.02 \cdot A_{floor}$$

where:
$M_{basic\text{-}fire}$ = threshold dust mass (kg) based on personnel fire exposure criterion
$A_{floor}$ = lesser of enclosure floor area (m$^2$) or 2000 m$^2$
$H$ = lesser of enclosure ceiling height (m) or 12 m

**6.1.5* Mass Method B.** A dust flash fire or dust explosion hazard area exists when the total accumulated dust external to process equipment exceeds the quantities determined from the equations in 6.1.5.1 and 6.1.5.2.

**6.1.5.1*** The threshold dust mass establishing a building or room as a dust explosion hazard area, $M_{exp}$, shall be determined by the following equation:

Copyright 2014 National Fire Protection Association (NFPA). Licensed, by agreement, for individual use and download on October 4, 2014 to LEADER and READER for designated user PATTARAPORN SRITRAKOOL. No other reproduction or transmission in any form permitted without written permission of NFPA. For inquires or to report unauthorized use, contact licensing@nfpa.org.



$$M_{exp} = \left[\frac{P_{es}}{DLF}\right] \cdot \left[\frac{C_w}{P_{max}}\right] \cdot \frac{A_{floor} \cdot H}{\eta_D}$$

where:

$M_{exp}$ = threshold dust mass (kg) based on building damage criterion,
$P_{es}$ = enclosure strength evaluated based on static pressure calculations for the weakest building structural element not intended to vent or fail (bar g) per NFPA 68
$DLF$ = dynamic load factor, the ratio of maximum dynamic deflection to static deflection per NFPA 68
$C_w$ = worst-case dust concentration (kg/m$^3$) at which the maximum rate-of-pressure-rise results in tests conducted per ASTM E 1226
$P_{max}$ = maximum pressure (bar g) developed in ASTM E 1226 tests with the accumulated dust sample
$A_{floor}$ = enclosure floor area (m$^2$)
$H$ = enclosure ceiling height (m)
$\eta_D$ = entrainment fraction = 0.25

**6.1.5.1.1** In the absence of detailed structural response analysis, it shall be permitted to assume a worst-case value of $DLF$= 1.5 and design based on the weakest structural element of the enclosure.

**6.1.5.1.2*** It shall be permitted to use an alternative value of $\eta_D$ based on a risk evaluation that is acceptable to the authority having jurisdiction.

**6.1.5.2*** The threshold dust mass establishing a building or room as a dust flash fire hazard area, $M_{fire}$, shall be determined by the following equation:

$$M_{fire} = \rho \cdot C_w \cdot \left[\frac{P_{initial}}{P_{initial} + P_{max}}\right] \cdot \frac{A_{floor} \cdot D}{\eta_D}$$

where:

$M_{fire}$ = threshold dust mass (kg) based on personnel fire exposure criterion
$\rho$ = probability of flame impingement on a person, not to exceed 0.05 (5 percent probability)
$C_w$ = worst-case dust concentration (kg/m$^3$) at which the maximum rate-of-pressure-rise results in tests conducted per ASTM E 1226
$P_{initial}$ = 1 bar absolute
$P_{max}$ = maximum pressure (bar g) developed in ASTM E 1226 tests with the accumulated dust sample
$A_{floor}$ = enclosure floor area (m$^2$)
$D$ = nominal height of a person (2 m)
$\eta_D$ = entrainment fraction = 0.25

**6.1.5.2.1*** It shall be permitted to use an alternative value of $\eta_D$, based on a risk evaluation that is acceptable to the authority having jurisdiction.

**6.1.6* Risk Evaluation Method.** A documented risk evaluation acceptable to the AHJ shall be permitted to be conducted to determine whether or where a dust explosion hazard or dust flash fire hazard area exists.

**6.1.7** An explosion hazard shall be deemed to exist in enclosed process equipment where both of the following conditions are possible:

(1) Combustible dust is present in sufficient quantity to cause enclosure rupture if suspended and ignited.
(2) A means of suspending the dust is present.

**6.2 Segregation, Separation, or Detachment of Combustible Dust Handling and Processing Areas.**

**6.2.1 General.** Areas in which combustible dusts are produced, processed, handled, or collected such that combustible dust accumulation on exposed or concealed surfaces, external to equipment or containers, exceeds the threshold as determined in Section 6.1, shall be detached, segregated, or separated from other occupancies to minimize damage from a fire or explosion.

**6.2.2 Use of Segregation.**

**6.2.2.1** Physical barriers that are erected to segregate dust flash fire hazards areas, including seals at all penetrations of floors, walls, ceilings, or partitions shall have a 1-hour fire resistance rating.

**6.2.2.2** Physical barriers that are erected to segregate dust explosion hazard areas shall be designed to preclude failure of those barriers during a dust explosion per NFPA 68, *Standard on Explosion Protection by Deflagration Venting.*

**6.2.2.3** Doors and openings shall not be permitted in physical barriers unless they are normally closed and have at least the strength and fire resistance rating required of the physical barrier.

**6.2.3 Use of Separation.**

**6.2.3.1*** Separation shall be permitted to be used to limit the dust explosion hazard or dust flash fire hazard area where supported by a documented engineering evaluation acceptable to the authority having jurisdiction.

**6.2.3.1.1** The required separation distance between the dust explosion hazard or flash fire hazard area identified in Section 6.1 and surrounding exposures shall be determined by an engineering evaluation that addresses the following:

(1) Properties of the materials
(2) Type of operation
(3) Amount of material likely to be present external to process equipment
(4) Building and equipment design
(5) Nature of surrounding exposures

**6.2.3.1.2** The separation area either shall be free of dust or, where dust accumulations exist on any surface, the surface colors below shall be readily discernible.

**6.2.3.1.3** Where separation is used to limit the dust flash fire or dust explosion hazard area determined in Section 6.1, the minimum separation distance shall not be less than 35 ft (11 m), consistent with NFPA 51B, *Standard for Fire Prevention During Welding, Cutting, and Other Hot Work.*

**6.2.3.2*** Where separation is used, housekeeping, fixed dust collection systems employed at points of release, and compartmentation shall be permitted to be used to limit the extent of the dust explosion hazard or flash fire hazard area.

**6.2.3.3** Where separation is used to limit a dust explosion hazard or dust flash fire hazard area, dust thresholds in Section 6.1 shall be determined for this limited area such that the parameter $A_{floor}$ in the equations in Section 6.1 is consistent with the limited area under consideration.

**6.3 Building Construction.**

**6.3.1** All buildings shall be of Type I or Type II construction, as defined in NFPA 220, *Standard on Types of Building Construction.*

Copyright 2014 National Fire Protection Association (NFPA). Licensed, by agreement, for individual use and download on October 4, 2014 to LEADER and READER for designated user PATTARAPORN SRITRAKOOL. No other reproduction or transmission in any form permitted without written permission of NFPA. For inquires or to report unauthorized use, contact licensing@nfpa.org.



**6.3.2** Where local, state, or national building codes are more restrictive, modifications shall be permitted for conformance to those codes.

**6.3.3*** Interior surfaces where dust accumulations can occur shall be designed and constructed so as to facilitate cleaning and to minimize combustible dust accumulations.

**6.3.4** Spaces inaccessible to housekeeping shall be sealed to prevent dust accumulation.

**6.3.5** Interior walls erected for the purpose of limiting fire spread shall have a minimum 1-hour fire resistance rating and shall be designed in accordance with NFPA 221, *Standard for High Challenge Fire Walls, Fire Walls, and Fire Barrier Walls.*

**6.3.6 Fire Doors.**

**6.3.6.1** Openings in fire walls and in fire barrier walls shall be protected by self-closing fire doors that have a fire resistance rating equivalent to the wall design.

**6.3.6.2** Fire doors shall be installed according to NFPA 80, *Standard for Fire Doors and Other Opening Protectives*, and shall normally be in the closed position.

**6.3.7 Egress.** Means of egress shall comply with NFPA *101*, *Life Safety Code.*

**6.3.8 Penetrations.** Where floors, walls, ceilings, and other partitions have been erected to control the spread of fire or deflagrations, penetrations in these structures shall be sealed to maintain their fire endurance rating and maintain physical integrity in a deflagration. *(See 7.6.7.)*

**6.3.9 Fire Resistance Rating.**

**6.3.9.1** Interior stairs, elevators, and manlifts shall be enclosed in dusttight shafts that have a minimum fire resistance rating of 1 hour.

**6.3.9.2** Doors that are the automatic-closing or self-closing type and have a fire resistance rating of 1 hour shall be provided at each landing.

**6.3.9.3** Stairs, elevators, and manlifts that serve only open-deck floors, mezzanines, and platforms shall not be required to be enclosed.

**6.3.10*** Floors and load-bearing walls that are exposed to dust explosion hazards shall be designed to preclude failure during an explosion.

**6.4* Deflagration Venting.**

**6.4.1*** If a room or building contains a dust explosion hazard as specified in 6.2.3.1 that is external to protected equipment, such areas shall be provided with deflagration venting to a safe outside location.

**6.4.2* Vent Closures.**

**6.4.2.1** Vent closures shall be directed toward a restricted area.

**6.4.2.2** The vent closure shall not be a missile hazard.

**6.4.2.3** The fireball and the blast pressure that are created by the venting process shall not impinge on unrestricted personnel pathways.

**6.5 Electrical Equipment.**

**6.5.1** All electrical equipment and installations shall comply with the requirements of *NFPA 70, National Electrical Code*, or NFPA 496, *Standard for Purged and Pressurized Enclosures for Electrical Equipment.*

**6.5.2*** In local areas of a plant where a hazardous quantity of dust accumulates or is suspended in air, the area shall be classified and all electrical equipment and installations in those local areas shall comply with Article 502 or Article 503 of *NFPA 70, National Electrical Code*, as applicable.

**6.5.3** Hazardous (classified) areas that are identified in accordance with 6.5.2 shall be documented, and such documentation shall be permanently maintained on file for the life of the facility.

## Chapter 7 Process Equipment

**7.1* General.**

**7.1.1** Equipment shall be maintained and operated in a manner that minimizes the escape of dust.

**7.1.2** Methods of fire and explosion protection for specific equipment shall be in accordance with this section.

**7.1.3* Risk Evaluation.** A documented risk evaluation acceptable to the authority having jurisdiction shall be permitted to be conducted to determine the level of protection to be provided per this chapter.

**7.1.4 Explosion Protection for Equipment.**

**7.1.4.1** The design of explosion protection for equipment shall incorporate one or more of the following methods of protection:

(1) Oxidant concentration reduction in accordance with NFPA 69, *Standard on Explosion Prevention Systems*
   (a) Where oxygen monitoring is used, it shall be installed in accordance with ISA 84.00.01, *Functional Safety*: *Application of Safety Instrumented Systems for the Process Industry Sector.*
   (b)*Where the chemical properties of the material being conveyed require a minimum concentration of oxygen to control pyrophoricity, that level of concentration shall be maintained.

(2)*Deflagration venting in accordance with NFPA 68, *Standard on Explosion Protection by Deflagration Venting*

(3) Deflagration pressure containment in accordance with NFPA 69, *Standard on Explosion Prevention Systems*

(4) Deflagration suppression systems in accordance with NFPA 69, *Standard on Explosion Prevention Systems*

(5)*Dilution with a noncombustible dust to render the mixture noncombustible *(See 7.1.4.2.)*

(6)*Deflagration venting through a listed dust retention and flame-arresting device

**7.1.4.2** If the method in 7.1.4.1(5) is used, test data for specific dust and diluent combinations shall be provided and shall be acceptable to the authority having jurisdiction.

**7.1.5 Fire Protection for Equipment.** Equipment fire protection shall be designed in accordance with Chapter 10.

**7.1.6* Isolation of Equipment.**

**7.1.6.1** Where an explosion hazard exists, isolation devices shall be provided to prevent deflagration propagation between connected equipment in accordance with NFPA 69, *Standard on Explosion Prevention Systems.*

Copyright 2014 National Fire Protection Association (NFPA). Licensed, by agreement, for individual use and download on October 4, 2014 to LEADER and READER for designated user PATTARAPORN SRITRAKOOL. No other reproduction or transmission in any form permitted without written permission of NFPA. For inquires or to report unauthorized use, contact licensing@nfpa.org.



**7.1.6.2** The requirement of 7.1.6.1 shall not apply where all of the following conditions are met:

(1) The material being conveyed is not a metal dust or hybrid mixture.
(2) The connecting ductwork is smaller than 4 in. (100 mm) nominal diameter.
(3) The maximum concentration of dust conveyed through the duct is less than 25 percent of the minimum explosive concentration (MEC) of the material.
(4) The conveying velocity is sufficient to prevent accumulation of combustible dust in the duct.
(5) All connected equipment is properly designed for explosion protection by means other than deflagration pressure containment.

**7.1.6.3** Isolation devices shall not be required where oxidant concentration has been reduced or where the dust has been rendered noncombustible in accordance with 7.1.4.1(1) or 7.1.4.1(5).

**7.1.7* Isolation of Upstream Work Areas.** Where an explosion hazard exists, isolation devices shall be provided to prevent deflagration propagation from equipment through upstream ductwork to the work areas in accordance with NFPA 69, *Standard on Explosion Prevention Systems*.

**7.1.8*** Systems for the pre-deflagration detection and control of ignition sources, installed in accordance with NFPA 69, *Standard on Explosion Prevention Systems*, shall be permitted to be used to reduce the probability of occurrence of a deflagration in the following:

(1) In ductwork supplying air-material separators
(2) In recycled air from air-material separators to a building
(3) In ductwork between process equipment

**7.1.9 Fire Protection for Facility.** Where a fire propagation hazard exists, the requirements of Chapter 10 shall apply.

**7.2 Bulk Storage Enclosures.**

**7.2.1 General.**

**7.2.1.1** For the purposes of this section, bulk storage shall include items such as bins, tanks, hoppers, and silos.

**7.2.1.2*** The requirements of this section shall not apply to containers that are used for transportation of the material.

**7.2.2 Construction.** Bulk storage containers, whether located inside or outside of buildings, shall be constructed so as not to represent an increase in the fire load beyond the capabilities of the existing fire protection.

**7.2.3 Explosion Hazards.**

**7.2.3.1** Where an explosion hazard exists, intertank or interbin venting shall not be permitted.

**7.2.3.2 Fixed Bulk Storage Location.**

**7.2.3.2.1** Where an explosion hazard exists, fixed bulk storage containers shall be located outside of buildings.

**7.2.3.2.2** Fixed bulk storage containers shall be permitted to be located inside buildings where one of the following applies:

(1) Fixed bulk storage containers are protected in accordance with 7.1.4.
(2)*Fixed bulk storage containers are less than 8 $ft^3$ (0.2 $m^3$).

**7.2.3.3 Fixed Bulk Storage Protection.**

**7.2.3.3.1** Where an explosion hazard exists, fixed bulk storage containers shall be protected in accordance with 7.1.4.

**7.2.3.3.2*** The explosion protection requirements of 7.1.4 shall not be required provided that the volume of the fixed bulk storage container is less than 8 $ft^3$ (0.2 $m^3$).

**7.2.3.3.3** The requirements of 7.2.3.3 shall not apply to storage and receiving containers that are used for transportation of the material.

**7.2.4* Interior Surfaces.** Interior surfaces shall be designed and constructed to facilitate cleaning and to minimize combustible dust accumulation.

**7.2.5* Access Doors and Openings.**

**7.2.5.1** Access doors or openings shall be provided to allow inspection, cleaning, and maintenance.

**7.2.5.2** Access doors or openings shall be designed to prevent dust leaks.

**7.2.5.3** Access doors or openings that are not specifically designed for deflagration venting shall not be considered as providing that function.

**7.2.5.4** Access doors shall be bonded and grounded.

**7.2.5.5** Access doors not designed to be used as deflagration vents shall be designed to withstand the vented explosion pressure ($P_{red}$).

**7.3 Material Transfer System.**

**7.3.1 General.**

**7.3.1.1*** Where more than one material is to be handled by a system, compatibility tests shall be run.

**7.3.1.2** Where incompatibility is found, provisions shall be made for cleaning the system prior to transporting a new material.

**7.3.1.3** Where the materials being conveyed are corrosive, the system shall be constructed of corrosion-resistant materials.

**7.3.1.4** Where the atmosphere surrounding the conveying system is corrosive, the conveying system shall be constructed of corrosion-resistant materials.

**7.3.2* Pneumatic Conveying, Dust Collection, and Centralized Vacuum Cleaning Systems.**

**7.3.2.1** The design of the system shall be documented, and the documentation shall include the following information:

(1) Data on the range of particulate size
(2) Concentration of combustible dust in the conveyance air stream
(3) Potential for reaction between the transported particulates and the extinguishing media used to protect process equipment
(4) Conductivity of the particulates
(5) Other physical and chemical properties that could affect the fire protection of the process

**7.3.2.2*** Existing systems shall not be modified without considering the effects of those changes on the system performance, including the redesign of the system to incorporate the proposed changes.

Copyright 2014 National Fire Protection Association (NFPA). Licensed, by agreement, for individual use and download on October 4, 2014 to LEADER and READER for designated user PATTARAPORN SRITRAKOOL. No other reproduction or transmission in any form permitted without written permission of NFPA. For inquires or to report unauthorized use, contact licensing@nfpa.org.



**7.3.2.3** All system components that handle combustible particulate solids shall be designed to be dusttight, except for openings designed for intake and discharge of air and material.

**7.3.2.4*** The system shall be designed and maintained to ensure that the air/gas velocity during operation shall at all times meet or exceed the minimum required to keep the interior surfaces of all piping free of particulate accumulations.

**7.3.2.5* Pneumatic Conveying Systems.** Where a pneumatic conveying system operates at a gauge pressure of 15 psi (103 kPa) or greater, the components exposed to that pressure under normal or upset conditions shall be designed in accordance with Section VIII of the *ASME Boiler and Pressure Vessel Code* or ASME B31.3, *Process Piping*.

**7.3.2.5.1*** Where a pneumatic conveying system or any part of such systems operates as a positive-pressure-type system and the air-moving device's gauge discharge pressure is 15 psi (103 kPa) or greater, the system shall be designed in accordance with Section VIII of the *ASME Boiler and Pressure Vessel Code* or ASME B31.3, *Process Piping*.

**7.3.2.5.2** All components of pneumatic conveying systems that handle combustible particulate solids shall be designed to be dusttight, except for openings designed for intake and discharge of air and material.

**7.3.2.6 Dust Collection Systems.**

**7.3.2.6.1*** At each collection point, the system shall be designed to achieve the minimum required face velocity for dust capture over the entire opening of the hood or pickup point.

**7.3.2.6.2*** The volumetric flow rate for each collection point shall be included in the system design documentation.

**7.3.2.6.3*** The rate of airflow at each hood or pickup point for each dust source shall be designed so as to convey and control the collected dust.

**7.3.2.6.4*** Branch lines shall not be disconnected and unused portions of the system shall not be blanked off without providing a means to maintain required and balanced airflow.

**7.3.2.6.5*** Branch lines shall not be added to an existing system without reviewing the design of the entire system.

**7.3.2.6.6*** All ductwork shall be sized to provide the air volume and air velocity necessary to keep the duct interior clean and free of residual material.

**7.3.2.6.7** Dust collection systems that remove material from operations that generate flames, sparks, or hot material shall not be interconnected with dust collection systems that transport combustible particulate solids or hybrid mixtures.

**7.3.2.6.8*** Heating, ventilation, and air conditioning (HVAC) systems shall not be used as the means to collect dusts from localized sources.

**7.3.2.7* Centralized Vacuum Cleaning Systems.**

**7.3.2.7.1*** The system shall be designed to ensure minimum transport velocities at all times.

**7.3.2.7.2*** The system shall be operated only with the hoses and tools that have been designated in the design documentation for the specific hose connection station.

**7.3.2.7.3*** Vacuum hose, couplings, and tools shall be made of conductive or static-dissipative materials that are bonded and grounded in accordance with 9.3.2.3.

**7.3.2.7.4*** Controls shall be provided to prevent overfilling the air-material separator (AMS), which could disable the system.

**7.3.2.7.5** The maximum number of hose connection stations that can be simultaneously used shall be included in the system documentation.

**7.3.3* Operations.**

**7.3.3.1 Sequence of Operation.** Pneumatic conveying, dust collection, and centralized vacuum cleaning systems shall be designed with the operating logic, sequencing, and timing outlined in 7.3.3.2 and 7.3.3.3.

**7.3.3.2* Startup.** Pneumatic conveying, dust collection, and centralized vacuum cleaning systems shall be designed such that, on startup, the system achieves and maintains design air velocity prior to the admission of material to the system.

**7.3.3.3 Shutdown.**

**7.3.3.3.1** Pneumatic conveying, dust collection, and centralized vacuum cleaning systems shall be designed such that, on normal shutdown of the process, the system maintains design air velocity until material is purged from the system.

**7.3.3.3.2** The requirements of 7.3.3.3.1 shall not apply during emergency shutdown of the process, such as by activation of an emergency stop button or by activation of an automatic safety interlocking device.

**7.3.3.3.3** Dilute phase pneumatic conveying systems shall be designed such that, upon restart after an emergency shutdown, residual materials can be cleared and design air velocity can be achieved prior to admission of new material to the system.

**7.4 Specific Requirements for Systems that Convey Metal Particulates.**

**7.4.1 General.** This section shall apply to facilities that operate pneumatic conveying, dust collection, and centralized vacuum cleaning systems for metal particulates.

**7.4.2** Systems handling metal particulates shall be designed in accordance with NFPA 484, *Standard for Combustible Metals*, in addition to the requirements of this section.

**7.4.3* Water Reactivity.**

**7.4.3.1** Unless otherwise determined, metal particulates shall be deemed water-reactive, and water-based extinguishing agents shall not be used.

**7.4.3.2** Specially engineered high-density water spray systems approved by the authority having jurisdiction shall be permitted to be used.

**7.4.3.3** The requirement of 7.4.3.1 shall not apply to the collection of iron dusts from shot blasting.

**7.4.4** Systems that convey alloys that exhibit fire or explosion characteristics similar to those of the base metal shall be provided with the same protection as systems that convey the base metal.

**7.4.5 Iron, Nickel, Copper, and Other Transition Metal Particulates.** Transition metal combustible particulates shall be classified as water-compatible, water-incompatible, or water-reactive based on the available chemical and physical data and in conjunction with the authority having jurisdiction.

**7.5 Systems That Convey Hybrid Mixtures.** The percentage of the lower flammable limit (LFL) of flammable vapors and the percentage of the minimum explosible concentration (MEC)

Copyright 2014 National Fire Protection Association (NFPA). Licensed, by agreement, for individual use and download on October 4, 2014 to LEADER and READER for designated user PATTARAPORN SRITRAKOOL. No other reproduction or transmission in any form permitted without written permission of NFPA. For inquires or to report unauthorized use, contact licensing@nfpa.org.



of combustible dusts, when combined, shall not exceed 25 percent within the airstream, except for systems protected in accordance with 7.1.4.1(1) through 7.1.4.1(4).

**7.6 Duct Systems.**

**7.6.1** Ducts that handle combustible particulate solids shall conform to the requirements of NFPA 91, *Standard for Exhaust Systems for Air Conveying of Vapors, Gases, Mists, and Noncombustible Particulate Solids*, except as amended by the requirements of this chapter.

**7.6.2** Ductwork shall be constructed of metal or noncombustible, conductive material in accordance with 9.3.2.

**7.6.3*** Where flexible hose is used to connect conductive components, the resistance between the conductive components shall be less than $1 \times 10^6$ ohms.

**7.6.4*** Flexible hose and connections shall be permitted to be used for material pickup and vibration isolation in accordance with 9.3.2.

**7.6.5** Bellows shall be permitted to be used for the free movement of weigh bins if the bellows are conductive and the equipment is bonded and grounded.

**7.6.6*** Changes in duct sizes shall be designed to prevent the accumulation of material by utilizing a tapered transformation piece with the included angle of the taper not more than 30 degrees.

**7.6.7*** When ducts pass through a physical barrier that is erected to segregate dust deflagration hazards, physical isolation protection shall be provided to prevent propagation of deflagrations between segregated spaces.

**7.7 Sight Glasses.**

**7.7.1** Sight glasses shall be of a material that is impact and erosion resistant.

**7.7.2** Sight glass assemblies shall have a pressure rating equal to or greater than that of the ductwork.

**7.7.3** Ductwork shall be supported on each side of the sight glass so that the sight glass does not carry any of the system weight and is not subject to stress or strain.

**7.7.4** The mechanical strength of the sight glass–mounting mechanism shall be equal to the adjoining ductwork.

**7.7.5** The inside diameter of a sight glass shall not cause a restriction of flow.

**7.7.6** The connections between the sight glass and the ductwork shall be squarely butted and sealed so as to be both airtight and dusttight.

**7.7.7** The electrical bonding across the length of the sight glass shall be continuous and have a resistance of no more than 1 ohm.

**7.8 Pressure Protection Systems.**

**7.8.1 Vacuum Breakers.** Vacuum breakers shall be installed on negative-pressure systems if the pressure system is not designed for the maximum vacuum attainable.

**7.8.2* Pressure Relief Devices.**

**7.8.2.1** Pressure relief devices for relief of pneumatic overpressure shall be installed on positive-pressure systems.

**7.8.2.2** The requirement of 7.8.2.1 shall not apply to systems that are designed for a gauge pressure of less than 15 psi (103 kPa) and are provided with safety interlocks designed to prevent overpressure in accordance with ISA 84.00.01, *Functional Safety: Application of Safety Instrumented Systems for the Process Industry Sector.*

**7.8.2.3** The requirement of 7.8.2.1 shall not apply to systems that are designed for a gauge pressure of less than 15 psi (103 kPa) and are capable of containing the maximum pressure attainable.

**7.8.2.4*** Pressure relief devices shall not be vented to an area where a dust explosion hazard or dust flash fire hazard exists, as specified by Section 6.1.

**7.8.3 Airflow Control Valves.**

**7.8.3.1** Airflow control valves that are installed in pneumatic conveying, dust collection, or centralized vacuum cleaning systems shall be of both airtight and dusttight construction.

**7.8.3.2** Airflow control valves shall be sized to allow passage of the total airflow of the system when the damper is fully open.

**7.8.3.3** The position of airflow control valves shall be visually indicated.

**7.8.3.4** Manually adjusted airflow control valves, dampers, gates, or orifice plates shall have a means of securing them to prevent subsequent adjustment or manipulation once the system is balanced.

**7.8.3.5** Diverter valves shall effect a positive diversion of the material and shall mechanically seal all other directions from air or material leakage.

**7.9 Material Feeding Devices.**

**7.9.1 Mechanical Feeding Devices.**

**7.9.1.1** Mechanical feeding devices shall be equipped with a shear pin or overload detection device and alarm.

**7.9.1.2** The alarm shall sound at the operator control station.

**7.9.2 Drives.**

**7.9.2.1** All drives used in conjunction with feeders, air locks, and other material feeding devices shall be directly connected.

**7.9.2.2** Belt, chain and sprocket, or other indirect drives that are designed to stall the driving forces without slipping and to provide for the removal of static electric charges shall be permitted to be used.

**7.10* Bucket Elevators.**

**7.10.1* Deflagration Protection.**

**7.10.1.1** Where an explosion hazard exists, bucket elevators shall be protected in accordance with 7.1.4.

**7.10.2** Elevator casings, head and boot sections, and connecting ducts shall be dusttight and shall be constructed of noncombustible materials.

**7.10.3** Where provided, inlet and discharge hoppers shall be designed to be accessible for cleaning and inspection.

**7.10.4 Power Cutoff.**

**7.10.4.1*** Belt-driven bucket elevators shall be provided with a detector that cuts off the power to the drive motor if the motor speed drops below 80 percent of normal operating speed.

Copyright 2014 National Fire Protection Association (NFPA). Licensed, by agreement, for individual use and download on October 4, 2014 to LEADER and READER for designated user PATTARAPORN SRITRAKOOL. No other reproduction or transmission in any form permitted without written permission of NFPA. For inquires or to report unauthorized use, contact licensing@nfpa.org.



**7.10.4.2** Feed to the elevator leg shall be stopped or diverted when the power to the motor is stopped.

**7.10.5 Belts.**

**7.10.5.1** Belt-driven bucket elevators shall have a nonslip material (lagging) installed on the head pulley to minimize slippage.

**7.10.5.2*** Belts and lagging shall be fire and oil resistant.

**7.10.6** No bearings shall be located in the bucket elevator casing.

**7.10.7*** Head and boot sections shall be provided with openings to allow for cleanout, inspection, and alignment of the pulley and belt.

**7.10.8 Drive.**

**7.10.8.1*** The bucket elevator shall be driven by a motor and drive train that is capable of handling the full-rated capacity of the elevator without overloading.

**7.10.8.2** The drive shall be capable of starting the unchoked elevator under full (100 percent) load.

**7.10.9 Monitors.**

**7.10.9.1** Elevators shall have monitors at head and tail pulleys that indicate high bearing temperature, vibration detection, head pulley alignment, and belt alignment.

**7.10.9.2** Abnormal conditions shall actuate an alarm requiring corrective action.

**7.10.9.3** The alarm shall sound at the operator control station.

**7.10.9.4** The requirement of 7.10.9.1 shall not apply to elevators that have belt speeds below 500 ft/min (150 m/min) or capacities less than 3750 $ft^3$/hr (106 $m^3$/hr).

**7.10.10 Emergency Controls.**

**7.10.10.1** All bins into which material is directly discharged from the bucket elevator and that are not designed with automatic overflow systems shall be equipped with devices to shut down equipment or with high-level indicating devices with visual or audible alarms.

**7.10.10.2** The audible alarm specified in 7.10.10.1 shall sound at the operator control station.

**7.11* Enclosed Conveyors.**

**7.11.1 Housing and Coverings.**

**7.11.1.1** Where an explosion hazard exists within enclosed conveyors, they shall be protected in accordance with 7.1.4.

**7.11.1.2** Housings for enclosed conveyors (e.g., screw conveyors and drag conveyors) shall be of metal construction and shall be designed so as to prevent escape of combustible dusts.

**7.11.1.3** Coverings on cleanout, inspection, and other openings shall be fastened to prevent the escape of combustible dusts.

**7.11.2 Power Shutoff.**

**7.11.2.1*** All conveyors shall be equipped with a device that shuts off the power to the drive motor and sounds an alarm in the event the conveyor plugs.

**7.11.2.2** The alarm shall sound at the operator control station, and feed to the conveyor shall be stopped or diverted.

**7.12 Air-Moving Devices (Fans and Blowers).**

**7.12.1** Air-moving devices shall conform to the requirements of NFPA 91, *Standard for Exhaust Systems for Air Conveying of Vapors, Gases, Mists, and Noncombustible Particulate Solids*, except as amended by the requirements of this chapter.

**7.12.2 Combustible Particulate Solids.**

**7.12.2.1*** Where an explosion hazard exists, systems shall be designed in such a manner that combustible particulate solids do not pass through an air-moving device.

**7.12.2.2*** The requirement of 7.12.2.1 shall not apply to systems designed to operate at a combustible particulate solids concentration or hybrid mixture concentration of less than 10 percent of the MEC or for a hybrid mixture, the lower of 10 percent of the MEC of the dust, or 10 percent of the LFL of the vapor.

**7.12.2.3*** The requirement of 7.12.2.1 shall not apply to systems protected by an approved explosion prevention or isolation system to prevent the propagation of the flame front from the fan to other equipment in accordance with 7.1.4.1(1), 7.1.4.1(4), 7.1.4.1(5), 7.1.6.1, or 7.1.6.2.

**7.12.2.4** Where the MEC value is unknown, a value of 0.03 oz/$ft^3$ (30 g/$m^3$) shall be permitted to be assumed.

**7.12.2.5*** Where an air-moving device is located in the dirty air stream and the dust/air stream concentration is higher than 10 percent of the MEC, fans and blowers shall be of Type A or Type B spark-resistant construction per AMCA 99-0401-86, *Classifications for Spark Resistant Construction*, or Type C spark-resistant construction protected with spark detection and extinguishment located downstream of the fan.

**7.12.3** Where a fire hazard exists and where combustible particulate solids pass through an air-moving device, provisions shall be made to prevent ignited material from entering processes downstream, in accordance with Chapter 10.

**7.13 Air-Material Separators (Air Separation Devices).**

**7.13.1 General.**

**7.13.1.1 Location.**

**7.13.1.1.1** Where an explosion hazard exists, air-material separators with a dirty-side volume of 8 $ft^3$ (0.2 $m^3$) or greater shall be located outside of buildings.

**7.13.1.1.2*** The requirement of 7.13.1.1.1 shall not apply to the following:

(1) Air-material separators that are protected in accordance with 7.1.4
(2) Air-material separators that have a dirty-side volume of less than 8 $ft^3$ (0.2 $m^3$)
(3) Wet air-material separators that meet all of the following criteria:
    (a) Interlocks are provided to shutdown the system if the flow rate of the scrubbing medium is less than the designed minimum flow rate.
    (b) The scrubbing medium is not a flammable or combustible liquid.
    (c) The separator is designed to prevent the formation of a combustible dust cloud within the air-material (AMS).
(4)* Enclosureless air-material separators meeting all the following criteria shall be permitted to be used:

Copyright 2014 National Fire Protection Association (NFPA). Licensed, by agreement, for individual use and download on October 4, 2014 to LEADER and READER for designated user PATTARAPORN SRITRAKOOL. No other reproduction or transmission in any form permitted without written permission of NFPA. For inquires or to report unauthorized use, contact licensing@nfpa.org.



(a) The filter medium is not shaken or pressure-pulsed to dislodge dust during operation.
(b) The AMS is not used to vent or serve metal grinders, hot work processes, or machinery that can produce sparks.
(c) The AMS is not used to vent or serve sanders, abrasive planers, or similar sanding process equipment.
(d)*Each collector system has a maximum air flow–handling capacity of 3000 cfm (1.4 $m^3$/sec).
(e) The fan motor is suitable for Class II, Division 2, or Class III, as appropriate.
(f) The collected dust is removed daily or more frequently if necessary to ensure efficient operation and to limit the collected dust to less than 22 lb (10 kg).
(g) The collector is located at least 20 ft (6.1 m) from any means of egress or area routinely occupied by personnel.
(h)*Multiple collectors in the same room are separated from each other by at least 20 ft (6.1 m).
(i)*The minimum ignition energy (MIE) of the collected materials is greater than 500 mJ.
(j) The fan construction is spark resistant and meets the criteria in 7.12.2.5.
(k) The filter medium is not located within 35 ft (10.7 m) of any open flame or hot surface capable of igniting a dust cloud of the material it contains.

**7.13.1.2 Protection.**

**7.13.1.2.1** Where both an explosion hazard and a fire hazard exist in an air-material separator, protection for each type of hazard shall be provided.

**7.13.1.2.2** Where an explosion hazard exists, air-material separators shall be protected in accordance with 7.1.4.

**7.13.1.2.3** Where a fire hazard exists, see Chapter 10.

**7.13.1.3 Manifolding of Dust Collection Ducts.**

**7.13.1.3.1** Manifolding of dust collection ducts to air-material separators shall not be permitted.

**7.13.1.3.2** Dust collection ducts from a single piece of equipment or from multiple pieces of equipment interconnected on the same process stream shall be permitted to be manifolded.

**7.13.1.3.3** Dust collection ducts from nonassociated pieces of equipment shall be permitted to be manifolded provided that each duct is equipped with an isolation device prior to manifolding in accordance with 7.1.6.

**7.13.1.3.4** Dust collection ducts for centralized vacuum cleaning systems shall be permitted to be manifolded.

**7.13.1.4*** Isolation devices shall be provided for air–material separators in accordance with 7.1.6.

**7.13.1.5** Where lightning protection is provided, it shall be installed in accordance with NFPA 780, *Standard for the Installation of Lightning Protection Systems.*

**7.13.1.6 Exhaust Air.**

**7.13.1.6.1** Exhaust air from the final air-material separator shall be discharged outside to a restricted area and away from air intakes.

**7.13.1.6.2** Air from air-material separators shall be permitted to be recirculated directly back to the pneumatic conveying system.

**7.13.1.6.3*** Recycling of air-material separator exhaust to buildings or rooms shall be permitted when all of the following requirements are met:

(1) Combustible or flammable gases or vapors are not present either in the intake or the recycled air in concentrations above applicable industrial hygiene exposure limits or 1 percent of the LFL, whichever is lower.
(2)*Combustible particulate solids are not present in the recycled air in concentrations above applicable industrial hygiene exposure limits or 1 percent of the MEC, whichever is lower.
(3)*The oxygen concentration of the recycled air stream is between 19.5 percent and 23.5 percent by volume.
(4) Provisions are incorporated to prevent transmission of flame and pressure effects from a deflagration in an air-material separator back to the facility unless a process hazard analysis indicates that those effects do not pose a threat to the facility or the occupants.
(5) Provisions are incorporated to prevent transmission of smoke and flame from a fire in an air-material separator back to the facility unless a process hazard analysis indicates that those effects do not pose a threat to the facility or the occupants.
(6) The system includes a method for detecting air-material separator malfunctions that would reduce collection efficiency and allow increases in the amount of combustible particulate solids returned to the building.
(7) The building or room to which the recycled air is returned meets the fugitive dust control and housekeeping requirements of this standard (Chapter 8).
(8) Recycled-air ducts are inspected and cleaned at least annually.

**7.13.1.7** Where more than one material is to be handled by a system and is known to be incompatible, provisions shall be made for cleaning the system prior to the handling of a new material.

**7.13.2 Construction.**

**7.13.2.1 Noncombustible Material.**

**7.13.2.1.1** Air-material separators shall be constructed of noncombustible materials.

**7.13.2.1.2** Filter media and filter media support frames shall be permitted to be constructed of combustible material.

**7.13.2.1.3** Portable containers intended to receive materials discharged from an air-material separator, where isolated from the air-material separator by a valve, shall be permitted to be constructed of combustible material.

**7.13.2.2 Maximum Material Flow.**

**7.13.2.2.1** Air-material separators shall be constructed to minimize internal ledges or other points of dust accumulation.

**7.13.2.2.2** Hopper bottoms shall be sloped, and the discharge conveying system shall be designed to handle the maximum material flow attainable from the system.

**7.13.2.3 Access Doors.**

**7.13.2.3.1** Access doors or openings shall be provided to permit inspection, cleaning, and maintenance.

**7.13.2.3.2** Access doors or openings shall be designed to prevent dust leaks.

Copyright 2014 National Fire Protection Association (NFPA). Licensed, by agreement, for individual use and download on October 4, 2014 to LEADER and READER for designated user PATTARAPORN SRITRAKOOL. No other reproduction or transmission in any form permitted without written permission of NFPA. For inquires or to report unauthorized use, contact licensing@nfpa.org.



**7.13.2.3.3** Access doors shall be permitted to be used as deflagration vents if they are specifically designed for both purposes.

**7.13.2.3.4** Access doors shall be bonded and grounded.

**7.13.2.3.5*** Access doors not designed to be used as deflagration vents shall be designed to withstand the vented explosion pressure ($P_{red}$).

**7.14* Abort Gates/Abort Dampers.**

**7.14.1 Construction.**

**7.14.1.1** Abort gates and abort dampers shall be constructed of noncombustible materials.

**7.14.1.2** Abort gates shall be actuated by spark detection in the duct or pipe upstream of the device.

**7.14.1.3*** The detection system and abort gate shall respond to prevent sparks, glowing embers, or burning materials from passing beyond the abort gate.

**7.14.2 Operation.**

**7.14.2.1** The abort gate or abort damper shall be installed so that it diverts airflow to a restricted area to safely discharge combustion gases, flames, burning solids, or process gases or fumes.

**7.14.2.2 Manual Reset.**

**7.14.2.2.1*** An abort gate or abort damper shall be provided with a manually activated reset located proximate to the device such that, subsequent to operation, it can be returned to the normal operating position only at the damper (gate).

**7.14.2.2.2** Automatic or remote reset provisions shall not be permitted.

**7.15* Size Reduction.**

**7.15.1** Before material is processed by size reduction equipment, foreign materials shall be excluded or removed as required by 9.1.2.

**7.15.2** Where an explosion hazard exists, protection shall be provided as specified in 7.1.4.

**7.15.3** Where a fire hazard exists, protection shall be provided in accordance with Chapter 10.

**7.16* Particle Size Separation.**

**7.16.1** Particle separation devices shall be in dusttight enclosures.

**7.16.2** Connection ducts shall be in conformance with Section 7.6.

**7.16.3* Explosion Protection.**

**7.16.3.1** Where an explosion hazard exists, protection shall be provided as specified in 7.1.4.

**7.16.3.2*** Screens and sieves shall not be required to have explosion protection.

**7.16.4** Where a fire hazard exists, protection shall be in accordance with Chapter 10.

**7.17 Mixers and Blenders.**

**7.17.1** Mixers and blenders shall be designed to control the release of dust.

**7.17.2** Foreign materials shall be excluded or removed as required by 9.1.2.

**7.17.3** Where an explosion hazard exists, protection shall be provided as specified in 7.1.4.

**7.17.4** Where a fire hazard exists, protection shall be in accordance with Chapter 10.

**7.17.5** Mixers and blenders shall be made of metal, other noncombustible material, or a material that does not represent an increased fire load beyond the capabilities of the existing fire protection.

**7.18* Dryers.**

**7.18.1** Heating systems shall be in accordance with Section 9.6.

**7.18.2 Drying Media.**

**7.18.2.1** Drying media that come into contact with material being processed shall not be recycled to rooms or buildings.

**7.18.2.2** Drying media shall be permitted to be recycled to the drying process provided the following conditions are met:

(1) The media passes through a filter, dust separator, or equivalent means of dust removal.
(2) The vapor flammability of the drying media in the dryer is controlled by either oxidant concentration reduction or combustible concentration reduction in accordance with NFPA 69, *Standard on Explosion Prevention Systems.*

**7.18.3** Dryers shall be constructed of noncombustible materials.

**7.18.4** Interior surfaces of dryers shall be designed so that accumulations of material are minimized and cleaning is facilitated.

**7.18.5** Access doors or openings shall be provided in all parts of the dryer and connecting conveyors to permit inspection, cleaning, maintenance, and the effective use of portable extinguishers or hose streams.

**7.18.6** Where an explosion hazard exists, protection shall be provided as specified in 7.1.4.

**7.18.7** Where a fire hazard exists, protection shall be in accordance with Chapter 10.

**7.18.8** Heated dryers shall comply with NFPA 86, *Standard for Ovens and Furnaces.*

**7.18.9*** Heated dryers shall have operating controls arranged to maintain the temperature of the drying chamber within the prescribed limits.

**7.18.10** Heated dryers and their auxiliary equipment shall be equipped with separate excess-temperature-limit controls, independent of the operating controls, that are arranged to supervise the following:

(1) Heated air supply to the drying chamber
(2) Airstream at the discharge of the drying chamber

## Chapter 8 Fugitive Dust Control and Housekeeping

**8.1 Fugitive Dust Control.**

**8.1.1** Continuous suction to minimize the escape of dust shall be provided for processes where combustible dust is liberated in normal operation.

**8.1.2** The dust shall be conveyed to air-material separators.

Copyright 2014 National Fire Protection Association (NFPA). Licensed, by agreement, for individual use and download on October 4, 2014 to LEADER and READER for designated user PATTARAPORN SRITRAKOOL. No other reproduction or transmission in any form permitted without written permission of NFPA. For inquires or to report unauthorized use, contact licensing@nfpa.org.



**8.2 Housekeeping.** All requirements of 8.2.1 through 8.2.3 shall be applied retroactively.

**8.2.1 Cleaning Frequency.**

**8.2.1.1*** Where the facility is intended to be operated with less than the dust accumulation defined by the owner/operator's chosen criterion in Section 6.1, the housekeeping frequency shall be established to ensure that the accumulated dust levels on walls, floors, and horizontal surfaces such as equipment, ducts, pipes, hoods, ledges, beams, and above suspended ceilings and other concealed surfaces, such as the interior of electrical enclosures, does not exceed the threshold dust mass/accumulation.

**8.2.1.2** Where the facility is intended to be operated with less than the dust accumulation defined by the owner/operator's chosen criterion in Section 6.1, a planned inspection process shall be implemented to evaluate dust accumulation rates and the housekeeping frequency required to maintain dust accumulations below the threshold dust mass/accumulation.

**8.2.1.3*** Where the facility is intended to be operated with less than the dust accumulation defined by the owner/operator's chosen criterion in Section 6.1, the housekeeping procedure shall include specific requirements establishing time to clean local spills or short-term accumulation to allow the elimination of the spilled mass or accumulation from the calculations in Section 6.1.

**8.2.1.4*** Where the facility is intended to be operated with more than the dust accumulation defined by the owner/operator's chosen criterion in Section 6.1, a documented risk evaluation acceptable to the authority having jurisdiction shall be permitted to be conducted to determine the level of housekeeping consistent with any dust explosion and dust flash fire protection measures provided in accordance with Section 6.4 and 11.2.2.

**8.2.2 Cleaning Methods.**

**8.2.2.1** Surfaces shall be cleaned in a manner that minimizes the risk of generating a fire or explosion hazard.

**8.2.2.2** Vacuuming shall be the preferred method of cleaning.

**8.2.2.3** Where vacuuming is impractical, permitted cleaning methods shall include sweeping and water wash-down.

**8.2.2.4*** Blow-downs using compressed air or steam shall be permitted to be used for cleaning inaccessible surfaces or surfaces where other methods of cleaning result in greater personal safety risk. Where blow-down using compressed air is used, the following precautions shall be followed:

(1) Vacuuming, sweeping, or water wash-down methods are first used to clean surfaces that can be safely accessed prior to using compressed air.
(2) Dust accumulations in the area after vacuuming, sweeping, or water wash-down do not exceed the threshold dust accumulation.
(3) Compressed air hoses are equipped with pressure relief nozzles limiting the discharge gauge pressure to 30 psi (207 kPa)in accordance with the OSHA requirements in 29 CFR 1910.242(b), "Hand and Portable Power Tools and Equipment, General."
(4) All electrical equipment potentially exposed to airborne dust in the area meets, as a minimum, the requirements of *NFPA 70*, *National Electrical Code*, NEMA 12 as defined by NEMA 250: or the equivalent.
(5) All ignition sources and hot surfaces capable of igniting a dust cloud or dust layer are shut down or removed from the area.

**8.2.2.5*** Housekeeping procedures shall be documented in accordance with the requirements of Sections 4.2 and 4.3.

**8.2.3 Portable Vacuum Cleaners.**

**8.2.3.1*** Portable vacuum cleaners that meet the following minimum requirements shall be permitted to be used to collect combustible particulate solids:

(1) Materials of construction shall comply with 7.13.2 and 9.3.2.
(2) Hoses shall be conductive or static dissipative.
(3) All conductive components, including wands and attachments, shall be bonded and grounded.
(4) Dust-laden air shall not pass through the fan or blower.
(5) Electrical motors shall not be in the dust laden air stream unless listed for Class II, Division 1 locations.
(6)*When liquids or wet material are picked up by the vacuum cleaner, paper filter elements shall not be used.
(7) Vacuum cleaners used for metal dusts shall meet the requirements of NFPA 484, *Standard for Combustible Metals*.

**8.2.3.2*** In Class II electrically classified (hazardous) locations, vacuum cleaners shall be listed for the purpose and location or shall be a fixed-pipe suction system with remotely located exhauster and air-material separator installed in conformance with Section 7.13 and shall be suitable for the dust being collected.

**8.2.3.3** Where flammable vapors or gases are present, vacuum cleaners shall be listed for Class I and Class II hazardous locations.

## Chapter 9 Ignition Sources

**9.1 Heat from Mechanical Sparks and Friction.**

**9.1.1 Risk Evaluation.** A documented risk evaluation acceptable to the authority having jurisdiction shall be permitted to be conducted to determine the level of protection to be provided according to this chapter.

**9.1.2 Foreign Materials.**

**9.1.2.1** Means shall be provided to prevent foreign material from entering the system when such foreign material presents an ignition hazard.

**9.1.2.2** Floor sweepings shall not be returned to any machine.

**9.1.2.3*** Foreign materials, such as tramp metal, that are capable of igniting combustible material being processed shall be removed from the process stream by one of the following methods:

(1) Permanent magnetic separators or electromagnetic separators that indicate loss of power to the separators
(2) Pneumatic separators
(3) Grates or other separation devices

Copyright 2014 National Fire Protection Association (NFPA). Licensed, by agreement, for individual use and download on October 4, 2014 to LEADER and READER for designated user PATTARAPORN SRITRAKOOL. No other reproduction or transmission in any form permitted without written permission of NFPA. For inquires or to report unauthorized use, contact licensing@nfpa.org.



**9.1.3* Inherently Ignitible Process Streams.**

**9.1.3.1** Where the process is configured such that the pneumatic conveying, dust collection, or centralized vacuum cleaning system conveys materials that can act as an ignition source, means shall be provided to minimize the hazard.

**9.1.3.2** The means used to minimize the ignition source hazard specified in 9.1.3.1 shall be permitted to include protection measures identified in 7.1.3 and Section 10.1, as appropriate.

**9.1.4* Belt Drives.** Belt drives shall be designed to stall without the belt's slipping, or a safety device shall be provided to shut down the equipment if slippage occurs.

**9.1.5* Bearings.**

**9.1.5.1** Roller or ball bearings shall be used on all processing and transfer equipment.

**9.1.5.2** Bushings shall be permitted to be used when a documented engineering evaluation shows that mechanical loads and speeds preclude ignition due to frictional heating.

**9.1.5.3** Lubrication shall be performed in accordance with the manufacturer's recommendations.

**9.1.6 Equipment.** Equipment with moving parts shall be installed and maintained so that true alignment is maintained and clearance is provided to minimize friction.

**9.2 Electrical Equipment.** All electrical equipment and installations shall comply with the requirements of Section 6.5.

**9.3* Static Electricity.** The requirements of 9.3.2 and 9.3.3 shall be applied retroactively.

**9.3.1** For electrostatic hazard assessment purposes, MIE determination of dust clouds shall be based on a purely capacitive discharge circuit in accordance with ASTM E 2019, *Standard Test Method for Minimum Ignition Energy of a Dust Cloud in Air.*

**9.3.2* Conductive Components.**

**9.3.2.1** All system components shall be conductive.

**9.3.2.2** Nonconductive system components shall be permitted where all of the following conditions are met:

(1) Hybrid mixtures are not present.
(2) Conductive dusts are not handled.
(3) The MIE of the material being handled is greater than 3 mJ.
(4) The nonconductive components do not result in isolation of conductive components from ground.
(5)*The breakdown strength across nonconductive sheets, coatings, or membranes does not exceed 4 kV when used in high surface charging processes.

**9.3.2.3*** Bonding and grounding with a resistance of less than $1.0 \times 10^6$ ohms to ground shall be provided for conductive components.

**9.3.3** Where belt drives are used, the belts shall be electrically conductive and have a resistance of less than $1.0 \times 10^6$ ohms to ground.

**9.3.4* Flexible Intermediate Bulk Containers (FIBCs).** FIBCs shall be permitted to be used for the handling and storage of combustible particulate solids in accordance with the requirements in 9.3.4.1 through 9.3.4.7.

**9.3.4.1*** Electrostatic ignition hazards associated with the particulate and objects surrounding or inside of the FIBC shall be included in the process hazard analysis required by 4.2.

**9.3.4.2** Type A FIBCs shall be limited to use with noncombustible particulate solids or combustible particulate solids having MIE >1000 mJ.

**9.3.4.2.1** Type A FIBCs shall not be used in locations where flammable vapors are present.

**9.3.4.2.2*** Type A FIBCs shall not be used with conductive particulate solids.

**9.3.4.3** Type B FIBCs shall be permitted to be used where combustible dusts having MIE >3 mJ are present.

**9.3.4.3.1** Type B FIBCs shall not be used in locations where flammable vapors are present.

**9.3.4.3.2*** Type B FIBCs shall not be used for conductive particulate solids.

**9.3.4.4** Type C FIBCs shall be permitted to be used with combustible particulate solids and in locations where flammable vapors having MIE >0.14 mJ are present.

**9.3.4.4.1** Conductive FIBC elements shall terminate in a grounding tab, and resistance from these elements to the tab shall be or less than $10^8$ ohms.

**9.3.4.4.2** Type C FIBCs shall be grounded during filling and emptying operations with a resistance to ground of less than 25 ohms.

**9.3.4.4.3** Type C FIBCs shall be permitted to be used for conductive particulate solids.

**9.3.4.5** Type D FIBCs shall be permitted to be used with combustible particulate solids and in locations where flammable vapor atmospheres having MIE >0.14 mJ are present.

**9.3.4.5.1** Type D FIBCs shall not be permitted to be used for conductive particulate solids.

**9.3.4.6*** Type B, Type C, and Type D FIBCs shall be tested and verified as safe for their intended use by a recognized testing organization in accordance with the requirements and test procedures specified in IEC 61340-4-4, *Electrostatics — Part 4-4: Standard Test Methods for Specific Applications — Electrostatic Classification of Flexible Intermediate Bulk Containers,* before being used in hazardous environments.

**9.3.4.6.1** Intended use shall include both the product being handled and the environment in which the FIBC will be used.

**9.3.4.6.2** Materials used to construct inner baffles, other than mesh or net baffles, shall meet the requirements for the bag type in which they are to be used.

**9.3.4.6.3** Documentation of test results shall be made available to the authority having jurisdiction.

**9.3.4.6.4** FIBCs that have not been tested and verified for type in accordance with IEC 61340-4-4, *Electrostatics — Part 4 4: Standard Test Methods for Specific Applications — Electrostatic Classification of Flexible Intermediate Bulk Containers,* shall be not be used for combustible dusts or in flammable vapor atmospheres.

**9.3.4.7*** Deviations from the requirements in 9.3.4.1 through 9.3.4.6 for safe use of FIBCs shall be permitted upon expert review and a documented risk assessment acceptable to the authority having jurisdiction.

Copyright 2014 National Fire Protection Association (NFPA). Licensed, by agreement, for individual use and download on October 4, 2014 to LEADER and READER for designated user PATTARAPORN SRITRAKOOL. No other reproduction or transmission in any form permitted without written permission of NFPA. For inquires or to report unauthorized use, contact licensing@nfpa.org.



**9.3.5 Rigid Intermediate Bulk Containers (RIBC).**

**9.3.5.1*** Conductive RIBCs shall be permitted to be used for dispensing into any flammable vapor, gas, dust, or hybrid atmospheres provided that the RIBC is electrically grounded.

**9.3.5.2*** Nonconductive RIBCs shall not be permitted to be used for applications, processes, or operations involving combustible particulate solids or where flammable vapors or gases are present unless a documented risk evaluation assessing the electrostatic hazards is acceptable to the authority having jurisdiction.

**9.3.6** Particulate solids shall not be manually dumped directly into vessels containing flammable atmospheres (gases at a flammable concentration with an oxidant) or where displacement could cause a flammable atmosphere external to the vessel.

**9.3.7*** Manual additions of solids through an open port or a manway into a vessel containing flammable atmospheres shall be permitted to be done in 50 lb (25 kg) batches or smaller, provided the requirements of 9.3.7.1 through 9.3.7.7 are satisfied.

**9.3.7.1*** Conductive or static-dissipative components of the container shall be grounded.

**9.3.7.2** Direct emptying of powders from nonconductive plastic bags into a vessel that contains a flammable atmosphere shall be strictly prohibited.

**9.3.7.3** The use of nonconductive liners in grounded conductive or static-dissipative outer packaging shall be permitted, provided that the liner thickness is less than 0.08 in. (2 mm) and the liner cannot become detached during emptying.

**9.3.7.4*** Loading chutes, receiving vessels, and auxiliary devices used for addition of bulk material shall be conductive and grounded.

**9.3.7.5*** Personnel in the vicinity of openings of vessels that contain flammable atmospheres shall be grounded.

**9.3.7.6** Operators shall wear flame-resistant garments as specified in NFPA 2113, *Standard on Selection, Care, Use, and Maintenance of Flame-Resistant Garments for Protection of Industrial Personnel Against Flash Fire*, and any other personal protective equipment required for protection against flash fire hazards during charging operations.

**9.3.7.7*** A documented risk evaluation acceptable to the authority having jurisdiction shall be conducted to determine additional engineering and administrative controls necessary to protect against ignition of the flammable atmosphere.

**9.4 Cartridge-Actuated Tools.** The requirements of 9.4.1 through 9.4.3 shall be applied retroactively.

**9.4.1** Cartridge-actuated tools shall not be used in areas where combustible material is produced, processed, or present unless all machinery is shut down and the area is cleaned and inspected to ensure the removal of all accumulations of combustible material.

**9.4.2** Accepted lockout/tagout procedures shall be followed for the shutdown of machinery.

**9.4.3** The use of cartridge-actuated tools shall be in accordance with 9.5.2.

**9.4.4** An inspection shall be made after the work is completed to ensure that no cartridges or charges are left in the area where they can enter equipment or be accidentally discharged after operation of the dust-producing or handling machinery is resumed.

**9.5 Open Flames and Sparks.** The requirements of 9.5.1 through 9.5.3 shall be applied retroactively.

**9.5.1** Cutting and welding shall comply with the applicable requirements of NFPA 51B, *Standard for Fire Prevention During Welding, Cutting, and Other Hot Work*.

**9.5.2** Grinding, chipping, and other operations that produce either sparks or open-flame ignition sources shall be controlled by a hot work permit system in accordance with NFPA 51B, *Standard for Fire Prevention During Welding, Cutting, and Other Hot Work*.

**9.5.3** Smoking shall be permitted only in designated areas.

**9.6 Process and Comfort Heating Systems.**

**9.6.1*** In areas processing combustible dust, process and comfort heating shall be provided by indirect means.

**9.6.2** Fired equipment shall be located outdoors or in a separate dust-free room or building.

**9.6.3** Air for combustion shall be taken from a clean outside source.

**9.6.4** Comfort air systems for processing areas containing combustible dust shall not be recirculated.

**9.6.5** Recirculating systems shall be permitted to be used provided that all of the following criteria are met:

(1) Only fresh makeup air is heated.
(2) The return air is filtered to prevent accumulations of dust in the recirculating system.
(3) The exhaust flow is balanced with fresh air intake.

**9.6.6** Comfort air shall not be permitted to flow from hazardous to nonhazardous areas.

**9.7* Hot Surfaces.** In areas where a dust explosion hazard or dust flash fire hazard exists, the temperature of external surfaces, such as compressors; steam, water, or process piping; ducts; and process equipment shall be maintained below 80 percent (in degrees Celsius) of the lower of the dust surface ignition temperature or the dust-cloud ignition temperature.

**9.8 Industrial Trucks.**

**9.8.1** Where used, industrial trucks shall be listed or approved for the electrical classification of the area, as determined by Section 6.5, and shall be used in accordance with NFPA 505, *Fire Safety Standard for Powered Industrial Trucks Including Type Designations, Areas of Use, Conversions, Maintenance, and Operations*.

**9.8.2*** Where industrial trucks, in accordance with NFPA 505, *Fire Safety Standard for Powered Industrial Trucks Including Type Designations, Areas of Use, Conversions, Maintenance, and Operations*, are not commercially available, a documented risk assessment acceptable to the authority having jurisdiction shall be permitted to be used to specify the fire and explosion prevention features for the equipment used.

## Chapter 10 Fire Protection

**10.1 General.** Fire protection systems, where installed, shall be specifically designed to address building protection, process equipment, and the chemical and physical properties of the materials being processed.

Copyright 2014 National Fire Protection Association (NFPA). Licensed, by agreement, for individual use and download on October 4, 2014 to LEADER and READER for designated user PATTARAPORN SRITRAKOOL. No other reproduction or transmission in any form permitted without written permission of NFPA. For inquires or to report unauthorized use, contact licensing@nfpa.org.



**10.2 System Requirements.** Fire protection systems required by this standard shall comply with 10.2.1 through 10.2.10.

**10.2.1*** Fire-extinguishing agents shall be compatible with the conveyed materials.

**10.2.2** Where fire detection systems are incorporated into pneumatic conveying, dust collection, or centralized vacuum cleaning systems, an analysis shall be conducted to identify safe interlocking requirements for air-moving devices and process operations.

**10.2.3** Where fire-fighting water or wet product can accumulate in the system, vessel and pipe supports shall be designed to support the additional water weight.

**10.2.4 Detection Systems.**

**10.2.4.1** Where fire detection systems are incorporated into the pneumatic conveying, dust collection, or centralized vacuum cleaning system, the fire detection systems shall be interlocked to shut down any active device feeding materials to the pneumatic conveying, dust collection, or centralized vacuum cleaning system, on actuation of the detection system.

**10.2.4.2** Where spark or infrared detection and extinguishing systems are provided, the process shall be permitted to continue operating on activation of the detection system.

**10.2.4.3** Where a spark or infrared detection system actuates a diverter valve that sends potentially burning material to a safe location, the process shall be permitted to continue operating on activation of the detection system.

**10.2.5** Where the actuation of fire-extinguishing systems is achieved by means of electronic fire detection, the fire detection system, including control panels, detectors, and notification appliances, shall be designed, installed, and maintained in accordance with *NFPA 72, National Fire Alarm and Signaling Code*.

**10.2.6** All fire detection initiating devices shall be connected to the fire detection control panel via Style D or E circuits as described in *NFPA 72, National Fire Alarm and Signaling Code*.

**10.2.7** All fire detection notification appliances shall be connected to the fire detection control panel via Style Y or Z circuits as described in *NFPA 72, National Fire Alarm and Signaling Code*.

**10.2.8 System Releasing Devices.**

**10.2.8.1** All fire-extinguishing system releasing devices, solenoids, or actuators shall be connected to the fire detection control panel via Style Z circuits as described in *NFPA 72, National Fire Alarm and Signaling Code*.

**10.2.8.2** The supervision shall include the continuity of the extinguishing system releasing device, whether that device is a solenoid coil, a detonator (explosive device) filament, or other such device.

**10.2.9** All supervisory devices that monitor critical elements or functions in the fire detection and extinguishing system shall be connected to the fire detection control panel via Style D or E circuits as described in *NFPA 72, National Fire Alarm and Signaling Code*.

**10.2.10 Abort Gates and Abort Dampers.**

**10.2.10.1** All fire protection abort gates or abort dampers shall be connected to the fire detection control panel via Style Z circuits as described in *NFPA 72, National Fire Alarm and Signaling Code*.

**10.2.10.2** The supervision shall include the continuity of the abort gate or abort damper releasing device, whether that device is a solenoid coil, a detonator (explosive device) filament, or other such device.

**10.3 Fire Extinguishers.**

**10.3.1** Portable fire extinguishers shall be provided throughout all buildings in accordance with the requirements of NFPA 10, *Standard for Portable Fire Extinguishers*.

**10.3.2*** Personnel shall be trained to use portable fire extinguishers in a manner that minimizes the generation of dust clouds during discharge.

**10.4 Hose, Standpipes, and Hydrants.**

**10.4.1** Standpipes and hose, where provided, shall comply with NFPA 14, *Standard for the Installation of Standpipe and Hose Systems*.

**10.4.2 Nozzles.**

**10.4.2.1*** Portable spray hose nozzles that are listed or approved for use on Class C fires shall be provided in areas that contain dust, to limit the potential for generating unnecessary airborne dust during fire-fighting operations.

**10.4.2.2*** Straight-stream nozzles shall not be used on fires in areas where dust clouds can be generated.

**10.4.2.3** Straight-stream nozzles or combination nozzles shall be permitted to be used to reach fires in locations that are otherwise inaccessible with the nozzles specified in 10.4.2.1.

**10.4.3** Private outside protection, including outside hydrants and hoses, where provided, shall comply with NFPA 13, *Standard for the Installation of Sprinkler Systems*.

**10.5* Automatic Sprinklers.**

**10.5.1*** Where a process that handles combustible particulate solids uses flammable or combustible liquids, a documented risk evaluation that is acceptable to the authority having jurisdiction shall be used to determine the need for automatic sprinkler protection in the enclosure in which the process is located.

**10.5.2** Automatic sprinklers, where provided, shall be installed in accordance with NFPA 13, *Standard for the Installation of Sprinkler Systems*.

**10.5.3** Where automatic sprinklers are installed, dust accumulation on overhead surfaces shall be minimized to prevent an excessive number of sprinkler heads from opening in the event of a fire.

**10.6 Spark/Ember Detection and Extinguishing Systems.** Spark/ember detection and extinguishing systems shall be designed, installed, and maintained in accordance with NFPA 69, *Standard on Explosion Prevention Systems*, and *NFPA 72, National Fire Alarm and Signaling Code*.

**10.7 Special Fire Protection Systems.**

**10.7.1** Automatic extinguishing systems or special hazard extinguishing systems, where provided, shall be designed, installed, and maintained in accordance with the following standards, as applicable:

(1) NFPA 11, *Standard for Low-, Medium-, and High-Expansion Foam*
(2) NFPA 12, *Standard on Carbon Dioxide Extinguishing Systems*

Copyright 2014 National Fire Protection Association (NFPA). Licensed, by agreement, for individual use and download on October 4, 2014 to LEADER and READER for designated user PATTARAPORN SRITRAKOOL. No other reproduction or transmission in any form permitted without written permission of NFPA. For inquires or to report unauthorized use, contact licensing@nfpa.org.



(3) NFPA 12A, *Standard on Halon 1301 Fire Extinguishing Systems*
(4) NFPA 15, *Standard for Water Spray Fixed Systems for Fire Protection*
(5) NFPA 16, *Standard for the Installation of Foam-Water Sprinkler and Foam-Water Spray Systems*
(6) NFPA 17, *Standard for Dry Chemical Extinguishing Systems*
(7) NFPA 25, *Standard for the Inspection, Testing, and Maintenance of Water-Based Fire Protection Systems*
(8) NFPA 750, *Standard on Water Mist Fire Protection Systems*
(9) NFPA 2001, *Standard on Clean Agent Fire Extinguishing Systems*

**10.7.2** The extinguishing systems shall be designed and used in a manner that minimizes the generation of dust clouds during their discharge.

**10.8 Alarm Service.** Alarm service, if provided, shall comply with *NFPA 72, National Fire Alarm and Signaling Code.*

**10.9 Impairments of Fire Protection and Explosion Prevention Systems.**

**10.9.1*** Impairments shall include anything that interrupts the normal intended operation of the fire protection or explosion prevention system.

**10.9.2*** A written impairment procedure shall be followed for every impairment to the fire protection or explosion prevention system.

**10.9.3*** Impairments shall be limited in size and scope to the system or portion thereof being repaired, maintained, or modified.

**10.9.4*** Impairment notification procedures shall be implemented by management to notify plant personnel and the authority having jurisdiction of existing impairments and their restoration.

## Chapter 11 Training and Procedures

**11.1 Employee Training.** The requirements of Sections 11.2 and 11.3 shall be applied retroactively.

**11.2 Plan.**

**11.2.1** Operating and maintenance procedures shall be developed.

**11.2.2*** Operating and maintenance procedures shall address personal protective equipment (PPE), including flame-resistant garments, in accordance with the workplace hazard assessment required by NFPA 2113, *Standard on Selection, Care, Use, and Maintenance of Flame-Resistant Garments for Protection of Industrial Personnel Against Flash Fire.*

**11.2.3** A written emergency response plan shall be developed for preventing, preparing for, and responding to work-related emergencies including but not limited to fire and explosion.

**11.2.4** The plans and procedures shall be reviewed annually and as required by process changes.

**11.3 Initial and Refresher Training.**

**11.3.1** Initial and refresher training shall be provided to employees who are involved in operating, maintaining, and supervising facilities that handle combustible particulate solids.

**11.3.2** Initial and refresher training shall ensure that all employees are knowledgeable about the following:

(1) Hazards of their workplace
(2) General orientation, including plant safety rules
(3) Process description
(4) Equipment operation, safe startup and shutdown, and response to upset conditions
(5) The necessity for proper functioning of related fire and explosion protection systems
(6) Equipment maintenance requirements and practices
(7) Housekeeping requirements
(8)*Emergency response plans

**11.4 Certification.** The employer shall certify annually that the training and review required by Sections 11.2 and 11.3 have been completed.

**11.5 Contractors and Subcontractors.**

**11.5.1** Owner/operators shall ensure that the requirements of 11.5.1.1 through 11.5.5 are met.

**11.5.1.1*** Only qualified contractors possessing the requisite craft skills shall be employed for work involving the installation, repair, or modification of buildings (interior and exterior), machinery, and fire protection equipment.

**11.5.1.2** Contractors involved in the commissioning, repair, or modification of explosion protection equipment shall be qualified as specified in Chapter 15 of NFPA 69, *Standard on Explosion Prevention Systems.*

**11.5.2 Contractor Training.**

**11.5.2.1** Contractors operating owner/operator equipment shall be trained and qualified to operate the equipment and perform the work.

**11.5.2.2** Written documentation shall be maintained detailing the training that was provided and who received it.

**11.5.3** Contractors working on or near a given process shall be made aware of the potential hazards from and exposures to fire, explosion, or toxic releases.

**11.5.4*** Contractors shall be trained and required to comply with the facility's safe work practices and policies, including but not limited to equipment lockout/tagout permitting, hot work permitting, fire system impairment handling, smoking, housekeeping, and use of personal protective equipment.

**11.5.5** Contractors shall be trained on the facility's emergency response and evacuation plan, including but not limited to emergency reporting procedures, safe egress points, and evacuation areas.

## Chapter 12 Inspection and Maintenance

**12.1 General Requirements.** The requirements of 12.1.1 through 12.1.3 shall be applied retroactively.

**12.1.1** An inspection, testing, and maintenance program shall be developed and implemented to ensure that the fire and explosion protection systems and related process controls and equipment perform as designed.

Copyright 2014 National Fire Protection Association (NFPA). Licensed, by agreement, for individual use and download on October 4, 2014 to LEADER and READER for designated user PATTARAPORN SRITRAKOOL. No other reproduction or transmission in any form permitted without written permission of NFPA. For inquires or to report unauthorized use, contact licensing@nfpa.org.



**12.1.2** The inspection, testing, and maintenance program shall include the following:

(1) Fire and explosion protection and prevention equipment in accordance with the applicable NFPA standards
(2) Dust control equipment
(3) Housekeeping
(4) Potential ignition sources
(5)*Electrical, process, and mechanical equipment, including process interlocks
(6) Process changes
(7) Lubrication of bearings

**12.1.3** Records shall be kept of maintenance and repairs performed.

**12.2 Specific Requirements.**

**12.2.1 Maintenance of Material Feeding Devices.**

**12.2.1.1** Bearings shall be lubricated and checked for excessive wear on a periodic basis.

**12.2.1.2** If the material has a tendency to adhere to the feeder or housing, the components shall be cleaned periodically to maintain good balance and minimize the probability of ignition.

**12.2.2 Maintenance of Air-Moving Devices.**

**12.2.2.1** Fans and blowers shall be checked periodically for excessive heat and vibration.

**12.2.2.2** Maintenance, other than the lubrication of external bearings, shall not be performed on fans or blowers while the unit is operating.

**12.2.2.3** Bearings shall be lubricated and checked periodically for excessive wear.

**12.2.2.4*** If the material has a tendency to adhere to the rotor or housing, the components shall be cleaned periodically to maintain good balance and minimize the probability of ignition.

**12.2.2.5*** The surfaces of fan housings and other interior components shall be maintained free of rust.

**12.2.2.6** Aluminum paint shall not be used on interior steel surfaces.

**12.2.3 Maintenance of Air-Material Separators.**

**12.2.3.1 Means to Dislodge.**

**12.2.3.1.1** Air-material separation devices that are equipped with a means to dislodge particulates from the surface of filter media shall be inspected periodically as recommended in the manufacturers' instructions for signs of wear, friction, or clogging.

**12.2.3.1.2** These devices shall be adjusted and lubricated as recommended in the manufacturers' instructions.

**12.2.3.2** Air-material separators that recycle air (i.e., cyclones and filter media dust collectors) shall be maintained to comply with 7.13.1.6.3.

**12.2.3.3** Filter media shall not be replaced with an alternative type unless a thorough evaluation of the fire hazards has been performed, documented, and reviewed by management.

**12.2.4 Maintenance of Abort Gates and Abort Dampers.** Abort gates and abort dampers shall be adjusted and lubricated as recommended in the manufacturers' instructions.

**12.2.5 Maintenance of Fire and Explosion Protection Systems.**

**12.2.5.1** All fire detection equipment monitoring systems shall be maintained in accordance with the requirements of *NFPA 72, National Fire Alarm and Signaling Code*.

**12.2.5.2** All fire-extinguishing systems shall be maintained pursuant to the requirements established in the standard that governs the design and installation of the system.

**12.2.5.3*** All vents for the relief of pressure caused by deflagrations shall be maintained.

**12.2.5.4** All explosion prevention systems and inerting systems shall be maintained pursuant to the requirements of NFPA 69, *Standard on Explosion Prevention Systems*.

## Annex A Explanatory Material

*Annex A is not a part of the requirements of this NFPA document but is included for informational purposes only. This annex contains explanatory material, numbered to correspond with the applicable text paragraphs.*

**A.1.1** Examples of industries that handle combustible particulate solids, either as a process material or as a fugitive or nuisance dust, include but are not limited to the following:

(1) Agricultural, chemical, and food commodities, fibers, and textile materials
(2) Forest and furniture products industries
(3) Metals processing
(4) Paper products
(5) Pharmaceuticals
(6) Resource recovery operations (tires, municipal solid waste, metal, paper, or plastic recycling operations)
(7) Wood, metal, or plastic fabricators

**A.3.2.1 Approved.** The National Fire Protection Association does not approve, inspect, or certify any installations, procedures, equipment, or materials; nor does it approve or evaluate testing laboratories. In determining the acceptability of installations, procedures, equipment, or materials, the authority having jurisdiction may base acceptance on compliance with NFPA or other appropriate standards. In the absence of such standards, said authority may require evidence of proper installation, procedure, or use. The authority having jurisdiction may also refer to the listings or labeling practices of an organization that is concerned with product evaluations and is thus in a position to determine compliance with appropriate standards for the current production of listed items.

**A.3.2.2 Authority Having Jurisdiction (AHJ).** The phrase "authority having jurisdiction," or its acronym AHJ, is used in NFPA documents in a broad manner, since jurisdictions and approval agencies vary, as do their responsibilities. Where public safety is primary, the authority having jurisdiction may be a federal, state, local, or other regional department or individual such as a fire chief; fire marshal; chief of a fire prevention bureau, labor department, or health department; building official; electrical inspector; or others having statutory authority. For insurance purposes, an insurance inspection department, rating bureau, or other insurance company representative may be the authority having jurisdiction. In many circumstances, the property owner or his or her designated agent assumes the role of the authority having jurisdiction; at government installations, the commanding officer or departmental official may be the authority having jurisdiction.

Copyright 2014 National Fire Protection Association (NFPA). Licensed, by agreement, for individual use and download on October 4, 2014 to LEADER and READER for designated user PATTARAPORN SRITRAKOOL. No other reproduction or transmission in any form permitted without written permission of NFPA. For inquires or to report unauthorized use, contact licensing@nfpa.org.



**A.3.2.4 Listed.** The means for identifying listed equipment may vary for each organization concerned with product evaluation; some organizations do not recognize equipment as listed unless it is also labeled. The authority having jurisdiction should utilize the system employed by the listing organization to identify a listed product.

**A.3.3.2 Air-Material Separator (AMS).** Examples include the following:

(1) Cyclonic separator (cyclone) — a device utilizing centrifugal forces and geometry to separate the conveying air/gas from the majority of the conveyed material. The efficiency of this separation is based upon many factors, such as the geometry of the cyclone, material particle size and density, and air/gas mass flow. Generally, this unit is considered only an initial or primary separator, and additional separation devices are applied to meet air pollution control requirements.
(2) Dust collector — a device utilizing filter media to separate fine dust particles from the conveying air/gas stream. Dust collectors often have automatic methods for continuous filter cleaning in order to maintain the operational efficiency of the device. Typically the filter media is either cartridges or bags. The operating pressure of this device is usually limited by its shape and physical construction.
(3) Filter receiver — similar to a dust collector but designed for higher differential pressure applications.
(4) Scrubber — a device utilizing geometry, physical barriers, and/or absorption methods, along with a fluid (e.g., sprays and streams) to separate and collect gases and/or dusts.
(5) Electrostatic precipitator — a device that utilizes differences in electrical charges to remove fine particulates from the air stream.
(6) Final filter — a high-efficiency device commonly utilizing a pre-filter and a secondary filter within an enclosure to provide the last particulate removal step before the air is discharged from the system. Final filters are commonly used when the air stream is recirculated to occupied areas. This device can provide protection against the failure of a dust collector or filter receiver upstream of the device. A high efficiency particulate air (HEPA) filter is an example.

**A.3.3.3 Air-Moving Device (AMD).** An air-moving device is a fan or blower. A general description of each follows:

(1) Fans
   (a) A wide range of devices that utilize an impeller, contained within a housing, that when rotated create air/gas flow by negative (vacuum) or positive differential pressure.
   (b) These devices are commonly used to create comparatively high air/gas volume flows at relatively low differential pressures.
   (c) These devices are typically used with ventilation and/or dust collection systems.
   (d) Examples are centrifugal fans, industrial fans, mixed or axial flow fans, and inline fans.
(2) Blowers
   (a) A wide range of devices that utilize various-shaped rotating configurations, contained within a housing, that when rotated create air/gas flow by negative (vacuum) or positive differential pressure.
   (b) These devices are commonly used to create comparatively high differential pressures at comparatively low air/gas flows.
   (c) The most common use of these devices are with pneumatic transfer, high-velocity, low volume (HVLV) dust collection, and vacuum cleaning systems.
   (d) Examples are positive displacement (PD) blowers, screw compressors, multi-stage centrifugal compressors/blowers and regenerative blowers.

**A.3.3.4 Centralized Vacuum Cleaning System.** This system normally consists of multiple hose connection stations hard-piped to an AMS located out of the hazardous area. Positive displacement or centrifugal AMDs can be used to provide the negative pressure air flow. The hoses and vacuum cleaning tools utilized with the system should be designed to be conductive or static-dissipative in order to minimize any risk of generating an ignition source. Low MIE materials should be given special consideration in the system design and use. A primary and secondary AMS separator combination (e.g., cyclone and filter receiver) can be used if large quantities of materials are involved. However, most filter receivers are capable of handling the high material loadings without the use of a cyclone.

**A.3.3.5 Combustible Dust.** Dusts traditionally were defined as material 420 µm or smaller (capable of passing through a U.S. No. 40 standard sieve). For consistency with other standards, 500 µm (capable of passing through a U.S. No. 35 standard sieve) is now considered an appropriate size criterion. Particle surface area-to-volume ratio is a key factor in determining the rate of combustion. Combustible particulate solids with a minimum dimension more than 500 µm generally have a surface-to-volume ratio that is too small to pose a deflagration hazard. Flat platelet-shaped particles, flakes, or fibers with lengths that are large compared to their diameter usually do not pass through a 500 µm sieve, yet could still pose a deflagration hazard. Many particulates accumulate electrostatic charge in handling, causing them to attract each other, forming agglomerates. Often agglomerates behave as if they were larger particles, yet when they are dispersed they present a significant hazard. Consequently, it can be inferred that any particulate that has a minimum dimension less than or equal to 500 µm could behave as a combustible dust if suspended in air or the process specific oxidizer. If the minimum dimension of the particulate is greater than 500 µm, it is unlikely that the material would be a combustible dust, as determined by test. The determination of whether a sample of combustible material presents a flash fire or explosion hazard could be based on a screening test methodology such as provided in the ASTM E 1226, *Standard Test Method for Explosibility of Dust Clouds*. Alternatively, a standardized test method such as ASTM E 1515, *Standard Test Method for Minimum Explosible Concentration of Combustible Dusts*, could be used to determine dust explosibility.

There is some possibility that a sample will result in a false positive in the 20 L sphere when tested by the ASTM E 1226 screening test or the ASTM E 1515 test. This is due to the high energy ignition source overdriving the test. When the lowest ignition energy allowed by either method still results in a positive result, the owner/operator can elect to determine whether the sample is a combustible dust with screening tests performed in a larger scale ($\geq 1\ m^3$) enclosure, which is less susceptible to overdriving and thus will provide more realistic results.

This possibility for false positives has been known for quite some time and is attributed to "overdriven" conditions that exist in the 20 L chamber due to the use of strong pyrotechnic igniters. For that reason, the reference method for explosibility testing is based on a $1\ m^3$ chamber, and the 20 L chamber

Copyright 2014 National Fire Protection Association (NFPA). Licensed, by agreement, for individual use and download on October 4, 2014 to LEADER and READER for designated user PATTARAPORN SRITRAKOOL. No other reproduction or transmission in any form permitted without written permission of NFPA. For inquires or to report unauthorized use, contact licensing@nfpa.org.



test method is calibrated to produce results comparable to those from the 1 $m^3$ chamber for most dusts. In fact, the U.S. standard for 20 L testing (ASTM E 1226) states, "The objective of this test method is to develop data that can be correlated to those from the 1 $m^3$ chamber (described in ISO 6184-1 and VDI 3673)…" ASTM E 1226 further states, "Because a number of factors (concentration, uniformity of dispersion, turbulence of ignition, sample age, etc.) can affect the test results, the test vessel to be used for routine work must be standardized using dust samples whose $K_{St}$ and $P_{max}$ parameters are known in the 1 $m^3$ chamber."

NFPA 68, *Standard on Explosion Protection by Deflagration Venting*, also recognizes this problem and addresses it stating that "the 20 L test apparatus is designed to simulate results of the 1 $m^3$ chamber; however, the igniter discharge makes it problematic to determine $K_{St}$ values less than 50 bar-m/sec. Where the material is expected to yield $K_{St}$ values less than 50 bar-m/sec, testing in a 1 $m^3$ chamber might yield lower values."

Any time a combustible dust is processed or handled, a potential for deflagration exists. The degree of deflagration hazard varies, depending on the type of combustible dust and the processing methods used.

A dust deflagration has the following four requirements:

(1) Combustible dust
(2) Dust dispersion in air or other oxidant
(3) Sufficient concentration at or exceeding the minimum explosible concentration (MEC)
(4) Sufficiently powerful ignition source such as an electrostatic discharge, an electric current arc, a glowing ember, a hot surface, welding slag, frictional heat, or a flame

If the deflagration is confined and produces a pressure sufficient to rupture the confining enclosure, the event is, by definition, an "explosion."

Evaluation of the hazard of a combustible dust should be determined by the means of actual test data. Each situation should be evaluated and applicable tests selected. The following list represents the factors that are sometimes used in determining the deflagration hazard of a dust:

(1) MEC
(2) MIE
(3) Particle size distribution
(4) Moisture content as received and as tested
(5) Maximum explosion pressure at optimum concentration
(6) Maximum rate of pressure rise at optimum concentration
(7) $K_{St}$ (normalized rate of pressure rise) as defined in ASTM E 1226, *Standard Test Method for Explosibility of Dust Clouds*
(8) Layer ignition temperature
(9) Dust cloud ignition temperature
(10) Limiting oxidant concentration (LOC) to prevent ignition
(11) Electrical volume resistivity
(12) Charge relaxation time
(13) Chargeability

It is important to keep in mind that as a particulate is processed, handled, or transported, the particle size generally decreases due to particle attrition. Consequently, it is often necessary to evaluate the explosibility of the particulate at multiple points along the process. Where process conditions dictate the use of oxidizing media other than air (nominally taken as 21 percent oxygen and 79 percent nitrogen), the applicable tests should be conducted in the appropriate process-specific medium.

**A.3.3.6 Combustible Particulate Solid.** Combustible particulate solids include dusts, fibers, fines, chips, chunks, flakes, or mixtures of these. The term *combustible particulate solid* addresses the attrition of material as it moves within the process equipment. Particle abrasion breaks the material down and produces a mixture of large and small particulates, some of which could be small enough to be classified as dusts. Consequently, the presence of dusts should be anticipated in the process stream, regardless of the starting particle size of the material.

**A.3.3.8 Deflagration.** The primary concern of this document is a deflagration that produces a propagating flame front or pressure increase that can cause personnel injuries or the rupture of process equipment or buildings. Usually these deflagrations are produced when the fuel is suspended in the oxidizing medium.

**A.3.3.9.1 Dust Explosion Hazard Area.** See NFPA 68, *Standard on Explosion Protection by Deflagration Venting*, for evaluating strength of enclosures.

**A.3.3.9.2 Dust Flash Fire Hazard Area.** Where the dust cloud concentration is equal to or greater than the MEC, it poses a dust explosion and dust flash fire hazard. A propagating deflagration yields a flash fire through the hazard area. In *Dust Explosions in the Process Industries*, Eckhoff observes for coal dust that if the cloud obscures a 25 W lightbulb over a 6.6 ft (2 m) length, the concentration is probably close to the MEC. It is customary to consider a dust cloud hazardous when the concentration exceeds 25 percent of the MEC. It is recognized that it is often very difficult or impractical to measure airborne dust concentration in this range in an industrial setting. For this reason, it is often necessary to rely on subjective measures to determine the dust cloud concentration.

**A.3.3.12 Dust Collection System.** A typical dust collection system consists of the following:

(1) Hoods — devices designed to contain, capture, and control the airborne dusts by using an induced air flow in close proximity to the point of dust generation (local exhaust zone) to entrain fugitive airborne dusts.
(2) Ducting — piping, tubing, fabricated duct, etc., used to provide the controlled pathway from the hoods to the dust collector (AMS). Maintaining adequate duct velocity (usually 4000 fpm or higher) is a key factor in the proper functioning of the system.
(3) Dust collector — an AMS designed to filter the conveyed dusts from the conveying air stream. Usually these devices have automatic methods for cleaning the filter media to allow extended use without blinding. In some systems, a scrubber or similar device is used in place of the filter unit.
(4) Fan package — an AMD designed to induce the air flow through the entire system.

The system is designed to collect only suspended dusts at the point of generation and not dusts at rest on surfaces. The system is also not designed to convey large amounts of dusts as the system design does not include friction loss due to solids loading in the pressure drop calculation. Thus, material loading must be minimal compared to the volume or mass of air flow.

**A.3.3.15 Flash Fire.** A flash fire requires an ignition source and a hydrocarbon, or an atmosphere containing combustible, finely divided particles (e.g., coal dust or grain) having a concentration greater than the lower explosive limit of the chemical. Both hydrocarbon and dust flash fires generate tem-

Copyright 2014 National Fire Protection Association (NFPA). Licensed, by agreement, for individual use and download on October 4, 2014 to LEADER and READER for designated user PATTARAPORN SRITRAKOOL. No other reproduction or transmission in any form permitted without written permission of NFPA. For inquires or to report unauthorized use, contact licensing@nfpa.org.



peratures from 1000°F to 1900°F (538°C to 1038°C). The intensity of a flash fire depends on the size of the gas, vapor, or dust cloud. When ignited, the flame front expands outward in the form of a fireball. The resulting effect of the fireball's energy with respect to radiant heat significantly enlarges the hazard areas around the point of ignition.

**A.3.3.16 Hybrid Mixture.** The presence of flammable gases and vapors, even at concentrations less than the lower flammable limit (LFL) of the flammable gases and vapors, adds to the violence of a dust-air combustion.

The resulting dust-vapor mixture is called a *hybrid mixture* and is discussed in NFPA 68, *Standard on Explosion Protection by Deflagration Venting*. In certain circumstances, hybrid mixtures can be deflagrable, even if the dust is below the MEC and the vapor is below the LFL. Furthermore, dusts determined to be nonignitible by weak ignition sources can sometimes be ignited when part of a hybrid mixture.

Examples of hybrid mixtures are a mixture of methane, coal dust, and air or a mixture of gasoline vapor and gasoline droplets in air.

**A.3.3.17.1 Flexible Intermediate Bulk Container (FIBC).** FIBCs are usually made from nonconductive materials. Electrostatic charges that develop as FIBCs are filled or emptied can result in electrostatic discharges, which may pose an ignition hazard for combustible dust or flammable vapor atmospheres within or outside the bag. The four types of FIBCs — Type A, Type B, Type C, and Type D — are based on their characteristics for control of electrostatic discharges.

**A.3.3.17.2 Rigid Intermediate Bulk Container (RIBC).** These are often called *composite IBCs*, which is the term used by U.S. Department of Transportation (DOT). The term *rigid nonmetallic intermediate bulk container* denotes an all-plastic single-wall IBC that might or might not have a separate plastic base and for which the containment vessel also serves as the support structure.

**A.3.3.18 Lower Flammable Limit (LFL).** LFL is also known as minimum explosible concentration (MEC).

**A.3.3.19 Minimum Explosible Concentration (MEC).** Minimum explosible concentration is defined by the test procedure in ASTM E 1515, *Standard Test Method for Minimum Explosible Concentration of Combustible Dusts*. MEC is equivalent to the lower flammable limit for flammable gases. Because it has been customary to limit the use of the lower flammable limit to flammable vapors and gases, an alternative term is necessary for combustible dusts.

The MEC is dependent on many factors, including particulate size distribution, chemistry, moisture content, and shape. Consequently, designers and operators of processes that handle combustible particulate solids should consider those factors when applying existing MEC data. Often, the necessary MEC data can be obtained only by testing.

**A.3.3.20 Minimum Ignition Energy (MIE).** The standard test procedure for MIE of combustible particulate solids is ASTM E 2019, *Standard Test Method for Minimum Ignition Energy of a Dust Cloud in Air,* and the standard test procedure for MIE of flammable vapors is ASTM E 582, *Standard Test Method for Minimum Ignition Energy and Quenching Distance in Gaseous Mixtures*.

**A.3.3.21 Noncombustible Material.** Materials that are reported as having passed ASTM E 136, *Standard Test Method for Behavior of Materials in a Vertical Tube Furnace at 750°C*, should be considered noncombustible materials. For the purposes of this standard, noncombustible construction and limited-combustible construction are both considered to be noncombustible.

**A.3.3.23 Pneumatic Conveying System.** Pneumatic conveying systems include a wide range of equipment systems utilizing air or other gases to transport solid particles from one point to another. A typical system comprises the following:

(1) A device used to meter the material into the conveying air stream
(2) Piping, tubing, hose, etc., used to provide the closed pathway from the metering device to the AMS
(3) An AMS designed for the separation of comparatively large amounts of material from the conveying air/gas stream
(4) An additional metering device (typically a rotary airlock valve or similar device) that might be used to allow discharge of the separated material from the conveying air stream without affecting the differential pressure of the system
(5) An AMD designed to produce the necessary pressure differential and air/gas flow in the system (positive or negative)

A pneumatic conveying system requires the amount of material conveyed by the system to be considered as a major factor in the system pressure drop calculations.

Both positive and negative (i.e., vacuum) differential pressure are used for pneumatic conveying. The decision of which is the best for a specific application should be based upon a risk analysis, equipment layout, and other system operational and cost factors.

Dense phase conveying can also be considered for the application, especially with more hazardous materials (e.g., low MIE). The inherent design and operational features of this approach can provide significant safety and operational advantages over other types of pneumatic conveying systems.

**A.3.3.31 Water-Compatible.** These materials include many of the cellulosics such as wood waste, paper dust, textile fibers, bulk agricultural products, municipal solid waste (MSW), refuse-derived fuel (RDF), and other organic materials, including coal and some plastic resins. Water spray extinguishment can be used for these materials when they are handled in systems in which the process equipment is also water-compatible.

**A.3.3.32 Water-Incompatible.** Water-incompatible materials are typified by those that dissolve in water or form mixtures with water that are no longer processable, for example, sugar. Although water is an effective extinguishing agent for sugar fires, the sugar dissolves in the water, resulting in a syrup that can no longer be processed pneumatically. A similar situation exists with flour; when mixed with water, it becomes dough. These materials are candidates for extinguishing systems that use media other than water until the damage potential of the fire approaches the replacement cost of the process equipment. Then water is used to protect the structure.

**A.3.3.33 Water-Reactive.** Water-reactive materials represent a very special fire protection problem. The application of water from fixed water-based extinguishing systems or by the fire service without awareness of the presence of these materials could seriously exacerbate the threat to human life or property. For example, many chemicals form strong acids or bases when mixed with water, thus introducing a chemical burn hazard. Additionally, most metals in the powdered state can burn with sufficient heat to chemically reduce water-yielding hydrogen, which can then support a deflagration.

Copyright 2014 National Fire Protection Association (NFPA). Licensed, by agreement, for individual use and download on October 4, 2014 to LEADER and READER for designated user PATTARAPORN SRITRAKOOL. No other reproduction or transmission in any form permitted without written permission of NFPA. For inquires or to report unauthorized use, contact licensing@nfpa.org.



These types of materials should be handled very carefully. Small quantities of water usually make matters worse.

**A.4.1.2** The design basis generally includes, but is not limited to, the general scope of work, design criteria, process description, material flow diagrams, basis for deflagration protection, basis for fire protection systems, and the physical and chemical properties of the process materials. The design generally includes, but is not limited to, equipment layouts, detailed mechanical drawings, specifications, supporting engineering calculations, and process and instrumentation diagrams.

**A.4.2.1** One method by which this requirement can be satisfied is with a process hazard analysis conducted in accordance with the methods outlined by the AIChE Center for Chemical Process Safety in *Guidelines for Hazard Evaluation Procedures*. To determine if a dust deflagration hazard exists, consider the following:

(1) Determine if the dust is explosible using either ASTM E 1226, *Standard Test Method for Explosibility of Dust Clouds*, or equivalent.
(2) Determine where in the process a dust cloud sufficient to support a deflagration could occur. Use loss records and knowledge of process conditions to make this assessment.
(3) Identify likely ignition sources. Recognize that ignition sources are complex and not always predictable. It is best to assume ignition is possible in all cases.
(4) Consider what the predictable consequences might be, using conservative assumptions to yield a credible worst case. Start with predictable primary events and then consider secondary events.
(5) Assess the likelihood of the event. For example, a material with a low MIE has a greater likelihood of ignition, all else being equal. Determine the MIE, if appropriate, using ASTM E 2019, *Standard Test Method for Minimum Ignition Energy of a Dust Cloud in Air*.
(6) Assess the risk of the event considering both the consequence and the likelihood. If the risk is intolerable to either the owner/operator or the AHJ, identify mitigation techniques that would reduce the risk by reducing the likelihood and/or the consequences.
(7) Assign responsibility and due dates for implementing the additional mitigation techniques and follow up to ensure their implementation.

**A.4.4.1** The size and extent of the incident that triggers this requirement should be proportional to the consequences. Significant events without consequences ("near misses") often indicate a serious underlying problem and should also be investigated. For example, a spark in a protected duct with a spark detection system would likely not require an investigation unless a significant increase in sparks per unit time was noted or the spark fails to be extinguished. Other examples include smoldering fires or "puffs."

**A.4.4.3** Incident reports should include the following information:

(1) Date of the incident
(2) Location of the incident and equipment/process involved
(3) Description of the incident, contributing factors, and the suspected cause
(4) Operation of automatic/manual fire protection systems and emergency response
(5) Recommendations and corrective actions taken or to be taken to prevent a reoccurrence

The incident report should be reviewed with appropriate management personnel and retained on file for future reference. The recommendations should be addressed and resolved. Incident reports are useful in support of the periodic process hazard analysis required by 4.2.4. The owner/operator should consider retaining the incident investigation reports for at least 5 years to be consistent with the process hazard analysis (PHA) review schedule.

**A.4.4.4** The owner/operator should consider sharing relevant learnings with other facilities within the company.

**A.4.5** The design of the pneumatic conveying, dust collection, and centralized vacuum cleaning system should be coordinated with the architectural and structural designs. The plans and specifications should include a list of all equipment, specifying the manufacturer and type number, and the information listed in A.4.5(1) through A.4.5(8). Plans should be drawn to an indicated scale and show all essential details as to location, construction, ventilation ductwork, volume of outside air at standard temperature and pressure that is introduced for safety ventilation, and control wiring diagrams.

(1) Name of owner and occupant
(2) Location, including street address
(3) Point of compass
(4) Ceiling construction
(5) Full height cross section
(6) Location of fire walls
(7) Location of partitions
(8) Materials of construction

**A.4.6.3** Other stakeholders could also have mission continuity goals that will necessitate more stringent objectives as well as more specific and demanding performance criteria. The protection of property beyond maintaining structural integrity long enough to escape is actually a mission continuity objective. The mission continuity objective encompasses the survival of both real property, such as the building, and the production equipment and inventory beyond the extinguishment of the fire. Traditionally, property protection objectives have addressed the impact of the fire on structural elements of a building as well as the equipment and contents inside a building. Mission continuity is concerned with the ability of a structure to perform its intended functions and with how that affects the structure's tenants. It often addresses post-fire smoke contamination, cleanup, replacement of damaged equipment or raw materials, and so forth.

**A.4.6.4.1** Adjacent compartments are those sharing a common enclosure surface (wall, ceiling, floor) with the compartment of fire or explosion origin. The intent is to prevent the collapse of the structure during the fire or explosion.

**A.4.7** Usually a facility or process system is designed using the prescriptive criteria until a prescribed solution is found to be unfeasible or impracticable. Then the designer can use the performance-based option to develop a design, addressing the full range of fire and explosion scenarios and the impact on other prescribed design features. Consequently, facilities are usually designed not by using performance-based design methods for all facets of the facility but rather by using a mixture of both design approaches as needed.

**A.5.1.3** Chapter 5 of NFPA *101*, *Life Safety Code*, provides a more complete description of the performance-based design process and requirements. In addition, the *SFPE Engineering Guide to Performance-Based Fire Protection Analysis and Design of*

Copyright 2014 National Fire Protection Association (NFPA). Licensed, by agreement, for individual use and download on October 4, 2014 to LEADER and READER for designated user PATTARAPORN SRITRAKOOL. No other reproduction or transmission in any form permitted without written permission of NFPA. For inquires or to report unauthorized use, contact licensing@nfpa.org.



*Buildings* outlines a process for developing, evaluating, and documenting performance-based designs.

**A.5.1.4** Relevant aspects that could require a re-evaluation include, but are not limited to, changes to the following:

(1) Information about the hazardous characteristics of the materials
(2) Information about the performance capabilities of protective systems
(3) Heretofore unrecognized hazards

Intentional changes to process materials, technology, equipment, procedures, and facilities are controlled by Section 4.3.

**A.5.2.5(3)** Deflagration vent operation does not constitute rupture of the equipment.

**A.5.3** The process hazard analysis conducted according to the requirement in Section 4.2 might be useful in identifying the scenarios for Section 5.3.

The fire and explosion scenarios defined in Section 5.3 assume the presence of an ignition source, even those scenarios limited by administrative controls (such as a hot work permit program). It is the responsibility of the design professional to document any scenario that has been excluded on the basis of the absence of an ignition source.

**A.5.4.1** The *SFPE Engineering Guide to Performance-Based Fire Protection Analysis and Design of Buildings* outlines a process for evaluating whether trial designs meet the performance criteria.

**A.6.1.1.3** For many situations, the layer depth method is the easiest and can be used for any application or ceiling height. Either of the mass methods can be used for any ceiling height. Mass method A does not require specific material properties or building strength data. Using mass method A for buildings with greater than 12 m ceiling height does not allow the user increased dust accumulation, compared to mass method B. Mass method B allows the owner/operator the greatest flexibility in addressing dust accumulations and takes into account specific building and material properties. However, this requires more detailed information about the building construction that might not be available for some buildings. When calculating dust loads by either method, include dust on mezzanines. When calculating the allowable volume or mass of dust, the area of the mezzanine is not added to the footprint of the building or room.

**A.6.1.1.5** In some cases, such as for fine particulates generated from hardwoods, it is advisable to correct for a settled bulk density in excess of the 20 lb/ft$^3$ (320 kg/m$^3$) used in this requirement.

The measurement of bulk density is dependent upon the particle size, shape, and chemical content. Settled bulk density is not the same as tapped bulk density. Settled bulk density is the density as the material has settled in the facility under normal operating conditions. Tapped bulk density is the maximum density that can be achieved without intentional compression. Tapped bulk density measurement numbers are almost always higher than settled bulk density measurement numbers.

Moisture content is a factor that has a profound effect on dust deflagration propagation. Moisture in dust particles raises the minimum ignition temperature (MIT), minimum ignition energy (MIE), and minimum explosible concentration (MEC) by increasing agglomeration of particles.

Moisture content can be determined using the following method:

(1) Weigh the material of which a moisture content is to be determined in the moist, as-received state.
(2) Dry the material for 24 hours in a drying oven set at 167°F (75°C).
(3) Reweigh the sample.

Calculate the moisture content from the following relation:

% MC = [(moist weight) − (dry weight)](100)/moist weight

While no ASTM method currently exists for determining settled bulk density, the following method has been utilized to produce usable results. Because bulk density measurements are used to determine the permissible dust layer depth for hazard assessment, bulk density should be based on the dried weight, not the moist weight; the water in the moist sample does not add combustible material to the mixture.

**Recommended Tools:** Neoprene or other similar plastic-type gloves, ruler, two natural bristle brushes [4 in. (100 mm) width], scales (that measure grams), pre-weighed container (weighed in grams to the nearest tenth of a gram), and a drying oven.

**Recommended Procedure:**

(1) Pre-weigh and record container weight.
(2) Locate horizontal surface area where dust is present and evenly distributed across a flat surface. This is an important criterion.
(3) Mark off a 1 ft$^2$ (0.09 m$^2$) area. (It is easier if one of the four sides is the horizontal surface ledge.) If an area 1 ft × 1 ft is not available due to the size of the surface use, ½ ft × 2 ft (0.15 m × 0.6 m) or ¼ ft × 4 ft (0.076 m × 1.2 m).
(4) Using the ruler as a guide, carefully scrape the other dust surrounding the marked 1 ft$^2$ (0.09 m$^2$) (or other established one square foot dimension) away from the dust square (or rectangle) at least 8–12 in. (0.2–0.3 m). Use the first brush if needed to clean dust away from the 1 ft$^2$ (0.09 m$^2$) selected for density measurement [ensuring that the 1 ft$^2$ (0.09 m$^2$) area does not receive any of the dust being brushed away].
(5) Measure and record the height [to the nearest 1⁄32 in. (0.8 mm)] of the dust layer as it sits on the horizontal layer. Take a minimum of three to five measurements along the edge of the dust layer to establish an average height [to the nearest 1⁄32 in. (0.8 mm)] of the dust layer.
(6) Take the second clean, natural bristle brush and carefully brush the dust contained inside the 1 ft$^2$ (0.09 m$^2$) area into the pre-weighed container.
(7) Dry dust sample as outlined above.
(8) Weigh the dried dust sample and the container together and record the weight in grams.
(9) Subtract the weight of the container from the weight of the dried dust-filled container to obtain the weight of the dried dust in grams. Record the dust weight.
(10) Calculate the volume of the dust layer using the average height measured (in inches) × length (12 in.) × height (12 in.) to obtain cubic inches of volume.
(11) Convert cubic inches to cubic feet.
(12) Convert grams of dust measured to pounds. (Note: 453.6 g = 1 lb).
(13) Divide pounds of dust by cubic feet to establish estimated density in pounds per cubic feet (lb/ft$^3$).

**Example:**

Container pre-weight is 500 g.
Average dust height measured is 2 1⁄32 in.
Container plus dust weight is 660 g.

Copyright 2014 National Fire Protection Association (NFPA). Licensed, by agreement, for individual use and download on October 4, 2014 to LEADER and READER for designated user PATTARAPORN SRITRAKOOL. No other reproduction or transmission in any form permitted without written permission of NFPA. For inquires or to report unauthorized use, contact licensing@nfpa.org.



**Determination of Dust Volume ($ft^3$)**

(1) 2 1/32 in. = 65/32 in., or 2.03125 in.
(2) Volume ($in.^3$) = L × W × H = 12 in. × 12 in. × 2.03125 in. = 292.5 $in.^3$
(3) Convert cubic inches to cubic feet. There are 1728 $in.^3$ in 1 $ft^3$.
(4) Volume ($ft^3$) = Volume ($in.^3$) ÷ 1728 = 292.5 ÷ 1728 = 0.169 $ft^3$ (0.0048 $m^3$)
(5) (305 mm × 305 mm × 51.6 mm) = (0.305 m × 0.305 m × 0.0516 m = 0.0048 $m^3$)

**Determination of Dust Weight (lb)**

To obtain the weight of the dust, subtract the container weight in grams from the weight of the container containing the dried sample:

(1) 660 g − 500 g = 160 g
(2) Convert grams to pounds. There are 453.6 g in 1 lb, therefore: 160 g ÷ 453.6 g/lb = 0.353 lb (of dust)

**Determination of Dust Density**

(1) Divide pounds of dust by volume of dust in cubic feet: 0.353 lb ÷ 0.169 $ft^3$ = 2.087 lb/$ft^3$
(2) Round off to nearest tenth of a pound = 2.1 lb/$ft^3$: [0.16 kg ÷ 0.0048 $m^3$] (33.43 kg/$m^3$)

**A.6.1.3** See Annex D for example calculations applying the layer depth criterion method.

**A.6.1.3.2** See Section D.2 for example of how to apply this method.

**A.6.1.4** Mass per unit area derived from these mass determination methods can be used to derive a measurable layer depth using the fact that mass divided by settled bulk density equals layer depth. See Section D.3 for an example of how to apply this method.

Because fugitive dust could accumulate in a localized area of the building or room (localized area less than 10 percent of the total floor area), the floor area limit ($A_{floor}$) used in the equations in 6.1.4.1 or 6.1.4.2 has been set to 2000 $m^2$. For an example of the calculation of threshold dust mass, see Annex D.

**A.6.1.5** See Section D.3 for an example of how to apply this method.

**A.6.1.5.1** The dust explosion hazard area equation in 6.1.5.1 originates from the partial volume equation in NFPA 68, *Standard on Explosion Protection by Deflagration Venting*, which adjusts the amount of venting needed when the design scenario presumes the combustible mixture fills only a part of the enclosure. NFPA 68 uses the ratio of $P_{red}$ to $P_{max}$ and the fill fraction to make this adjustment. $P_{red}$ is the maximum pressure predicted to be developed during a vented deflagration and should be less than the strength of the weakest building structural element not intended to vent or fail. Windows, for instance, might be intended to fail. NFPA 68 sets an upper bound for $P_{red}$, ensuring that the calculated pressure during the event does not exceed the strength of the enclosure. This upper bound is $P_{es}/DLF$, the dynamic strength of the weakest building structural element not intended to vent or fail. In the implementation here, the goal is to see if any explosion venting is needed to prevent damage to the main building structural components; thus, $P_{red}$ is equated to its maximum allowable value, based on the building/room design.

In a deflagration, the pressure that is developed changes with the dust concentration. The equation in 6.1.5.1 uses the so-called worst case concentration of dust in a combustible mixture, $C_w$, as defined in NFPA 68. A conservative way to evaluate the pressure attained at lower average dust concentration is to assume that all of the dust available is concentrated in a smaller volume than the worst case concentration. This smaller volume is a fraction of the total volume, the fill fraction. In the equation in 6.1.5.1, the threshold dust mass, $M_{exp}$, divided by the product of worst case concentration and building volume is the fill fraction. When the accumulated dust mass is larger than the threshold for the explosion hazard, then the fill fraction is greater than the ratio of $P_{es}/DLF$ to $P_{max}$, and an explosion hazard exists.

**A.6.1.5.1.2** See FPRF, *Report Towards Estimating Entrainment Fraction for Dust Layers*. See NFPA 68, *Standard on Explosion Protection by Deflagration Venting*, for additional information.

**A.6.1.5.2** The dust flash fire hazard area equation in 6.1.5.2 estimates the fraction of the volume that could be filled by an expanded fireball from burning dust. The room or building volume up to person height is taken as the total volume for this hazard, regardless of actual building height. The threshold for the flash fire hazard is based on allowing the accumulated dust mass to reach the worst case concentration in an unburnt volume, which, when expanded in a fireball, is only a fraction of the volume described by the product of person height and floor area. The relation in 6.1.5.2 uses as its risk tolerance criterion the probability ($p$) of an occupant being in the same location as the deflagration flame. This choice implies that some residual risk remains.

**A.6.1.5.2.1** See FPRF, *Report Towards Estimating Entrainment Fraction for Dust Layers*. See NFPA 68, *Standard on Explosion Protection by Deflagration Venting*, for additional information.

**A.6.1.6** The risk evaluation method in 6.1.6 supplements the process hazard analysis required in Chapter 4. It is intended to focus on material properties and inherent design features of the equipment and the facility necessary to determine the extent of the hazard areas.

**A.6.2.3.1** A relatively small initial dust deflagration can disturb and suspend in air dust that has been allowed to accumulate on the flat surfaces of a building or equipment. Such a dust cloud provides fuel for the secondary deflagration, which can cause damage. Reducing significant additional dust accumulations is therefore a major factor in reducing the hazard in areas where a dust hazard can exist. *(See Annex D.)*

**A.6.2.3.2** The assertion of separation must recognize the dust accumulation on all surfaces in the intervening distance, including floors, beam flanges, piping, ductwork, equipment, suspended ceilings, light fixtures, and walls. Process equipment or ductwork containing dust can also provide a connecting conduit for propagation between accumulation areas. The National Grain and Feed Association study "Dust Explosion Propagation in Simulated Grain Conveyor Galleries" has shown that a layer as thin as 1/100 in. (0.25 mm) is sufficient to propagate flame in a limited expansion connection, such as an exhaust duct or a hallway. In the subject study the flame propagated for at least 80 ft (24.4 m).

**A.6.3.3** Window ledges, girders, beams, and other horizontal projections or surfaces can have the tops sharply sloped, or other provisions can be made to minimize the deposit of dust thereon. Overhead steel I-beams and similar structural shapes can be boxed with concrete or other noncombustible material to eliminate surfaces for dust accumulation. Surfaces should

Copyright 2014 National Fire Protection Association (NFPA). Licensed, by agreement, for individual use and download on October 4, 2014 to LEADER and READER for designated user PATTARAPORN SRITRAKOOL. No other reproduction or transmission in any form permitted without written permission of NFPA. For inquires or to report unauthorized use, contact licensing@nfpa.org.



be as smooth as possible to minimize dust accumulations and to facilitate cleaning.

**A.6.3.10** The use of loadbearing walls should be avoided to prevent structural collapse should an explosion occur.

**A.6.4** The design of deflagration venting should be based on information contained in NFPA 68, *Standard on Explosion Protection by Deflagration Venting*.

**A.6.4.1** The need for building deflagration venting is a function of equipment design, particle size, deflagration characteristics of the dust, and housekeeping requirements. As a rule, deflagration venting is recommended unless there can be reasonable assurance that hazardous quantities of combustible and dispersible dusts will not be permitted to accumulate outside of equipment.

Where building explosion venting is needed, detaching the operation to an open structure or to a building of damage-limiting construction is the preferred method of protection. Damage-limiting construction involves a room or building that is designed such that certain interior walls are pressure resistant (can withstand the pressure of the deflagration) to protect the occupancy on the other side and some exterior wall areas are pressure relieving to provide deflagration venting. It is preferable to make maximum use of exterior walls as pressure-relieving walls (as well as the roof wherever practical), rather than to provide the minimum recommended. Further information on this subject can be found in NFPA 68, *Standard on Explosion Protection by Deflagration Venting*.

Deflagration vent closures should be designed such that, once opened, they remain open to prevent failure from the vacuum following the pressure wave.

**A.6.4.2** For further information on restraining vent closures and fireball impingement areas, see NFPA 68, *Standard on Explosion Protection by Deflagration Venting*.

**A.6.5.2** Refer to NFPA 499, *Recommended Practice for the Classification of Combustible Dusts and of Hazardous (Classified) Locations for Electrical Installations in Chemical Process Areas*. See also Table A.6.5.2 (Note: Table A.6.5.2 does not apply to Class III materials).

Threshold dust accumulation that would require electrically classified equipment is tied to the likelihood of the accumulations and the housekeeping policy as shown in Table A.6.5.2 provided as guidance. However, neither the *NFPA 70, National Electrical Code* nor NFPA 654 provides a mandatory prescription for the user to decide how much dust accumulation should trigger the use of classified equipment.

When evaluating how much dust is too much for electrical equipment, several factors need to be considered. *NFPA 70* provides Class II, Division 1 and Division 2 criteria in article 500. It states that a Division 2 location is one of the following:

(1) A location in which combustible dust due to abnormal operations may be present in the air in quantities sufficient to produce explosive or ignitible mixtures
(2) A location in which combustible dust accumulations are present but are normally insufficient to interfere with the normal operation of electrical equipment or other apparatus but could, as a result of infrequent malfunctioning of handling or processing equipment, become suspended in the air
(3) A location in which combustible dust accumulations on, in, or in the vicinity of the electrical equipment could be sufficient to interfere with the safe dissipation of heat from electrical equipment or could be ignitible by abnormal operation or failure of electrical equipment

The first two criteria deal with the potential for presence of a dust cloud in the location under abnormal conditions. The third criterion deals with the potential for ignition of a dust accumulation by unprotected hot surfaces, either internal or external to the electrical equipment under normal as well as abnormal conditions. The first and second criteria are process related, and the third criterion is directly related to the layer thickness on the electrical equipment.

The likelihood of a dust to be heated to ignition temperature when accumulated on the outside of an electrical enclosure or a piece of electrical equipment is a function of the thickness, thermal conductivity, density, and combustion chemistry of the dust layer as well as the fractional coverage of the equipment's heat dissipation area and the time it remains on the heated equipment.

Both NFPA 654 and NFPA 499 recognize early ignition possibilities due to dehydration and carbonization phenomena but do not offer any methods to evaluate this potential. The appropriate electrical equipment for a given dust is that equipment designed with a maximum surface temperature, designated by the T-code, less than the lower of the layer or cloud ignition temperature of the specific dust. The layer ignition temperature can be determined according to ASTM E 2021, *Standard Test Method for Hot-Surface Ignition of Dust Layers*, using at least a ½ in. (13 mm) layer thickness. This is greater than the ⅛ in. (3.2 mm) nominal dust layer establishing a Division 1 hazardous (classified) area per NFPA 499, thus providing a safety factor. NFPA 499 also establishes that a Division 2 hazardous (classified) area would exist when the dust layer prevents clearly discerning the underlying floor color. Given that dust layers tend to be thicker on the upward-facing surfaces of equipment while heat dissipation area is more evenly distributed, it can be seen that this is a significantly conservative approach.

**A.7.1** The following items describe areas of concern during the design and installation of process equipment:

(1) The elimination of friction by use of detectors for slipping belts, temperature supervision of moving or impacted surfaces, and so forth
(2) Pressure resistance or maximum pressure containment capability and pressure-relieving capabilities of the machinery or process equipment and of the building or room
(3) The proper classification of electrical equipment for the area and condition
(4) Proper alignment and mounting to minimize or eliminate vibration and overheated bearings
(5) The use of electrically conductive belting, low-speed belts, and short center drives as a means of reducing static electricity accumulation *(See Section 9.3.)*
(6) Power transmitted by belt, chain, or shaft as follows:
    (a) For power transmitted to apparatus within the processing room by belt or chain, a nearly dusttight enclosure of the belt or chain constructed of substantial noncombustible material that should be maintained under positive air pressure
    (b) For power transmitted by means of shafts, shafts that pass through close-fitting shaft holes in walls or partitions

Copyright 2014 National Fire Protection Association (NFPA). Licensed, by agreement, for individual use and download on October 4, 2014 to LEADER and READER for designated user PATTARAPORN SRITRAKOOL. No other reproduction or transmission in any form permitted without written permission of NFPA. For inquires or to report unauthorized use, contact licensing@nfpa.org.



**Table A.6.5.2 Guidance for Area Electrical Classification**

| Depth of Dust Accumulation (in.) | Frequency | Housekeeping Requirement | Area Electrical Classification |
|---|---|---|---|
| Negligible[a] | N/A | N/A | Unclassified (general purpose) |
| Negligible to <1/32[b] | Infrequent[c] | Clean up during same shift. | Unclassified (general purpose) |
| Negligible to <1/32[b] | Continuous/frequent[d] | Clean as necessary to maintain an average accumulation below 1/64 in.[e] | Unclassified; however, electrical enclosures should be dusttight[f,g] |
| 1/32 to 1/8 | Infrequent[c] | Clean up during same shift. | Unclassified; however, electrical enclosures should be dusttight[f,g] |
| 1/32 to 1/8 | Continuous/frequent[d] | Clean as necessary to maintain an average accumulation below 1/16 in. | Class II, Division 2 |
| >1/8 | Infrequent[c] | Immediately shut down and clean. | Class II, Division 2 |
| >1/8 | Continuous/frequent[d] | Clean at frequency appropriate to minimize accumulation. | Class II, Division 1 |

Note: For SI units, 1 in. = 25.4 mm.

Note: This table does not apply to Class III materials.

[a]Surface color just discernible under the dust layer.

[b]1/32 in. is approximately the thickness of a typical paper clip.

[c]Episodic release of dust occurring not more than about two or three times per year.

[d]Episodic release of dust occurring more than about three times per year or continuous release resulting in stated accumulation occurring in approximately a 24-hour period.

[e]It has been observed that a thickness of about 1/64 in. of a low-density dust is sufficient to yield a small puffy cloud with each footstep.

[f]For example, National Electrical Manufacturers Association (NEMA) 12 or better. Note: Ordinary equipment that is not heat producing, such as junction boxes, can be significantly sealed against dust penetration by the use of silicone-type caulking. This can be considered in areas where fugitive dust is released at a slow rate and tends to accumulate over a long period of time.

[g]Guidance to be applied for existing facilities. For new facilities, it is recommended that the electrical classification be at least Class II, Division 2.

**A.7.1.3** A means to determine protection requirements should be based on a risk evaluation, with consideration given to the size of the equipment, consequences of fire or explosion, combustible properties and ignition sensitivity of the material, combustible concentration, and recognized potential ignition sources. See AIChE Center for Chemical Process Safety, *Guidelines for Hazard Evaluation Procedures*.

**A.7.1.4.1(1)(b)** The maximum allowable concentration of oxygen is very dependent on the material, its chemical composition, and, in the case of particulate solids, the particle sizes. In addition, with many combustible metals, it is not advisable to completely eliminate oxygen from the transport gas. During transport, particles can be abraded and broken, exposing unoxidized metal (virgin metal) to the transport gas. When that metal is finally exposed to oxygen-containing air, the rapid oxidation of the virgin metal could produce sufficient heat to ignite the material. It is, therefore, preferable to provide for a low concentration of oxygen in the transport gas stream to ensure the oxidation of virgin metal as it is exposed during the course of transport.

**A.7.1.4.1(2)** Where deflagration venting is used, its design should be based on information contained in NFPA 68, *Standard on Explosion Protection by Deflagration Venting*. For deflagration relief venting through ducts, consideration should be given to the reduction in deflagration venting efficiency caused by the ducts. The relief duct should be restricted to no more than 20 ft (6 m).

**A.7.1.4.1(5)** This method is limited in effectiveness due to the high concentrations of inert material required and the potential for separation during handling. Other methods are preferred.

**A.7.1.4.1(6)** For information on dust retention and flame-arresting devices, see NFPA 68, *Standard on Explosion Protection by Deflagration Venting*, Section 9.7.

**A.7.1.6** Methods of explosion protection using containment, venting, and suppression protect the specific process equipment on which they are installed. For details on deflagration propagation, see Annex E.

**A.7.1.7** Exposures of concern include, but are not limited to, bagging operations and hand-dumping operations where the discharge of a fireball from the pickup point endangers personnel. A common example for the application of such isolation would be in the upstream ductwork associated with a dust collection system servicing a work area. Loading chutes less than 10 ft (3 m) in length and designed for gravity flow are not considered ductwork. Common design factors that can reduce the risk of explosion propagation include the following:

(1) The material being conveyed is not a metal dust or hybrid mixture.

Copyright 2014 National Fire Protection Association (NFPA). Licensed, by agreement, for individual use and download on October 4, 2014 to LEADER and READER for designated user PATTARAPORN SRITRAKOOL. No other reproduction or transmission in any form permitted without written permission of NFPA. For inquires or to report unauthorized use, contact licensing@nfpa.org.



(2) The connecting ductwork is smaller than 4 in. (0.1 m) in diameter.
(3) The maximum concentration of dust conveyed through the duct is less than 25 percent of the MEC of the material.
(4) The conveying velocity is high enough to prevent accumulation of combustible dust in any portion of the duct.
(5) The air-material separator is properly designed for explosion protection by means other than explosion containment.
(6) The upstream work areas do not contain large quantities of dust that can be entrained by a pressure pulse from an explosion in the air-material separator.

**A.7.1.8** These devices reduce the frequency or likelihood that the sparks will cause a deflagration but do not eliminate the need for deflagration isolation devices. The abort gate cannot be relied on to serve as a deflagration isolation device because the response time is relatively slow and construction is usually unsuitable for withstanding explosion pressures.

Additional information on spark extinguishing systems can be found in Annex C.

**A.7.2.1.2** Shipping containers can pose a deflagration hazard; however, deflagration protection measures for these units are not always practical. Consideration should be given to deflagration hazards when electing to omit deflagration protection.

**A.7.2.3.2.2(2)** Small containers can pose an explosion hazard; however, explosion protection measures for these units are not always practicable. Consideration should be given to explosion hazards when electing to omit protection.

**A.7.2.3.3.2** See A.7.2.3.2.2(2).

**A.7.2.4** Horizontal projections can have the tops sharply sloped to minimize the deposit of dust thereon. Efforts should be made to minimize the amount of surfaces where dust can accumulate.

**A.7.2.5** For information on designing deflagration venting, see NFPA 68, *Standard on Explosion Protection by Deflagration Venting*.

**A.7.3.1.1** For additional information, see ASTM E 2012, *Standard Guide for the Preparation of a Binary Chemical Compatibility Chart*.

**A.7.3.2** The design of a the pneumatic conveying, dust collection, or centralized vacuum cleaning system should be coordinated with the architectural and structural designs. The plans and specifications should include a list of all equipment, specifying the manufacturer and type number, and the following information:

(1) Name of owner and occupant
(2) Location, including street address
(3) Point of compass
(4) Ceiling construction
(5) Full-height cross section
(6) Location of fire walls
(7) Location of partitions
(8) Materials of construction

Plans should be drawn to an indicated scale and show all essential details such as location, construction, ventilation ductwork, volume of outside air at standard temperature and pressure that is introduced for safety ventilation, and control wiring diagrams.

Dust collection systems and centralized vacuum cleaning systems handling combustible dusts usually use branched duct networks with multiple pickup points and variable material loading. In contrast, dilute phase and dense phase pneumatic conveying systems typically are linear systems with controlled infeed and consistent material loading. Pneumatic conveying systems generally represent a lower deflagration risk. However, that does not mean there is no deflagration risk. Risk analysis should be used to determined the level of risk involved and the correct means to minimize that risk.

**A.7.3.2.2** These systems are designed for specific safety and performance requirements. Modifications to the system can significantly change the ability of the system to provide the original design performance. An analysis of any proposed changes should be done in accordance with Section 4.3 (concerning management of change) to ensure the system will still be able to meet safety and performance requirements.

**A.7.3.2.4** The minimum gas velocity to transport materials varies considerably due to the material characteristics, conveying rates, conveying distances, and other factors. If the velocity falls below the minimum requirement, plugging and other upset conditions could occur and lead to an unsafe operating condition. Typically the minimum gas velocities are established by testing or are based on existing data from the system designer or vendor.

**A.7.3.2.5** Rotary valves and diverter valves are not addressed in the *ASME Boiler and Pressure Vessel Code* or ASME B.31.3, *Process Piping*, so they would not be required to comply with those codes.

**A.7.3.2.5.1** Except for inerted systems, it is preferable to design systems that handle combustible particulate solids to operate under negative pressure.

**A.7.3.2.6.1** Proper dust collection design requires that a minimum air volume flow be maintained for each dust collection source point (such as a hood). This value should be determined as part of the design process. This is the value that should be documented to allow for field testing to determine if the system is providing that flow and operating properly.

**A.7.3.2.6.2** *Industrial Ventilation: A Manual of Recommended Practice* has extensive information on the design basis for dust collection hoods and the necessary minimum air volumes and velocities to ensure the containment, capture (i.e., collection), and control of the aerated dusts being generated.

**A.7.3.2.6.3** Proper system design requires that air flows in the various branch lines be balanced to ensure minimum air volume flow at each dust source collection point. When a branch line is disconnected, blanked off, or otherwise modified, it changes the air flows in all the other branches of the system. This can lead to an imbalance of air flows, resulting in flows below the minimum required to keep dust from accumulating in the ducts.

**A.7.3.2.6.4** Adding additional branch lines for additional dust sources to an existing dust collection system will result in lower air volumes and duct velocities for the existing portions of the system. Without provisions for additional system performance, this can result in a system performing below the minimum required for keeping the ducts free from material accumulations. It is also possible that modifications could result in failure of the main equipment items.

**A.7.3.2.6.5** According to *Industrial Ventilation: A Manual of Recommended Practice*, the duct air velocity can range from a minimum of 3500 fpm (18 m/s) to significantly higher levels. However, that document is for all dusts, including noncombustible

Copyright 2014 National Fire Protection Association (NFPA). Licensed, by agreement, for individual use and download on October 4, 2014 to LEADER and READER for designated user PATTARAPORN SRITRAKOOL. No other reproduction or transmission in any form permitted without written permission of NFPA. For inquires or to report unauthorized use, contact licensing@nfpa.org.



dusts. A velocity of 4000 fpm (20 m/s) is recommended as a minimum value for the conveying of combustible dusts. Also, some combustible dusts have material characteristics (e.g., cohesiveness, adhesiveness, particle shape and size, particle density) that require significantly higher duct velocities to minimize the possibility of accumulations in the ducts. For instance, NFPA 484, *Standard for Combustible Metals*, requires a minimum duct velocity of 4500 fpm (23 m/s) for metal dusts.

**A.7.3.2.6.6** Dust collection systems and centralized vacuum cleaning systems handling combustible dusts usually use branched duct networks with multiple pickup points and variable material loading. In contrast, dilute phase and dense phase pneumatic conveying systems are typically linear systems with controlled infeed and consistent material loading. Dust collection systems for combustible dusts represent a significant increase in deflagration risk compared with most pneumatic conveying systems. A properly designed system is critical to minimizing that risk. For guidance on determining proper dust collection system design, refer to *Industrial Ventilation: A Manual of Recommended Practice*, published by the American Conference of Governmental Industrial Hygienists (ACGIH).

**A.7.3.2.6.8** Where combustible dust emissions are likely, they should be managed with a dust collection system. The operator should not rely on the HVAC system to prevent dust accumulations. It is recognized that dust collection systems might not capture 100 percent of the dusts released from localized sources. It is not the intent of this requirement to prohibit the use of HVAC systems where incidental amounts of airborne dust are present and the HVAC system has been designed to address this hazard. Special attention should be given to areas where low air velocity exists and dust can settle out, such as the return air plenum.

**A.7.3.2.7** Centralized vacuum cleaning systems represent a significant deflagration risk due to the fact that the system is designed to both collect and convey combustible dusts and that tramp metals and other foreign materials that could create an ignition source can enter the system through the vacuuming process. However, through proper design and protection of the system against deflagration, this system can provide for the removal of combustible dusts from plant areas where dust accumulations represent a risk to personnel and property. Furthermore, the dust, once removed through the vacuuming process, can be located in an area where it can be properly handled with minimal risk.

**A.7.3.2.7.1** No more than two simultaneous hose connection stations should be allowed on any one line to the AMS. This is to ensure that adequate transport velocity can be maintained with just a single operator on the same line. Multiple lines to the AMS can be used to allow for more than two simultaneous operators on the whole system (with no more than two simultaneous operators allowed on each line).

The minimum conveying velocity will vary with the typical combustible dusts being conveyed. Usually, the minimum conveying velocities will be the same as the minimum required for pneumatic conveying of the same material.

**A.7.3.2.7.2** Hose diameters of 1.5 in. (38 mm) and/or 2.0 in. (50 mm) i.d. are usually used for housekeeping purposes. Hoses should be 25 ft (7.6 m) or less in length. In most systems, the pressure losses (i.e., energy losses) through the hose represent as much as 50 percent of the overall system differential pressure requirements. If the hose diameter is too large, the flow can be insufficient to maintain transport velocity through the hose. Conversely, if the hose diameter is too small, the flow restriction of the hose can produce a low velocity in the branch line. Shorter hose lengths can be used to improve system performance, but they should be long enough to accomplish the intended tasks while avoiding the need for field modifications such as splicing or coupling hoses.

**A.7.3.2.7.3** The accumulation of static electrical charge on conductive or static-dissipative vacuum cleaning tools, hoses, and couplings can be prevented through grounding of these system components. However, there is a potential for the accumulation of static electrical charge on particulate solids that are transported through these components. Often this can pose an electrostatic ignition concern in the air-material separator AMS, which would then warrant the application of appropriate control measures. Creation of static electrical charges is of greater concern when low MIE combustible dusts are being vacuumed.

**A.7.3.2.7.4** The AMS should not be used as a combustible dust storage device due to the potential of bridging and plugging of the discharge. A rotary airlock valve can be used to provide for continuous discharge of the separated dusts; alternatively, a slide valve can be used where dust loadings are light, provided that the material is removed frequently enough to prevent bridging and plugging. The container below the rotary valve or other continuous discharge device should be designed for the type of material collected and the typical rates of material collected and to minimize the creation of aerated dusts during the discharge of the material from the AMS into the container. It is also important to maintain regular emptying or replacement of the collected material container to minimize the risk of overfilling.

**A.7.3.3** The requirements in 7.3.3 are applicable to dilute phase pneumatic conveying systems. Dense phase systems require a separate analysis.

**A.7.3.3.2** Some chemical and plastic dusts release residual flammable vapors such as residual solvents, monomers, or resin additives. These vapors can be released from the material during handling or storage. Design of the system should be based on a minimum airflow sufficient to keep the concentration of the particular flammable vapor in the airstream below 25 percent of the LFL of the vapor.

**A.7.4.3** Whether a metallic particulate reacts with water depends on particle size, chemical purity of the particulate, oxygen concentration, and combustion temperature. Consequently, an engineering analysis should be performed prior to selecting an extinguishment strategy. In some cases, a rapidly discharged high-volume water spray system has been shown to be effective, due to the rapid absorption of heat.

Metals commonly encountered in a combustible form include cadmium, chromium, cobalt, copper, hafnium, iron, lead, manganese, molybdenum, nickel, niobium, palladium, silver, tantalum, vanadium, and zinc. Although these metals are generally considered less combustible than the alkali metals (aluminum, magnesium, titanium, and zirconium), they should be handled with care when they are in finely divided form.

In many cases, water is an acceptable extinguishing agent if used properly. Many infrared spark/ember detectors are capable of detecting burning particles of these metals. Consequently, these metal particulates can often be treated as combustible particulate solids without the extremely hazardous nature of the alkali metals.

Copyright 2014 National Fire Protection Association (NFPA). Licensed, by agreement, for individual use and download on October 4, 2014 to LEADER and READER for designated user PATTARAPORN SRITRAKOOL. No other reproduction or transmission in any form permitted without written permission of NFPA. For inquires or to report unauthorized use, contact licensing@nfpa.org.



**A.7.6.3** Where a hose has a conductive, spiral reinforcing wire, the wire should be bonded to any conductive component(s) at the end(s).

**A.7.6.4** Where flexible hoses are used, they should be of the minimum length to accommodate the intended function. Most flexible hoses produce large pressure drops per unit of length, reducing efficiency.

**A.7.6.6** Whenever a duct size changes, the cross-sectional area changes as well. This change in area causes a change in air velocity in the region of the change, introducing turbulence effects. The net result is that a transition with an included angle of more than 30 degrees represents a choke when the direction of flow is from large to small and results in localized heating and static electric charge accumulation. When the transition is from small to large, the air velocity drop at the transition is usually enough to cause product accumulation at the transition and the existence of a volume where the concentration of combustible is above the MEC. It is strongly desirable to avoid both situations.

**A.7.6.7** Isolation devices in accordance with 7.1.6 are provided to prevent deflagration propagation between connected equipment. According to 7.1.6, additional protection is indicated when the integrity of a physical barrier could be breached through ductwork failure caused by a deflagration outside the equipment. In some cases, a single equipment isolation device can provide protection in both scenarios if that isolation device is installed at the physical barrier. In other cases, this concern can be addressed by strengthening the duct and supports to preclude failure.

**A.7.8.2** For information on deflagration pressure relief, see A.7.1.4.1(2).

**A.7.8.2.4** High-momentum discharges from relief valves within buildings can disturb dust layers, creating combustible clouds of dust.

**A.7.10** It is recommended that bucket elevators be located outside of buildings wherever practicable. Although explosion protection for bucket elevators is required in 7.10.1, an additional degree of protection to building occupants and contents is provided by locating the bucket elevator outside of the building.

**A.7.10.1** Where deflagration vents are used on bucket elevators, they should be distributed along the casing side in pairs, opposite each other, next to the ends of the buckets. Each deflagration vent should be a minimum of two-thirds of the cross-sectional area of the leg casing, and the vents should be located approximately 20 ft (6 m) apart. Vent closures should be designed to open at an internal gauge pressure of 0.5 psi to 1.0 psi (3.4 kPa to 6.9 kPa). Vent closure devices should be secured to eliminate the possibility of the closures becoming missiles. Vent materials should be of lightweight construction.

Bucket elevator head sections are recommended to have 5 $ft^2$ (0.5 $m^2$) of vent area for each 100 $ft^3$ (2.8 $m^3$) of head section volume.

Vents should not be directed at work platforms, building openings, or other potentially occupied areas.

For bucket elevators inside buildings, vent ducts should be designed with a cross-sectional area at least as large as the vent, should be structurally as strong as the bucket elevator casing, and should be limited in length to 10 ft (3 m). Since any bends cause increases in the pressure developed during venting, vent ducts should be as straight as possible. If bends are unavoidable, they should be as shallow angled (i.e., have as long a radius) as practicable.

**A.7.10.4.1** Methods by which this cutoff can be achieved include sensing overcurrent to the drive motor or high motor temperature.

**A.7.10.5.2** Where conductive buckets are used on nonconductive belts, bonding and grounding should be considered to reduce the hazards of static electricity accumulation. See NFPA 77, *Recommended Practice on Static Electricity*, for more information.

**A.7.10.7** Where it is desired to prevent propagation of an explosion from the elevator leg to another part of the facility, an explosion isolation system should be provided at the head, boot, or both locations.

**A.7.10.8.1** The motor selected should not be larger than the smallest standard motor capable of meeting this requirement.

**A.7.11** Explosion protection should be provided when the risk is significant. Where coverings are provided on cleanout, inspection, or other openings, they should be designed to withstand the expected deflagration pressure. *(See 7.1.4.)*

**A.7.11.2.1** Methods by which this shutoff can be achieved include sensing overcurrent to the drive motor or high motor temperature.

**A.7.12.2.1** The Committee is aware of installations of air-moving devices (electrical motor and impeller) inside the clean-air plenum of air-material separators. Standard duty air-moving devices are not suitable for such service. Because of the potential for failure of the filter medium or other malfunction, the clean-air side of air-material separators should be considered as at least a Class II, Division 2 location with regard to proper installation of electrical equipment. NFPA 91, *Standard for Exhaust Systems for Air Conveying of Vapors, Gases, Mists, and Noncombustible Particulate Solids*, also addresses air-moving device materials of construction and clearances, including specific requirements where combustible materials could be present.

**A.7.12.2.2** Some systems are designed to operate at solids concentrations that pose no fire or deflagration risk. Such systems include nuisance dust exhaust systems and the downstream side of the last air-material separator in the pneumatic conveying system.

A threshold concentration limit of 10 percent of the MEC has been set to discriminate between such systems and other systems designed to operate at a significant combustible solid loading. This limit ensures that normal variations in processing conditions do not result in the combustible particulate or hybrid mixture concentration approaching the MEC.

**A.7.12.2.3** These systems include pneumatic conveying systems that require relay (booster) fans and product dryers where the fan is an integral part of the dryer.

**A.7.12.2.5** The production of mechanical sparks is only one possible ignition mechanism from a fan or blower. Frictional heat due to contact between moving parts (misalignment) or bearing failure can present an ignition source both in the fan and downstream. Additionally, these failure mechanisms can result in a decrease in airflow through the air-moving device, which can result in an increase in the combustible dust concentration coincident with the creation of an ignition source.

**A.7.13.1.1.2** Where deflagration venting is used, its design should be based on information contained in NFPA 68, *Standard*

Copyright 2014 National Fire Protection Association (NFPA). Licensed, by agreement, for individual use and download on October 4, 2014 to LEADER and READER for designated user PATTARAPORN SRITRAKOOL. No other reproduction or transmission in any form permitted without written permission of NFPA. For inquires or to report unauthorized use, contact licensing@nfpa.org.



*on Explosion Protection by Deflagration Venting*. For deflagration relief venting through ducts, consideration should be given to the reduction in deflagration venting efficiency caused by the ducts. The ducts should be designed with a cross-sectional area at least as large as the vent, should be structurally as strong as the air-material separator, and should be limited in length. Because any bends cause increases in the pressure that develops during venting, vent ducts should be as straight as possible. If bends are unavoidable, they should be as shallow angled (i.e., have as long a radius) as practicable.

**A.7.13.1.1.2(4)** Enclosureless dust collectors are not meant for use with most dusts created during the venting of process equipment or other aerated dust sources. Fine dust will rapidly blind the filter, which results in reduced performance and a significant increase in deflagration hazards associated with the system operation and performance.

**A.7.13.1.1.2(4)(d)** Many of the enclosureless dust collectors are manifolded into multiple bags with containers. The 3000 cfm limit refers to the overall airflow through the assembly and not just to a single bag with collected material container.

**A.7.13.1.1.2(4)(h)** Enclosureless dust collectors are often manifolded into multiple bags (with collected material containers). Each such manifolded assembly must be separated by the required 20 ft or 6.1 m.

**A.7.13.1.1.2(4)(i)** MIE is determined by testing the material as received with respect to particle size.

**A.7.13.1.4** For design requirements for fast-acting dampers and valves, flame front diverters, and flame front extinguishing systems, see NFPA 69, *Standard on Explosion Prevention Systems*.

**A.7.13.1.6.3** Recommended design, maintenance, and operating guidelines for recirculation of industrial exhaust systems, as described in Chapter 7 of the ACGIH, *Industrial Ventilation: A Manual of Recommended Practice*, should be followed.

**A.7.13.1.6.3(2)** The system should be designed, maintained, and operated according to accepted engineering practice, and the air-material separator efficiency should be sufficient to prevent dust in the recycled air from causing hazardous accumulations of combustible dust in any area of the building.

**A.7.13.1.6.3(3)** OSHA has established limits on oxygen concentration in the workplace. Permissible limits range from no lower than 19.5 percent by volume to no higher than 23.5 percent by volume in air. See 29 CFR, Part 1910.146.

**A.7.13.2.3.5** See NFPA 68, *Standard on Explosion Protection by Deflagration Venting*.

**A.7.14** Abort gates cannot be relied upon to manage deflagrations. See also Annex C.

**A.7.14.1.3** The abort gate should be a high-speed device with a combined reaction time, including detection and closure, of less than 500 milliseconds.

**A.7.14.2.2.1** A powered reset is acceptable if it can only be activated manually at the damper.

**A.7.15** Size reduction machinery includes equipment such as mills, grinders, and pulverizers.

**A.7.16** Particle separation devices include screens, sieves, aspirators, pneumatic separators, sifters, and similar devices.

**A.7.16.3** For information on designing deflagration venting, see NFPA 68, *Standard on Explosion Protection by Deflagration Venting*.

**A.7.16.3.2** As a practical matter, screens are difficult to protect against explosion by deflagration venting or inerting. Therefore, it is important that screens be isolated from the fire and explosion hazards of the remainder of the process and be adequately protected against electrostatic ignition sources. Protection should be accomplished by bonding and grounding of all conductive components.

**A.7.18** Dryers include tray, drum, rotary, fluidized bed, pneumatic, spray, ring, and vacuum types. Dryers and their operating controls should be designed, constructed, installed, and monitored so that required conditions of safety for operation of the air heater, the dryer, and the ventilation equipment are maintained.

**A.7.18.9** The maximum safe operating temperature of a dryer is a function of the time–temperature ignition characteristics of the particulate solid being dried as well as of the dryer type. For short time exposures of the material to the heating zone, the operating temperatures of the dryer can approach the dust cloud ignition temperature.

However, if particulate solids accumulate on the dryer surfaces, the operating temperature should be maintained below the dust layer ignition temperature. The dust layer ignition temperature is a function of time, temperature, and the thickness of the layer. It can be several hundred degrees below the dust cloud ignition temperature. The operating temperature limit of the dryer should be based on an engineering evaluation, taking into consideration the preceding factors.

The dust cloud ignition temperature can be determined by the method referenced in U.S. Bureau of Mines RI 8798, "Thermal and Electrical Ignitability of Dusts" (modified Godbert-Greenwald furnace, BAM furnace, or other methods). The dust layer ignition temperature can be determined by the U.S. Bureau of Mines test procedure given in Lazzara and Miron, "Hot Surface Ignition Temperatures of Dust Layers."

**A.8.2.1.1** Housekeeping for fugitive dusts is most important where the operational intent is that the dust accumulations are not normally present in the occupancy and the building has no deflagration protection features, such as damage limiting/explosion venting construction or classified electrical equipment, and additional personal protection from dust deflagration hazards is not provided. Factors that should be considered in establishing the housekeeping frequency include the following:

(1) Variability of fugitive dust emissions
(2) Impact of process changes and non-routine activities
(3) Variability of accumulations on different surfaces within the room (walls, floors, overheads)

**A.8.2.1.3** Unscheduled housekeeping should be performed in accordance with Table A.8.2.1.3(a) to limit the time that a local spill or short-term accumulation of dust is allowed to remain before the local area is cleaned to less than the threshold dust mass/accumulation.

Table A.8.2.1.3(b) shows approximate equivalent depths for the accumulation values in Table A.8.2.1.3(a) when the threshold dust mass/accumulation is 0.2 lb/ft$^2$ (1 kg/m$^2$). The owner/operator can use an approximate depth to facilitate communication of housekeeping needs.

**A.8.2.1.4** When the facility is intended to be operated with more than the dust accumulation defined by the owner/operator's chosen criterion in Section 6.1, additional protective

Copyright 2014 National Fire Protection Association (NFPA). Licensed, by agreement, for individual use and download on October 4, 2014 to LEADER and READER for designated user PATTARAPORN SRITRAKOOL. No other reproduction or transmission in any form permitted without written permission of NFPA. For inquires or to report unauthorized use, contact licensing@nfpa.org.



**Table A.8.2.1.3(a) Unscheduled Housekeeping**

| Accumulation on the Worst Single Square Meter of Surface | Longest Time to Complete Unscheduled Local Cleaning of Floor-Accessible Surfaces | Longest Time to Complete Unscheduled Local Cleaning of Remote Surfaces |
|---|---|---|
| > 1 to 2 times threshold dust mass/accumulation | 8 hours | 24 hours |
| >2 to 4 times threshold dust mass/accumulation | 4 hours | 12 hours |
| >4 times threshold dust mass/accumulation | 1 hour | 3 hours |

**Table A.8.2.1.3(b) Unscheduled Housekeeping**

| Accumulation on the Worst Single Square Meter of Surface | Average Depth at 75 lb/ft$^3$ (1200 kg/m$^3$) | Average Depth at 30 lb/ft$^3$ (481 kg/m$^3$) |
|---|---|---|
| >0.2–0.4 lb/ft$^2$ (>1 to 2 kg/m$^2$) | >1/32–1/16 in. (0.8-1.7 mm) | >5/64–5/32 in. (2.1–4.2 mm) |
| >0.4–0.8 lb ft$^2$ (>2 to 4 kg/m$^2$) | >1/16–1/8 in. (1.7–3.3 mm) | >5/32 - 5/16 in. (4.2–8.3 mm) |
| >0.8 lb/ft$^2$ (> 4 kg/m$^2$) | >1/8 in. (>3.3 mm) | > 5/16 in. (>8.3 mm) |

measures are necessary. This is a concept similar to the maximum allowable quantities established in the building codes.

**A.8.2.2.4** All of the listed precautions might not be required for limited use of compressed air for cleaning minor accumulations of dust from machines or other surfaces between shifts. A risk assessment should be conducted to determine which precautions are required for the specific conditions under which compressed air is being used.

**A.8.2.2.5** Items that should be included in the housekeeping procedure include the following:

(1) A risk analysis that considers the specific characteristics of the dust being cleaned (particle size, moisture content, MEC, MIE) and other safety risks introduced by the cleaning methods used
(2) Personal safety procedures, including fall protection when working at heights
(3) PPE, including flame-resistant garments in accordance with the hazard analysis required by NFPA 2113, *Standard on Selection, Care, Use, and Maintenance of Flame-Resistant Garments for Protection of Industrial Personnel Against Flash Fire*
(4) Cleaning sequence
(5) Cleaning methods to be used
(6) Equipment, including lifts, vacuum systems, attachments, and so forth

**A.8.2.3.1** If a large quantity of material is spilled in an unclassified area, the bulk material should be collected by sweeping, by shoveling, or with a portable vacuum cleaner listed as suitable for Class II locations. Vacuum cleaners meeting the requirements in 8.2.3.2 can be used to clean up residual material after the bulk of the spill has been collected.

These requirements for portable vacuum cleaners should be applied to the use of vacuum trucks for combustible dust as well. However, there can be other safety issues concerning vacuum truck applications that are not covered within this section. Given that this application might represent a change from normal procedures, operators should also consider the guidance found in conducting a management of change evaluation.

**A.8.2.3.1(6)** Liquids or wet material can weaken paper filter elements, causing them to fail, which can allow combustible dust to reach the fan and motor.

**A.8.2.3.2** The Committee is not aware of vendors providing equipment listed for Class III electrically classified (hazardous) locations. A common practice is to use equipment listed for Class II in areas classified as Class III.

**A.9.1.2.3** Specific attention should be paid to combustible particulate solids where they are introduced into the process stream. Some sources of particulates could include stone, tramp iron, other metallic contaminants, and already burning material. Before a risk management strategy is adopted, both the particulate and the process equipment have to be carefully evaluated.

See Figure A.9.1.2.3(a) and Figure A.9.1.2.3(b) for examples of foreign material removal.

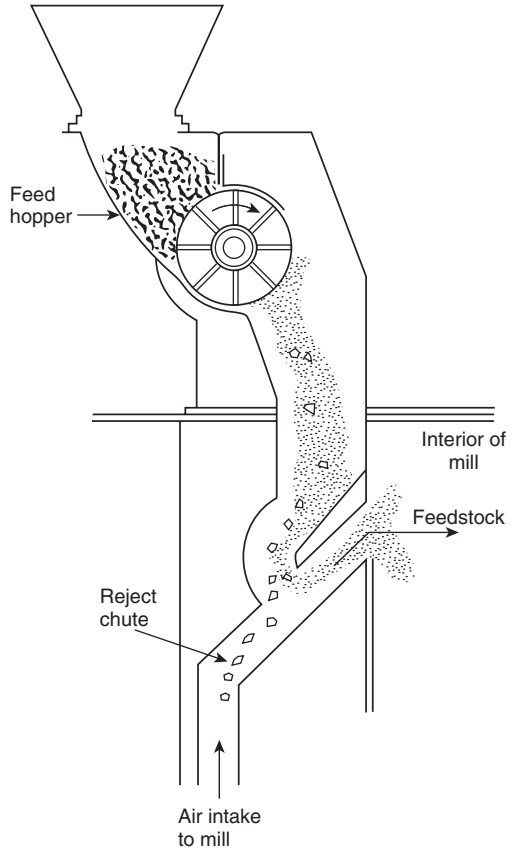


**FIGURE A.9.1.2.3(a) Pneumatic Separator.**

Copyright 2014 National Fire Protection Association (NFPA). Licensed, by agreement, for individual use and download on October 4, 2014 to LEADER and READER for designated user PATTARAPORN SRITRAKOOL. No other reproduction or transmission in any form permitted without written permission of NFPA. For inquires or to report unauthorized use, contact licensing@nfpa.org.



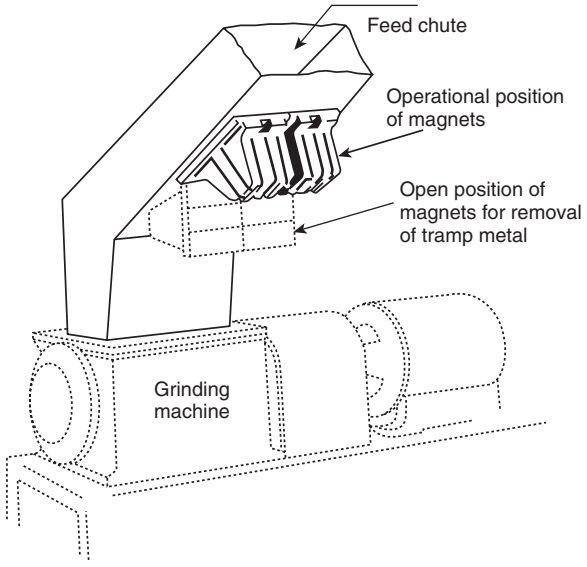


**FIGURE A.9.1.2.3(b) Magnetic Separator.**

**A.9.1.3** If the particulate particle size range includes dusts that can attain concentrations capable of propagating a flame front through a fuel–air mixture, the risk management options in 9.1.3 are appropriate. Conversely, if the analysis indicates that the particle size and concentration do not predict a propagating flame front through the fuel–air mixture, the fire protection methods in Chapter 10 should be considered.

**A.9.1.4** Transmission of power by direct drive should be used, where possible, in preference to belt or chain drives.

**A.9.1.5** Consideration should be given to the potential for overheating caused by dust entry into bearings. Bearings should be located outside the combustible dust stream, where they are less exposed to dust and more accessible for inspection and service. Where bearings are in contact with the particulate solids stream, sealed or purged bearings are preferred.

**A.9.3** See NFPA 77, *Recommended Practice on Static Electricity*, for information on this subject.

**A.9.3.2** Bonding minimizes the potential difference between conductive objects. Grounding minimizes the potential difference between objects and ground.

**A.9.3.2.2(5)** The potential for propagating brush discharges exists where nonconductive materials with breakdown voltages exceeding 4 kV are exposed to processes that generate strong surface charges such as pneumatic conveying. Such discharges do not occur where the breakdown voltage is less than 4 kV.

**A.9.3.2.3** Where the bonding/grounding system is all metal, resistance in continuous ground paths is typically less than 10 ohms. Such systems include those having multiple components. Greater resistance usually indicates that the metal path is not continuous, usually because of loose connections or corrosion. A grounding system that is acceptable for power circuits or for lightning protection is more than adequate for a static electricity grounding system.

**A.9.3.4** A more detailed description of FIBC ignition hazards can be found in IEC 61340-4-4, *Electrostatics — Part 4-4: Standard Test Methods for Specific Applications — Electrostatic Classification of Flexible Intermediate Bulk Containers (FIBC).*

**A.9.3.4.1** Induction charging of ungrounded conductive objects, including personnel, should be addressed as part of the process hazard analysis. The process hazard analysis should also consider that higher rates of transfer into and out of the FIBC increase the rate of charge generation. Consideration should also be given to the possibility of surface (cone) discharges while the FIBC is being filled, regardless of FIBC type. For additional information on these phenomena, refer to NFPA 77, *Recommended Practice on Static Electricity*. The use of internal liners in FIBCs can introduce additional electrostatic ignition hazards and should be subject to expert review prior to use.

**A.9.3.4.2.2** For this application, conductive particulate solids typically are those materials having bulk resistivity $<10^6$ ohm-m.

**A.9.3.4.3.2** See A.9.3.4.2.2.

**A.9.3.4.6** Table A.9.3.4.6 provides a useful guide for the selection and use of FIBCs based on the MIE of product contained in the FIBC and the nature of the atmosphere surrounding it.

**A.9.3.4.7** In special cases it may be necessary to use a type of FIBC that is not permitted for the intended application based on the requirements of 9.3.4. For such cases, it might be determined that the FIBC is safe to use provided that filling or emptying rates are restricted in order to limit electrostatic charging. In the case of conductive combustible particulate solids, the use of a Type A FIBC might be acceptable provided that the maximum ignition energy from the FIBC or charged product within it is less than the MIE of the combustible particulate solids.

**A.9.3.5.1** Conductive containers are generally made from either metal or carbon-filled plastic having a volume resistivity less than $10^6$ ohm-m.

**A.9.3.5.2** Induction charging of ungrounded conductive objects, including personnel, should be addressed as part of the risk evaluation and process hazard analysis when the use of nonconductive RIBC is being considered. The risk evaluation should also consider that higher rates of transfer into and out of the RIBC increase the rate of charge generation, which could result in the propagation of brush discharges or surface (cone) discharges while the RIBC is being filled. For additional information on these phenomena, refer to NFPA 77, *Recommended Practice on Static Electricity*.

**A.9.3.7** See NFPA 77, *Recommended Practice on Static Electricity*, for recommended practices on manual additions of solids into vessels containing flammable atmospheres, including recommended practices on the grounding of personnel.

**A.9.3.7.1** For example, metal chimes on fiber drums should be grounded. For uncoated fiber drums, grounding one chime might be sufficient. Where contact with a grounded operator is used to ground the container (such as with static-dissipative bags), it is important that gloves, if used, be static-dissipative and free of contaminants.

**A.9.3.7.4** Examples of auxiliary loading devices include shovels, scoops, and funnels. Conductive tools can be grounded through a properly grounded operator. See also A.9.3.7.1 for guidance related to grounding of containers.

**A.9.3.7.5** Where static-dissipative footwear is used for personnel grounding, the floor resistance to ground should be between $10^6$ and $10^9$ ohms. Care should be taken to ensure that deposits, residues, and coatings that build up over time do not impair grounding between the floor and personnel.

Copyright 2014 National Fire Protection Association (NFPA). Licensed, by agreement, for individual use and download on October 4, 2014 to LEADER and READER for designated user PATTARAPORN SRITRAKOOL. No other reproduction or transmission in any form permitted without written permission of NFPA. For inquires or to report unauthorized use, contact licensing@nfpa.org.



**Table A.9.3.4.6 Use of Different Types of FIBCs**

| Bulk Product in FIBC | Surroundings | | |
|---|---|---|---|
| MIE of Solids[a] | Nonflammable Atmosphere | Class II, Divisions 1 and 2 (1,000 mJ ≥ MIE >3 mJ)[a] | Class I, Divisions 1 and 2 (Gas Group C and D) or Class II, Divisions 1 and 2 (MIE ≤3 mJ)[a] |
| MIE > 1000 mJ | A, B, C, D | B, C, D | C, D[b] |
| 1000 mJ ≥ MIE > 3 mJ | B, C, D | B, C, D | C, D[b] |
| MIE ≤ 3 mJ | C, D | C, D | C, D[b] |

Notes:

(1) Additional precautions usually are necessary when a flammable gas or vapor atmosphere is present inside the FIBC, e.g., in the case of solvent wet solids.
(2) Nonflammable atmosphere includes combustible particulate solids having a MIE >1000 mJ.
(3) FIBC Types A, B, and D are not suitable for use with conductive combustible particulate solids.

[a]Measured in accordance with ASTM E 2019, capacitive discharge circuit (no added inductance).
[b]Use of Type C and D is limited to Gas Groups C and D with MIE ≥ 0.14 mJ.

**A.9.3.7.7** A risk evaluation should address considerations such as container construction, properties of the solids, properties of the liquid, addition rate, material construction of the receiving vessel, agitating devices, and intensity of agitation. The risk evaluation should identify the necessary engineering and administrative controls to ensure that the potential charge accumulation during dumping of the contents will not produce a discharge that exceeds the MIE of the flammable atmosphere within the vessel.

**A.9.6.1** Heating by indirect means is less hazardous than by direct means and is therefore preferred. Improved protection can be provided for direct-fired dryers by providing an approved automatic spark detection and extinguishing system.

**A.9.7** This section does not apply to electrical equipment; that topic is addressed in 6.5.2. Dust layer and dust cloud ignition temperatures should be determined by ASTM E 2021, *Test Method for Hot-Surface Ignition Temperature of Dust Layers*; ASTM E 1491, *Test Method for Minimum Autoignition Temperature of Dust Clouds*; or other recognized test methods acceptable to the authority having jurisdiction. Normally the minimum ignition temperature of a layer of a specific dust is lower than the minimum ignition temperature of a cloud of that dust; however, this is not universally true [*see* NFPA 499, *Recommended Practice for the Classification of Combustible Dusts and of Hazardous (Classified) Locations for Electrical Installations in Chemical Process Areas*]. The minimum ignition temperature typically decreases with increasing layer thickness, and testing up to maximum layer thickness to be expected on external surfaces is recommended.

The ignition temperature of a layer of dust on hot surfaces could decrease over time if the dust dehydrates or carbonizes. For organic dusts that can dehydrate or carbonize, the temperature should not exceed the lower of the ignition temperature or 329°F (165°C). The ignition temperatures for many materials are shown in NFPA 499, *Recommended Practice for the Classification of Combustible Dusts and of Hazardous (Classified) Locations for Electrical Installations in Chemical Process Areas.*

**A.9.8.2** Diesel-powered front-end loaders suitable for use in hazardous locations have not been commercially available. The following provisions can be used to reduce the fire hazard from diesel-powered front-end loaders used in Class II hazardous areas as defined in Article 500 of *NFPA 70, National Electrical Code*.

(1) Only essential electrical equipment should be used, and wiring should be in metal conduit. Air-operated starting is preferred, but batteries are permitted to be used if they are mounted in enclosures rated for Type EX hazardous areas.
(2) Where practical, a water-cooled manifold and muffler should be used.
(3) Loaders that are certified to meet the Mine Safety and Health Administration (MSHA) criteria (formerly Schedule 31) found in 30 CFR 36, "Approved Requirements for Permissible Mobile Diesel-Powered Transportation Equipment," are also acceptable in lieu of A.9.8.2(1) and A.9.8.2(2).
(4) The engine and hydraulic oil compartments should be protected with fixed, automatic dry-chemical extinguishing systems.
(5) Loaders should have a high degree of maintenance and cleaning. Frequent cleaning (daily in some cases) of the engine compartment with compressed air could be necessary. Periodic steam cleaning also should be done.
(6) Loaders should never be parked or left unattended in the dust explosion hazard or dust fire hazard area.

**A.10.2.1** Pneumatic conveying systems that move combustible particulate solids can be classified as water-compatible, water-incompatible, or water-reactive. Inasmuch as water is universally the most effective, most available, and most economical extinguishing medium, it is helpful to categorize combustible particulate solids in relation to the applicability of water as the agent of choice. For details on use of water as an extinguishing agent, see Annex F.

**A.10.3.2** Extreme care should be employed in the use of portable fire extinguishers in facilities where combustible dusts are present. The rapid flow of the extinguishing agent across or against accumulations of dust can produce a dust cloud. When a dust cloud is produced, there is always a deflagration

Copyright 2014 National Fire Protection Association (NFPA). Licensed, by agreement, for individual use and download on October 4, 2014 to LEADER and READER for designated user PATTARAPORN SRITRAKOOL. No other reproduction or transmission in any form permitted without written permission of NFPA. For inquires or to report unauthorized use, contact licensing@nfpa.org.



hazard. In the case of a dust cloud produced as a result of fire fighting, the ignition of the dust cloud and a resulting deflagration are virtually certain.

Consequently, when portable fire extinguishers are used in areas that contain accumulated combustible dusts *(refer to A.6.2.3.1)*, the extinguishing agent should be applied in a manner that does not disturb or disperse accumulated dust. Generally, fire extinguishers are designed to maximize the delivery rate of the extinguishing agent to the fire. Special techniques of fire extinguisher use should be employed to prevent this inherent design characteristic of the fire extinguisher from producing an unintended deflagration hazard.

**A.10.4.2.1** A nozzle listed or approved for use on Class C fires produces a fog discharge pattern that is less likely than a straight stream nozzle to suspend combustible dust, which could otherwise produce a dust explosion potential.

**A.10.4.2.2** Fire responders should be cautioned when using straight stream nozzles in the vicinity of combustible dust accumulations that dust clouds can be formed and can be ignited by any residual smoldering or fire.

**A.10.5** Automatic sprinkler protection in air-material separators, silos, and bucket elevators should be considered. Considerations should include the combustibility of the equipment, the combustibility of the material, and the amount of material present.

**A.10.5.1** A risk evaluation should consider the presence of combustibles both in the equipment and in the area around the process. Considerations should include the combustibility of the building construction, the equipment, the quantity and combustibility of process materials, the combustibility of packaging materials, open containers of flammable liquids, and the presence of dusts. Automatic sprinkler protection in air-material separators, silos, and bucket elevators should be considered.

**A.10.9.1** Impairments can include isolating of fire pump controllers, closing of sprinkler system control valves, and isolating and disabling or disconnecting of detection, notification, and suppression systems.

**A.10.9.2** The impairment procedure consists of identifying the impaired system and alerting plant personnel that the protection system is out of service.

**A.10.9.3** The facility manager is responsible for ensuring that the condition causing the impairment is promptly corrected.

**A.10.9.4** When the impairment notification procedure is used, it provides for follow-up by the relevant authorities having jurisdiction. This follow-up helps to ensure that impaired fire and explosion protection systems are not forgotten. When the system is closed and reopened, most companies notify their insurance company, their broker, or the authority having jurisdiction by telephone or other predetermined method.

**A.11.2.2** Where a dust explosion hazard or dust flash fire hazard exists, flame-resistant garments provide a measure of protection for exposed personnel.

**A.11.3.2(8)** All plant personnel, including management, supervisors, and maintenance and operating personnel, should be trained to participate in plans for controlling plant emergencies. Trained plant fire squads or fire brigades should be maintained.

The emergency plan should contain the following elements:

(1) A signal or alarm system
(2) Identification of means of egress
(3) Minimization of effects on operating personnel and the community
(4) Minimization of property and equipment losses
(5) Interdepartmental and interplant cooperation
(6) Cooperation of outside agencies
(7) The release of accurate information to the public

Emergency drills should be performed annually by plant personnel. Malfunctions of the process should be simulated and emergency actions undertaken. Disaster drills that simulate a major catastrophic situation should be undertaken periodically with the cooperation and participation of public fire, police, and other local community emergency units and nearby cooperating plants.

**A.11.5.1.1** Qualified contractors should have proper credentials, which include applicable American Society of Mechanical Engineers (ASME) stamps and professional licenses.

**A.11.5.4** It is suggested that annual meetings be conducted with regular contractors to review the facility's safe work practices and policies. Some points to cover include to whom the contractors would report at the facility, who at the facility can authorize hot work or fire protection impairments, and smoking and nonsmoking areas.

**A.12.1.2(5)** Process interlocks should be calibrated and tested in the manner in which they are intended to operate, with written test records maintained for review by management. Testing frequency should be determined in accordance with the AIChE *Guidelines for Safe Automation of Chemical Processes*.

**A.12.2.2.4** Periodic cleaning of components is especially important if the blower or fan is exposed to heated air.

**A.12.2.2.5** If rust is allowed to form on the interior steel surfaces, it is only a matter of time before an iron oxide (rust) becomes dislodged and is taken downstream, striking against the duct walls. In some cases, this condition could cause an ignition of combustibles within the duct. The situation worsens if aluminum paint is used. If the aluminum flakes off or is struck by a foreign object, the heat of impact could be sufficient to cause the aluminum particle to ignite, thereby initiating a fire downstream.

**A.12.2.5.3** For information on maintenance of deflagration venting, see NFPA 68, *Standard on Explosion Protection by Deflagration Venting*.

## Annex B Explosion Protection

*This annex is not a part of the requirements of this NFPA document but is included for informational purposes only.*

**B.1 General.** This annex covers the following common methods of explosion protection:

(1) Containment
(2) Inerting
(3) Deflagration venting
(4) Deflagration suppression
(5) Deflagration isolation

Copyright 2014 National Fire Protection Association (NFPA). Licensed, by agreement, for individual use and download on October 4, 2014 to LEADER and READER for designated user PATTARAPORN SRITRAKOOL. No other reproduction or transmission in any form permitted without written permission of NFPA. For inquires or to report unauthorized use, contact licensing@nfpa.org.



**B.2 Containment.** The basis for the containment method of protection is a process designed to withstand the maximum deflagration pressure of the material being handled. The equipment is designed in accordance with *ASME Boiler and Pressure Vessel Code*, Section VIII, Division 1. The final deformation pressure depends on the maximum initial pressure in the vessel prior to the deflagration. NFPA 69, *Standard on Explosion Prevention Systems*, limits the maximum initial gauge pressure to 30 psi (207 kPa) for containment vessels.

The equipment is designed either to prevent permanent deformation (working below its yield strength) or to prevent rupture with some permanent deformation allowable (working above its yield strength but below its ultimate strength). The shape of the vessel should be considered. To maximize the strength of the vessel, its design should avoid flat surfaces and rectangular shapes. The strength of welds and other fastenings should also be considered.

The major advantage of containment is that it requires little maintenance due to its passive approach to explosion protection.

The disadvantages of containment are as follows:

(1) High initial cost
(2) Weight loading on plant structure

**B.3 Inerting.** Inerting protection is provided by lowering the oxygen concentration, in an enclosed volume, below the level required for combustion. That is achieved by introducing an inert gas such as nitrogen or carbon dioxide. Flue gases can be used, but they could first require cleaning and cooling. *(See* NFPA 69, *Standard on Explosion Prevention Systems.)*

The purge gas flow and oxygen concentration in the process should be designed reliably with appropriate safety factors in accordance with NFPA 69, *Standard on Explosion Prevention Systems*. Consideration should be given to the potential for asphyxiation of personnel due to purge gas or leakage.

The major advantage of inerting is prevention of combustion, thereby avoiding product loss.

The disadvantages of inerting are as follows:

(1) Ongoing cost of inert gas
(2) Possible asphyxiation hazard to personnel
(3) High maintenance

**B.4 Deflagration Venting.** Deflagration venting provides a panel or door (vent closure) to relieve the expanding hot gases of a deflagration from a process component or room.

**B.4.1 How Deflagration Venting Works.** Except for an open vent, which allows flammable gases to discharge directly to the atmosphere, deflagration vents open at a predetermined pressure referred to as $P_{stat}$. The vent is either a vent panel or a vent door. The pressurized gases are discharged to the atmosphere either directly or via a vent duct, resulting in a reduced deflagration pressure, $P_{red}$. The deflagration vent arrangement is designed to ensure that pressure, $P_{red}$, is below the rupture pressure of the process vessel or room. This process is illustrated in Figure B.4.1.

**B.4.2 Deflagration Vent Panel.** The deflagration vent panel is a flat or slightly domed panel that is bolted or otherwise attached to an opening on the process component to be protected. The panel can be made of any material and construction that allows the panel to either rupture, detach, or swing open from the protected volume; materials that could fragment and act as shrapnel should not be used. Flat vents could require a vacuum support arrangement or a support against high winds. Domed vents are designed to have a greater resistance against wind pressure, process cycles, and process vacuums. A typical commercially available vent panel is detailed in Figure B.4.2. Such vents are either rectangular or circular.

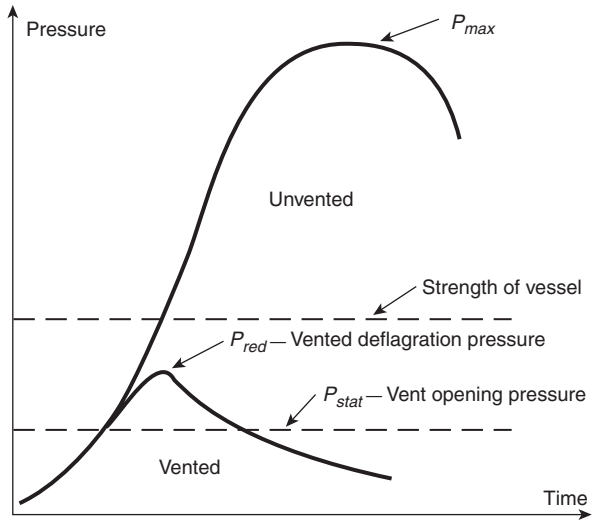


**FIGURE B.4.1 Pressure–Time Graph of a Vented Deflagration.**

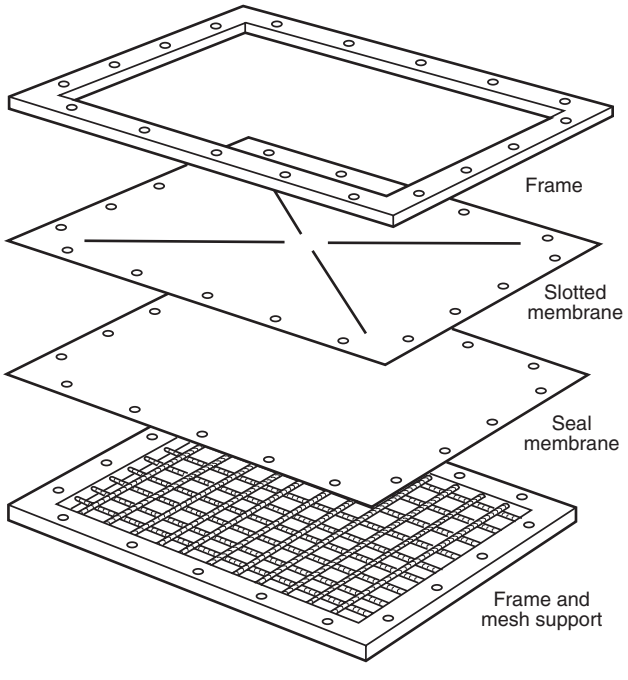


**FIGURE B.4.2 Deflagration Vent Panel and Support Grid.**

**B.4.3 Deflagration Vent Door.** A deflagration vent door is a hinged door mounted on the process component to be protected. It is designed to open at a predetermined pressure that is governed by a special latch arrangement. Generally, a vent door has a greater inertia than a vent panel, reducing its efficiency.

Copyright 2014 National Fire Protection Association (NFPA). Licensed, by agreement, for individual use and download on October 4, 2014 to LEADER and READER for designated user PATTARAPORN SRITRAKOOL. No other reproduction or transmission in any form permitted without written permission of NFPA. For inquires or to report unauthorized use, contact licensing@nfpa.org.



**B.4.4 Applications.** Deflagration vents are used for applications that handle gases, dusts, or hybrid mixtures. Typical applications include air-material separators, silos, spray dryers, bucket elevators, and mixers. Figure B.4.4 shows a typical vent panel installation on a dust collector.

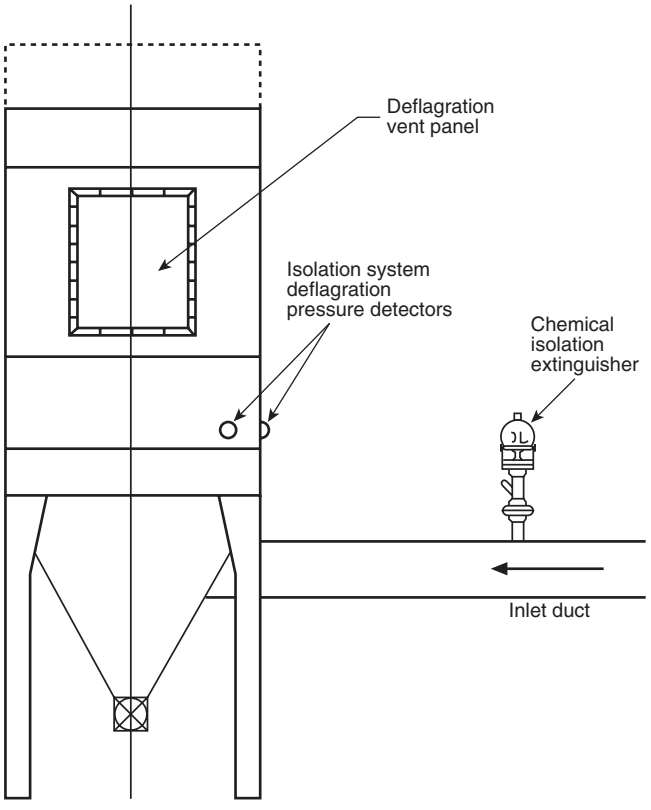


**FIGURE B.4.4 Vented Dust Collector.**

The advantages of deflagration venting are as follows:

(1) Low cost, if the process component is located outside
(2) Low maintenance due to use of passive device

The disadvantages of deflagration venting are as follows:

(1) The potential for a postventing fire within the component, particularly if combustible materials, such as filter bags, are still present
(2) The recommendation that the plant component be near an outside wall or located outside
(3) Fireball exiting a vented component, which is a severe fire hazard to the plant and personnel located in the vicinity of the deflagration vent opening
(4) Contraindication of the process for toxic or corrosive material

**B.4.5 Design Considerations.** The following points should be considered in the design and evaluation of the suitability of deflagration venting:

(1) Reaction forces
(2) Postexplosion fires
(3) Material toxicity or corrosiveness
(4) Good manufacturing practices (GMP) (food and pharmaceutical applications)
(5) Vent efficiency
(6) Connections to other process equipment
(7) Vent duct backpressure
(8) Thermal insulation
(9) Safe venting area
(10) Vacuum protection
(11) Location

**B.5 Deflagration Suppression.** Deflagration suppression involves a high-speed flame-extinguishing system that detects and extinguishes a deflagration before destructive pressures are created.

**B.5.1 How Deflagration Suppression Works.** An explosion is not an instantaneous event. The growing fireball has a measurable time to create its destructive pressures. Typically the fireball expands at speeds of 30 ft/sec (9 m/sec), whereas the pressure wave ahead of it travels at 1100 ft/sec (335 m/sec). The deflagration is detected either by a pressure detector or a flame detector, and a signal passes to a control unit, which actuates one or several high-rate discharge extinguishers. The extinguishers are mounted directly on the process to be protected, rapidly suppressing the fireball. The whole process takes milliseconds. The sequence for deflagration suppression is shown in Figure B.5.1(a).

Because the fireball is suppressed at an early stage, rupture of the vessel is prevented. Figure B.5.1(b) shows the pressure–time graph of the suppression of a starch deflagration in a 67 $ft^3$ (1.9 $m^3$) vessel. Note that the reduced deflagration gauge pressure is approximately 3.5 psi (24 kPa) in this test.

**B.5.2 Applications.** Deflagration suppression systems are used for applications that handle gases, dusts, or hybrid mixtures. Typical applications include air-material separators, silos, spray dryers, bucket elevators, and mixers. Figure B.5.2 shows a typical suppression system installation on a dust collector.

The advantages of a deflagration suppression system are as follows:

(1) Elimination of flame and reduced chance of subsequent fire
(2) Reduced risk of ejected toxic or corrosive material
(3) Flexibility in process component locations

The disadvantages of a deflagration suppression system are as follows:

(1) Generally higher cost than for deflagration venting
(2) Requirement for regular maintenance
(3) Ineffectiveness for certain metal dusts, acetylene, and hydrogen

**B.5.3 Design Criteria.** Deflagration suppression systems are designed in accordance with NFPA 69, *Standard on Explosion Prevention Systems*, and ISO 6184-4, *Explosion Protection Systems — Part 4: Determination of Efficiency of Explosion Suppression Systems*. The following information is required for design of a suppression system:

(1) Process material
(2) $K_{St}$ or $K_G$ value in psi-ft/sec (bar-m/sec)
(3) Vessel strength
(4) Vessel dimensions and volume
(5) Maximum and minimum operating pressures and temperatures
(6) Connections to other process equipment

**B.6 Deflagration Isolation.** A process component such as a dust collector or silo could be protected from an explosion by

Copyright 2014 National Fire Protection Association (NFPA). Licensed, by agreement, for individual use and download on October 4, 2014 to LEADER and READER for designated user PATTARAPORN SRITRAKOOL. No other reproduction or transmission in any form permitted without written permission of NFPA. For inquires or to report unauthorized use, contact licensing@nfpa.org.



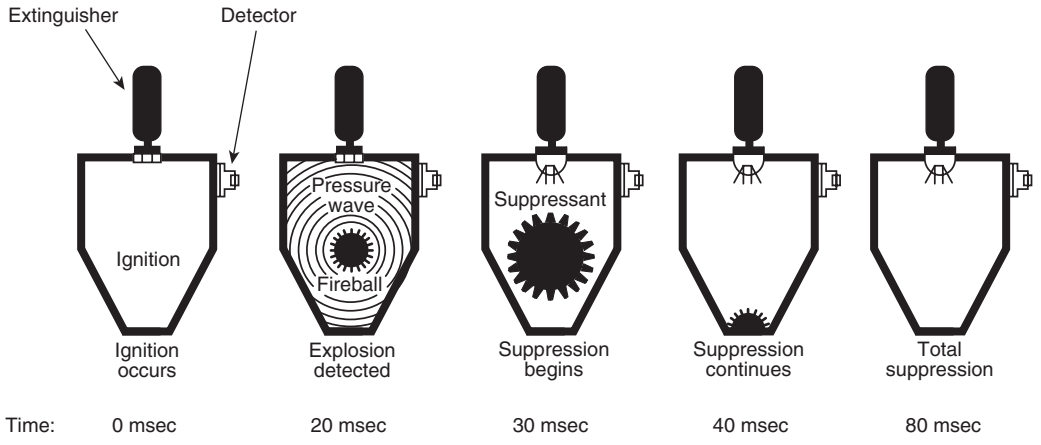


**FIGURE B.5.1(a) Deflagration Suppression Sequence of Starch in a 35 ft³ (1 m³) Vessel.**

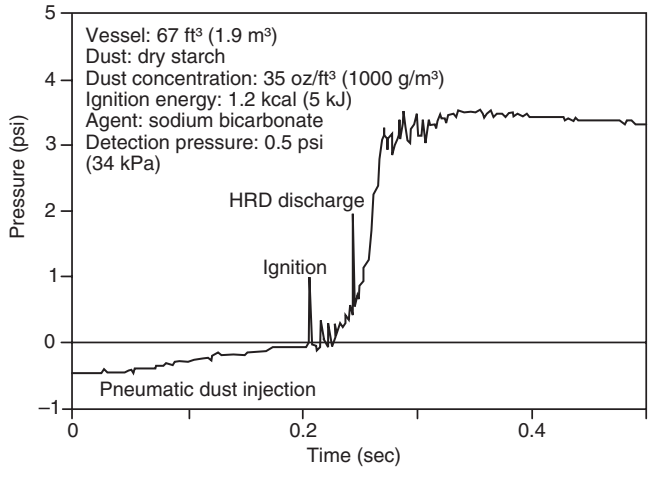


Note: Pressures are gauge pressures.

**FIGURE B.5.1(b) Pressure Versus Time in a Suppressed Deflagration.**

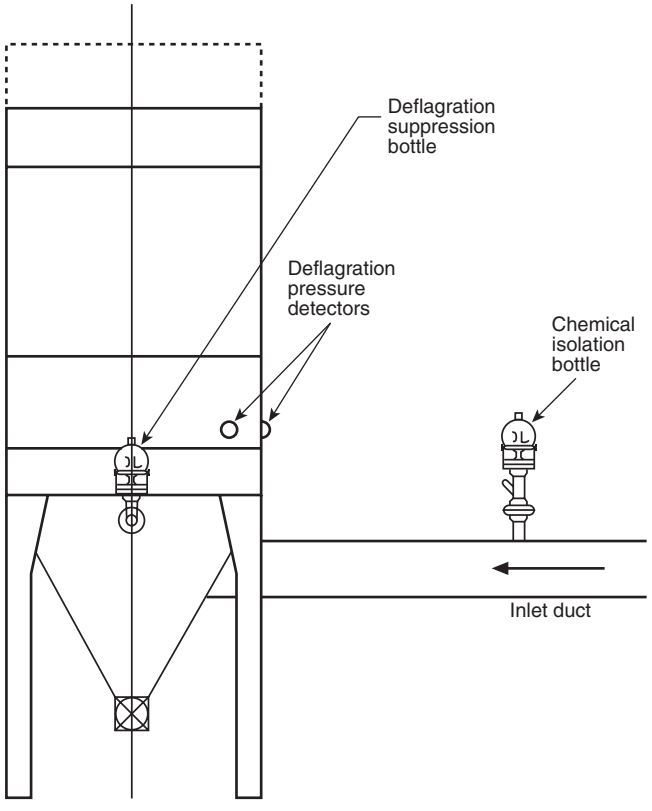


**FIGURE B.5.2 Dust Collector Suppression System.**

venting, suppression, or containment. However, its connections to other process components by pipes and ducts pose the threat of deflagration propagation. A deflagration vent on a dust collector could save it from destruction, but the inlet duct could still propagate flame to other parts of the plant. Such propagation can result in devastating secondary explosions. The importance of ducts is stated in NFPA 68, *Standard on Explosion Protection by Deflagration Venting*, which says:

Interconnections between separate pieces of equipment present a special hazard.…Where such interconnections are necessary, deflagration isolation devices should be considered, or the interconnections should be vented. [**68:**5.6.7]

Although NFPA 68, *Standard on Explosion Protection by Deflagration Venting*, indicates venting as an option for interconnections, venting is valid only when interconnected equipment is protected from explosions.

The need for isolation is further supported by research that shows that interconnecting vessels can result in precompression of gases in connected vessels caused by a deflagration. The result is that a deflagration in one vessel can produce considerably higher pressures in the connected vessel. Mechanical or chemical isolation methods should therefore be considered where interconnections between vessels are present.

**B.6.1 Mechanical Isolation.** Mechanical deflagration isolation can be provided by rotary airlock valves of suitable construction. An example of their use is at the discharge of dust collector hoppers. To be effective and to prevent the transmission of flame and burning materials, rotary airlock valves should be stopped at the moment a deflagration is detected. To be truly

Copyright 2014 National Fire Protection Association (NFPA). Licensed, by agreement, for individual use and download on October 4, 2014 to LEADER and READER for designated user PATTARAPORN SRITRAKOOL. No other reproduction or transmission in any form permitted without written permission of NFPA. For inquires or to report unauthorized use, contact licensing@nfpa.org.



effective, rotary airlock valves should be integrated into an explosion detection/protection system for the piece of equipment being protected.

Rotary airlock valves for deflagration isolation should be of rugged construction and suitable design. Such design is particularly important for pieces of equipment protected by deflagration venting and containment. This application puts more demand on the integrity of rotary airlock valves than on the components protected by suppression. The reason is that suppression extinguishes the flame in addition to mitigating the pressure.

Another example of mechanical isolation is the high-speed knife gate valve. High-speed gate valves should be capable of withstanding the maximum deflagration pressure. Typically, valves are rated for gauge pressures up to 150 psi (1035 kPa) and should be capable of closing in milliseconds. The pipework also needs to withstand the maximum deflagration pressure, $P_{max}$. Figure B.6.1 shows a typical arrangement for a high-speed gate valve. A detector, which could be a pressure switch or an optical detector, detects the deflagration pressure or flame front. The trigger then initiates the rapid valve closure to prevent the propagation of flame and pressure. If the connected piece of equipment is protected by deflagration venting or deflagration suppression, then little pressure can be expected. In such cases, the valve that isolates a connected pipe can be replaced by a chemical isolation barrier.

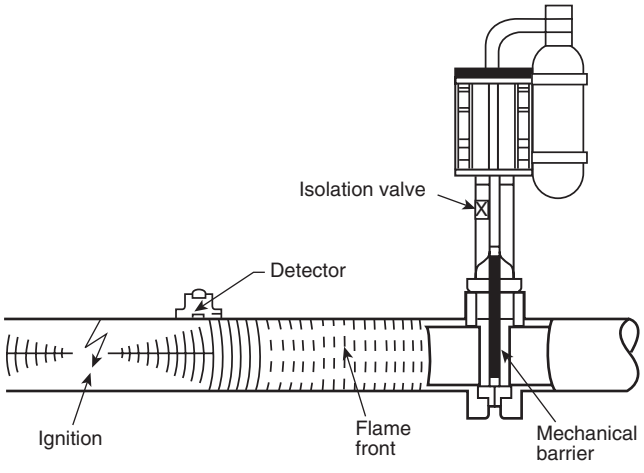


**FIGURE B.6.1 Mechanical Isolation Using a High-Speed Gate Valve.**

**B.6.2 Chemical Isolation.** Chemical isolation is achieved by the rapid discharge of a chemical extinguishing agent into the interconnecting pipe or duct. Figure B.6.2 shows a typical arrangement for chemical isolation. A deflagration detector, which could be a pressure switch or an optical detector, detects the deflagration pressure or flame front. The trigger then initiates the rapid discharge of extinguishing agent from a high-speed extinguisher bottle, thus preventing the propagation of flame and burning materials.

Chemical deflagration isolation should not be confused with ignition source (spark) suppression systems. Such systems are intended to detect burning particles traveling down a duct and extinguish them with a downstream spray of water. They are not designed to stop deflagrations once they have started and are ineffective for preventing deflagration propagation through interconnected equipment.

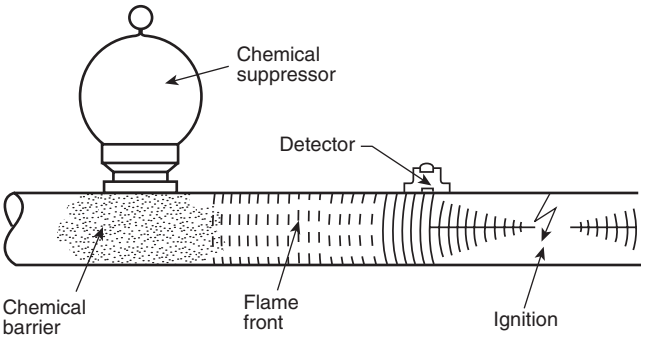


**FIGURE B.6.2 Typical Arrangement of Chemical Isolation.**

**B.7 Limitations of Flame Front Diverters.** Flame front diverters can divert deflagration flames by directing them to the atmosphere. However, these devices do have limitations. If the air-moving device is located downstream of the flame front diverter, an explosion originating upstream of the diverter can propagate past it because of the deflagration flames being sucked into the downstream side, despite the open diverter cover. Also, tests suggest that some diverters could be ineffective in completely diverting a deflagration involving a hybrid mixture whose vapors exceed the LFL, regardless of the location of the air-moving device. Nevertheless, in both situations where a flame front diverter allows propagation, the deflagration severity in the system is expected to be reduced.

## Annex C Informational Primer on Spark Detection and Extinguishing Systems

*This annex is not a part of the requirements of this NFPA document but is included for informational purposes only.*

### C.1 Primer Design Concepts for Spark Detection and Extinguishing Systems.

**C.1.1 Spark/Ember Detectors.** Spark/ember detectors are radiant energy–sensing fire detectors. The design, installation, and maintenance of radiant energy–sensing fire detectors are covered in Chapter 5 of *NFPA 72, National Fire Alarm and Signaling Code*. Where required by NFPA 654, spark detectors are used to actuate an abort gate to divert fuel, flames, and combustion gases to a safe location.

However, spark detectors are more commonly integrated into a spark detection and extinguishing system. In this second case, the extinguishment is usually an intermittent water spray designed and installed pursuant to NFPA 15, *Standard for Water Spray Fixed Systems for Fire Protection*, and maintained pursuant to NFPA 25, *Standard for the Inspection, Testing, and Maintenance of Water-Based Fire Protection Systems*. Because the overwhelming majority of the applications that employ spark/ember detectors are pneumatic conveying systems, it is appropriate to provide a primer on these devices as part of this standard.

**C.1.1.1 Actuation of Abort Gate.** When spark detectors are used to actuate an abort gate, the design concepts are fairly straightforward. The detectors are mounted on the duct upstream from the abort gate and are wired to a control panel listed and approved for that purpose. When a detector senses

Copyright 2014 National Fire Protection Association (NFPA). Licensed, by agreement, for individual use and download on October 4, 2014 to LEADER and READER for designated user PATTARAPORN SRITRAKOOL. No other reproduction or transmission in any form permitted without written permission of NFPA. For inquires or to report unauthorized use, contact licensing@nfpa.org.



a spark, the signal causes the control panel to alarm, and the solenoid or other releasing device on the abort gate is energized. This type of system is shown in Figure C.1.1.1.

**C.1.1.2 Spark Detection and Extinguishing Systems.** Spark detection and extinguishing systems usually consist of a group of detectors that are located on the conveying duct, a control panel in a safe accessible location, and an extinguishment solenoid valve and nozzle set located on the duct downstream from the detectors. Such a system is shown in Figure C.1.1.2.

When a spark or ember enters the detector(s), the detector responds with an alarm signal that actuates the extinguishing system valve, establishing an extinguishing concentration of water before the spark arrives. The water spray is maintained for a time period long enough to ensure extinguishment and is then turned off. This feature minimizes the quantity of water injected into the duct. The pneumatic conveying system is not shut down; it continues to run. Each time a spark comes down the duct, it is quenched.

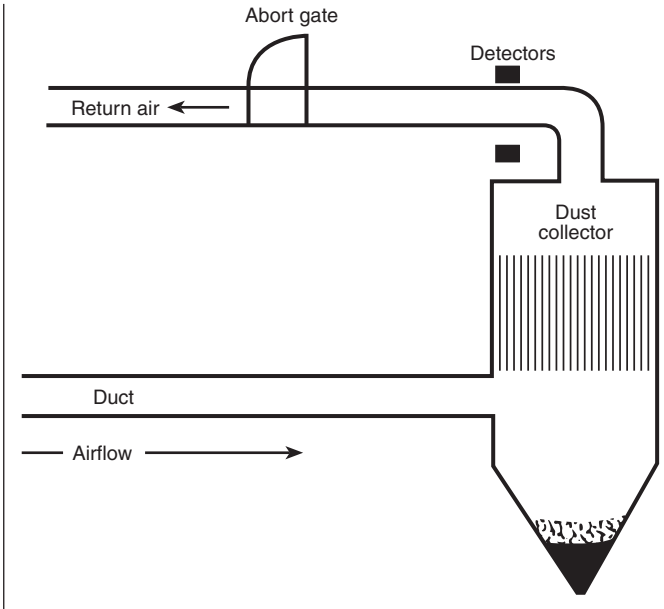


**FIGURE C.1.1.1 Spark Detectors and Abort Gate.**

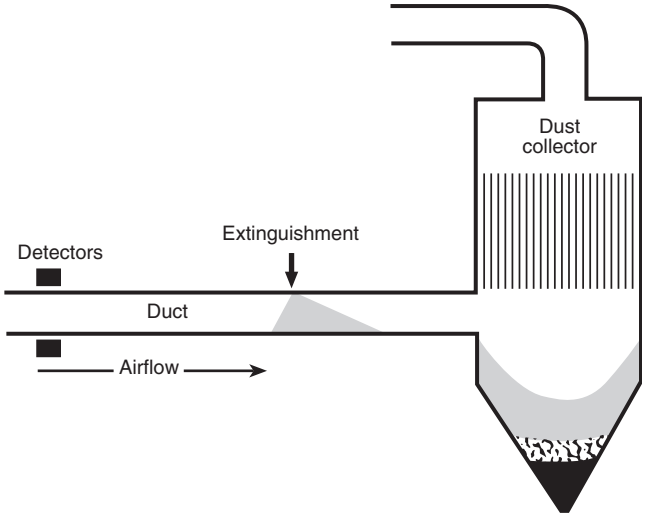


**FIGURE C.1.1.2 Typical Spark Detection and Extinguishing System.**

**C.1.2 Critical Design Concepts.** For both system design concepts, several critical factors should be addressed if they are to work. First, the detector should be able to reliably detect a spark, an ember, or a flame. Second, the alarm signal should be processed quickly. The timing should be predictable enough to allow the abort gate to operate or to allow the extinguishing system sufficient time to establish the water spray. Finally, in the case of the extinguishing system, there should be a provision to reapply the water spray extinguishment repetitively. The occurrence of an individual, isolated spark is rare; usually sparks are produced in a burst or stream. The extinguishing system should be able to reactivate as each successive spark is detected. Unless all these concerns are addressed, spark/ember detection and extinguishment cannot be used as usually supplied.

**C.1.2.1 Spark Detector Reliability.** The first concern regarding a spark/ember detector is its ability to detect a spark, ember, or fire. *NFPA 72, National Fire Alarm and Signaling Code*, defines a spark as "a moving ember" and defines an ember as "a particle of solid material that emits radiant energy due either to its temperature or the process of combustion on its surface." Figure C.1.2.1 shows the radiation intensity as a function of wavelength for an oak ember and a gasoline flame.

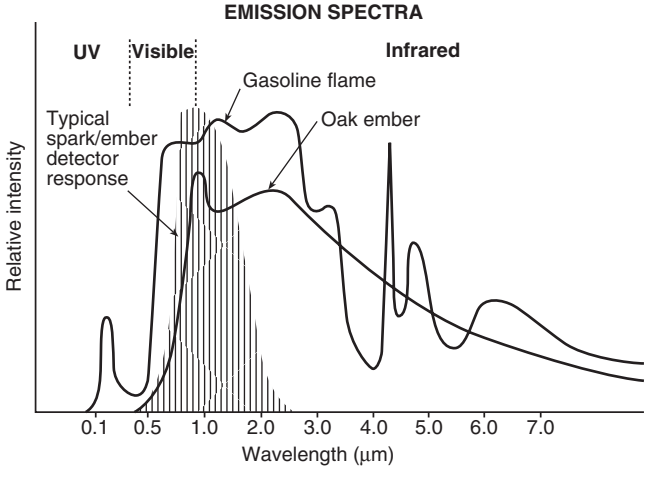


**FIGURE C.1.2.1 Emissions of an Oak Ember and Gasoline Flame Compared to the Spectral Sensitivity of a Spark/Ember Detector.**

The spectral sensitivity of the typical spark/ember detector is superimposed on the graph in Figure C.1.2.1. One can see that the spark/ember detector will sense the radiation from both an ember (spark) and a flame.

**C.1.2.2 Detector Sensitivity and Speed.** The second concern regarding the detectability of a spark or flame in a duct is the sensitivity and speed of the detector. Because the detector is designed to be mounted on a duct that is dark, silicon photodiode sensors can be used, and there will be few, if any, sources

Copyright 2014 National Fire Protection Association (NFPA). Licensed, by agreement, for individual use and download on October 4, 2014 to LEADER and READER for designated user PATTARAPORN SRITRAKOOL. No other reproduction or transmission in any form permitted without written permission of NFPA. For inquires or to report unauthorized use, contact licensing@nfpa.org.



of spurious alarm within the duct. The sensors allow the detectors to be made both extremely sensitive and extremely fast. Sensitivities of 1.0 μW and speeds of 100 microseconds are common. The result is a detector that can detect a spark the size of a pinhead moving faster than the speed of sound. The outcome is that both sparks and flames are easily detected in pneumatic conveying systems with modern spark/ember detectors.

**CAUTION:** Spark/ember detectors are motion sensitive. If the fire is moving too slowly, the typical spark/ember detector might not detect it. In general, spark/ember detectors do not detect a stationary ember or flame.

Another consideration is the absolute necessity for a predictable amount of time between the detection of the spark and the actuation of the abort gate or the establishment of the water spray extinguishing concentration. The response times of the detector, control panel, and solenoid valve are known, verified, and extremely reliable. However, unless the arrival time of the spark at the abort gate or extinguishing water spray is equally predictable, these systems are not appropriate.

The arrival time of the spark is a function of the conveying system air speed and the distance between the detector and the extinguishing system. Most spark detection and extinguishing systems provide designers a formula to compute the required distance between the detectors and the abort gate or extinguishment. Generally, it is in the following form:

$$\begin{pmatrix}\text{Air}\\ \text{speed}\end{pmatrix}\times\begin{pmatrix}\text{System}\\ \text{factor}\end{pmatrix}=\begin{matrix}\text{Distance between detectors}\\ \text{and extinguishment}\end{matrix}$$

The air speed and hence the ember speed should be both constant and controlled. It is this necessity that established the requirement that the combustible concentration be less than one-half the LFL or MEC. If the combustible concentration exceeds the LFL or MEC, a deflagration can result from the introduction of a spark. The speed of the flame front equals the sum of the flame front velocity for that combustible at that concentration plus the nominal air velocity of the conveying system. The deflagration flame front would pass the abort gate before it had opened or would pass the extinguishment before the valve had opened and established a spray pattern. That is why the criteria regarding combustible concentration are so important. A spark detection system on a conveying line where the concentrations are above the LFL or MEC cannot be expected to make a meaningful contribution to the survival of the site or its occupants should a deflagration occur.

**C.1.2.3 Control Panel Design.** The third concern regarding these systems involves the extinguishing component. Because the cause of the first spark usually causes additional sparks, the control panel should be designed for the successive and repetitive reapplication of the extinguishing agent. This type of function is not found in the average fire alarm control panel. Specially designed control panels for spark detection and extinguishment are the norm.

### C.2 System Basics.

**C.2.1 General.** This standard requires the use of spark detection systems in those installations in which conveying air is being returned to the building. It requires that the spark detection be used to activate an abort gate, diverting the airstream to outside ambient air. This requirement is a critical life safety and property conservation measure. Sparks entering an air-material separator are apt to initiate a deflagration. If the abort gate is not activated, the flames and combustion gases would be conveyed back into the facility, igniting secondary fires and posing a serious threat to the occupants. Figure C.2.1 is a diagram of this type of system.

**C.2.2 Dual Detectors.** Because spark detectors have limited fields of view, most systems require two detectors to cover a round duct. Both detectors are usually situated at the same duct diameter located on the discharge side of the collector, as shown in Figure C.2.1. This system is the only type of spark detection system required by this standard. However, because it is a minimum compliance standard, additional measures are allowed.

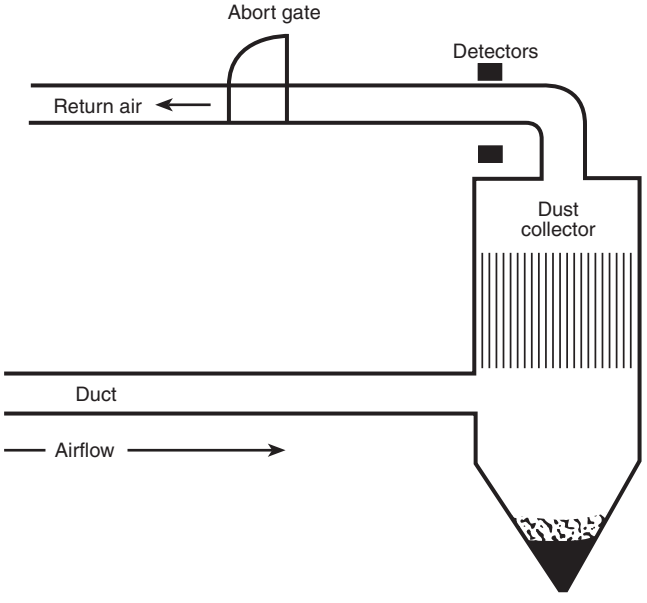


**FIGURE C.2.1 Minimum Compliance Spark Detection System.**

**C.2.3 Limitations of Minimum Compliance Approach.** The problem with the minimum compliance approach is that it can often reduce the productivity of the site. When a spark is detected, the abort gate transfers. The air-handling system then should be shut down to restore the abort gate to the normal position. This shutdown could require an hour of production time. If a spark is a rare occurrence, this is not a serious problem. However, in many systems, sparks are a common occurrence. For example, in a woodworking facility, one could expect several sparks per day. Obviously, a system that shuts down the facility for an hour several times a day is not a viable system.

**C.2.4 Approach to Minimize Shutdowns.** The use of a spark detection and extinguishing system on the inlet to the air-material separator is an extremely effective way of preventing production stoppages. This type of system mounts a second zone of spark detectors on the pneumatic conveying duct far enough upstream to allow the installation of an intermittent water spray extinguishing system on the inlet duct prior to entry into the primary air-material separator. This spark detection and extinguishing system quenches each spark as it comes down the duct, before it reaches the air-material separator. A properly designed and installed spark detection and extinguishing system is very effective in preventing ignitions in the air-material separator. The spark detector that actuates the abort gate is moved to the outlet of the air-material separator, providing a secondary detection. This type of system is shown in Figure C.2.4.

Copyright 2014 National Fire Protection Association (NFPA). Licensed, by agreement, for individual use and download on October 4, 2014 to LEADER and READER for designated user PATTARAPORN SRITRAKOOL. No other reproduction or transmission in any form permitted without written permission of NFPA. For inquires or to report unauthorized use, contact licensing@nfpa.org.



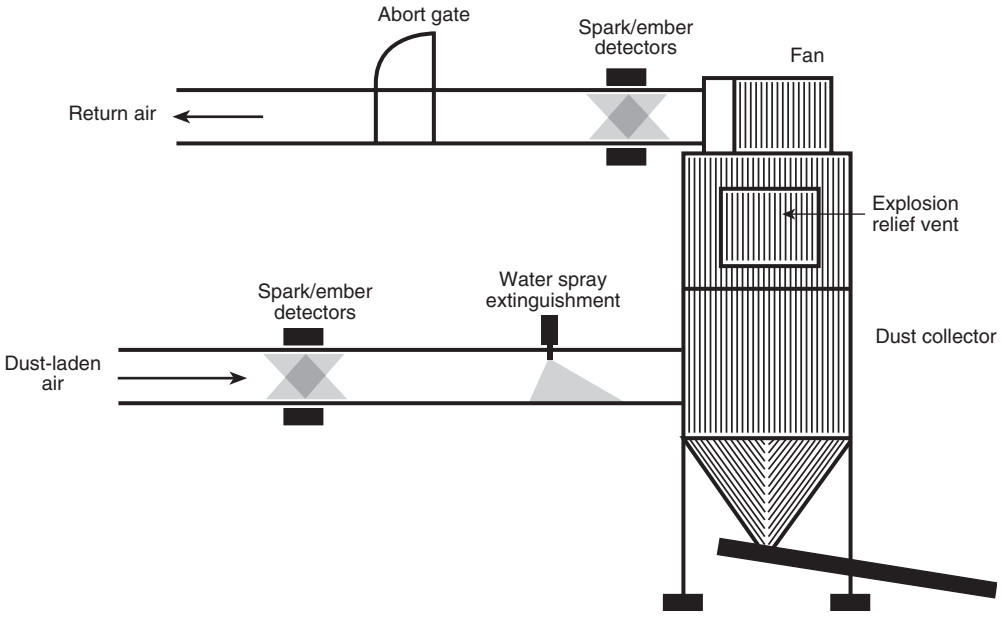


**FIGURE C.2.4 Basic Spark Detection and Extinguishing System for a Single Air–Material Separator.**

**C.2.5 Additional System Features.** The spark detection and extinguishing system involves more than just detectors and a water spray. To provide the degree of performance necessitated by the application, the system should require a number of additional system attributes.

First, the detectors should be listed and approved to operate in conjunction with the control panel and the water spray extinguishing unit. All three components should be listed as a system. The nozzles that are used are specifically designed for this type of service; they are not off-the-shelf sprinkler heads. The solenoid valve is specifically matched to the control panel to ensure a uniform, predictable response time.

The operating requirements of a spark detection and extinguishing system call for additional features. The windows or lenses of detectors can become scratched, broken, or coated with material, reducing their sensitivity. Consequently, a means should be provided to measure the sensitivity of the detectors to ensure that they are capable of detecting sparks after the initial installation tests. The sensitivity measurement capability is required by *NFPA 72, National Fire Alarm Code*. If the material is discovered to cling to the interior surfaces of the duct, a means to keep the detector window/lens clean is required by *NFPA 72*. This usually involves an air-purging option that bathes the detector window/lens with clean air.

To work reliably, the extinguishing system should have a strainer (required by NFPA 15, *Standard for Water Spray Fixed Systems for Fire Protection*) to prevent pipe scale from clogging the nozzle. The water supply should be reliable and supervised with a pressure switch. Because the extinguishing system components are mounted on a duct that could be outdoors, freeze prevention measures should be implemented. Antifreeze solutions are not a viable option on extinguishing systems that are expected to operate regularly. Consequently, heat tracing should be thought of as a mandatory constituent of the system along with thermostats to turn the heat trace on and to warn of impending freeze-up.

Finally, desirable system components such as system testing, event recording, and flow indicators should be considered as part of any system.

## Annex D Dust Layer Characterization and Precautions

*This annex is not a part of the requirements of this NFPA document but is included for informational purposes only.*

**D.1** The threshold mass equations in Section 6.1 provide a means to determine whether the normal accumulation of combustible dust in the building/room requires the addition of a safeguard for workers in the immediate area or a safeguard for workers remote from the immediate area. This is similar to the concept of maximum allowable quantity in control areas in building codes. Above the maximum quantity, the area is considered hazardous, and additional safeguards are required. *NFPA 5000, Building Construction and Safety Code*, indicates in Chapter 6 that when combustible dusts are stored, used, or generated in a manner creating a severe fire or explosion hazard the building/room would be considered to contain High Hazard Level 2 contents.

This document acknowledges that accumulation of combustible dust external to equipment can present a severe hazard when the quantity exceeds certain thresholds. When the threshold is exceeded, this document imposes physical barriers and explosion venting to limit and control the explosion hazard, as well as personal protective equipment and fire separations to address the flash fire hazard.

In addition to the many process design constraints intended to limit ignition potential, use of proper electrical equipment is separately addressed. It is important to recognize that the criteria for requiring electrically classified equipment are different from the thresholds for flash fire or explosion hazard. For example, in a single room the total dust accumulation could be large enough that the entire room is deemed an explosion hazard area, yet if the dust accumulation is evenly distributed, it is possible that electrically classified equipment is not needed. Conversely, there could be an isolated area with thick layers of dust that would require the installation of electrically classified equipment even though the room, in total, does not contain sufficient dust accumulation to exceed the threshold mass.

Copyright 2014 National Fire Protection Association (NFPA). Licensed, by agreement, for individual use and download on October 4, 2014 to LEADER and READER for designated user PATTARAPORN SRITRAKOOL. No other reproduction or transmission in any form permitted without written permission of NFPA. For inquires or to report unauthorized use, contact licensing@nfpa.org.



**D.2 Layer Depth Criterion Method.** The dust accumulation is a product of the actual layer depth and the total area of accumulation. The limitations in 6.1.3.2(1) and (3) are expressed as a product of the layer depth criterion and a percentage of the footprint area of the room or building. Within a single room or building, areas of significant dust accumulation can be nonseparated or separated. When they are nonseparated, the accumulations are combined and compared to the permissible dust accumulation. When accumulations are segregated, detached, or separated in accordance with Section 6.2, the accumulations are individually compared to the permissible dust accumulation. The layer depth criterion can be increased for a specific dust when the bulk density is known. For rooms or buildings where dust accumulations are limited to a small area, one way to determine if the actual dust accumulation is sufficient to result in a dust deflagration hazard is to ratio the actual dust accumulation to the permissible dust accumulation. If the ratio exceeds 1, then a dust deflagration hazard exists in the subject building or room.

Surfaces where dust could settle include floors, beam flanges, piping, ductwork, equipment, suspended ceilings, light fixtures, and walls. Particular attention should be given to dust adhering to walls and vertical surfaces because it can be easily dislodged.

When determining the total volume of dust accumulations, accumulation areas where the surface color is discernible can be excluded.

*Example 1*: A single floor accumulation area in a small portion of a 25 ft × 40 ft room. The dust has a bulk density of 75 lb/ft$^3$.

Layer depth criterion = 1/32 in.

Room footprint area = 1000 ft$^2$

Actual accumulation area = 20 ft$^2$

Average layer depth in accumulation area = 1/16 in.

$$Ratio = \frac{20\ \text{ft}^2 \cdot 1/16\ \text{in.}}{0.05 \cdot 1000\ \text{ft}^2 \cdot 1/32\ \text{in.}} = \frac{1.3\ \text{ft}^2\text{-in.}}{1.6\ \text{ft}^2\text{-in.}} \le 1$$

Since the ratio is less than or equal to 1, a dust deflagration hazard does not exist in the room. When the actual accumulation area is less than 5 percent of the room footprint, the layer thickness can be greater without resulting in a dust deflagration hazard.

*Example 2*: A single floor accumulation area in a portion of a 25 ft × 40 ft room. The dust has a bulk density of 30 lb/ft$^3$. First adjust the layer depth criterion for the reduced bulk density.

$$Layer\ depth\ criterion = \frac{1/32\ \text{in.} \cdot 75\ \text{lb/ft}^3}{30\ \text{lb/ft}^3} = 0.078\ \text{in.} \cong \frac{1}{16}\ \text{in.}$$

Room footprint area = 1000 ft$^2$

Actual accumulation area = 100 ft$^2$

Average layer depth in accumulation area = 1/32 in.

$$Ratio = \frac{100\ \text{ft}^2 \cdot 1/32\ \text{in.}}{0.05 \cdot 1000\ \text{ft}^2 \cdot 0.78\ \text{in.}} = \frac{3.1\ \text{ft}^2\text{-in.}}{3.9\ \text{ft}^2\text{-in.}} \le 1$$

Since the ratio is less than or equal to 1, a dust deflagration hazard does not exist in the room. A dust with a bulk density less than the basis 75 lb/ft$^3$ can accumulate to 1/32 in. layer depth in more than 5 percent of the room footprint area and still not present a dust deflagration hazard.

*Example 3*: Multiple floor level and elevated accumulation areas with different layer depths for each area. The room is 100 ft × 100 ft. The dust has a bulk density of 30 lb/ft$^3$. First adjust the layer depth criterion for the reduced bulk density.

**Table D.2(a) Multiple Accumulation Areas for Example 3**

| Accumulation Location | Accumulation Area (ft$^2$) | Average Layer Depth (in.) | Accumulation (ft$^2$-in.) |
|---|---|---|---|
| Floor | 50 | 1/16 | 3.1 ft$^2$-in. |
| Beam surfaces | 500 | 1/32 | 15.6 ft$^2$-in. |
| Equipment surfaces | 100 | 1/8 | 12.5 ft$^2$-in. |

$$Layer\ depth\ criterion = \frac{1/32\ \text{in.} \cdot 75\ \text{lb/ft}^3}{30\ \text{lb/ft}^3} = 0.078\ \text{in.} \cong \frac{1}{16}\ \text{in.}$$

Room footprint area = 10,000 ft$^2$

$$Ratio = \frac{50\ \text{ft}^2 \cdot 1/16\ \text{in.} + 500\ \text{ft}^2 \cdot 1/32\ \text{in.} + 100\ \text{ft}^2 \cdot 1/8\ \text{in.}}{0.05 \cdot 100{,}000\ \text{ft}^2 \cdot 0.078\ \text{in.}}$$

$$= \frac{31\ \text{ft}^2\text{-in.}}{39\ \text{ft}^2\text{-in.}} \le 1$$

Since the ratio is less than or equal to 1, a dust deflagration hazard does not exist in the room. There could be many more separated accumulation areas than listed in Table D.2(a), and all significant areas should be included. Note that areas where the surface color is discernible beneath the dust layer would not be included.

When there is a single accumulation area or the actual layer depth is the same over all accumulation areas, Figure D.2 indicates the actual layer depth that results in a dust deflagration hazard.

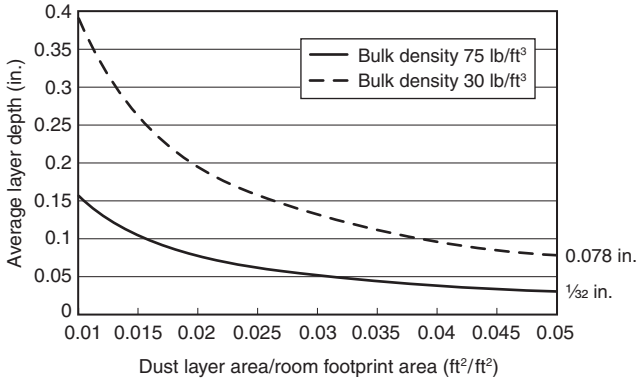


**FIGURE D.2 Layer Depth Producing Dust Deflagration Hazard**

*Example 4*: Machining operation resulting in piles of dust accumulations. The machining operation is located in a 10 ft × 10 ft area in a 100 ft × 100 ft room. Between periodic housekeeping, the machining operation results in three 12 in. × 12 in. × 16 in. high piles of dust with a bulk density of 40 lb/ft$^3$ and a uniform dust layer thickness throughout the room of less than 1/64 in.

Room footprint area = 10,000 ft$^2$

Actual accumulation area = 100 ft$^2$

Copyright 2014 National Fire Protection Association (NFPA). Licensed, by agreement, for individual use and download on October 4, 2014 to LEADER and READER for designated user PATTARAPORN SRITRAKOOL. No other reproduction or transmission in any form permitted without written permission of NFPA. For inquires or to report unauthorized use, contact licensing@nfpa.org.



(1) Determine adjusted layer depth criterion:

Layer depth criterion = (1/32 in. · 75lb/ft$^3$)/40 lb/ft$^3$ = 0.059 in.

(2) Determine the allowable volume of dust:

Allowable volume of dust = 0.05 · 10,000 ft$^2$ 0.059 in. · 1 ft/12 in. = 2.46 ft$^3$

(3) Determine the actual volume of dust (The layer of dust less than 1/64 in. does not need to be factored into the calculation.):

(4) Volume of dust per pile = (12 in. × 12 in. × 16 in.) · 1 ft$^3$/1728 in.$^3$ = 1.33 ft$^3$

Total volume of dust = 3 · 1.33 lb = 4 ft$^3$

The total volume of dust exceeds the allowable volume of dust; therefore, a dust deflagration hazard exists.

The limitations in 6.1.3.2(2) and (4) are expressed as a product of the layer depth criterion and a maximum 1000 ft$^2$ area. For a building or room with a footprint larger than 20,000 ft$^2$, the 1000 ft$^2$ dust accumulation area and equivalent volume become limiting in determining whether a deflagration hazard area exists. Table D.2(b) provides guidance for evaluating isolated accumulations of dust in a building larger than 20,000 ft$^2$. These types of accumulations commonly occur due to leaks in equipment and machining operations. Table D.2(b) lists various areas of nonseparated accumulation and the corresponding layer depth criterion. It assumes a bulk density of 75 lb/ft$^3$ and a rectangular shaped accumulation. The layer depth can be adjusted for bulk density.

**Table D.2(b) Corresponding Layer Depths for Nonseparated Accumulations**

| Dust Accumulation Area (ft$^2$) | Layer Depth Criterion (in.) |
|---|---|
| 1000 | 1/32 |
| 100 | 0.3 |
| 50 | 0.6 |
| 25 | 1.3 |
| 16 | 2.0 |
| 9 | 3.5 |
| 4 | 7.8 |
| 2 | 15.7 |

*Example 5*: Processing operation with several areas of accumulation. The building area is 350 ft × 150 ft. There are three accumulation areas:

(1) 15 ft × 100 ft mezzanine with ½ in. dust accumulation
(2) 50 ft × 150 ft area with ⅛ in. dust accumulation at east end
(3) 15 ft × 10 ft area with 1½ in. average depth at west end

The dust has bulk density of 2 lb/ft$^2$.

Room footprint area = 350 ft × 150 ft = 52,500 ft$^2$ (Note: The mezzanine area does not increase the room footprint area.)

(1) Determine adjusted layer depth criterion-Layer depth criterion = (1/32) in.·75 lb/ft$^3$)/2 lb/ft$^3$ = 1.17 in.
(2) Determine the allowable volume of dust (limited to 1000 ft$^2$ because the total room footprint exceeds 20,000 ft$^2$). Allowable volume of dust = 1000 ft$^2$ · 1.17 in. · 1 ft/12 in. = 97.5 ft$^3$
(3) Determine the actual volume of dust.
    (a) Volume of mezzanine dust = 1500 ft$^2$ · ½ in. · 1 ft/12 in.$^2$ = 62.5 ft$^3$
    (b) Volume of east end dust = 7500 ft$^2$ · ⅛ in. · 1 ft/12 in.$^2$ = 78.13 ft$^3$
    (c) Volume of west end dust = 150 ft$^2$ · 1½ in. · 1 ft/12 in.$^2$ = 18.75 ft$^3$
(4) Total volume of dust = 62.5 ft$^3$ + 78.13 ft$^3$ + 18.75 ft$^3$ = 159.4 ft$^3$

The total volume of dust exceeds the allowable volume of dust; therefore, a dust deflagration hazard exists.

**D.3 Mass Methods A and B.** The user can apply both of the mass method A equations in 6.1.4.1 and 6.1.4.2 to separately determine if an explosion hazard or a flash fire hazard from total accumulated dust mass exists in the building/room. If a hazard does exist, then safeguards are required for workers remote from the area for an explosion hazard or in the immediate area for a flash fire hazard. Alternatively, the user can apply both of the mass method B equations in 6.1.5.1 and 6.1.5.2 to separately determine if an explosion hazard or a flash fire hazard from total accumulated dust mass in the building/room exists.

When the dust accumulations are nonseparated, the accumulations are combined and compared with the permissible dust accumulation. When accumulations are segregated, detached, or separated in accordance with Section 6.2, the accumulations are individually compared with the permissible dust accumulation.

The equations for mass method A, in 6.1.4.1 and 6.1.4.2, do not require measurement of any physical or combustibility properties for application. They are independent of those properties and offer a generally conservative approach. The only variables are the total building/room floor area and the general height of the building/room, which provide a volume correction. In practice, the user can weigh the amount of accumulated dust in various areas external to equipment to estimate the total dust mass in the building/room. If the dust mass exceeds the threshold determined according to 6.1.4.1, then the area is a dust explosion hazard area. If the dust mass exceeds the threshold determined according to 6.1.4.2, then the area is a dust flash fire hazard area. Depending on building height, the area of dust accumulation could be a dust explosion hazard area, a dust flash fire hazard area, or both.

The equations for mass method B, in 6.1.5.1 and 6.1.5.2, require not only combustibility properties of the dust but also, for the equation in 6.1.5.1, information about the building/room strength against explosions. With this information, it is possible to be more accurate when evaluating the potential hazards created by the dust accumulation.

An example application is a 1000 m$^2$ building, having a peaked roof with eave height of 9 m and peak height of 10 m. The owner/user expects only minor dust accumulation near certain activities and has provided electrically classified equipment in these limited areas. When operations began, a routine housekeeping schedule was documented and instituted to minimize dust accumulation. After 2 months of operation the owner/user weighed dust samples from six different areas in the plant, as listed in Table D.3.

Based on the weighed samples, the user multiplied the mass per unit area by the estimated floor area for the samples and estimated the weight of dust in each section of the plant. As a result, the user determined that practicable housekeeping allowed the dust to accumulate to about 60 kg over the building.

Copyright 2014 National Fire Protection Association (NFPA). Licensed, by agreement, for individual use and download on October 4, 2014 to LEADER and READER for designated user PATTARAPORN SRITRAKOOL. No other reproduction or transmission in any form permitted without written permission of NFPA. For inquires or to report unauthorized use, contact licensing@nfpa.org.



**Table D.3 Example Dust Sample Results.**

| Section | Floor Area ($m^2$) | Above Floor Area ($m^2$) | Sampled Area ($m^2$) | Sampled Weight (kg) | Estimated Weight (kg) |
|---|---|---|---|---|---|
| Bag unloading | 20 | — | 2 | 0.5 | 5 |
| Processing | 600 | — | 4 | 0.05 | 7.5 |
| Packaging | 180 | — | 3 | 0.65 | 39 |
| Shipping | 200 | — | 4 | 0.05 | 2.5 |
| Bar joist | — | 50 | 2 | 0.1 | 2.5 |
| Mezzanine | — | 105 | 3 | 0.1 | 3.5 |
| Total | 1000 | — | — | — | 60 |

According to the equations in 6.1.4.1 and 6.1.4.2, the threshold masses are 38 kg for an explosion hazard area and 20 kg for a flash fire hazard area.

$$M_{basic-\exp} = 0.004 \cdot A_{floor} \cdot H = 0.004 \cdot 1000 m^2 \cdot 9.5 m = 38 kg$$

$$M_{basic\text{-}fire} = 0.02 \cdot A_{floor} = 0.02 \cdot 1000 \text{ m}^2 = 20 \text{ kg}$$

Practicable housekeeping has resulted in too much dust without additional safeguards, and the owner/user would have to modify equipment to better contain the dust or provide the additional prescribed safeguards. The owner/user could decide to proceed with the results of the basic equations without further evaluation. However, since the building is new, the design information is readily available, and the owner/user decides to evaluate the current dust accumulation using the equations in 6.1.5.1 and 6.1.5.2.

The building is constructed of pre-engineered columns with metal siding on steel girts. The girts stabilize the columns, and fail at 75 lb/ft$^2$ (0.036 bar) internal pressure. The metal siding is designed for 35 lb/ft$^2$ (0.017 bar) internal pressure; however, the owner/user determines there is nothing of importance mounted to the metal siding. It is the owner/user's choice to accept potential siding damage during an explosion. A sample of the accumulated dust was tested according to ASTM E 1226 and has a $K_{St}$ of 150 bar-m/sec, $P_{max}$ of 7 bar, and $C_w$ of 0.60 kg/m$^3$. See Figure D.3 showing Mass Methods A and B.

In order to evaluate the threshold mass for the explosion hazard, the owner/user must establish the enclosure strength, $P_{es}$, based on the weakest structural element not intended to vent or fail. According to the description, this would be the girts at 75 lb/ft$^2$ (0.036 bar). The second building construction parameter is the dynamic load factor (DLF). *(See NFPA 68, Standard on Explosion Protection by Deflagration Venting, for more information.)* In this case, the owner/user can assume the value of 1.5. The owner/user must also choose the tolerable probability of flash fire injury, (p), limited to a maximum of 0.05 (5 percent). In this case, 5 percent is chosen.

$$M_{exp} = \left[\frac{P_{es}}{DFL}\right] \cdot \frac{A_{floor} \cdot H}{\eta_D} = \left[\frac{0.036 \text{ bar}}{1.5}\right] \cdot \left[\frac{1000 \text{ m}^2 \cdot 9.5 \text{ m}}{0.25}\right] = 76 \text{ kg}$$

$$M_{fire} = 0.05 \cdot C_w \cdot \left[\frac{P_{initial}}{P_{initial} + P_{\max}}\right] \cdot \frac{A_{floor} \cdot D}{\eta_D} =$$

$$0.05 \cdot 0.60 \text{ kg/m}^3 \cdot \left[\frac{1 \text{ bar a}}{1 + 7 \text{ bar g}}\right] \cdot \frac{1000 \text{ m}^2 \cdot 2 \text{ m}}{0.25} = 30 \text{kg}$$

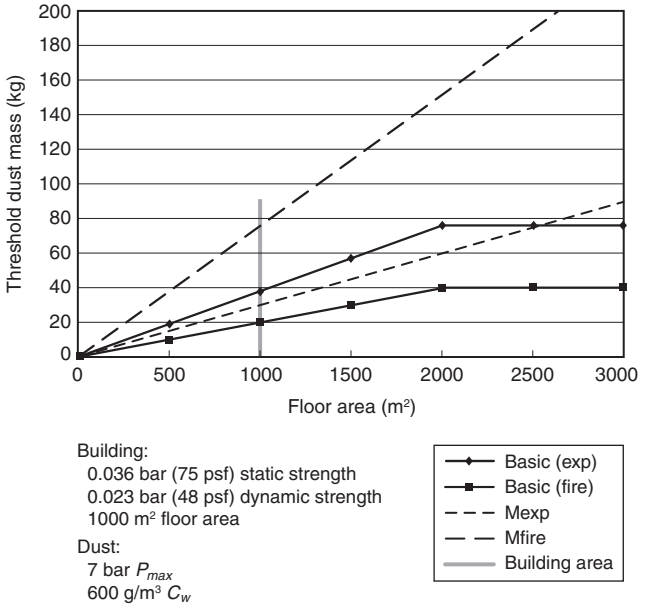


**FIGURE D.3 Example Mass Accumulation Producing Dust Hazard Condition**

Using mass method B, the user determines that the practicable housekeeping result of 60 kg dust accumulation exceeds the threshold for a flash fire hazard area, but not for a dust explosion hazard area.

Because the building is without internal fire-rated separation walls, all the workers will have to be protected from a flash fire hazard, as prescribed in Chapter 11. Current housekeeping is maintaining total dust mass below 76 kg, meaning that the structure of the building not intended to vent or fail is safe from the explosion hazard. Since the original design of the building presumed which areas would experience dust accumulation external to equipment, the owner/user should review the electrical area classification against the actual locations of accumulations, based on NFPA 499, *Recommended Practice for the Classification of Combustible Dusts and of Hazardous (Classified) Locations for Electrical Installations in Chemical Process Areas.*

**D.4** While the threshold mass equations consider all the dust mass throughout the building, it is not anticipated that the dust will be evenly distributed. Rather there will be localized areas of accumulation where fugitive dust is not completely

Copyright 2014 National Fire Protection Association (NFPA). Licensed, by agreement, for individual use and download on October 4, 2014 to LEADER and READER for designated user PATTARAPORN SRITRAKOOL. No other reproduction or transmission in any form permitted without written permission of NFPA. For inquires or to report unauthorized use, contact licensing@nfpa.org.



captured. If the threshold mass of dust actually were evenly distributed, it typically would be an extremely thin layer. The layer would be too thin to create a hazard because the entrainment fraction would be much smaller and only a small portion of the dust mass would actually be involved in the event. The inclusion of all accumulated dust mass is conservative in this respect.

By separating processing areas by walls and making the entries self-closing, the owner/users can limit the area where it is necessary to apply safeguards against a flash fire hazard. Similarly, separation walls and entries that are pressure-resistant can be used to limit the area where the owner/user has to apply safeguards against an explosion hazard. Where a multifloor building is effectively separated at the floor levels, explosion and flash fire hazards can be evaluated on a floor-by-floor basis.

Where there are open mezzanines above a floor level, the accumulated dust on those levels is added to that on the main level without increasing the floor area.

When determining the total dust mass in a building or room, due consideration should be given to dust that adheres to walls, since it is easily dislodged. Attention and consideration also should be given to other projections, such as light fixtures, which can provide surfaces for dust accumulation.

Dust collection equipment should be monitored to ensure it is operating effectively. For example, dust collectors using bags operate most effectively between limited pressure drops of 3 in. to 5 in. of water (0.74 kPa to 1.24 kPa). An excessive decrease or low drop in pressure indicates insufficient coating to trap dust.

## Annex E Deflagration Propagation Isolation Methods

*This annex is not a part of the requirements of this NFPA document but is included for informational purposes only.*

**E.1** Flame fronts from a deflagration can propagate through connecting ductwork to other unprotected process equipment and to the building from outside process equipment. Figure E.1 shows an example of how such propagation could occur. Isolation techniques can be used to prevent the propagation of the deflagration by arresting the flame front.

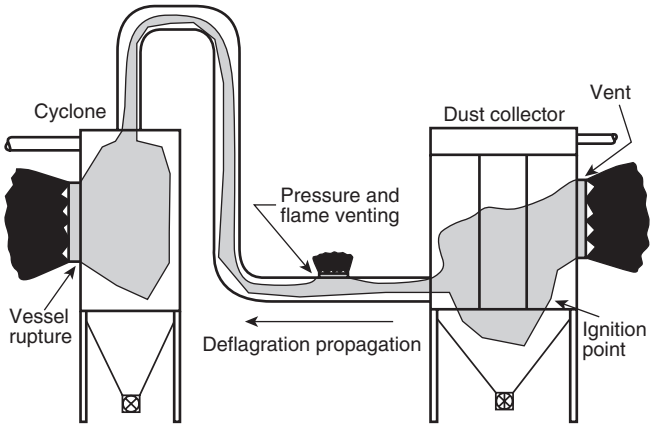


**FIGURE E.1 Deflagration Propagation Without Isolation.**

Both the direction and the extent of potential deflagration propagation should be considered. Usually, a dust deflagration occurs in a fuel-rich regime (i.e., above the stoichiometric fuel–air ratio), making it likely that the initial deflagration will expand into volumes many times greater than the initial deflagration volume.

**E.2** The dynamics of a dust explosion are such that unburned dust is pushed ahead of the flame front by the expanding products of combustion. The unburned dust is expelled from the containment vessel via every available exit path, in all possible directions of flow, including flow via all connecting ducts, and out through any provided explosion venting. The driving force pushing the dust away from the point of initiation [which, under vented conditions, could be in the range of only a few pounds per square inch (kilopascals)] can easily overcome the force of normal system flow (which typically could be of the order of a few inches water column). Furthermore, the velocities produced by the deflagration usually greatly exceed those of the pneumatic conveying system under normal design conditions. Consequently, unburned dust and the deflagration flame front can be expected to propagate upstream through ductwork from the locus of the initial deflagration.

**E.3** The conveyance of the flame front via both the infeed and outflow ducts should be evaluated. In most cases, the movement of dust and propagating flame front commutes the deflagration to the connected equipment via ductwork. Where equipment and ducts are adequately protected pursuant to this standard and NFPA 68, *Standard on Explosion Protection by Deflagration Venting* (when explosion venting is used), the consequences of explosion propagation might not increase the life safety hazard or significantly increase property damage. In other cases, however, the transit of a deflagration flame front does result in substantial increases in the severity of an event.

**E.3.1** In the case of several pieces of equipment connected via ductwork, where each piece of equipment and the ductwork are provided with explosion venting, the dust explosion can nevertheless propagate throughout the system. Explosion venting on the equipment of deflagration origin prevents overpressure damage to that vessel. If the concentration within the connecting ductwork is below the MEC prior to the deflagration, the deflagration can still spread to the next vessel, but the explosion venting there should protect that second vessel from overpressure damage. In such a case, the provision of explosion isolation would not provide any significant reduction in either the property damage or life safety hazard.

**E.3.2** If the concentration within a connecting duct is above the MEC prior to the deflagration, then the propagation through that duct results in an accelerating flame front. Without explosion venting on the ductwork, the accelerating flame front results in a significant prepressurization of the equipment at the other end of the duct and in a powerful jet flame ignition of a dust deflagration in that second vessel. Such a deflagration can overwhelm the explosion venting on that vessel, even if the design is based on information in NFPA 68, *Standard on Explosion Protection by Deflagration Venting*, resulting in the catastrophic rupture of the vessel. In that case, the explosion propagation results in a significant increase in property damage and, quite possibly, in an increase in life safety hazard due to the vessel rupture. Consequently, explosion isolation is a critical component to the management of the fire and explosion risk.

Copyright 2014 National Fire Protection Association (NFPA). Licensed, by agreement, for individual use and download on October 4, 2014 to LEADER and READER for designated user PATTARAPORN SRITRAKOOL. No other reproduction or transmission in any form permitted without written permission of NFPA. For inquires or to report unauthorized use, contact licensing@nfpa.org.



**E.3.3** In the case of an air-material separator serving a large number of storage silos, an explosion originating in the air-material separator can produce an acceptable level of damage to the collector if it is provided with adequate explosion venting per NFPA 68, *Standard on Explosion Protection by Deflagration Venting*. However, the propagation of that explosion upstream to all the connected silos could cause ignition of the material stored in all those silos. The initiation of such storage fires can significantly escalate the magnitude of the incident, in terms of property damage, interruption to operations, and life safety hazard. As with the example in E.3.2, explosion isolation would be warranted in this case.

## Annex F Use of Water as Extinguishing Agent for Combustible Particulate Solids

*This annex is not a part of the requirements of this NFPA document but is included for informational purposes only.*

**F.1** As noted in A.10.2.1, the classification of combustible particulate solids according to their behavior with water affects the effectiveness of water as an extinguishing medium.

Water-compatible particulate solids are those combustibles that can be extinguished with water and that neither react with nor form mixtures with it. These solids include the following materials:

(1) Wood dusts, fibers, chips, shavings, and flakes
(2) Some paper dusts, depending on ultimate use
(3) Municipal solid wastes (MSWs), including refuse-derived fuels (RDFs)
(4) Coal chunks, pellets, and dusts
(5) Shredded plastic and papers at recycling facilities
(6) Many plastic powders and pellets
(7) Pulverized cork used in a flooring product's manufacturing process
(8) Conveyed agricultural commodities such as oilseeds, walnut shells, and cocoa beans in a deshelling operation
(9) Chopped feathers in a dryer

The chemical and physical properties, range of particle sizes, and types of process equipment used with these combustibles usually allow these applications to be considered water compatible. A principal concern is the ignition of a dust cloud in the air-material separator or the storage vessel. When the source of ignition is generated upstream, this risk can often be reduced if the spark or ember is detected and extinguished prior to its entry into the air-material separator or the storage vessel. In some applications, spark detection and intermittent water spray extinguishing systems can be effectively used because the ultimate usefulness of the particulate material is not affected if it is wet.

In numerous drying, chopping, crushing, and grinding operations, the introduction of water does not represent a serious threat to the transported material or to the process equipment. For example, in woodworking plants, the wood waste is usually sold as raw material for particleboard or is used as fuel to heat the facility. The moisture from the operation of an extinguishing system is of no consequence. That allows the use of spark detection and intermittent water spray as the fire protection strategy. For other applications, a water deluge system is a more appropriate fire protection strategy even though it could disrupt the normal flow of material or interrupt the process operation.

**F.2** In contrast, in water-incompatible systems, the introduction of water causes unacceptable damage to the equipment or to the material being processed. In these systems, the particulate solids are combustibles that can be extinguished with water but dissolve in water or form a mixture with it that renders them no longer processable, or the process equipment cannot tolerate the introduction of water. Water-incompatible solids include the following materials:

(1) Cotton fibers (due to the resultant equipment damage from water discharge)
(2) Many foodstuffs such as sugar, flour, spices, cornstarch, and yeasts
(3) Grains and cereals
(4) Tobacco
(5) Many pharmaceuticals
(6) Many chemicals

Because the conveyed material or the process equipment is irreparably degraded when water is added to these materials, the first line of defense is an extinguishing system that utilizes some other agent. Examples of agents used in these systems include carbon dioxide, sodium bicarbonate, monoammonium phosphate, nitrogen, and clean agents. However, a water-based extinguishing system can be employed as a backup to the special agent extinguishing systems.

An example of a water-incompatible system is one involving flour. A spray of water into a pneumatic conveying duct that transports flour can extinguish a spark, but the water will combine with the flour to form a paste that can clog the system and promote fermentation. Consequently, there is an operations-based incentive to consider alternatives to water-based extinguishing systems.

**F.3** Water-reactive materials chemically react with water to produce some other material that could represent a different set of fire protection problems. The most notable water-reactive materials are the powdered metals. Many powdered metals, including aluminum, magnesium, titanium, zirconium, and lithium, react violently with water to form an oxide, liberating hydrogen gas as a by-product. These materials can start a fire when exposed to water if they are of a sufficiently small particle size. Consequently, water is not usually an option as an extinguishing agent for an established fire involving these materials.

Other metals react less violently with water and only under certain circumstances. The use of water on these materials once they have achieved ignition temperature can also produce hydrogen. However, if used in copious quantities, water can be an effective extinguishing strategy. Nevertheless, all metals should be handled with care, given that their reactivity is highly dependent on the particular metal, particle size, and temperature.

The list of water-reactive combustibles is not limited to combustible metals but also includes some pharmaceuticals and chemicals. These chemicals produce either a fire or a toxic or corrosive by-product when mixed with water.

Often an inerted system is used because of the difficulties encountered in extinguishing these materials. However, it should be noted that some commonly considered inerting agents, such as $CO_2$ or nitrogen, could be incompatible with certain metals at high temperatures.

**F.4** In summary, a combustible particulate solid should be classified only after a thorough review of the chemistry and physical form of the particulate, the type of process equipment, the subsequent use or processes, the relevant literature regarding loss history in similar processes and products, other hazards associated with the process material, and the response capabilities of the fire service.

Copyright 2014 National Fire Protection Association (NFPA). Licensed, by agreement, for individual use and download on October 4, 2014 to LEADER and READER for designated user PATTARAPORN SRITRAKOOL. No other reproduction or transmission in any form permitted without written permission of NFPA. For inquires or to report unauthorized use, contact licensing@nfpa.org.



## Annex G Informational References

**G.1 Referenced Publications.** The following documents or portions thereof are referenced within this standard for informational purposes only and are thus not part of the requirements of this document unless also listed in Chapter 2.

**G.1.1 NFPA Publications.** National Fire Protection Association, 1 Batterymarch Park, Quincy, MA 02169-7471.

NFPA 15, *Standard for Water Spray Fixed Systems for Fire Protection*, 2012 edition.

NFPA 25, *Standard for the Inspection, Testing, and Maintenance of Water-Based Fire Protection Systems*, 2011 edition.

NFPA 68, *Standard on Explosion Protection by Deflagration Venting*, 2007 edition.

NFPA 69, *Standard on Explosion Prevention Systems*, 2008 edition.

*NFPA 70®*, *National Electrical Code®*, 2011 edition.

*NFPA 72®*, *National Fire Alarm and Signaling Code*, 2013 edition.

NFPA 77, *Recommended Practice on Static Electricity*, 2007 edition.

NFPA 91, *Standard for Exhaust Systems for Air Conveying of Vapors, Gases, Mists, and Noncombustible Particulate Solids*, 2010 edition.

NFPA *101®*, *Life Safety Code®*, 2012 edition.

NFPA 484, *Standard for Combustible Metals*, 2012 edition.

NFPA 499, *Recommended Practice for the Classification of Combustible Dusts and of Hazardous (Classified) Locations for Electrical Installations in Chemical Process Areas*, 2013 edition.

NFPA 2113, *Standard on Selection, Care, Use, and Maintenance of Flame-Resistant Garments for Protection of Industrial Personnel Against Flash Fire*, 2012 edition.

*NFPA 5000®*, *Building Construction and Safety Code®*, 2012 edition.

*SFPE Engineering Guide to Performance-Based Fire Protection Analysis and Design of Buildings*, 2000 edition.

**G.1.2 Other Publications.**

**G.1.2.1 ACGIH Publication.** American Conference of Governmental Industrial Hygienists, 1330 Kemper Meadow Drive, Cincinnati, OH 45240-1634.

*Industrial Ventilation: A Manual of Recommended Practice*, 25th edition, 2004.

**G.1.2.2 AIChE Publications.** American Institute of Chemical Engineers, 345 East 47th Street, New York, NY 10017.

AIChE Center for Chemical Process Safety, *Guidelines for Hazard Evaluation Procedures*, 2nd edition with Worked Examples, 1992.

AIChE Center for Chemical Process Safety, *Guidelines for Safe Automation of Chemical Processes*, 1993.

**G.1.2.3 ASME Publication.** American Society of Mechanical Engineers, Three Park Avenue, New York, NY 10016-5990.

*ASME Boiler and Pressure Vessel Code*, Section VIII, Division 1, 2001.

ASME B.31.3, *Process Piping*, 2008.

**G.1.2.4 ASTM Publications.** American Society for Testing and Materials, 100 Barr Harbor Drive, West Conshohocken, PA 19428-2959.

ASTM E 136, *Standard Test Method for Behavior of Materials in a Vertical Tube Furnace at 750°C*, 2003.

ASTM E 582, *Standard Test Method for Minimum Ignition Energy and Quenching Distance in Gaseous Mixtures*, 2007.

ASTM E 1226, *Standard Test Method for Explosibility of Dust Clouds*, 2010.

ASTM E 1491, *Test Method for Minimum Autoignition Temperature of Dust Clouds*, 2006.

ASTM E 1515, *Standard Test Method for Minimum Explosible Concentration of Combustible Dusts*, 2003.

ASTM E 2012, *Standard Guide for the Preparation of a Binary Chemical Compatibility Chart*, 2000.

ASTM E 2019, *Standard Test Method for Minimum Ignition Energy of a Dust Cloud in Air*, 2003.

ASTM E 2021, *Standard Test Method for Hot-Surface Ignition of Dust Layers*, 2009.

**G.1.2.5 IEC Publications.** International Electrotechnical Commission, 3, rue de Varembé, P.O. Box 131, CH-1211 Geneva 20, Switzerland.

IEC 61340-4-4, *Electrostatics — Part 4-4: Standard Test Methods for Specific Applications — Electrostatic Classification of Flexible Intermediate Bulk Containers (FIBC)*, 2005.

**G.1.2.6 ISO Publications.** International Standards Organization, 1 rue de Varembé, Case Postale 56, CH-1211 Genève 20, Switzerland.

ISO 6184-1, *Explosion Protection Systems — Part 1: Determination of Explosion Indices of Combustible Dusts in Air*, 1985.

ISO 6184-4, *Explosion Protection Systems — Part 4: Determination of Efficiency of Explosion Suppression Systems*, 1985.

**G.1.2.7 USBM Publication.** U.S. Bureau of Mines Publications, National Technical Information Service (NTIS), 5285 Port Royal Road, Springfield, VA 22161.

Conti, R. S., K. L. Cashdollar, M. Hertzberg, and I. Liebman. 1983. "Thermal and Electrical Ignitability of Dusts." U.S. Bureau of Mines, Report of Investigations, RI 8798.

**G.1.2.8 U.S. Government Publication.** U.S. Government Printing Office, Washington, DC 20402.

Title 29, Code of Federal Regulations, Part 1910.146, "Permit-Required Confined Space."

Title 30, Code of Federal Regulations, Part 36, "Approved Requirements for Permissible Mobile Diesel-Powered Transportation Equipment."

**G.1.2.9 Other Publications.**

FPRF, *Report Towards Estimating Entrainment Fraction for Dust Layers*, 2011.

Eckhoff, R., *Dust Explosions in the Process Industries*, 3rd Edition, 2003.

Lazzara, C., and Y. Miron. 1988. "Hot Surface Ignition Temperatures of Dust Layers." *Fire and Materials Journal* 12:115–126.

Tamanini, F., "Dust Explosion Propagation in Simulated Grain Conveyor Galleries," ESV-83-067, National Grain and Feed Association Fire and Explosion Research Report, prepared by Factory Mutual Research Corporation, Norwood, MA, July 1983.

VDI 3673, *Pressure Venting of Dust Explosions*, 2002.

**G.2 Informational References.**

FM Data Sheet 7-76, "Prevention and Mitigation of Combustible Dust Explosions and Fire," January 2012.

Britton. 1999. *Avoiding Static Ignition Hazards in Chemical Operations*. New York: CCPS, pp. 199–204.

Ebadat, V., and J. C. Mulligan. "Testing the Suitability of FIBCs for Use in Flammable Atmospheres." Paper 10a, 30th Annual Loss Prevention Symposium, AIChE, 1996 Spring National Meeting, New Orleans, LA, February 26-28, 1996.

**G.3 References for Extracts in Informational Sections.**

NFPA 68, *Standard on Explosion Protection by Deflagration Venting*, 2007 edition.

Copyright 2014 National Fire Protection Association (NFPA). Licensed, by agreement, for individual use and download on October 4, 2014 to LEADER and READER for designated user PATTARAPORN SRITRAKOOL. No other reproduction or transmission in any form permitted without written permission of NFPA. For inquires or to report unauthorized use, contact licensing@nfpa.org.



# Index

Copyright © 2012 National Fire Protection Association. All Rights Reserved.

The copyright in this index is separate and distinct from the copyright in the document that it indexes. The licensing provisions set forth for the document are not applicable to this index. This index may not be reproduced in whole or in part by any means without the express written permission of NFPA.

-A-

**Abort Gate/Abort Damper**
Definition ... 3.3.1
**Administration** ... Chap. 1
Application ... 1.4
Equivalency ... 1.6
Goal ... 1.3
Purpose ... 1.2
Retroactivity ... 1.5
Scope ... 1.1, A.1.1
**Air-Material Separator (AMS)**
Definition ... 3.3.2, A.3.3.2
**Air-Moving Device (AMD)**
Definition ... 3.3.3, A.3.3.3
**Approved**
Definition ... 3.2.1, A.3.2.1
**Authority Having Jurisdiction (AHJ)**
Definition ... 3.2.2, A.3.2.2

-C-

**Centralized Vacuum Cleaning System**
Definition ... 3.3.4, A.3.3.4
**Combustible Dust**
Definition ... 3.3.5, A.3.3.5
**Combustible Particulate Solid**
Definition ... 3.3.6, A.3.3.6
**Compartmentation**
Definition ... 3.3.7

-D-

**Definitions** ... Chap. 3
**Deflagration**
Definition ... 3.3.8, A.3.3.8
**Deflagration Hazard Area**
Definition ... 3.3.9
Dust Explosion Hazard Area
Definition ... 3.3.9.1, A.3.3.9.1
Dust Flash Fire Hazard Area
Definition ... 3.3.9.2, A.3.3.9.2
**Deflagration Propagation Isolation Methods** ... Annex E
**Detachment**
Definition ... 3.3.10
**Dryer**
Definition ... 3.3.11
**Dust Collection System**
Definition ... 3.3.12, A.3.3.12
**Dust Layer Characterization and Precautions** ... Annex D

-E-

**Enclosureless Dust Collector**
Definition ... 3.3.13
**Explanatory Material** ... Annex A
**Explosion**
Definition ... 3.3.14
**Explosion Protection** ... Annex B

-F-

**Facility and Systems Design** ... Chap. 6
Building Construction ... 6.3
Egress ... 6.3.7
Fire Doors ... 6.3.6
Fire Resistance Rating ... 6.3.9
Penetrations ... 6.3.8
Deflagration Venting ... 6.4, A.6.4
Vent Closures ... 6.4.2, A.6.4.2
Electrical Equipment ... 6.5
General ... 6.1
Hazard Assessment ... 6.1.1
Layer Depth Criterion Method ... 6.1.3, A.6.1.3
Mass Method A ... 6.1.4, A.6.1.4
Mass Method B ... 6.1.5, A.6.1.5
Risk Evaluation Method ... 6.1.6, A.6.1.6
Segregation, Separation, or Detachment of Combustible Dust Handling and Processing Areas ... 6.2
General ... 6.2.1
Use of Segregation ... 6.2.2
Use of Separation ... 6.2.3
**Fire Protection** ... Chap. 10
Alarm Service ... 10.8
Automatic Sprinklers ... 10.5, A.10.5
Fire Extinguishers ... 10.3
General ... 10.1
Hose, Standpipes, and Hydrants ... 10.4
Nozzles ... 10.4.2
Impairments of Fire Protection and Explosion Prevention Systems ... 10.9
Spark/Ember Detection and Extinguishing Systems ... 10.6
Special Fire Protection Systems ... 10.7
System Requirements ... 10.2
Abort Gates and Abort Dampers ... 10.2.10
Detection Systems ... 10.2.4
System Releasing Devices ... 10.2.8
**Flash Fire**
Definition ... 3.3.15, A.3.3.15
**Fugitive Dust Control and Housekeeping** ... Chap. 8
Fugitive Dust Control ... 8.1
Housekeeping ... 8.2
Cleaning Frequency ... 8.2.1
Cleaning Methods ... 8.2.2
Portable Vacuum Cleaners ... 8.2.3

-G-

**General Requirements** ... Chap. 4
Compliance Options ... 4.7, A.4.7
Incident Investigation ... 4.4
Management of Change ... 4.3
Objectives ... 4.6
Life Safety ... 4.6.1
Mission Continuity ... 4.6.3, A.4.6.3
Mitigation of Fire Spread and Explosions ... 4.6.4
Structural Integrity ... 4.6.2
Pneumatic Conveying, Dust Collection, and Centralized Vacuum Cleaning System Design ... 4.5, A.4.5
Process and Facility Design ... 4.1
Process Hazard Analysis ... 4.2

-H-

**Hybrid Mixture**
Definition ... 3.3.16, A.3.3.16

Copyright 2014 National Fire Protection Association (NFPA). Licensed, by agreement, for individual use and download on October 4, 2014 to LEADER and READER for designated user PATTARAPORN SRITRAKOOL. No other reproduction or transmission in any form permitted without written permission of NFPA. For inquires or to report unauthorized use, contact licensing@nfpa.org.




**-I-**

**Ignition Sources** ..... Chap. 9
- Cartridge-Actuated Tools ..... 9.4
- Electrical Equipment ..... 9.2
- Heat from Mechanical Sparks and Friction ..... 9.1
  - Bearings ..... 9.1.5, A.9.1.5
  - Belt Drives ..... 9.1.4, A.9.1.4
  - Equipment ..... 9.1.6
  - Foreign Materials ..... 9.1.2
  - Inherently Ignitible Process Streams ..... 9.1.3, A.9.1.3
  - Risk Evaluation ..... 9.1.1
- Hot Surfaces ..... 9.7, A.9.7
- Industrial Trucks ..... 9.8
- Open Flames and Sparks ..... 9.5
- Process and Comfort Heating Systems ..... 9.6
- Static Electricity ..... 9.3, A.9.3
  - Conductive Components ..... 9.3.2, A.9.3.2
  - Flexible Intermediate Bulk Containers (FIBCs) ..... 9.3.4, A.9.3.4
  - Rigid Intermediate Bulk Containers (RIBC) ..... 9.3.5

**Informational Primer on Spark Detection and Extinguishing Systems** ..... Annex C

**Informational References** ..... Annex G

**Inspection and Maintenance** ..... Chap. 12
- General Requirements ..... 12.1
- Specific Requirements ..... 12.2
  - Maintenance of Abort Gates and Abort Dampers ..... 12.2.4
  - Maintenance of Air-Material Separators ..... 12.2.3
    - Means to Dislodge ..... 12.2.3.1
  - Maintenance of Air-Moving Devices ..... 12.2.2
  - Maintenance of Fire and Explosion Protection Systems ..... 12.2.5
  - Maintenance of Material Feeding Devices ..... 12.2.1

**Intermediate Bulk Containers**
- Definition ..... 3.3.17
- Flexible Intermediate Bulk Container (FIBC)
  - Definition ..... 3.3.17.1, A.3.3.17.1
- Rigid Intermediate Bulk Container (RIBC)
  - Definition ..... 3.3.17.2, A.3.3.17.2

**-L-**

**Labeled**
- Definition ..... 3.2.3

**Listed**
- Definition ..... 3.2.4, A.3.2.4

**Lower Flammable Limit (LFL)**
- Definition ..... 3.3.18, A.3.3.18

**-M-**

**Minimum Explosible Concentration (MEC)**
- Definition ..... 3.3.19, A.3.3.19

**Minimum Ignition Energy (MIE)**
- Definition ..... 3.3.20, A.3.3.20

**-N-**

**Noncombustible Material**
- Definition ..... 3.3.21, A.3.3.21

**-O-**

**Owner/Operator**
- Definition ..... 3.3.22

**-P-**

**Performance-Based Design Option** ..... Chap. 5
- Design Scenarios ..... 5.3, A.5.3
  - Explosion Scenarios ..... 5.3.2
  - Fire Scenarios ..... 5.3.1
- Evaluation of Proposed Design ..... 5.4
  - General ..... 5.4.1, A.5.4.1
- General Requirements ..... 5.1
  - Approved Qualifications ..... 5.1.1
  - Independent Review ..... 5.1.2
  - Sources of Data ..... 5.1.5
- Performance Criteria ..... 5.2
  - Effects of Explosions ..... 5.2.5
  - Mission Continuity ..... 5.2.3
  - Mitigation of Fire Spread and Explosions ..... 5.2.4
  - Occupant Life Safety ..... 5.2.1
  - Structural Integrity ..... 5.2.2

**Pneumatic Conveying System**
- Definition ..... 3.3.23, A.3.3.23
- Negative-Pressure Pneumatic Conveying System
  - Definition ..... 3.3.23.1
- Positive-Pressure Pneumatic Conveying System
  - Definition ..... 3.3.23.2

**Process Equipment** ..... Chap. 7
- Abort Gates/Abort Dampers ..... 7.14, A.7.14
  - Construction ..... 7.14.1
  - Operation ..... 7.14.2
    - Manual Reset ..... 7.14.2.2
- Air-Material Separators (Air Separation Devices) ..... 7.13
  - Construction ..... 7.13.2
    - Access Doors ..... 7.13.2.3
    - Maximum Material Flow ..... 7.13.2.2
    - Noncombustible Material ..... 7.13.2.1
  - General ..... 7.13.1
    - Exhaust Air ..... 7.13.1.6
    - Location ..... 7.13.1.1
    - Manifolding of Dust Collection Ducts ..... 7.13.1.3
    - Protection ..... 7.13.1.2
- Air-Moving Devices (Fans and Blowers) ..... 7.12
  - Combustible Particulate Solids ..... 7.12.2
- Bucket Elevators ..... 7.10, A.7.10
  - Belts ..... 7.10.5
  - Deflagration Protection ..... 7.10.1, A.7.10.1
  - Drive ..... 7.10.8
  - Emergency Controls ..... 7.10.10
  - Monitors ..... 7.10.9
  - Power Cutoff ..... 7.10.4
- Bulk Storage Enclosures ..... 7.2
  - Access Doors and Openings ..... 7.2.5, A.7.2.5
  - Construction ..... 7.2.2
  - Explosion Hazards ..... 7.2.3
    - Fixed Bulk Storage Location ..... 7.2.3.2
    - Fixed Bulk Storage Protection ..... 7.2.3.3
  - General ..... 7.2.1
  - Interior Surfaces ..... 7.2.4, A.7.2.4
- Dryers ..... 7.18, A.7.18
  - Drying Media ..... 7.18.2
- Duct Systems ..... 7.6
- Enclosed Conveyors ..... 7.11, A.7.11
  - Housing and Coverings ..... 7.11.1
  - Power Shutoff ..... 7.11.2
- General ..... 7.1, A.7.1
  - Explosion Protection for Equipment ..... 7.1.4
  - Fire Protection for Equipment ..... 7.1.5
  - Fire Protection for Facility ..... 7.1.9
  - Isolation of Equipment ..... 7.1.6, A.7.1.6
  - Isolation of Upstream Work Areas ..... 7.1.7, A.7.1.7
  - Risk Evaluation ..... 7.1.3, A.7.1.3
- Material Feeding Devices ..... 7.9
  - Drives ..... 7.9.2
  - Mechanical Feeding Devices ..... 7.9.1
- Material Transfer System ..... 7.3
  - General ..... 7.3.1
  - Operations ..... 7.3.3, A.7.3.3
    - Sequence of Operation ..... 7.3.3.1
    - Shutdown ..... 7.3.3.3
    - Startup ..... 7.3.3.2, A.7.3.3.2
  - Pneumatic Conveying, Dust Collection, and Centralized Vacuum Cleaning Systems ..... 7.3.2, A.7.3.2
    - Centralized Vacuum Cleaning Systems ..... 7.3.2.7, A.7.3.2.7

Copyright 2014 National Fire Protection Association (NFPA). Licensed, by agreement, for individual use and download on October 4, 2014 to LEADER and READER for designated user PATTARAPORN SRITRAKOOL. No other reproduction or transmission in any form permitted without written permission of NFPA. For inquires or to report unauthorized use, contact licensing@nfpa.org.



Dust Collection Systems ..... 7.3.2.6
Pneumatic Conveying Systems ..... 7.3.2.5, A.7.3.2.5
Mixers and Blenders ..... 7.17
Particle Size Separation ..... 7.16, A.7.16
Explosion Protection ..... 7.16.3, A.7.16.3
Pressure Protection Systems ..... 7.8
Airflow Control Valves ..... 7.8.3
Pressure Relief Devices ..... 7.8.2, A.7.8.2
Vacuum Breakers ..... 7.8.1
Sight Glasses ..... 7.7
Size Reduction ..... 7.15, A.7.15
Specific Requirements for Systems that Convey Metal Particulates ..... 7.4
General ..... 7.4.1
Iron, Nickel, Copper, and Other Transition Metal Particulates ..... 7.4.5
Water Reactivity ..... 7.4.3, A.7.4.3
Systems That Convey Hybrid Mixtures ..... 7.5

**-R-**

**Referenced Publications** ..... Chap. 2
General ..... 2.1
NFPA Publications ..... 2.2
Other Publications ..... 2.3
References for Extracts in Mandatory Sections ..... 2.4
**Replacement-in-Kind**
Definition ..... 3.3.24

**-S-**

**Segregation**
Definition ..... 3.3.25
**Separation**
Definition ..... 3.3.26
**Shall**
Definition ..... 3.2.5
**Should**
Definition ..... 3.2.6
**Spark**
Definition ..... 3.3.27
**Standard**
Definition ..... 3.2.7

**-T-**

**Training and Procedures** ..... Chap. 11
Certification ..... 11.4
Contractors and Subcontractors ..... 11.5
Contractor Training ..... 11.5.2
Employee Training ..... 11.1
Initial and Refresher Training ..... 11.3
Plan ..... 11.2

**-U-**

**Use of Water as Extinguishing Agent for Combustible Particulate Solids** ..... Annex F

**-V-**

**Vent Closure**
Definition ..... 3.3.28
**Vented Explosion Pressure (Pred)**
Definition ..... 3.3.29

**-W-**

**Wall**
Definition ..... 3.3.30
Fire Barrier Wall
Definition ..... 3.3.30.1
Fire Wall
Definition ..... 3.3.30.2
**Water-Compatible**
Definition ..... 3.3.31, A.3.3.31
**Water-Incompatible**
Definition ..... 3.3.32, A.3.3.32
**Water-Reactive**
Definition ..... 3.3.33, A.3.3.33

Copyright 2014 National Fire Protection Association (NFPA). Licensed, by agreement, for individual use and download on October 4, 2014 to LEADER and READER for designated user PATTARAPORN SRITRAKOOL. No other reproduction or transmission in any form permitted without written permission of NFPA. For inquires or to report unauthorized use, contact licensing@nfpa.org.

# *Sequence of Events Leading to Issuance of this NFPA Committee Document*

## Step 1: Call for Proposals

- Proposed new Document or new edition of an existing Document is entered into one of two yearly revision cycles, and a Call for Proposals is published.

## Step 2: Report on Proposals (ROP)

- Committee meets to act on Proposals, to develop its own Proposals, and to prepare its Report.
- Committee votes by written ballot on Proposals. If two-thirds approve, Report goes forward. Lacking two-thirds approval, Report returns to Committee.
- Report on Proposals (ROP) is published for public review and comment.

## Step 3: Report on Comments (ROC)

- Committee meets to act on Public Comments to develop its own Comments, and to prepare its report.
- Committee votes by written ballot on Comments. If two-thirds approve, Report goes forward. Lacking two-thirds approval, Report returns to Committee.
- Report on Comments (ROC) is published for public review.

## Step 4: Technical Report Session

- "*Notices of intent to make a motion*" are filed, are reviewed, and valid motions are certified for presentation at the Technical Report Session. ("Consent Documents" that have no certified motions bypass the Technical Report Session and proceed to the Standards Council for issuance.)
- NFPA membership meets each June at the Annual Meeting Technical Report Session and acts on Technical Committee Reports (ROP and ROC) for Documents with "certified amending motions."
- Committee(s) vote on any amendments to Report approved at NFPA Annual Membership Meeting.

## Step 5: Standards Council Issuance

- Notification of intent to file an appeal to the Standards Council on Association action must be filed within 20 days of the NFPA Annual Membership Meeting.
- Standards Council decides, based on all evidence, whether or not to issue Document or to take other action, including hearing any appeals.

# *Committee Membership Classifications*

The following classifications apply to Technical Committee members and represent their principal interest in the activity of the committee.

M *Manufacturer:* A representative of a maker or marketer of a product, assembly, or system, or portion thereof, that is affected by the standard.

U *User:* A representative of an entity that is subject to the provisions of the standard or that voluntarily uses the standard.

I/M *Installer/Maintainer:* A representative of an entity that is in the business of installing or maintaining a product, assembly, or system affected by the standard.

L *Labor:* A labor representative or employee concerned with safety in the workplace.

R/T *Applied Research/Testing Laboratory:* A representative of an independent testing laboratory or independent applied research organization that promulgates and/or enforces standards.

E *Enforcing Authority:* A representative of an agency or an organization that promulgates and/or enforces standards.

I *Insurance:* A representative of an insurance company, broker, agent, bureau, or inspection agency.

C *Consumer:* A person who is, or represents, the ultimate purchaser of a product, system, or service affected by the standard, but who is not included in the *User* classification.

SE *Special Expert:* A person not representing any of the previous classifications, but who has a special expertise in the scope of the standard or portion thereof.

NOTES:
1. "Standard" connotes code, standard, recommended practice, or guide.
2. A representative includes an employee.
3. While these classifications will be used by the Standards Council to achieve a balance for Technical Committees, the Standards Council may determine that new classifications of members or unique interests need representation in order to foster the best possible committee deliberations on any project. In this connection, the Standards Council may make appointments as it deems appropriate in the public interest, such as the classification of "Utilities" in the National Electrical Code Committee.
4. Representatives of subsidiaries of any group are generally considered to have the same classification as the parent organization.

Copyright 2014 National Fire Protection Association (NFPA). Licensed, by agreement, for individual use and download on October 4, 2014 to LEADER and READER for designated user PATTARAPORN SRITRAKOOL. No other reproduction or transmission in any form permitted without written permission of NFPA. For inquires or to report unauthorized use, contact licensing@nfpa.org.

# Stay Up-To-Date. Join NFPA® Today!

☑ **YES** Please enroll me as a member of NFPA for the term checked below. Activate all benefits, and ship my *Member Kit* including the *Benefits Guide* and other resources to help me make the most of my NPFA membership.

*Please allow three to four weeks for the kit to arrive.*

## Billing Information:

Name _____ Title _____

Organization _____

Address _____

City _____ State _____ Zip/Postal Code _____

Country _____

Phone _____ E-mail _____

Priority Code: 8J-MIS-1Z

## Please Answer The Following Questions:

**Job Title** *(check one)*

- ❑ Architect, Engineer, Consultant, Contractor (C17)
- ❑ Facilities Safety Officer (F14)
- ❑ Fire Chief, Other Fire Service (A11)
- ❑ Loss Control, Risk Manager (L11)
- ❑ Inspector, Building Official, Fire Marshal (F03)
- ❑ Owner, President, Manager, Administrator (C10)
- ❑ Other (please specify): (G11)_____

**Type of Organization** *(check one)*

- ❑ Architecture, Engineering, Contracting (A14)
- ❑ Commercial Firm (Office, Retail, Lodging, Restaurant) (G13)
- ❑ Electrical Services, Installation (J11)
- ❑ Fire Service, Public and Private (AA1)
- ❑ Government (C12)
- ❑ Industrial Firm (Factory, Warehouse) (C11)
- ❑ Institutional (Health Care, Education, Detention, Museums) (B11)
- ❑ Insurance, Risk Management (B12)
- ❑ Utilities (G12)
- ❑ Other (please specify): (G11)_____

## 4 Easy Ways to Join

**Fax:** 1-800-593-6372, Outside the U.S. +1-508-895-8301
**Mail:** NFPA Membership Services Center,
11 Tracy Drive, Avon, MA 02322-9908
**Online:** nfpa.org
**Call:** 1-800-344-3555
Outside the U.S. call +1-617-770-3000

6/12-D

## Terms and Payment:

- ❑ 1 year ($165)
- ❑ 2 years ($300) SAVE $30
- ❑ 3 years ($430) SAVE $65

Annual membership dues include a $45 subscription to *NFPA Journal*®. Regular membership in NFPA is individual and non-transferable. NFPA Journal is a registered trademark of the National Fire Protection Association, Quincy, MA 02169. Voting privileges begin after 180 days of individual membership. Prices subject to change.

## Payment Method:

Check One:

- ❑ Payment Enclosed *(Make check payable to NFPA.)*
- ❑ Purchase Order *(Please attach this form to your P.O.)*
- ❑ Bill Me Later *(Not available on International memberships.)*

Charge My: ❑ VISA ❑ MasterCard ❑ AmEx ❑ Discover

Card #_____

Expiration Date _____

Name on Card _____

Signature _____

International members: Please note prepayment is required on all International orders. Be sure to enclose a check or select your preferred credit card option.

### 100% Money-Back Guarantee

If anytime during your first year you decide membership is not for you, let us know and you'll receive a 100% refund of your dues.

Copyright 2014 National Fire Protection Association (NFPA). Licensed, by agreement, for individual use and download on October 4, 2014 to LEADER and READER for designated user PATTARAPORN SRITRAKOOL. No other reproduction or transmission in any form permitted without written permission of NFPA. For inquires or to report unauthorized use, contact licensing@nfpa.org.

# "Member-Only" Benefits
## Keeps You Up-To-Date!

**FREE! Technical Support** — Technical Support by Phone/Email. Get fast, reliable answers to all code-related questions—from electrical safety for employee workplaces to carbon dioxide extinguishing systems—from NFPA's team of fire protection specialists.

***NFPA Journal***® — THE journal of record for fire protection, this bi-monthly publication will keep you abreast of the latest fire prevention and safety practices, as well as new technologies and strategies for protecting life and property from fire.

***NFPA Update*** — This easy-to-read monthly e-newsletter will keep you up-to-date on important association programs such as the annual meeting; bring you times of interest from NFPA's regional offices; and alert you to nationwide events and opportunities you won't want to miss.

***NFPA News*** — From new standards for dry cleaning plants to warning equipment for household carbon monoxide, this monthly online update keeps you abreast of additions of changes that could impact how you do you work.

**NFPA Standards Directory** — The NFPA Standards Directory is your complete guide to NFPA's code-making process. Simply access your online NFPA member profile for document revision guidelines, the revision cycle schedule, and forms for submitting Proposals and Comments. Your online NFPA member profile and access to the NFPA Standards Directory is automatically generated once you join NFPA.

**FREE! Section Membership** — Share YOUR expertise with others in any of 16 industry-specific sections covering your own field of interest.

**Member Kit** — Includes Membership Certificate, Pin, Decals, ID Card, and Camera-ready Logo Art. Display the NFPA member logo proudly on your business correspondence, literature, website, and vehicles.

**10% Discounts** — Save hundreds of dollars each year on the many products and services listed in the NFPA Catalog, including codes and standards publications, handbooks, training videos, and other education materials to increase your knowledge and skills.

Voting Rights — Your chance to help shape the future direction of fire prevention codes and standards. Voting rights go into effect 180 days from the start of individual membership.

**Conference Invitation**— Invitation to the NFPA Conference and Expo. Attend this important meeting at discounted rates as a member of NFPA.

## Join NFPA today!
## www.nfpa.org

NFPA® and *NFPA Journal*® are registered trademarks of the National Fire Protection Association, Quincy, MA 02169-7471