BRITISH STANDARD

BS EN 12499:2003

Incorporating Corrigenda Nos. 1 and 2

Internal cathodic protection of metallic structures

The European Standard EN 12499:2003 has the status of a British Standard

ICS 77.060

NO COPYING WITHOUT BSI PERMISSION EXCEPT AS PERMITTED BY COPYRIGHT LAW

BSI British Standards

Licensed to Pattaraporn Sritrakool. ANSI store order # X_271503. Downloaded 4/23/2012 7:28 AM. Single user license only. Copying and networking prohibited.

National foreword

This British Standard is the official English language version of EN 12499:2003, including Corrigendum June 2006.

Attention is drawn to the fact that BS 7361-1:1991, *Cathodic protection — Part 1: Code of practice for land and marine applications*, provides general information on cathodic protection. Note that BS 7361-1:1991 will eventually be withdrawn when all the CEN standards relating to cathodic protection currently being prepared are published.

The UK participation in its preparation was entrusted to Technical Committee GEL/603, Cathodic protection, which has the responsibility to:

— aid enquirers to understand the text;

— present to the responsible international/European committee any enquiries on the interpretation, or proposals for change, and keep UK interests informed;

— monitor related international and European developments and promulgate them in the UK.

A list of organizations represented on this committee can be obtained on request to its secretary.

Cross-references

The British Standards which implement international or European publications referred to in this document may be found in the *BSI Catalogue* under the section entitled "International Standards Correspondence Index", or by using the "Search" facility of the *BSI Electronic Catalogue* or of British Standards Online.

This publication does not purport to include all the necessary provisions of a contract. Users are responsible for its correct application.

Compliance with a British Standard does not of itself confer immunity from legal obligations.

Summary of pages

This document comprises a front cover, an inside front cover, the EN title page, pages 2 to 39 and a back cover.

The BSI copyright notice displayed in this document indicates when the document was last issued.

Amendments issued since publication

Amd. No.	Date	Comments
14828 Corrigendum No. 1	1 December 2003	Changes to National foreword
16497 Corrigendum No. 2	31 July 2006	Changes to Scope

This British Standard was published under the authority of the Standards Policy and Strategy Committee on 28 February 2003

© BSI 2006

ISBN 0 580 41349 7

Licensed to Pattaraporn Sritrakool. ANSI store order # X_271503. Downloaded 4/23/2012 7:28 AM. Single user license only. Copying and networking prohibited.

EUROPEAN STANDARD

NORME EUROPÉENNE

EUROPÄISCHE NORM

EN 12499

January 2003

ICS 77.060

Incorporating Corrigendum June 2006

English version

Internal cathodic protection of metallic structures

Protection cathodique interne des structures métalliques

Kathodischer Korrosionsschutz für die Innenflächen von metallischen Anlagen

This European Standard was approved by CEN on 7 November 2002.

CEN members are bound to comply with the CEN/CENELEC Internal Regulations which stipulate the conditions for giving this European Standard the status of a national standard without any alteration. Up-to-date lists and bibliographical references concerning such national standards may be obtained on application to the Management Centre or to any CEN member.

This European Standard exists in three official versions (English, French, German). A version in any other language made by translation under the responsibility of a CEN member into its own language and notified to the Management Centre has the same status as the official versions.

CEN members are the national standards bodies of Austria, Belgium, Czech Republic, Denmark, Finland, France, Germany, Greece, Hungary, Iceland, Ireland, Italy, Luxembourg, Malta, Netherlands, Norway, Portugal, Slovakia, Spain, Sweden, Switzerland and United Kingdom.



EUROPEAN COMMITTEE FOR STANDARDIZATION
COMITÉ EUROPÉEN DE NORMALISATION
EUROPÄISCHES KOMITEE FÜR NORMUNG

Management Centre: rue de Stassart, 36 B-1050 Brussels

© 2003 CEN All rights of exploitation in any form and by any means reserved worldwide for CEN national Members.

Ref. No. EN 12499:2003 E

Licensed to Pattaraporn Sritrakool. ANSI store order # X_271503. Downloaded 4/23/2012 7:28 AM. Single user license only. Copying and networking prohibited.

Contents

page

Foreword 3

1 Scope 4

2 Normative references 4

3 Symbols, terms and definitions 4

4 Principle and criteria for internal cathodic protection 9

5 Factors affecting design and application 11

6 Design and application of internal cathodic protection 13

7 Measurements 18

8 Commissioning 19

9 Operation and maintenance 20

10 Cathodic protection of domestic water heater 21

11 Cathodic protection of appliances for heating and storage of hot water 26

12 Cathodic protection of structures with variable level feed tanks — condensates and similar appliances 28

13 Cathodic protection of filtering tanks 29

14 Internal cathodic protection of wells 31

15 Internal cathodic protection of pipes 32

16 Cathodic protection of tubular heat exchangers 33

Annex A (normative) Test of the electrode potential of galvanic anodes 36

Annex B (informative) Protection potential ranges for low alloy steel compared with Ag/AgCl electrodes in different types of water 38

Bibliography 39

Licensed to Pattaraporn Sritrakool. ANSI store order # X_271503. Downloaded 4/23/2012 7:28 AM. Single user license only. Copying and networking prohibited.

Foreword

This document (EN 12499:2002) has been prepared by Technical Committee CEN/TC 219 "Cathodic protection", the secretariat of which is held by BSI.

This European Standard shall be given the status of a national standard, either by publication of an identical text or by endorsement, at the latest by July 2003, and conflicting national standards shall be withdrawn at the latest by July 2003.

Annex A is normative. Annex B is informative.

According to the CEN/CENELEC Internal Regulations, the national standards organisations of the following countries are bound to implement this European Standard: Austria, Belgium, Czech Republic, Denmark, Finland, France, Germany, Greece, Hungary, Iceland, Ireland, Italy, Luxembourg, Malta, Netherlands, Norway, Portugal, Slovakia, Spain, Sweden, Switzerland and the United Kingdom.

Licensed to Pattaraporn Sritrakool. ANSI store order # X_271503. Downloaded 4/23/2012 7:28 AM. Single user license only. Copying and networking prohibited.

1 Scope

This European Standard specifies the structures, metals and surfaces which can be protected against corrosion by the application of internal cathodic protection, the electrolytic solutions and the conditions necessary for the application of internal cathodic protection and gives guidance on the application and operation of an effective internal cathodic protection system.

This standard applies to the internal cathodic protection of domestic water heaters, hot and cold water tanks, circulating water pipes, condensers and heat exchangers. This standard applies to metallic structures which contain stored or circulating water, which can be stagnant or renewed, cold or hot, drinking water or industrial water and also to aqueous suspension.

NOTE Cathodic protection is considered to be technically feasible for electrolytic solutions with a conductivity > 10^{-3} Siemens m^{-1}, and a pH > 4,5. Where the pH < 5,5 or the conductivity less than 10^{-2} Siemens m^{-1} see 5.4 and 6.9.2.2.

This standard is not applicable to oil and gas process plant and equipment or to industrial heating or cooling water systems.

This standard is applicable to metallic structures made from the following on their own or with others:

— iron and low alloy steel;

— galvanised steel;

— copper and copper alloys;

— lead;

— tin;

— stainless steels;

— aluminium and zinc;

— titanium.

This standard is applicable to the cathodic protection of uncoated metals, and of metals already coated with low or high insulation resistance coatings.

2 Normative references

This European Standard incorporates by dated or undated reference, provisions from other publications. These normative references are cited at the appropriate places in the text, and the publications are listed hereafter. For dated references, subsequent amendments to or revisions of any of these publications apply to this European Standard only when incorporated in it by amendment or revision. For undated references the latest edition of the publication referred to applies (including amendments).

EN 50014, *Electrical apparatus for potentially explosive atmospheres – General requirements*.

EN 60335-2-21, Safety of household and similar electrical appliances - Part 2: Particular requirements for storage water heaters (IEC 60335-2-21:1997 + Corrigendum 1998, modified).

EN ISO 8044:1999, Corrosion of metals and alloys - Basic terms and definitions (ISO 8044:1999).

3 Symbols, terms and definitions

For the purposes of this standard the symbols, terms and definitions of EN ISO 8044:1999 and the following apply.

Licensed to Pattaraporn Sritrakool. ANSI store order # X_271503. Downloaded 4/23/2012 7:28 AM. Single user license only. Copying and networking prohibited.

3.1 Symbols

I	Current
R	Resistance
J	Current density
U	Voltage
a	Year
E_{Ag}	Metal-to-electrolytic solution potential with respect to a silver/silver chloride reference electrode
E_l	Limiting critical potential
E_n	Free corrosion potential
E_{off}	Instantaneous off potential
E_{on}	On potential
E_p	Protection potential
E_H	Metal-to-electrolytic solution potential with respect to a standard hydrogen electrode
E_{Zn}	Metal-to-electrolytic solution potential with respect to a zinc electrode
I_a	Anode current output
I_p	Protection current
J_p	Protection current density (A/m^2)
r_c	Specific coating resistance ($\Omega \cdot m^2$)
T	Temperature
t	Time
ρ	Resistivity ($\Omega \cdot m$)

3.2 Terms and definitions

3.2.1
anaerobic
without free oxygen in the electrolytic solution adjacent to a metallic structure

3.2.2
anodic area
part of a structure surface which acts as an anode

3.2.3
cathodic area
part of a structure surface which acts as a cathode

Licensed to Pattaraporn Sritrakool. ANSI store order # X_271503. Downloaded 4/23/2012 7:28 AM. Single user license only. Copying and networking prohibited.

3.2.4
cathodic protection system
entire installation, including passive and active elements, that provides cathodic protection to a structure

3.2.5
coating defect
discontinuity in the protective coating

3.2.6
coating resistance
electrical resistance between a coated metal and the electrolytic solution

NOTE It is determined largely by the size and number of coating defects and coating pores and is therefore indicative of the condition of the coating (see also specific coating resistance).

3.2.7
continuity bond
bond designed and installed specifically to ensure electrical continuity

3.2.8
continuous anode
long flexible anode

3.2.9
coupon
representative metal sample of known weight and dimensions used to quantify the extent of corrosion or the effectiveness of applied cathodic protection

3.2.10
drinking water
water in conformity with European directive 98/83/CE from November 3, 1998

3.2.11
electrical continuity
state within a protected structure in which the circulating current does not produce a significant voltage drop

3.2.12
electrical isolation
state in which there is no metallic electrical path between structures or components

3.2.13
electrical shielding
intervening objects that prevent the flow of the current through the electrolytic solution to a structure

3.2.14
equalising current
current that flows between two separate points after interruption of the protection current

NOTE Equalising currents can flow, for example, as a result of removing cathodic protection current from a structure with components exposed to different depolarisation conditions.

3.2.15
foreign cathode
metal part fitted in the protected structure which has a more positive free corrosion potential than the protected structure and which requires a greater current density than the protected structure to achieve cathodic polarisation

NOTE Foreign cathodes can seriously impair the cathodic protection of the rest of the structure.

3.2.16
impressed current anode
anode in an impressed current station

Licensed to Pattaraporn Sritrakool. ANSI store order # X_271503. Downloaded 4/23/2012 7:28 AM. Single user license only. Copying and networking prohibited.

NOTE Impressed current anodes can be permanent anodes or soluble anodes.

3.2.17
impressed current station
equipment and materials required to provide cathodic protection by impressed current

NOTE Such materials and equipment will include impressed current anodes, cables, sensing electrodes, and transformer rectifiers.

3.2.18
off potential
structure to electrolytic solution potential measured immediately after synchronous interruption of all sources of applied cathodic protection current

3.2.19
IR drop
voltage developed across a resistance, or resistive path, in accordance with Ohm's Law ($U = I \times R$ V)

3.2.20
IR -free potential
potential measured without the voltage error caused by the IR drop ($E_{IR\ FREE}$)

3.2.21
isolating joint
electrically discontinuous joint or coupling between two lengths of pipe, inserted in order to provide electrical discontinuity between them

3.2.22
measuring point
point at which the actual measurement takes place

NOTE In the case of structure to electrolytic solution potentials this refers to the location of the reference electrode.

3.2.23
on potential
structure to electrolytic solution potential measured with the structure cathodic protection current flowing

3.2.24
overprotection
state in which the structure to electrolytic solution potentials are more negative than those recommended for satisfactory cathodic protection

NOTE Overprotection provides no useful function and can cause damage to the structure by excessive production of gases which can constitute an explosion hazard, embrittlement of metals, or protective coating damage.

3.2.25
permanent anodes
impressed current anodes for which the rate of corrosion is much smaller than the rate calculated in accordance with Faraday's Law

3.2.26
permanent reference electrode
permanent installed reference electrode designed for a long life

3.2.27
potential gradient
difference in potential between two separate points in the same electrolytic solution

Licensed to Pattaraporn Sritrakool. ANSI store order # X_271503. Downloaded 4/23/2012 7:28 AM. Single user license only. Copying and networking prohibited.

3.2.28
potentiostat
protection current device by means of which the structure/electrolytic solution potential is brought and maintained to a prescribed level despite variations in polarisation conditions

NOTE The current delivered by the generator, the protection current, is controlled by the structure potential measured by a reference electrode.

3.2.29
protected structure
structure to which cathodic protection is effectively applied

3.2.30
protection current (I_p)
current made to flow into a metallic structure from its electrolytic environment in order to effect cathodic protection of the structure

3.2.31
resistance bond
bond with significant resistance to limit the flow of current to within prescribed limits

NOTE Resistance can be achieved by the insertion of resistors into the bond connection.

3.2.32
soluble anode
impressed current anode which is consumed in accordance with Faraday's Law by the impressed anodic current

NOTE The adjectives soluble and sacrificial used alone do not specify if anodes are working by galvanic action or by impressed current. To avoid confusion it is proposed to apply the following convention: "galvanic anode" for sacrificial galvanic anode; "soluble anode" for soluble impressed current anode.

3.2.33
standard reference electrode
reference electrode whose potential does not depend on the concentrations of various elements in the electrolytic solution of the corrosion system

3.2.34
sensing electrode
permanently installed reference electrode used to measure the structure to electrolytic solution potential and to provide a signal to control the protection current of an automatic impressed current system

3.2.35
silver/silver chloride reference electrode
Ag/AgCl reference electrode
electrode consisting of silver, coated with silver chloride, in an electrolytic solution containing chloride ions

NOTE The potential of this electrode changes when the electrolytic solution concentration of the chloride ions changes (see annex B).

3.2.36
silver/silver chloride standard electrode
Ag/AgCl standard electrode
reference electrode consisting of silver, coated with silver chloride, in an electrolytic solution containing a fixed concentration of chloride ions

3.2.37
specific coating resistance
measurement derived from the variation of potential induced by a variation of the protection current i.e. the absolute value of the variation of potential divided by the corresponding variation of current density (see 7.4)

NOTE This is expressed in $\Omega \cdot m^2$.

Licensed to Pattaraporn Sritrakool. ANSI store order # X_271503. Downloaded 4/23/2012 7:28 AM. Single user license only. Copying and networking prohibited.

3.2.38
standard hydrogen electrode
reference electrode consisting of platinum, in an electrolytic solution containing hydrogen ions at unit activity and saturated with hydrogen gas at one standard atmosphere

3.2.39
structure (to electrolytic solution) potential
corrosion potential of a structure in a given corrosion system

NOTE The contact of the reference electrode with the electrolytic solution must be close to the structure to minimise errors due to the voltage drop associated with any current flowing in the electrolytic solution.

3.2.40
sulphate reducing bacteria
bacteria which reduce sulphates in their environment, producing sulfides which accelerate the corrosion of structural materials

NOTE This group of bacteria is found in most soils and natural waters, but is active only under anaerobic conditions of near neutrality and free of oxygen.

3.2.41
transformer-rectifier
device that transforms the alternating voltage and then rectifies it to direct current

NOTE Direct current derived in this way is used as a power source for impressed current cathodic protection systems.

3.2.42
utilisation factor
proportion of a galvanic anode that may be consumed before the anode ceases to provide a current output in accordance with the cathodic protection design

4 Principle and criteria for internal cathodic protection

4.1 Principle

The decrease of the corrosion rate is achieved by lowering the corrosion potential to reach the protection potential range. Cathodic protection is achieved when all the metallic surfaces to be protected have reached the protection potential range.

The lowering of the potential is achieved by means of a protection current passing from the electrolytic solution to the metal surface. This current enters the electrolytic solution from the surface of an anode.

Throughout clause 4 all electrode potentials are IR-free potentials.

4.2 Criteria

The protection potential depends on the physical and chemical conditions at the interface between the metal and the electrolytic solution. The coverage of the metal by calcareous deposits and the rate of diffusion of ions issuing from metal are different according to the medium.

Protection potential values are determined by practical experience.

One single potential criterion cannot cover the range of different situations that arise in internal cathodic protection applications.

The only criterion that cannot be disputed is a lack of corrosion established by inspection.

Some practical values are listed in Table 1. Precautions additional to those listed may need to be taken to protect against effects caused by the simultaneous presence of different metals or by the precipitation of some ions.

Licensed to Pattaraporn Sritrakool. ANSI store order # X_271503. Downloaded 4/23/2012 7:28 AM. Single user license only. Copying and networking prohibited.

Overprotection needs to be avoided on internal cathodic protection. Overprotection will result in the formation of gases. Some metal may be subject to specific damages at very negative potentials. It is essential that their potential is not brought to values lower than the limiting critical potential given in Table 1.

Table 1 — Guidance values of protection potential range with respect to the standard hydrogen electrode

Metal	Electrolytic solution	Protection potential, E_H	Limiting critical potential
		V	
Iron and low alloy steel	Neutral cold water	- 0,55	
	Hot water	- 0,65	
	Acid water or presence of bacteria	- 0,65	
Low alloy steel coupled with stainless steel	Cold or hot water	- 0,55	See footnote [a]
Stainless steel	Cold or hot water	-0,1	See footnote a
Copper and copper alloy	Cold or hot water	- 0,20	
Tin	Cold or hot water	- 0,35	- 1,0
Zinc	Cold or hot water	- 0,90	- 1,0 [b]
Lead	Neutral cold water	- 0,33	- 0,65
Aluminium and alloys with Magnesium or Manganese	Cold or hot water	- 0,45	- 0,80 [b]
	Sea water	- 0,55	- 0,80 [b]
Aluminium zinc alloys	Cold or hot water	- 0,60	- 0,80
	Sea water	- 0,70	- 0,90
Titanium	Sea water		-0,75

[a] Protection potentials shall be determined by testing in each case as well as the limiting critical potentials for ferritic and martensitic steel. There is no limiting critical potential for austenitic steel.

[b] Aluminium and zinc cannot be polarised to such a negative potential that the anodic reaction rate becomes negligible. These metals are self protected by their oxidation products. Cathodic polarisation can regularise this initial oxidation.

When the metal potential is measured between the metal and a reference electrode other than a standard hydrogen electrode, the E_H metal potential with respect to the standard hydrogen electrode is calculated as follows:

$E_H = E_M + E_R$; or

$E_M = E_H - E_R$ (see annex B)

where

E_M is the measured algebraic value of the potential difference between the metal and the reference electrode;

E_R is the measured algebraic value of the potential difference between the reference electrode and a standard hydrogen electrode.

Licensed to Pattaraporn Sritrakool. ANSI store order # X_271503. Downloaded 4/23/2012 7:28 AM. Single user license only. Copying and networking prohibited.

Table 2 — Potentials of some electrodes with respect to the standard hydrogen electrode

Electrode type	Electrolytic solution	Electrode potential, E_R V	Field of use
Standard electrode			
Copper/copper sulphate	Saturated copper sulphate	+ 0,32	Soil
Silver/silver chloride (saturated)	Saturated potassium chloride	+ 0,20	Sea water – Fresh water
Thallium/thallium chloride	3.5 M potassium chloride	- 0,57	Hot water
Permanent reference electrode			
Zinc/sea water	Sea water	- 0,77 approx.	Sea water
Silver/silver chloride	Sea water	+ 0,25 approx. [a]	Sea water
	Fresh water	+ 0,35 approx. [a]	Fresh water containing chlorides

[a] These potentials change with chloride concentration; the variation is about 60 mV at 30 °C for each ten-fold change in concentration (see annex B).

5 Factors affecting design and application

5.1 Different metals

It is necessary to consider all the possible operating conditions and then determine whether or not a range of protection criteria can be established.

If different metals are protected by cathodic protection, then the least noble metal needs to reach its protection potential. It is essential that the protection potential ranges of the various metals are not incompatible.

5.2 Electrolytic solution conductivity

There needs to be a continuous electrolytic contact between the surfaces of the protected structure and the protective anodes ensuring a sufficient distribution of current. Internal cathodic protection is not possible when the liquid on the whole is non-conductive.

5.3 Electrical continuity

The structure to be protected needs to be electrically continuous. Individual components of the structure need to be connected with low resistance metallic bonds.

5.4 Current distribution

The current distribution needs to be able to achieve the protection potential range on each point of the entire structure.

The factors improving current distribution are the following:

— high electrolytic solution conductivity;

— high polarisation resistance (the polarisation resistance can be improved by coating);

— surface and positioning of the anodes;

— design of the structure to be protected.

Licensed to Pattaraporn Sritrakool. ANSI store order # X_271503. Downloaded 4/23/2012 7:28 AM. Single user license only. Copying and networking prohibited.

Very low conductivities, e.g. in de-ionised water, can result in such an inadequate distribution of current that cathodic protection cannot be achieved at all points and need specific and wide distribution of anodes.

5.5 Current density

The current density necessary for the protection of metallic surfaces is dependent upon the following parameters:

— composition of the electrolytic solutions;

— service conditions (e.g. flow rate, temperature);

— coating properties including the permeability of the coating to water, ions and oxygen and its electrical conductivity;

— characteristics of the structure.

In general the necessary initial current density is greater than the current density in a polarised stable operating state.

5.6 Coating properties

When, coatings are applied, it is necessary to examine whether the coating presents the required properties for a sufficiently long time under service conditions.

Possible impairments of the coating are the following:

— disbonding;

— cathodic disbonding at coating defects;

— blistering in the coating;

— alkaline saponification.

When cathodic protection is to be applied to an existing coating the design shall make provision for the future deterioration of the coating.

Resistance to deterioration depends upon the kind of coating and the kind of the surface preparation.

Experience gained from the external cathodic protection of structures cannot be applied to internal cathodic protection of coated or lined structures.

5.7 Side effects

Electrochemical reactions may produce the following conditions:

— evolution of gases;

— corrosion products from anodes;

— deoxygenation;

— cathodic products on the protected structure.

Licensed to Pattaraporn Sritrakool. ANSI store order # X_271503. Downloaded 4/23/2012 7:28 AM. Single user license only. Copying and networking prohibited.

It is necessary to examine which electrolytic reactions occur on the protected structure and on the anodes and to what extent these reactions interfere with the function of the protected item, e.g. with respect to the following:

— a contamination of the medium by reaction products of the electrode materials;

— an electrochemical reaction of constituents of the medium;

— an interfering accumulation of gases, in particular hydrogen.

The changes in the electrolytic solution caused by the electrochemical reactions shall not alter certain properties of the electrolytic solution (e.g. drinkability, metal-ionic concentration).

For example, oxygen consumption on the cathode can cause anaerobic conditions to develop in drinking water which, in combination with sulphate reducing bacteria, results in a bad odour from hydrogen sulfide.

Depending on the extent of these possible impairments, the following are to be taken into consideration in the design:

— type and surface of the anodes;

— reduction of current density requirements by use of a coating;

— gas venting;

— anodic current density.

5.8 Lifetime

As far as type, number, geometry and lifetime of the anodes are concerned, it is necessary when designing a cathodic protection system to take the lifetime of the protected structure into consideration. If necessary, adequate maintenance intervals are to be prescribed.

6 Design and application of internal cathodic protection

6.1 Design

The following documents shall be made available for the design:

— construction drawing of the structure to be protected with details of the materials used;

— chemical composition of the medium with details on its possible fluctuations;

— details on the service conditions with details on their fluctuations: height of the medium, temperature, velocity, pressure.

The design shall be undertaken by competent personnel having sufficient knowledge and experience in the application of internal cathodic protection systems. At this stage it is necessary to consider whether or not the application of cathodic protection will have any effect on the function or operation of the structure to be protected. The selection of coating should take into account the compatibility with the proposed cathodic protection system.

6.2 Design of the structure to be protected

The following measures shall be undertaken in the design of the structure to be protected:

a) the equipotential bonding of components by means of metallic electrical connections;

b) where high resistance insulating coatings are used, the electrical isolation of certain components;

c) the use of insulated flanges and bushings for cable, anodes and reference electrodes;

Licensed to Pattaraporn Sritrakool. ANSI store order # X_271503. Downloaded 4/23/2012 7:28 AM. Single user license only. Copying and networking prohibited.

d) the provision of connection points for anodes and, if necessary, cathodes;

e) the elimination or special coating of parts of the structure that are exposed to air and cannot be cathodically protected;

f) the installation of manholes, covering boxes, fixing devices and cables;

g) the provision of electrical safety measures and protection against electrical contact;

h) where there is any risk of gas build up, the installation of gas venting systems.

6.3 Influence of foreign cathodes

In the presence of foreign cathodes caused by multiple metals the provisions of 5.1 shall be applied.

If the cathodic protection of the structure is adversely affected by such cathodes then one or both of the following measures shall be taken to ensure effective cathodic protection:

— adjust the number and location of cathodic protection anodes;

— electrically isolate parts of the structure.

When it is necessary to electrically isolate parts it may be useful to introduce resistive bonds between these parts and cathodes to ensure that unacceptable anodic corrosion is avoided on the isolated part.

Non-metallic electron conducting materials such as charcoal can impair current distribution on the structure to be protected. In this case it is essential that electrical insulation of the structure from conducting materials is achieved.

6.4 Isolating joints

Wherever possible, interruptions to the electrical continuity of the structure to be protected should be avoided. If isolating joints are nevertheless used they can introduce a risk of corrosion by concentrating current flow from the isolated part or foreign cathode to the main part of the structure at the isolating joint itself (see Figures 1 and 2).

This risk is determined mainly by the level of d.c. current, the conductivity of the electrolytic solution, and the length of the isolation joint, but not by the corrosiveness of the electrolytic solution.

The distance between parts separated by the isolating piece shall be designed in such a way that the current flowing from the isolated part to the main part of the structure causes only negligible corrosion damage.

It is essential that the insulated pieces and insulating components withstand the electrical, mechanical, thermal and corrosive chemical stresses which develop in the installation and during service.

The isolating materials used shall not contain any electron conducting filling materials.

Isolating pieces in areas where there is a danger of explosion shall conform to the requirements of EN 50014.

6.5 Anode

6.5.1 General

The selection of the anode will depend of the electrolytic solution and such service conditions as:

— no evolution of hydrogen gas;

— no evolution of oxygen gas;

— no decrease of oxygen concentration;

Licensed to Pattaraporn Sritrakool. ANSI store order # X_271503. Downloaded 4/23/2012 7:28 AM. Single user license only. Copying and networking prohibited.

— no addition to the electrolytic solution of components due to the oxidation of the anode.

6.5.2 Galvanic anodes

The current delivered by galvanic anodes can depend very strongly on the respective media.

Galvanic anodes can be used if the reaction products of the anodes do not interfere and if their potential at current delivery is more negative than the protection potential. The difference required depends on the specific coating resistance and of the electrolytic solution resistivity.

Common galvanic anodes are the following:

— magnesium anodes;

— aluminium and zinc anodes (only for water of high conductivity).

Galvanic anodes are consumed by current delivery and self corrosion. Not all of the anode material will be efficient and a utilisation factor shall be included in the current capacity and anode lifetime design calculations.

The operating conditions within vessels and equipment, in particular, pH and temperature can affect anode-operating capacities.

Strongly acidic or alkaline conditions will increase self-corrosion of common alloy materials and hence reduce capacity.

Consideration should be given to installation and replacement requirements of galvanic anodes.

6.5.3 Impressed current anodes

Materials which can give off a high current at a low voltage are used as impressed current anodes.

The performance of the same anode in different electrolytic solutions will be different and if necessary, details of anode performance should be obtained from the anode manufacturer.

Soluble anodes are used if the reaction products assume additional functions or if anodic formation of oxygen needs to be avoided. Soluble anodes are consumed by self corrosion and by current delivery. A utilisation factor shall be included in the current capacity and in anode lifetime design calculations.

Common impressed current anodes are:

— silicon iron (SiFe);

— graphite;

— precious metals such as platinum (Pt);

— precious metal coatings on the basis metal (e.g. Pt, Ir, Pd on Ti, Nb, Ta);

— non-metallic oxide coating on basis metal;

— mixed metallic oxide coating on a substrate metal;

— polymer anodes.

With precious metals and precious metal coatings, it is necessary to take into consideration the fact that they can catalyse the inflammation of hydrogenous gas mixtures.

Licensed to Pattaraporn Sritrakool. ANSI store order # X_271503. Downloaded 4/23/2012 7:28 AM. Single user license only. Copying and networking prohibited.

With platinum coated substrate metals, maximum anode potentials, which depend on the medium and on the substrate metal, are to be taken into consideration. Reference values (with respect to standard hydrogen electrode) are;

— Pt/Ti-c(Cl^-) < 1 g/l 13 V;

— Pt/Ti-c(Cl^-) > 1 g/l 6 V;

— Pt/Nb-c(Cl^-) > 1 g/l 40 V;

— Pt/Ta-c(Cl^-) > 1 g/l 120 V.

Anode to electrolytic solution voltages need, therefore, to be suitably limited.

In the presence of other halogenide ions or complexing agents, these reference values may be smaller.

If there is no available experience for such values, the break-down voltage has to be ascertained experimentally.

The life of the platinum film can be affected by the magnitude and frequency of the ripple present in the d.c. supply.

Transformer rectifiers with fullwave rectification are preferable to halfwave rectification.

6.6 Anode construction

The current distribution requirements for a given geometry of the protected object determine the number and the positioning of the anodes. Common forms of anodes are: wires, wire mesh, rods, profiles, plates, blocks, spheres, spherical segments.

6.7 Current sources

The protection current sources should be equipped with visual control indicators. The protection current sources need to meet the requirements resulting from conditions quoted in 5.5.

There are different types of transformer-rectifiers:

— devices with constant *U* or *I* characteristic values at the output;

— grading or controlling device;

— potentiostat (automatic).

The whole assembly, which may be wall-mounted is often required to be weatherproof and sometimes certified for use in hazardous atmospheres.

The current source shall be protected against damage caused by surges on the input supply caused by lightning.

There shall be a relevant connection between the negative terminal of the rectifier and the protected structure. In case of high currents (amps.) the structure shall be directly connected to the ground and not through the generator terminal to avoid development of an electrochemically significant potential difference between the ground and the structure.

6.8 Placing of reference electrodes for potential measurements

Depending upon the requirements of the cathodic protection system it may be necessary to install permanent reference electrodes (see 8.2). The location of the permanent measurement points should take into account the following points:

— areas where the least protection is anticipated;

Licensed to Pattaraporn Sritrakool. ANSI store order # X_271503. Downloaded 4/23/2012 7:28 AM. Single user license only. Copying and networking prohibited.

— areas where the current distribution is likely to be shielded;

— areas where the most protection is anticipated (particulary important if overprotection is critical).

These measures should enable a potential distribution curve to be constructed.

6.9 Safety instructions

6.9.1 Danger of electric shock

The current normally used for impressed current internal cathodic protection is rectified a.c. taken from a step down transformer and a rectifier.

Protection against electric shock shall be secured for suitable measures against direct and indirect contact according to HD 384.4.41 S2 or equivalent national safety standards (e.g. SELV).

6.9.2 Evolution of dangerous gases

6.9.2.1 General

Cathodic protection can build up gaseous hydrogen, gaseous oxygen and chlorine.

Some mixtures of oxygen and hydrogen are explosive; chlorine can be toxic and corrosive.

The formation of gases can be kept to a minimum by the incorporation of a system of automatic control into the cathodic protection installation and by carefully designing the distribution of the anodes.

Where impressed current internal cathodic protection is used in vessels normally containing hazardous atmospheres, provision shall be made to prevent sparking if the anode is operated outside liquid level.

Procedures to be adopted may include positioning of anode so that it is always submerged and/or incorporation of emergency shut down procedures so that if the anode is temporary exposed all dc current is disabled.

6.9.2.2 Release of hydrogen gas

In impressed current systems, and with galvanic anodes (particulary magnesium anodes), excessive polarisation can cause evolution of hydrogen gas on the protected structure. Thus, in situations such as closed tanks where hydrogen can collect, an explosion hazard can arise. To avoid this hazard, it is necessary for all designs to include adequate venting to prevent the build up of a significant gaseous volume of hydrogen.

Where hydrogen evolution could produce an explosion hazard, the structure/electrolytic solution potential should be carefully monitored.

6.9.2.3 Chlorine evolution

For an impressed current cathodic protection in electrolytic solutions having a high rate of chloride, specially at low pH, the anodic reaction can result in the electrolytic formation of chlorine. Such a formation can cause either physical discomfort or downstream corrosion effects.

In order to reduce chlorine production, the anodic current density can be reduced by a reduction in the cathodic protection demand current and by an increase in the surface area of the anodes.

6.9.3 Emptying and opening

Before opening an enclosed structure the impressed cathodic protection system shall be turned off. The structure shall be completely filled with electrolytic solution and degassed. Only after that may the structure be emptied with the intake of air and opened.

Licensed to Pattaraporn Sritrakool. ANSI store order # X_271503. Downloaded 4/23/2012 7:28 AM. Single user license only. Copying and networking prohibited.

6.9.4 Measures for unsteady operation

It is necessary to establish whether any special precautions should be taken to cater for intermittent operation, change of use, variations in temperature and levels of concentration, and flow rate. Such provisions should include one of the following:

— manual or automatic adjustment of the transformer rectifier output; or

— automatic switching off.

If a protected structure is affected in this way then plant specific instructions shall be detailed in an operating manual. Instructions for re-commissioning the cathodic protection system shall also be detailed in the operating instructions.

7 Measurements

7.1 General

Measurements are necessary to ascertain the effectiveness of a cathodic protection system before commissioning.

7.2 Insulation measurements

In impressed current cathodic protection systems, insulation between each one of the independent anodes and the cathode needs to be measured in the absence of electrolytic solution.

If isolation joints are to be installed, the insulation resistance shall be checked. Isolation joints can be considered as satisfactory if the resistance is greater than 100 kΩ with an applied voltage of 500 volts. The in-circuit resistance of isolation joints may be considered as satisfactory when it is greater than 500 Ω (in the absence of electrolytic solution). This reduced value takes into account the resistive effects of other equipment (see 6.4).

7.3 Direct current measurements

In order to measure direct current an ammeter or a shunt is normally inserted in series in the circuit.

When different anodes are connected to the same rectifier the current output of each circuit shall be measured. It should be noted that the ammeter's internal resistance could distort the measurement.

For galvanic anodes, where facilities are provided for the readings of the current output, it is essential to select an ammeter or systems that will not significantly affect the circuit resistance.

7.4 Coating resistance measurement

The specific coating resistance is calculated from the following equation:

$$r_c = \frac{U_2 - U_1}{J_2 - J_1}$$

where

U_1 and U_2 are stable values of electrode potentials obtained during normal operating conditions;

J_1 and J_2 are the corresponding current densities.

Licensed to Pattaraporn Sritrakool. ANSI store order # X_271503. Downloaded 4/23/2012 7:28 AM. Single user license only. Copying and networking prohibited.

7.5 Potential differences measurement

7.5.1 Voltmeters

The potential difference between the protected metal and its surrounding electrolytic solution shall be measured using a reference electrode and a voltmeter with an input resistance in excess of 10 MΩ.

Voltmeters used for potential measurements should be insensitive to alternating voltage superimposed on the potential being measured.

7.5.2 Connection

The connection to the structure may be made to any part of the structure and efficient metal to metal contact is essential. It is also essential that there is a continuous low resistance metallic circuit between the point of connection and the part of the structure nearest to the reference electrode. Connection should not be made to cables carrying a cathodic protection current.

7.5.3 Reference electrodes

The type of reference electrode should always be stated.

The potentials of various reference electrodes with respect to the standard hydrogen electrode are given in Table 2.

7.5.4 Correction for the “IR” potential drop

When the protective current is flowing, the IR potential drop between the reference electrode and the structure surface is included in the measurement of the structure/electrode potential.

When the current is switched off the IR drop collapses immediately. In many cases the structure's electrode potential changes more slowly so that a reading immediately after switch off represents the correct electrode potential.

The rate at which the potential difference decreases after the switching off gives an indication of the validity of the potential measured “immediately” after switching.

In cases where depolarisation is very fast, recording or data logging can be required.

If different metals are present in the structure protected, current will be exchanged between them immediately after switching-off introducing some additional error.

The IR free potential may be measured by means of a reference electrode placed immediately in contact with the area in question or by using switchable coupons, if it is possible by mechanical conditions.

8 Commissioning

8.1 General

Commissioning measured values should be recorded and stored as a permanent record for future reference. These readings should form an integral part of the detailed operation and maintenance documentation.

8.2 Potential measurement

Structure (to electrolytic solution) potential should be measured both before and after the cathodic protection system is put into operation.

One or more reference electrodes should be installed.

If the current distribution is well known due to experience or simple geometry then only one reference electrode is necessary.

Licensed to Pattaraporn Sritrakool. ANSI store order # X_271503. Downloaded 4/23/2012 7:28 AM. Single user license only. Copying and networking prohibited.

In the case where multiple reference electrodes are installed in closed structures the potential variation between the reference electrodes should ideally be within ± 50 mV when the cathodic protection is operating.

8.3 Commissioning of protection devices under manual control

When the cathodic protection system is put into service the current output needs to be adjusted to provide the protection potentials defined in the specifications. Individual anode currents and reference electrode potentials should be noted. Potentials less negative than required by the specification may be temporarily acceptable. Structure-to-electrolytic solution potentials should be measured 2 months after putting the cathodic protection system into service. If necessary, further adjustments should be made to the cathodic protection current output until the protection potential defined in the specifications is obtained.

8.4 Commissioning of protection devices under automatic control

The automatic control needs to be set to ensure that the required structure-to-electrolytic solution potential is achieved although potentials less negative than required by specification may be temporarily acceptable. The individual anode current and reference electrode potentials should be noted. It should be verified that the automatic system will provide sufficient current to maintain cathodic protection when the worst conditions prevail.

8.5 Commissioning of protection devices using galvanic anodes

8.5.1 Structures with high resistance coatings

Structures with high resistance coating will require less cathodic protection current than bare, or poorly coated structures. In such cases it is not necessary to measure the anode current output unless the information is required for design verification. Mass produced structures need not have a measuring facility.

8.5.2 Uncoated structures or structures with low resistance coatings

Anode current output should be controlled when the structure is uncoated or has a low resistance coating. With galvanic anodes, because of the small potential difference between galvanic anodes and the structure, current distribution can be more difficult to achieve and should be carefully monitored. This may not be necessary if sufficient experience has been obtained from similar structures.

Potentials less negative than required by the specification may be temporarily acceptable.

9 Operation and maintenance

9.1 General

The effectiveness of the internal cathodic protection system may be assed by measuring the structure electrode potential, by visual inspection of the protected surface or by incorporation of corrosion monitoring devices (such as corrosion coupons or electrical resistance probes). For the later, the effectiveness of the cathodic protection system may be determined by comparing the measured corrosion rate of probes that are directly connected to the vessel to the corrosion rate of probes that are deliberately isolated from the vessel (and hence will received no protection).

Visual inspections are the only way to be sure that all parts of the protected structure are effectively protected. To allow for this inspection there need to be accessible manholes.

For mass produced domestic water heaters it is permitted to omit such inspections when sufficient experience exists.

As a minimum of down time is usually demanded in industrial plants, the visual inspection may be restricted to one inspection if the measured potentials are within the expected range.

Licensed to Pattaraporn Sritrakool. ANSI store order # X_271503. Downloaded 4/23/2012 7:28 AM. Single user license only. Copying and networking prohibited.

9.2 Impressed current devices

9.2.1 General

Impressed current installation power sources should be checked at least every 12 months. The checks should include a general wiring check, voltage and current output of the power source, structure-to-electrolytic solution potentials with the power on, and the depolarisation when the power is off. These checks should only be undertaken by experienced personnel.

The measured values shall be registered in the logbook.

9.2.2 Manual control

The current output and the structure-to-electrolytic solution potential should be monitored at suitable intervals dictated by experience (e.g. monthly at first). If significant changes occur current output adjustments should be made by experienced personnel. If frequent variations in operating conditions occur then adjustments should be made for each operating condition to maintain the required structure-to-electrolytic solution potential.

9.2.3 Potentiostatic (automatic) control

After commissioning, the potentiostatically controlled transformer-rectifier should maintain a stable structure-to-electrolytic solution potential as measured by a sensing reference electrode. An appliance displaying the structure potential or some means to show that the desired structure potential has been achieved, shall be installed. This indication should be checked regularly, e.g. daily. Instructions shall be provided for unsatisfactory situations. The accuracy and long term stability of the sensing electrode should be checked against a calibrated reference electrode.

9.3 Galvanic anode devices

Yearly visual inspection of the cathodically protected surface and of the consumption of the anodes is essential to ensure the continuing efficiency of the protection. At least a yearly check of the current output of the anodes and of the structure electrode potential is essential except for structures covered with very high resistance coatings in which it is permitted to omit such checks if experience exists from identical models.

10 Cathodic protection of domestic water heater

10.1 General

This clause deals with the cathodic protection of water heaters with coatings and a capacity of less than 750 l (for larger tanks see clause 11). Clauses 1 to 9 apply unless otherwise indicated.

The requirements specified in this clause are to ensure that the cathodic corrosion protection with anodes (galvanic anodes, anodes with impressed current) is, and remains, efficient.

Domestic water heaters having an internal galvanic anode shall be designed in such a way that the anode can be inspected e.g. by the owner or a plumber. The manufacturer shall supply a description of how the inspection shall be carried out and how often this shall be done.

Domestic water heaters having an internal galvanic anode shall have a clearly legible label on the external surface of the heater, informing the owner that the heater contains a galvanic anode for corrosion protection and that the anode shall be inspected at regular intervals and renewed when necessary.

10.2 Criterion

4.2 is amended as follows.

The protection potential range for hot water is $E_H < - 0,63$ V.

Licensed to Pattaraporn Sritrakool. ANSI store order # X_271503. Downloaded 4/23/2012 7:28 AM. Single user license only. Copying and networking prohibited.

10.3 Electrolytic solution

Clause 1 is amended as follows.

— temperature (2 - 98) °C (see EN 60335-2-21);

— conductivity > 10 mS/m, 20 °C;

— pH-value > 5,5.

10.4 Foreign cathodes

See 6.3.

The corrosion protection should not be affected by metal appliances installed in the space occupied by the electrolytic solution (for example foreign cathodes such as heat exchangers). If these foreign cathodes are not isolated from the structure, careful anode (or anodes) positioning is required to achieve cathodic protection.

10.5 Current densities

In addition to 5.5 the following factor should be taken into account.

High current densities in connection with long stagnation may lead to a danger of hydrogen evolution.

10.6 Coating properties

In addition to 5.6 the following particulars should be taken into account.

The following coatings are used for domestic water heaters:

— enamel;

— organic coatings;

— mineral coatings;

— galvanised coatings.

The function of a coating is to reduce the protection current. The coating shall not affect the quality of the drinking water as defined by directive 98/83/CE from November 3, 1998.

10.7 Effects resulting from electrolytic reactions

In addition to 5.7 the following considerations apply.

In the case of long stagnation, hydrogen evolution by cathodic protection can become significant. Hydrogen can be produced by high cathodic current densities. Galvanic anodes evolve hydrogen at the anode by self corrosion. So it is important to have a low mass consumption rate of the anode.

Impressed current anodes normally evolve oxygen at the anode. In water with high chloride content the anode reactions can also result in the formation of chlorine.

In order to reduce the chlorine evolution in water heaters, impressed current anodes with large surface should be used.

The corrosion products of anodes shall not affect the quality of drinking water as defined by directive 98/83/CE from November 3, 1998.

Licensed to Pattaraporn Sritrakool. ANSI store order # X_271503. Downloaded 4/23/2012 7:28 AM. Single user license only. Copying and networking prohibited.

10.8 Construction features

The items listed in 6.2 are amended as in Table 3.

Table 3 — Construction features for domestic water-heaters with cathodic protection applied

Requirements	Domestic water heater
1. Metallic conduction connection of all components for equipotential bonding	No
2. Electrical isolation of certain components	Yes
3. Installation of insulating bushings in the boilers for accommodation of cables, etc.	No
4. Installation of connection points for anodes and if useful for cathodes	No
5. Installation of fixing and covering boxes, fixing devices and cables	No
6. Earthing measures and safety measures against accidental contact	Yes
7. Installation of degassing devices	No

10.9 Isolating joints

In addition to 6.4 the following provisions shall apply.

When a metallic fitting is insulated from the protected structure by an insulating piece there is a danger of anodic corrosion of the fitting near the insulating piece (see Figure 1).

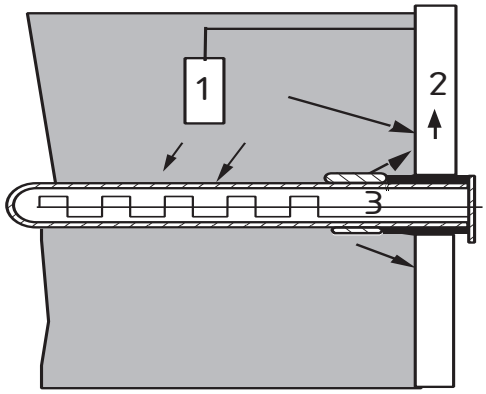

Key

- Electrolyte in the protected structure
- Metallic fitting
- Insulating piece
- Fitting's endangered area
- Path of the current

1 Anode

2 Protected object

3 Metallic appliance

Figure 1 — Path of current in a cathodically protected structure with an isolated metallic fitting inside : position of the isolating piece and of the endangered area

Licensed to Pattaraporn Sritrakool. ANSI store order # X_271503. Downloaded 4/23/2012 7:28 AM. Single user license only. Copying and networking prohibited.

In order to reduce the corrosion susceptibility of such fittings, it is useful to include balancing resistors between the fitting and the protected object.

When a piping system which also contains an electrolytic solution is isolated from both the protected object as well as from the piping by isolating pieces, there is a danger of anodic internal corrosion on the piping near the isolating piece (see Figure 2).

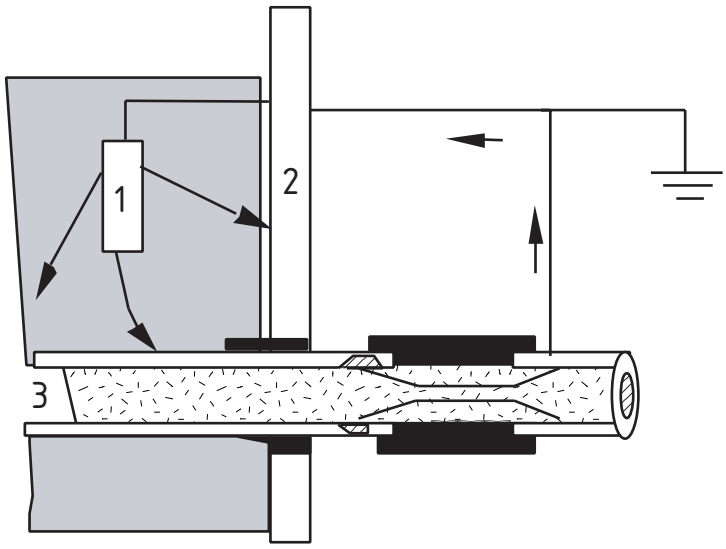

Key

Electrolyte in the protected structure

Electrolyte in the built-in piping system

Insulating pieces

Endangered area in the piping system

Path of the current

1 Anode

2 Protected object

3 Built-in piping system

Figure 2 — Path of the protective current in a cathodic protected structure with an electrolytic solution-carrying piping system: position of the isolating piece and of the endangered area

To reduce this corrosion to negligible values, the length of the internal isolation shall be designed in such a way that no anodic corrosion damage can develop in the inside of the pipes via the isolating piece as a result of the d.c. voltage caused by the protection system.

This danger is essentially determined by the level of the d.c. voltage (in general between 0,3 V and 1 V), the conductivity of the medium and by the length of the isolating piece, but not by the corrosiveness of the medium.

10.10 Galvanic anodes

In addition to 6.5 the following provisions shall apply.

Licensed to Pattaraporn Sritrakool. ANSI store order # X_271503. Downloaded 4/23/2012 7:28 AM. Single user license only. Copying and networking prohibited.

- Anodes shall fulfil electrochemical and physical requirements in accordance with the European Standards. The conformity of the technical characteristics with the technical requirements shall be checked in accordance with annex A;

- anodes shall allow the electrolytic solution to maintain the quality of drinking water as defined by directive 98/83/CE from November 3, 1998;

- construction and installation of anodes shall ensure sufficient stability during transport. The design of the mounting of the anode shall ensure that no leakage occurs after partial or total consumption of the anode.

10.11 Current sources

In addition to 6.7 the following provisions shall apply.

In the case of domestic water heaters the current delivered by the generator should generally be limited to 50 mA.

If the current exceeds 50 mA gaseous hydrogen evolution needs to be considered. With potentiostatic control the limit for gaseous hydrogen evolution shall be approximately 150 mA.

10.12 Release of hydrogen

In addition to 6.9.2.1 the following point needs to be considered.

In domestic water heaters the only way of minimising the danger of hydrogen release is careful design and application.

10.13 Measures for unsteady operation

In addition to 6.9.4 the following provisions shall apply.

Every 3 months the water content shall be changed. Should this not be the case, impressed current protection shall be stopped and the tank shall be emptied.

10.14 Commissioning

Clause 8 is amended as follows.

In the case of water heaters, commissioning shall be required for all new designs or change of operating conditions not previously experienced. For new equipment based on existing designs and conditions, where commissioning under similar conditions has been completed, then additional commissioning is not required.

Potential measurement are not necessary when the structure has a high resistance coating.

Nevertheless, they are required when developing a cathodic protection under conditions differing from those already experienced.

The efficiency of the cathodic protection system can be determined by a visual examination of the surface after at least 6 months under operational conditions.

Further examinations after several periods of 6 months improve the representativity of this test.

Examinations shall only be carried out by experienced personnel.

Commissioning can also be achieved by potential measurements alone.

When developing a new domestic water heater a profile of electrode potential should be established. The conditions of measurements depend on the nature of the coating.

Licensed to Pattaraporn Sritrakool. ANSI store order # X_271503. Downloaded 4/23/2012 7:28 AM. Single user license only. Copying and networking prohibited.

The results of inspections and/or measurements shall be reported in the product file.

The provisions of 8.5.1 and 8.5.2 apply.

10.15 Operation and maintenance

In case of mass produced domestic water heaters where full prototype testing has been carried out to verify the effectiveness of the design, inspection of the water heaters is not required. The consumption of galvanic anodes shall be periodically checked in accordance with the manufacturer's manual.

11 Cathodic protection of appliances for heating and storage of hot water

11.1 General

This clause deals with the cathodic protection of appliances for heating and storage of hot water with a capacity above 750 l. Clauses 1 to 9 apply unless otherwise indicated.

The requirements specified in this clause are to ensure that the cathodic corrosion protection with anodes (galvanic anodes, anodes with impressed current) is, and remains, efficient.

11.2 Electrical continuity

In accordance with 5.3 and 6.2 all parts of the protected tank shall be electrically bonded. For high current intensities electrical connection of covering-plates or tube-plates to the body of the tank through steel bolts and steel nuts is not effective in the long term. Special measures need to be taken in order to achieve long term bond-resistance values less than 0,1 ohms.

11.3 Current distribution

It is essential that current distribution results in a protection potential in every point of the protected tank.

In tanks used for the preparation and storage of hot water there are many situations requiring or producing uneven current distribution.

The factors listed in 5.4 shall be taken into account.

In particular the cathodic protection of the heat exchanger tubes and plate may require specific construction of the heat exchanger in order to allow access of protection current to all parts of the heat exchanger tubes.

11.4 Construction of inlet and outlet pipes

The distance that cathodic protection will penetrate is limited. It is necessary to take precautionary measures, for example:

— pipe diameter of at least 30 mm and length of inlet and outlet pipes not exceeding 1,5 times the diameter;

— use of stainless steel inlet and outlet pipes.

11.5 Discharge of gases

The final installation shall allow for the accumulation and venting of any possible gases produced as mentioned in 6.2, and 6.9.2.

The venting point shall be located at the highest point of the tank. The outlet should be located lower than the venting point (see Figure 3 for example.)

Licensed to Pattaraporn Sritrakool. ANSI store order # X_271503. Downloaded 4/23/2012 7:28 AM. Single user license only. Copying and networking prohibited.

Venting may be achieved automatically in combination with an on-demand manual venting facility to verify the correct operation of the automatic venting (see Figure 3) or by an automatic system combined with a level detector, or by a cyclic venting system.

Regular checks of the correct operation of the venting system shall be a part of the maintenance instructions.

The venting pipes shall discharge into a ventilated area or to the outside. They shall not encourage external corrosion (corrosion beneath cladding).

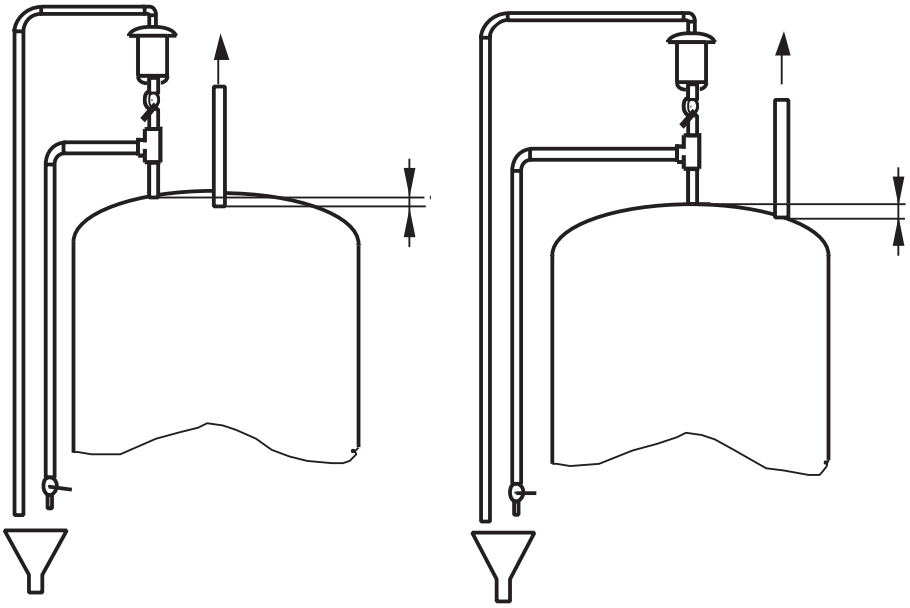

Figure 3 — Examples of locations of water and venting outlets

11.6 Manholes

To allow for the periodical inspection required in 9.1 accessible manholes shall be provided - see 6.2.

11.7 Emptying

In accordance with 6.9.3 the tank shall be completely filled and degassed before emptying and opening. This instruction shall be a part of the maintenance instructions.

The design of the apparatus shall render these operations easy.

11.8 Maintenance

Visual examination of the protected surface shall be carried out at least every 5 years. Yearly examination is recommended. Maintenance instructions shall be provided on a readily accessible place.

11.9 Variation of requirements

The requirements of 6.2 and 6.9 as well as the maintenance instructions from 9.1 and 9.2 may be varied dependent on the size of the tank and the type of installation. These variations are summarised in Table 4.

The parameters which have been taken into consideration are the following:

— current intensity;

— volume;

Licensed to Pattaraporn Sritrakool. ANSI store order # X_271503. Downloaded 4/23/2012 7:28 AM. Single user license only. Copying and networking prohibited.

— type of protection.

Table 4 — Variation of requirements according to the intensity, the size of tank and the type of protection

Parameters			Requirements			
Current intensity(I)	Volume (V)	Type of protection	Automatic venting	Accessible manhole	Potential measurement	Check of source
I > 150 mA	*V* > 750 L	*G* ; *I*	Yes	Yes	Yes	Yes
I > 150 mA	750 L > *V*	*G* ; *I*	Yes	No	Yes	Yes
150 mA > *I*	750 L > *V*	*G*	No	No	No	No
50 mA < *I* < 150 mA	*V* > 1 500 L	*G*	Yes	Yes	Yes	No
50 mA < *I* < 150 mA	1 500 L > *V* > 750 L	*G*	No	No	Yes	No
50 mA < *I* < 150 mA	*V* > 750 L	*I*	No	Yes	Yes	Yes
I < 50 mA		*G* ; *I*	No	No	No	No

NOTE 1 *G* = galvanic current ;

I = impressed current.

NOTE 2 No indicates that although the equipment is still recommended it is nevertheless possible, under the responsibility of the designer, to apply cathodic protection without fully complying with the requirements of 6.2 and 6.9.

12 Cathodic protection of structures with variable level feed tanks — condensates and similar appliances

12.1 General

This clause deals with the cathodic protection of structures with variable level feed tanks, condensates and similar. The clauses 1 to 9 apply unless otherwise indicated.

The requirements specified in this clause are to ensure that the cathodic protection with anodes (galvanic anodes, anodes with impressed current) is, and remains, efficient.

Feed tanks operate with significant fluctuations in the following items:

— salinity;

— level;

— temperature.

This brings in important variations of the current intensity needed for protection.

12.2 Galvanic anodes

Cathodic protection by galvanic anodes may be considered if the conductivity of the electrolytic solution is sufficiently high and if the only cause of variation of the protection current is the variation of level. If this is not the case, protection by impressed current shall be applied.

12.3 Anode construction

In addition to 6.6 the following provisions apply.

Anodes shall be conveniently distributed to afford protection against water-line corrosion, whatever the level.

Licensed to Pattaraporn Sritrakool. ANSI store order # X_271503. Downloaded 4/23/2012 7:28 AM. Single user license only. Copying and networking prohibited.

The correct current distribution in high resistance electrolytic solutions, such as condensates, requires large surfaces of anodes conveniently distributed. The anode construction shall withstand the important hydrodynamic constraints prevailing in these tanks.

12.4 Current sources

The provisions of 6.7 shall be implemented as follows.

Generators supplying current to the system of anodes shall be automatically controlled by the metal-electrolytic solution potential. This is the only way to avoid a damaging succession of over and under protection due to variations of electrolytic solution resistivity and variations of protected surface area.

The sensing electrode controlling the generator shall be situated lower than the minimum level expected for the electrolytic solution.

12.5 Evolution of gases in closed structures with variable level

As evacuation of gases is not possible in this case, it is essential that the formation of hydrogen is avoided. The cathodic protection of closed structures with variable level is only possible without unacceptable danger if the internal surface is covered with coatings exhibiting high polarisation resistance.

Anode construction and control system shall be designed to exclude any local overprotection.

In addition to 6.9.2. the following provisions shall apply.

It is recommended to install one or more permanent reference electrodes in addition to the sensing electrode controlling the generator in order to obviate an incidental deficiency of one of them. The potential differences of this or these additional electrodes should be within $\pm$ 50 mV. Greater differences should actuate an error message. Anomalies shall be immediately reported to authorised maintenance supplier.

Indication of the means to show that the desired stucture potential has been achieved shall be checked at least weekly. Instructions shall be provided for unsatisfactory situations.

Protection current intensity shall be strictly limited by a fuse calibrated according to the greatest area to be protected. The purpose of this fuse is to obviate the consequences of a deficiency of the automatically controlled generator.

The use of platinum or platinized anodes shall not be permitted for these appliances.

12.6 Maintenance

9 applies.

Yearly visual examination of the surface is recommended.

13 Cathodic protection of filtering tanks

13.1 General

This clause deals with the cathodic protection of filtering tanks. The clauses 1 to 9 apply unless otherwise indicated.

The requirements specified in this clause are to ensure that the cathodic protection with anodes (galvanic anodes, anodes with impressed current) is, and remains, efficient.

Due to variable conditions of speed and oxygen renewal, the current intensities needed for protection may be very important in some working conditions and much smaller in others.

Licensed to Pattaraporn Sritrakool. ANSI store order # X_271503. Downloaded 4/23/2012 7:28 AM. Single user license only. Copying and networking prohibited.

13.2 Current distribution

In addition to 5.4 the following provisions shall apply:

— internal equipment

The effect of cathodic protection is limited to the external surface of metallic equipment such as water or air collectors;

— filtering masses

The different conductivities in multilayer masses require different protection-current densities and undergo different current distributions. The design of cathodic protection system shall be adapted to these requirements.

It may be necessary to use separate d.c. current sources with individual control and individual measurement electrodes to adjust the protection current densities necessary for the different sections of the filter tank.

13.3 Effects resulting from electrolytic reactions

As mentioned in 5.7 cathodic deposits have to be kept to a minimum in filtering tanks in order not to interfere with hydraulic flow.

13.4 Construction design

Ozone and chlorine are often encountered with water to be filtered, making the atmosphere inside filters very corrosive. Occurrence of air filled cavities shall be avoided.

13.5 Measures for unsteady operation

As mentioned in **8.3** adjustment of the current density to the working conditions is frequently needed. In practice, potentiostatic control of the generator by the structure to electrolytic solution potential is best adapted to this situation.

In the case of interruption of service of the plant (plant shutdown), it is necessary before shutdown to flush and rinse the filtering tank.

Then in the case of fresh water either of the following procedures should be carried out:

— maintain cathodic protection in service with current intensity limited to the value required by standing electrolytic solution. The filter must be full of water and opened to the air;

— turn cathodic protection off, empty the filter and keep it open and dry.

Then in the case of sea water maintain cathodic protection in service with current intensity limited to the value required by standing electrolytic solution. The filter must be full of water and opened to the air.

13.6 Maintenance

In addition to 9.1 the following provisions apply:

— visual examination shall be carried out at least every 5 years;

— yearly visual examination of the accessible surfaces is recommended, especially for filtering tanks containing activated charcoal.

Licensed to Pattaraporn Sritrakool. ANSI store order # X_271503. Downloaded 4/23/2012 7:28 AM. Single user license only. Copying and networking prohibited.

14 Internal cathodic protection of wells

14.1 General

The cathodic protection of metallic parts of well casing and tubing involves three different aspects:

a) cathodic protection of internal surface of casing and external surface of tubing, subject of this subclause;

b) cathodic protection of internal surface of tubing (see clause 15);

c) cathodic protection of external surface of casing. This part will be dealt with by the external cathodic protection standard.

The requirements specified in this clause are to ensure that the cathodic corrosion protection with anodes (galvanic anodes, anodes with impressed current) is, and remains, efficient.

The clauses 1 to 9 apply unless otherwise indicated.

14.2 Multiple metals

5.1 applies.

The design of the cathodic protection system shall take the presence of different metals into consideration.

14.3 Electrical continuity

In addition to 5.3 the following provisions apply.

It is necessary to ensure the electric continuity of the casing and to secure electric connection for casings which do not reach the ground surface. It is necessary to ensure the electric continuity of tubing including continuity with the external surfaces of pumps.

14.4 Current distribution

In addition to **5.4** the following provisions apply:

— situations leading to shading effects are frequently encountered in the system well-tubing. The position of the anodes shall be designed in order to secure correct current distribution;

— due to the great length of anodes, it may be necessary to feed current at different levels of the anodes.

14.5 Effects resulting from electrolytic reactions

Cathodic deposits in the case of well casing (see 5.7) is specially significant.

Cathodic deposits have to be kept to a minimum in order not to interfere with hydraulic flow.

14.6 Commissioning

Efficiency shall be confirmed by establishing a potential distribution profile 2 or 3 months after the cathodic protection has been put in operation.

14.7 Maintenance

In addition to 9.1 the following provision shall apply:

The anodic construction shall be checked and brought to good operating conditions after maintenance on the pump. This shall be part of the maintenance instructions.

Licensed to Pattaraporn Sritrakool. ANSI store order # X_271503. Downloaded 4/23/2012 7:28 AM. Single user license only. Copying and networking prohibited.

15 Internal cathodic protection of pipes

15.1 General

This clause deals with internal cathodic protection of pipes. The clauses 1 to 9 apply unless otherwise indicated.

The requirements specified in this clause are to ensure that the cathodic corrosion protection with anodes (galvanic anodes, anodes with impressed current) is, and remains, efficient.

Internal cathodic protection of pipes is considered only for pipes of large diameter.

15.2 Electrolytic solution conductivity

The following point should be noted in conjunction with 5.2:

cathodic protection is not possible when the liquid is a non-conductive liquid and the corrosive phase is only a thin layer of electrolytic solution.

15.3 Electrical continuity

In addition to 5.3 the following provisions shall apply:

the pipe shall have electrical continuity. In particular, different parts of a pipe exhibiting watertight joints shall be connected by metallic connections of low resistance (continuity bonds).

15.4 Current distribution

In addition to 5.4 the following provisions apply:

radial anodes or galvanic anodes have an influence limited to a length equivalent to a few diameters. This length depends on the quality of coating and the conductivity of the electrolytic solution.

When galvanic anodes are installed on the inner surface of the pipe the parts of the surface adjacent to the anode should be insulated by appropriate coating.

It is essential that the part of radial anodes near the surface does not exchange current with the electrolytic solution (e.g. use of titanium without platinum or mixed oxides).

Where pipeline runs exceed 10 m, the use of continuous axial cantilever anodes may be more practical, compared to numerous discrete anodes.

It may be necessary to use copper-cored coated titanium or to have many feed connections regularly spaced along the anode.

15.5 Current density

In pipes internally uncoated or coated with coating of low resistance, variations of the velocity of electrolytic solution may induce significant variations of the current needed for protection. The provisions in 6.9.4 shall be applied.

15.6 Construction design

Automatic venting is generally installed. It is necessary to check that venting devices are present in every upper-part of the pipe.

Isolating joints may be installed if it is necessary to limit the section under cathodic protection.

Licensed to Pattaraporn Sritrakool. ANSI store order # X_271503. Downloaded 4/23/2012 7:28 AM. Single user license only. Copying and networking prohibited.

15.7 Anodes

Anodes shall withstand the mechanical constraints prevailing in the pipes.

15.8 Hydrogen evolution

In addition to 6.9.2 the following provisions apply:

owing to the large ratio of area to yield in the case of pipes, the design shall entail an evaluation of the amount of hydrogen gas liable to be produced by unit length and subsequently of the highest distance between spots designed for accumulation and venting.

15.9 Chlorine evolution

In addition to 6.9.2.2 the following provisions apply:

With electrolytic solutions containing more than 100 mg/l of chlorides, continuous axial anodes should be preferred in order to reduce chlorine evolution by keeping anodic current density to a low level.

15.10 Maintenance

In addition to clause 9 the following provisions apply:

— it is necessary to check the correct operation of the venting devices at least twice a year.

— visual examination of the protected surface shall be done at least every 5 years.

16 Cathodic protection of tubular heat exchangers

16.1 General

This clause deals with the cathodic protection tubular heat exchangers. The clauses 1 to 9 apply unless otherwise indicated.

A tubular heat exchanger mainly comprises inlet and outlet water boxes and a bank of tubes between two plates in which the water circulates.

Cathodic protection can only be applied to the water boxes and tube plates. Sometimes, it may be applied inside the inlet and outlet pipes if their diameters are large enough.

The water tanks, tube plates and water tubes are often made of different metals which, when assembled, create significant galvanic couples (for example, steel of the coated or non-coated water boxes together with copper base alloys of the tube plates; copper base alloys or titanium or stainless steels of the water tubes).

In all assemblies, it is always the less noble metal that corrodes if it is in contact with the circulating water (for example, corrosion of ordinary steel in the assembly, ordinary steel with copper base alloys, or with stainless steel or with titanium). If the steel is well coated, it is the copper base alloy that corrodes in the case of assembly of copper base alloy with titanium.

The natural corrosion of the metals and alloys used in a condenser is a function of the nature of the electrolytic solution (salt and dissolved gas contents), of the conductivity of the electrolytic solution which may vary over time, of the water temperature (higher in the outlet tank than the inlet tank) of the electrolytic solution flow rate, of turbulence, of products transported by the water (sediment, sand, sludge etc.).

Licensed to Pattaraporn Sritrakool. ANSI store order # X_271503. Downloaded 4/23/2012 7:28 AM. Single user license only. Copying and networking prohibited.

16.2 Factors affecting design and implementation

16.2.1 Protection potential in the case of multiple metals

The protection shall be calculated to ensure that the least precious metal of the construction is immune, generally steel. It is essential that overprotection, to which certain metals or coating usually present in heat exchangers are sensitive, is avoided.

16.2.2 Electrolytic solution conductivity

Where the conductivity of the electrolytic solution varies over time, the anode surface shall be designed to ensure good distribution of the protective current whatever the conductivity value.

16.2.3 Current densities

Depending on the condenser service conditions (time of year, electrolytic solution flow rate, conductivity etc.), the large variations in protection current may be conducive to automatic potentiostatic control (see 6.9.4).

16.2.4 Effect resulting from electrolytic reactions

For this type of appliance, the discharge of the gases produced does not present a problem as the conditions of use require rapid circulation of the electrolytic solution.

In case of standstill without emptying, the requirements of 6.9.4 shall be applied.

16.2.5 Lifetime

For the period of use, no maintenance may be carried out on the water tanks and the potential measuring device shall be designed to be operational during this period.

Inspection and maintenance operations should be carried out during programmed shut-downs.

16.3 Design and implementation of internal cathodic protection

16.3.1 Documents

The cathodic protection design shall be based on all the technical documents relating to the appliance and electrolytic solution, taking into account the possible action of biocide products such as copper sulphate or chlorine produced by electrolysis at the pumping station inlet.

16.3.2 Mechanical design of cathodic protection materials

The design of the equipment installed in the tanks shall take into account not just the cathodic protection function, but also mechanical behaviour.

16.3.3 Galvanic anodes

In addition to 6.5.2 the following provisions apply:

in certain cases where the ordinary steel is well coated, cathodic protection of copper base alloys may be achieved by galvanic coupling with pieces of pure iron. Dissolving this iron has the advantage of creating a protective film on the copper base alloy.

16.3.4 Anode construction with impressed current

The anodes are often placed in a very turbulent medium and maintaining their mechanical integrity often means they have to be installed through the wall of the water box.

Licensed to Pattaraporn Sritrakool. ANSI store order # X_271503. Downloaded 4/23/2012 7:28 AM. Single user license only. Copying and networking prohibited.

16.3.5 Placing of measurement electrodes for potential measurement

If the appliance includes titanium, at least one measurement electrode shall be placed close to this metal to prevent its overprotection.

16.3.6 Correction for the “IR” potential drop

The provisions of 7.5.4. apply especially the last 3 paragraphs.

16.4 Commissioning

The provisions of 8.2 regarding potential measurement are amended as follows:

the water tanks do not present an ideal case for cathodic protection current distribution and therefore the disparity in the potential measurements for different parts may exceed 100 mV.

16.5 Operation and maintenance

16.5.1 General

The control system shall include a data exchange system, especially for the remote control of the system and to send an alarm to a centralised alarm system, should the cathodic protection system fail.

16.5.2 Impressed current devices

As indicated in 16.3.6, the “off” measurements shall not be carried out for the routine maintenance as they are not representative.

16.5.3 Manual control

The controls indicated in 9.2.2 shall only be carried out by experienced and capable personnel.

Licensed to Pattaraporn Sritrakool. ANSI store order # X_271503. Downloaded 4/23/2012 7:28 AM. Single user license only. Copying and networking prohibited.

Annex A
(normative)

Test of the electrode potential of galvanic anodes

A.1 Electrode potential of galvanic anodes

With a current output of (50 ± 1) µA/cm^2 in a sodium-chloride solution [c(NaCl) = 0,0010 mol/l] at (60 ± 3) °C, the average of the electrode potential of the anodes shall not be more positive than U_H = - 0,9 V for cathodic protection of steel.

For other materials this potential shall be defined by the manufacturer.

A.2 Test samples

Test samples are pieces of the anodes where the steel core has been removed by drilling.

Before starting the test, the samples shall be degreased by using a solvent (e.g. xylene), cleaned with a plastic brush under running tap water, purged with ethanol, and dried in air at room temperature.

A.3 Test apparatus

The test shall be carried out with an apparatus as shown in Figure A.1.

A.4 Test solution

The test solution is a sodium chloride solution: c(NaCl) = 0,0010 mol/l.

Dissolve 58,4 mg of anhydrous sodium chloride in a volumetric flask filled to the marking

with 1 l of de-ionised water.

A.5 Electrical circuit

The galvanostatical polarisation is effected in accordance with A.4 and A.6.

A.6 Test procedure

Four single measurements with four different samples shall be effected.

After putting the sample into a measuring cell filled with sodium chloride solution, the temperature of the electrolytic solution solution is adjusted to (60 ± 3) °C.

The reference electrode is for example a saturated calomel electrode which is connected to the measuring cell by means of an electrolytic solution bridge and a Haber-Luggin capillary tube.

The capillary tube is moved towards and located as near as possible to the sample surface. The distance between capillary tube and sample surface should be not greater than twice the outside diameter of the capillary tube.

Application of the current is galvanostatically effected by using a galvanostat or a 12 V battery.

After 24 h the potential of electrodes is read from the voltmeter.

The four single values and the mean value - each related to the standard hydrogen electrode - shall be given in the test report.

Licensed to Pattaraporn Sritrakool. ANSI store order # X_271503. Downloaded 4/23/2012 7:28 AM. Single user license only. Copying and networking prohibited.

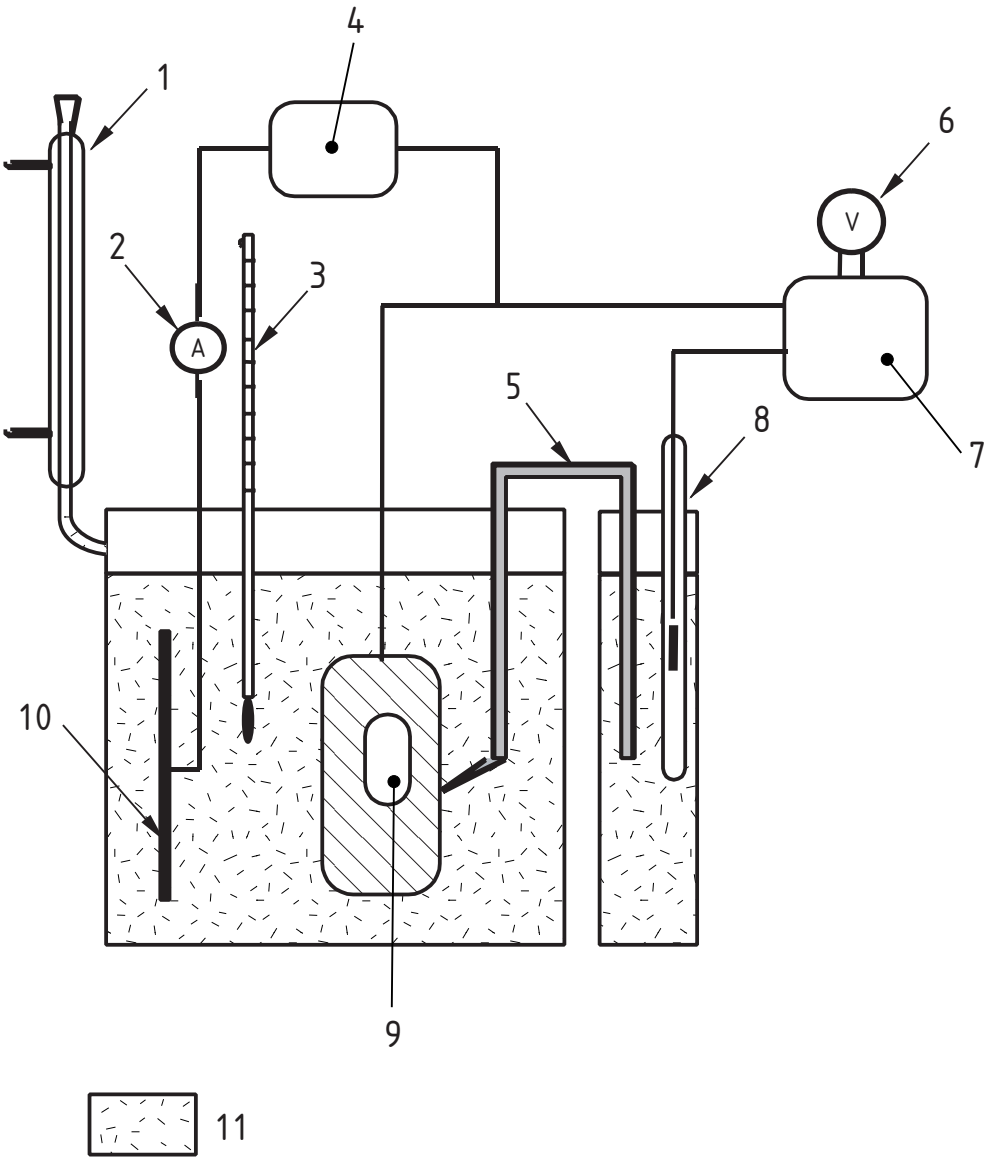

Key

1 Return condenser
2 Ammeter
3 Thermometer
4 I constant
5 Haber-Luggin capillary tube
6 Voltmeter
7 Measuring amplifier
8 Reference electrode
9 Anode submitted to test
10 Galvanic Anode
11 Test Solution

Figure A.1 — Apparatus for testing the electrode potential of galvanic anodes

Licensed to Pattaraporn Sritrakool. ANSI store order # X_271503. Downloaded 4/23/2012 7:28 AM. Single user license only. Copying and networking prohibited.

Annex B
(informative)

Protection potential ranges for low alloy steel compared with Ag/AgCl electrodes in different types of water

Table B.1 — Potential of Ag/AgCl electrodes in different types of water with respect to a standard hydrogen electrode

Medium	**Sea water** $[Cl^-]$ = 18,9 g/L	**Ag/AgCl** $[Cl^-]$ = 2 500 mg/L	**Ag/AgCl** $[Cl^-]$ = 250 mg/L	**Ag/AgCl** $[Cl^-]$ = 50 mg/L
Potential of reference electrode/*V*	0,24	0,29	0,35	0,39

Table B.2 — Protection potential ranges for low alloy steel referred to Ag/AgCl electrodes in different types of water

Medium	**Potential vs. Standard Hydrogen Reference Electrode**	**Potential vs. Reference Electrode Ag/AgCl**			
		Chloride content in different types of water			
		Sea water $[Cl^-]$ = 18,9 g/L	$[Cl^-]$ = 2 500 mg/L	$[Cl^-]$ = 250 mg/L	$[Cl^-]$ = 50 mg/L
Neutral cold water	< 0,55	< - 0,79	< - 0,84	< - 0,90	< - 0,94
Hot water	< - 0,65	< - 0,89	< - 0,94	< - 1,00	< - 1,04
Acid water	< - 0,65	-	< - 0,94	< - 1,00	< - 1,04

Licensed to Pattaraporn Sritrakool. ANSI store order # X_271503. Downloaded 4/23/2012 7:28 AM. Single user license only. Copying and networking prohibited.

Bibliography

BS 7361-1:1991, *Cathodic protection — Part 1: Code of practice for land and marine applications.*

DIN 50927. August 1985. *Planung und Anwendung des elektrochemischen Korrosionsschutzes für die Innenflächen von Apparaten, Behältern und Rohren*.

AFNOR A05 601, *Protection cathodique interne des réservoirs et appareils métalliques*. Février 1991.

Handbuch des kathodischen Korrosionsschutzes. W.v.Baeckmann ,W. Schwenk , Wiley-VCH, D 69469 WEINHEIM,-1999.

VERLAG CHEMIE GMBH. /Bergstrasse D 69469 WEINHEIM.

Handbook of cathodic protection W.v.Baeckmann ,W. Schwenk ,W.Prinz- GULF PUBLISHING COMPANY 77252-2608 ; HOUSTON ; TEXAS, 1997.

EN 50020, *Electrical apparatus for potentially explosive atmospheres – Intrinsic safety 'i'*.

prEN 50145, *Electrical apparatus for potentially explosive gas atmospheres - Classification of hazardous areas*.

NF C 15-100, *Low-voltage electrical installations – Requirements*.

Licensed to Pattaraporn Sritrakool. ANSI store order # X_271503. Downloaded 4/23/2012 7:28 AM. Single user license only. Copying and networking prohibited.

BSI — British Standards Institution

BSI is the independent national body responsible for preparing British Standards. It presents the UK view on standards in Europe and at the international level. It is incorporated by Royal Charter.

Revisions

British Standards are updated by amendment or revision. Users of British Standards should make sure that they possess the latest amendments or editions.

It is the constant aim of BSI to improve the quality of our products and services. We would be grateful if anyone finding an inaccuracy or ambiguity while using this British Standard would inform the Secretary of the technical committee responsible, the identity of which can be found on the inside front cover. Tel: +44 (0)20 8996 9000. Fax: +44 (0)20 8996 7400.

BSI offers members an individual updating service called PLUS which ensures that subscribers automatically receive the latest editions of standards.

Buying standards

Orders for all BSI, international and foreign standards publications should be addressed to Customer Services. Tel: +44 (0)20 8996 9001. Fax: +44 (0)20 8996 7001. Email: orders@bsi-global.com. Standards are also available from the BSI website at http://www.bsi-global.com.

In response to orders for international standards, it is BSI policy to supply the BSI implementation of those that have been published as British Standards, unless otherwise requested.

Information on standards

BSI provides a wide range of information on national, European and international standards through its Library and its Technical Help to Exporters Service. Various BSI electronic information services are also available which give details on all its products and services. Contact the Information Centre. Tel: +44 (0)20 8996 7111. Fax: +44 (0)20 8996 7048. Email: info@bsi-global.com.

Subscribing members of BSI are kept up to date with standards developments and receive substantial discounts on the purchase price of standards. For details of these and other benefits contact Membership Administration. Tel: +44 (0)20 8996 7002. Fax: +44 (0)20 8996 7001. Email: membership@bsi-global.com.

Information regarding online access to British Standards via British Standards Online can be found at http://www.bsi-global.com/bsonline.

Further information about BSI is available on the BSI website at http://www.bsi-global.com.

Copyright

Copyright subsists in all BSI publications. BSI also holds the copyright, in the UK, of the publications of the international standardization bodies. Except as permitted under the Copyright, Designs and Patents Act 1988 no extract may be reproduced, stored in a retrieval system or transmitted in any form or by any means – electronic, photocopying, recording or otherwise – without prior written permission from BSI.

This does not preclude the free use, in the course of implementing the standard, of necessary details such as symbols, and size, type or grade designations. If these details are to be used for any other purpose than implementation then the prior written permission of BSI must be obtained.

Details and advice can be obtained from the Copyright & Licensing Manager. Tel: +44 (0)20 8996 7070. Fax: +44 (0)20 8996 7553. Email: copyright@bsi-global.com.

BSI
389 Chiswick High Road
London
W4 4AL

Licensed to Pattaraporn Sritrakool. ANSI store order # X_271503. Downloaded 4/23/2012 7:28 AM. Single user license only. Copying and networking prohibited.