An Optimization of Maintenance Time Decision for Distribution Feeders Based on Equipment Health Index

GUO Huacheng
Gansu Electric Power Economy Research Institute
Lanzhou City, China

ZHOU Limei
China Electrical Power Research Institute
Beijing ,China

GOU Jun
Lanzhou Power Supply Company
Lanzhou City, China

SONG Junguang
Lanzhou Power Supply Company
Lanzhou City, China

***Abstract*—With the development of device condition monitoring and evaluating, fault diagnosis and forecast, the condition based maintenance (CBM) has been gradually popularized and applied in power electric system. As a kind of new method of CBM, health index based maintenance decision can flexibly arrange time to repair the distribution device so that it could effectively improve the maintenance efficiency and cost effectiveness. Considering those factors such as the level of load, maintenance category and live working , an optimal maintenance time scheduling model for 10kV distribution network based on health index was put forward in the paper. Modified genetic algorithm was used to find the solution of model. At last, the method was applied to a test system. The result showed that device health index based distribution network maintenance decision can not only enhance the operation reliability of the power grid, but also reduce the grid operational expenses, showing remarkable social and economic benefits.**

Keywords—health index; CBM; live working; operation risk; genetic algorithm

I. INTRODUCTION

Power distribution network as the terminal part of power system is directly related to the power supply reliability. Distribution maintenance is an important measure to ensure power grid safe and stable operation. Reasonable maintenance can not only guarantee the power supply reliability, but also improve the economic benefit for power grid enterprises.

Currently, the related researches of maintenance decision model are treat reliability and economy as the starting point. It can be summarized as three categories: Firstly, maintenance target is the reliability. Such as in [2],regarding the budget cost and human resources as constraints to solve the problem with the goal of maximizing the reliability. Secondly, maintenance target is the perspective of the economic indicators. Such as in [3] , regarding the maintenance cost minimum as the objective function; Literature [4] treats the minimum maintenance outage power as the objective function, then uses the genetic algorithm for solving optimization problems. Thirdly, regarding reliability and economy as weight target, using the balance of contradiction of reliability and economy as a maintenance decision. Such as in [5], using the particle swarm optimization to solve problem. But those maintenance models are based on the historical fault statistics data, once the equipment operation changed, the equipment failure rate which calculated by historical failure data is no longer suitable in practice. Therefore, monitor data based maintenance can meet the requirements of power grid enterprise management.

In this paper, maintenance time is regarded as the control variable and then the decision model is proposed with considering the equipment health status in different period and maintenance categories. This model regards the minimum operation risk as the objective function and then finds reasonable maintenance time under the safe operation. At last, through the test system to verify the validity of the model.

II. DISTRIBUTION NETWORK MAINTENANCE TECHNOLOGY CURRENT SITUATION IN CHINA

In 2011, STATE GRID issued a series of standards, including 《Regulation of condition based maintenance test for electric distribution network equipment(Q/GDW 643-2011)》, 《Guidelines of condition based maintenance for electric distribution network equipment (Q/GDW 644-2011)》, 《Guidelines of condition based maintenance evaluation for electric distribution network equipment (Q/GDW 645-2011)》. Based on those standards, the maintenance level is divided into A, B, C, D, E five maintenance levels, the classification and definition as shown in [19].

In order to make up the shortcomings in traditional maintenance method, such as frequently power outages, excessive repair, low working efficiency [20]. In 2010, STATE GRID issued 《Management criterion for working in 10kV overhead line(Q/GDW520-2010)》. According to this standard, live-working is divided into two methods; The first kind is live-working, it can be directly fixed on live line or equipment by insulating gloves and hard pole working. The second kind is synthetic live-line overhaul, it cannot directly operate on the

978-1-5386-5392-0/18/$31.00 ©2018 IEEE

Authorized licensed use limited to: Electricity Generating Authority of Thailand. Downloaded on January 15,2021 at 00:26:12 UTC from IEEE Xplore. Restrictions apply.

equipment needs to isolate maintenance equipment from the distribution circuit through the mobile power supply, such as mobile power car, load transfer, EPS, and parallel bypass operation. The maintenance items of live-working are listed as appendix A in the standard 《Q/GDW520-2010》.

III. HEALTH INDEX CLASSIFY METHOD AND CALCULATION METHOD

A. Health index classify method

In order to compatible with the standard 《Q/GDW 645-2011》, this paper proposes a equipment status evaluation mechanism based on health index score. The equipment status had been divided into five classes. The health index score range is (0,5]. Considering the condition is best when HI=5, in contract the condition is worst when HI=0.

B. Health index calculation method

As we all know, distribution equipment composed of multiple components , and the health status of each component is influenced by many key features. Therefore, the health index is a comprehensive result of key features. With various advanced sensors has been applied to distribution network, equipment health index calculation method based on online monitoring data was put forward by experts and scholars. Such as in [13,14], a distribution transformer health index calculation method was proposed through three aspects of key features, including electrical test parameters, oil experiment indexes and the basic status parameters. At last, using fuzzy AHP method to determine the weight value of each key features. Such as in[15], a new method was proposed for calculating the oil-paper transformers health index. Such as in[16], proposing a multi-attribute decision making method for power transformer with using fuzzy AHP and modified weighted averaging combination.

Based on EA calculation formula, health index variation obeys a exponential decay rule. However, in practice, health index is not only affected by equipment ageing, but also influenced by operating environment and maintaining condition and so on. Therefore, this paper provides a variation formula within equipment whole life cycle. The calculation formula is as follows:

$$HI(t) = HI_0 \cdot \prod_{i=1}^{4} \alpha_i(t) \qquad (1)$$

Where $\alpha_i(t)$ is a modified factor corresponding to equipment insulation status, operating environment, maintenance record and accessories record. Such as in [17], providing a method for calculating modified factors.

IV. CONDITION BASED MAINTENANCE TIME DECISION MODEL

A. Object function

Distribution network daily operation risk exists in the process of operation, at the same time, the operation risk includes maintenance risk (MR) and fault risk (FR). MR refers to the direct loss caused by load loss and maintenance costs. Under the support of the live-working, the load loss caused by the equipment maintenance could been ignored, but the maintenance costs has increased than ever before. FR is the multiply of equipment failure rate product load loss. Under the limited capital constraints, those kinds of risk achieve a balance, namely finds the optimal scheme of power distribution network operation.

Based on what discussed above, the maintenance time decision model is proposed with considering the health status of different period of equipment and the maintenance categories. The model regards the minimum operation risk as the objective function and makes a reasonable maintenance time decision under the safe operation. The objective function is as follows:

$$F(t_j) = \min\left\{\sum_{j=1}^{M}\sum_{i=1}^{N}[P_{ji.m} \cdot \mu_{ji}(t_j) + \lambda_{ji}(t_j) \cdot P_{ji.f}]\right\} \qquad (2)$$

Where: $R_j(t_j)$ is the operation risk of *jth* feeder at t_j; N is the total number of equipment of distribution feeder, including distribution transformers, overhead-lines, cable-lines and breakers; $\mu_i(t)$ is indicative function ; $P_{ji.m}$ is *ith* equipment maintenance cost by using different maintenance items, showed in Tab III; $\lambda_{ji}(t_j)$ is the failure rate of *ith* equipment at t_j; $P_{ji.f}$ is the economic losses since *ith* equipment quit operation.

$$P_{ji.m} = \Delta T_{ji.m} \cdot C_m \qquad (3)$$

Where: $\Delta T_{ji.m}$ is the mean maintenance period of different maintenance items; C_m is the mean maintenance cost of different maintenance items, showed in Tab III.

$$\mu_{ji}(t_j) = \begin{cases} 1; 1 < HI_{ji}(t_j) \le 3 \\ 0; 0 < HI_{ji}(t_j) \le 1 \end{cases} \qquad (4)$$

Where: $HI_{ji}(t_j)$ is *ith* equipment health index score within *jth* feeder; the relationship between health index and maintenance method has showed in Tab. I.

$$\lambda_{ji}(t_j) = K_{ji}(\tau) \cdot e^{-HI_{ji}(t_j) \cdot C_{ji}(\tau)} \qquad (5)$$

Authorized licensed use limited to: Electricity Generating Authority of Thailand. Downloaded on January 15,2021 at 00:26:12 UTC from IEEE Xplore. Restrictions apply.

Where： $K_{ji}(\tau)$ and $C_{ji}(\tau)$ is the ratio factor and curvature factor of failure curve, respectively.

$$P_{ji.f} = \Delta L_{ji.loss} \cdot \Delta T_{ji.f} \cdot C_{pri} \quad (6)$$

Where： $\Delta T_{ji.f}$ is the mean duration from equipment malfunction to finish maintenance; $\Delta L_{ji.loss}$ is the load losses during $\Delta T_{ji.f}$; C_{pri} is the electrical power selling price.

TABLE I. The cost of difference maintenance

HI score	Maintenance method	Maintenance item	C_m
(3,5]	Routine inspection	D-level	—
(2,3]	Minor maintenance	C-level	C_3
		E-level	C_{51}/ C_{52}/ C_{53}
(1,2]	Overhaul	A-level	C_1
		B-level	C_2
		Synthetic live-line overhaul	C_{54}
(0,1]	Replace	—	—

B. The constraints

1） power flow constraint：

$$S_{j.\min} < S_j < S_{j.\max} \quad (7)$$

Where： S_j, $S_{j.\min}$, $S_{j.\max}$ is the actual value, minimum power flow, maximum power flow of *jth* feeder, respectively.

2） voltage constraint：

$$V_{k\min} < V_k(t_j) < V_{k\max} \quad (8)$$

Where： $V_k(t_j)$ 、 $V_{k\max}$ 、 $V_{k\min}$ is the actual voltage, maximum voltage, minimum voltage of feeder, respectively.

3） feeder voltage drop constraint：

$$\left|\Delta V_j(t_j)\right| \le 7\% \cdot V_{j.N} \quad (9)$$

Where： $\Delta V_j(t_j)$ is the voltage drop of *jth* feeder; $V_{j.N}$ is the rated voltage.

4） maintenance resource constraint：

$$\begin{cases} 2 \le r \le R \\ 0 < q_i \le Q_i \end{cases} \quad (10)$$

Where： r is the number of workers; R is the total number of maintenance staff; q_i is the number of spare parts; Q_i is the total number of spare parts.

5） maintenance time constraint：

$$t_j = 1, 2, \cdots, 12 \quad (11)$$

V. SOLVED THE MODEL BY GA

Genetic algorithm is an efficient and robust optimization technique. For a nonlinear model and multi-objective function optimization problem, compared with other algorithms, genetic algorithm can easily get excellent results. The distribution network maintenance plan which based on GA optimization steps including: structure code, generate initial group, structure fitness function and set genetic operation & control parameter, etc.

A. Input data

Input datas. Such as network topology, equipment HI scores, forecasting load datas, cost of maintenances, duration of maintenance items, crossover probability and mutation probability.

B. Chromosome code

In this paper, a 4-bit binary coding is used to structure the chromosome, compared with binary coding, this code method could make chromosome length reduced 2/3. Each 4-bit genes correspond to the maintenance time.

C. Verify constraints

Based on the result of power flow calculation, verify constraints(7)-(12). Through the “Rule of N-1” verification to calculate the load loss during equipment out of service.

D. Fitness function structure

Fitness function as the “evolution" selection strategy, it could judge the "viability" of each chromosome by fitness function value. A chromosome with greater fitness value will gets more opportunity to exist. Otherwise, it will be washed out.

The fitness function is as follows:

$$f_{chs} = 1/[\sum_{j=1}^{M} R_j(t_j) + \sum_{\alpha=1}^{6} \omega_\alpha \cdot T_\alpha] \quad (12)$$

Authorized licensed use limited to: Electricity Generating Authority of Thailand. Downloaded on January 15,2021 at 00:26:12 UTC from IEEE Xplore. Restrictions apply.

Where： ω_α is the penalty factor, T_α is the constraint variable; if the constraint was satisfied, T_α=0, otherwise, T_α=1.

E. Selection

Selection probability based selection operation choose the excellent chromosome to generate the next population. Selection probability calculation as follows:

$$P_{chs} = f_{chs} / \sum_{chs=1}^{A} f_{chs} \qquad (13)$$

Where A is the population of chromosome; P_{chs} is the selection probability; f_{chs} is the fitness value of single chromosome.

F. Crossover and mutation

Crossover probability (P_c) and mutation probability (P_m) directly affect the behavior and performance and convergence of genetic algorithm. Reference [16] provides a kind of method based on the fitness of the individual value of adaptive adjustment which according to each iteration to adapt to the values of P_c and P_m to make adjustments accordingly. When the group into a local optimum, it could be improved by increasing P_c and P_m; on the other hand, when the groups tend to be divergent, it could be improved by decreasing P_c and P_m.

Since 4-bit binary transcoding range is 0~15, therefore, the chromosome genes must be control within 0001~1100, otherwise, chromosome crossover and mutation will fail so that need to restart crossover and mutation.

G. Save excellent chromosome

According to the experience, excellent chromosome number generally accounted for about 13% of the total number of chromosomes.

H. Convergence condition

In this paper, there are less constraints in the maintenance model and those constraints almost are inequality restrictions. Therefore, it is suitable to choose setting the maximum iterations as the convergence condition. According to experience, set the maximum number of iterations is 200, after the maximum number of iterations, stop the iteration and output the optimal chromosome of the operation risk, otherwise, continue the crossover and mutation operation to format a new chromosome generations.

I. Decode and output the optimal schedule

Output the chromosome with highest fitness value, and decode this chromosome to the maintenance time.

VI. TEST SYSTEM

There are two 35kV substations in test system, the capacity of substation A and substation B respectively are 3×40MVA and 2×31.5MVA. Substation A and substation B contact relationship as showed in Fig.1.

In case of feeder 3# and feeder 5#. Feeder 3# is an overhead line, feeder 5# is a cable line. According each equipment health index to determine the maintenance equipment(the bold equipment in Tab II). Load forecasting curves are shown in Fig.2, Fig.3.

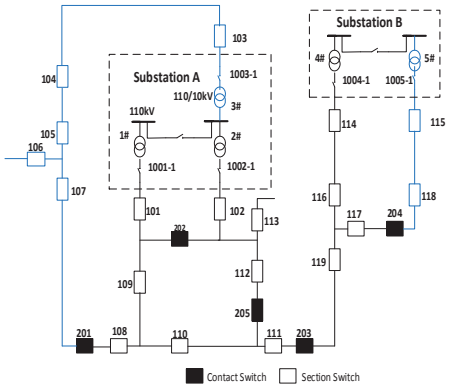

Figure. 1 Connection of 10kV lines between substation A and B

Table. II Health index of No.3 feeders group

Feeder	Equipment	Type	HI score
	104	Breaker	3.621
	103-104	Overhead-line	3.735
	T3	Transformer	**2.802**
	1003-1	Overhead-line	3.415
	104-105	Overhead-line	**2.743**
3#	105	Breaker	3.383
	105-107	Overhead-line	4.841
	107	Breaker	4.375
	106-107	Overhead-line	4.467
	106	Breaker	3.631
	107-201	Overhead-line	**2.317**
	T5	Transformer	3.874
	1005-1	Cable-line	3.996
5#	115-118	Cable-line	**1.998**
	118	Breaker	3.654
	118-204	Cable-line	**2.935**

According 《Q/GDW520-2010》 to calculate the cost of each maintenance item (as shown in Table. III)

TABLE III. Cost and duration of maintenance methods

Maintenance item	$\Delta T_{ij.m}$	$C_{j.m}$	
A-level	2	$C_{j.1}$	1000
B-level	2	$C_{j.2}$	800
C-level	1	$C_{j.3}$	500
D-level	——	——	——

Authorized licensed use limited to: Electricity Generating Authority of Thailand. Downloaded on January 15,2021 at 00:26:12 UTC from IEEE Xplore. Restrictions apply.

E-level(first- category)	1	$C_{j.51}$	2315
E-level(second- category)	1.5	$C_{j.52}$	1543
E-level(third- category)	2.5	$C_{j.53}$	926
Synthetic live-line overhaul	6	$C_{j.54}$	1667

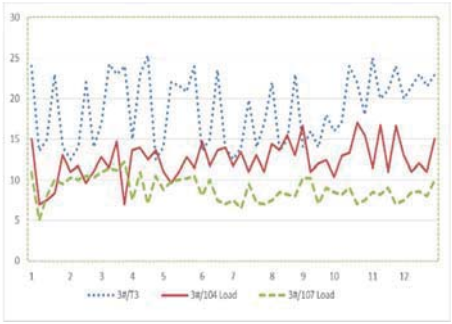

Figure. 2 The forecasting load curve of No.3 feeder



Figure. 3 The forecasting load curve of No.5 feeder

TABLE IV. Mean maintenance duration of equipment

	Distribution transformer	Overhead-line	Cable-line	breaker
ΔT_i	5	2.5	4	1.5

The equipment fault mean repairment time are shown in Tab. IV. Through the "Rule of N-1" verification to calculate the load loss during equipment out of service are shown in Tab V.

TABLE V. Load loss of repaired Equipment

Feeder	Equipment	$\Delta L_{i.loss}$ (MW)
3#	T3	9. 27
	104-105	4. 33
	107-201	5. 94
5#	115-118	2. 72
	118-204	1. 04

Adopt different maintenance projects for 3 # and 5 # feeders, respectively. Project 1: adopt plan maintenance. Based on the planned time, distribution feeder needs to quit operation. Project 2: adopt CBM and use live working. The optimal maintenance scheme are shown in Tab VI.

TABLE VI. Comparison of maintain schemes for feeders

Feeder	Maintenance project	maintenance time (month)	Total risk
3#	PM	4	79.37
	CBM	10	56.23
5#	PM	8	43.61
	CBM	5	29.73

（1）For 3# feeder: maintenance time of CBM is postponed. The reason is that the equipment on the 3# feeder generally have better initial status so that satisfy the current load level at planned time, therefore appropriate to delay the maintenance time.

（2） For 5# feeder: maintenance time of CBM is advanced. The reason is that the "115-118" cable-line already at "major defect" status so that it can not safely running to the planned time. Therefore, in order to reduce the loss appropriate to advance the maintenance time.

（3）Compared with PM, CBM reduces the risk are 29.15% and 31.38%, respectively. 1） for 3# feeder, postpone the maintenance time could save the maintenance resources and then reduce the total risk; 2） for 5# feeder, advance the maintenance time can decrease severe loss load risk and then reduce the total risk from the risk of failure; 3）Although live working is used to reduce power outage loss, but also increases the maintenance cost accordingly.

In this paper, genetic algorithm population size $N=100$ .Setting crossover probability: P_{c1} =0.9, P_{c2} =0.7. Setting crossover probability: P_{m1} = 0.1, P_{m2} =0.001. The fitness curves of 3# and 5# feeder are shown in Fig 4.

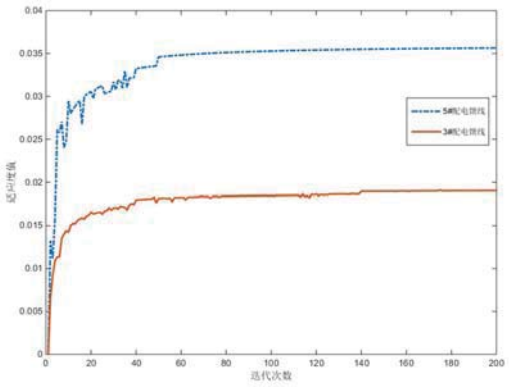

Figure. 4 The fitness curve of No.3 feeder and No.5 feeder

VII. CONCLUSION

(1) As a new method of CBM, the optimal maintenance time

Authorized licensed use limited to: Electricity Generating Authority of Thailand. Downloaded on January 15,2021 at 00:26:12 UTC from IEEE Xplore. Restrictions apply.

decision model for 10kV distribution network based on health index was put forward in this paper, it can flexibly arranges maintenance time to improve the maintenance efficiency and cost effectiveness.

(2) Health index based CBM not only can solve the deflection problem under small time scale reliability prediction evaluation, but also guide the maintenance work which associated with feeder or substation. Therefore, the subsequent need to carry out the health index of distribution network based on feeder or network maintenance optimization strategy research.

ACKNOWLEDGMENT

This paper was supported by SGCC (State Grid Corporation of China) Thousand Talents program special support project (EPRIPDKJ (2014)2863).

REFERENCES

[1] Huang Jianqian. The Study of Distribution Network Maintenance Optimization Based on Risk Assessment[D].ZHEJIANG UNIVERSITY. 2016.

[2] Huang Jiajian. “Reliability-Centered Maintenance Selection Model for Distribution Network Based on Condition Monitoring,” Power System Technology. 2015,39(1):164-168.

[3] HUANG Xianchao. “Distribution Network Maintenance Optimization Model.” Automation of Electric Power System. 2007,31(1):33-38.

[4] LIU Yongmei. “Optimization Model for Distribution Equipment Maintenance Scheduling Based on Network Topology and Genetic Algorithm,” Power System Technology. 2007,31(21):11-15.

[5] LI Ran. “Optimization Model for Distribution Maintenance Scheduling Based on Risk Evaluation,” Electric Power Automation Equipment. 2013,33（11）：1-8.

[6] NI Zhijian. “The Comparison of Live Working,” Northeast Electric Power Technology. 2016,37(9):53-55.

[7] HUO Minglei. “Research on Condition Maintenance and Decision Optimization of Power Distribution Equipment,” master. Univ. Beijing , North China Electric Power University. 2014.

[8] LV Dequan. “Optimization of Maintenance for the Distribution Network,” master. Univ. Beijing , North China Electric Power University. 2009.

[9] HuANG Xianchao. “Distribution Maintenance Scheduling Using An Intelligent Optimal Approach Mixed With Immune Algorithm and Tabu Search,” Proceedings of the CSEE. 2004,24(11):96-100.

[10] ZHAO Hongshan. “Distribution system reliability analysis considering the elements failure rate changes,” Power System Protection and control. 2015,43(11):56-62.

[11] WANG Yi. “Research on Equipment Reliability Based on Life Cycle Statuss,” Power System Technology. 2011,35(8):207-211.

[12] ZHOU Limei,MA Zhao,SHENG Wanxing. “Recent Development of Health Index Theory for Modern Distribution Network,” Distribution & Utilization.2016.01:03-10.

[13] ZHANG Nan, YUAN Haiwen, MA Zhao. “A Health Index Evaluation Method for Distribution Transformers Based on Hierarchical Structure,” Distribution & Utilization, 2016, 33(1).

[14] Weijie Zuo, Haiwen Yuan, Yuwei Shang, Yingyi Liu, and Tao Chen, “Calculation of a Health Index of Oil-Paper Transformers Insulation with Binary Logistic Regression,” Mathematical Problems in Engineering, vol. 2016.

[15] Lingjie Sun, Yingyi Liu, Boyang Zhang, et al. "An Integrated Decision-Making Model for Transformer Condition Assessment Using Game Theory and Modified Evidence Combination Extended by D Numbers", Energies, 2016, 9(9), 697.

[16] Lingjie Sun, Zhao Ma, Yuwei Shang, et al. “Research on multi-attribute decisionmaking in condition evaluation for power transformer using fuzzy AHP and modified weighted averaging combination", IET Generation, Transmission & Distribution, 2016.

[17] LI Xigui. “Remnant Life Estimation of Power Transformer Based on Health Index,” High Voltage Apparatus. 2012,48(12):80-85.

[18] ZHANG Shuang . “The model method for calculating Health Index based on Remnant Life theory,” Utilize Power. 2016.01:08-12.

[19] CHEN Haixing. “Research on Distribution Network Condition Based Maintenance,” Technological Development of Enterprise. 2016,35(14):86-87.

[20] MA Yiping. “The Analysis of Live Working,” Technology of Electric. 2009,9:149-152.

[21] STATE GRID Regulation of condition based maintenance test for electric distribution network equipment. 2011.

[22] STATE GRID Guidelines of condition based maintenance for electric distribution network equipment. 2011.

[23] STATE GRID Management criterion for working in 10kV overhead line. 2010.

[24] STATE GRID Guidelines of condition based maintenance evaluation for electric distribution network equipment. 2011.

[25] STATE GRID Management criterion for working in 10kV overhead line. 2010.

Authorized licensed use limited to: Electricity Generating Authority of Thailand. Downloaded on January 15,2021 at 00:26:12 UTC from IEEE Xplore. Restrictions apply.