Copyright 2014 National Fire Protection Association (NFPA). Licensed, by agreement, for individual use and download on October 4, 2014 to LEADER and READER for designated user PATTARAPORN SRITRAKOOL. No other reproduction or transmission in any form permitted without written permission of NFPA. For inquires or to report unauthorized use, contact licensing@nfpa.org.

NFPA® 13

Standard for the Installation of Sprinkler Systems

2013 Edition



NFPA, 1 Batterymarch Park, Quincy, MA 02169-7471
An International Codes and Standards Organization

Become a Member
Subscribe to the NATIONAL FIRE CODES® SUBSCRIPTION SERVICE
Register for Seminars, Webinars, and Online Courses
Visit the NFPA Catalog

Copyright 2014 National Fire Protection Association (NFPA). Licensed, by agreement, for individual use and download on October 4, 2014 to LEADER and READER for designated user PATTARAPORN SRITRAKOOL. No other reproduction or transmission in any form permitted without written permission of NFPA. For inquires or to report unauthorized use, contact licensing@nfpa.org.

IMPORTANT NOTICES AND DISCLAIMERS CONCERNING NFPA® DOCUMENTS
NOTICE AND DISCLAIMER OF LIABILITY CONCERNING THE USE OF NFPA DOCUMENTS

NFPA® codes, standards, recommended practices, and guides ("NFPA Documents"), of which the document contained herein is one, are developed through a consensus standards development process approved by the American National Standards Institute. This process brings together volunteers representing varied viewpoints and interests to achieve consensus on fire and other safety issues. While the NFPA administers the process and establishes rules to promote fairness in the development of consensus, it does not independently test, evaluate, or verify the accuracy of any information or the soundness of any judgments contained in NFPA Documents.

The NFPA disclaims liability for any personal injury, property or other damages of any nature whatsoever, whether special, indirect, consequential or compensatory, directly or indirectly resulting from the publication, use of, or reliance on NFPA Documents. The NFPA also makes no guaranty or warranty as to the accuracy or completeness of any information published herein.

In issuing and making NFPA Documents available, the NFPA is not undertaking to render professional or other services for or on behalf of any person or entity. Nor is the NFPA undertaking to perform any duty owed by any person or entity to someone else. Anyone using this document should rely on his or her own independent judgment or, as appropriate, seek the advice of a competent professional in determining the exercise of reasonable care in any given circumstances.

The NFPA has no power, nor does it undertake, to police or enforce compliance with the contents of NFPA Documents. Nor does the NFPA list, certify, test, or inspect products, designs, or installations for compliance with this document. Any certification or other statement of compliance with the requirements of this document shall not be attributable to the NFPA and is solely the responsibility of the certifier or maker of the statement.

ISBN: 978-145590406-8 (Print)
ISBN: 978-145590455-6 (PDF) 8/12

Copyright 2014 National Fire Protection Association (NFPA). Licensed, by agreement, for individual use and download on October 4, 2014 to LEADER and READER for designated user PATTARAPORN SRITRAKOOL. No other reproduction or transmission in any form permitted without written permission of NFPA. For inquires or to report unauthorized use, contact licensing@nfpa.org.

IMPORTANT NOTICES AND DISCLAIMERS CONCERNING NFPA DOCUMENTS

ADDITIONAL NOTICES AND DISCLAIMERS

Updating of NFPA Documents

Users of NFPA codes, standards, recommended practices, and guides ("NFPA Documents") should be aware that these documents may be superseded at any time by the issuance of new editions or may be amended from time to time through the issuance of Tentative Interim Amendments. An official NFPA Document at any point in time consists of the current edition of the document together with any Tentative Interim Amendments and any Errata then in effect. In order to determine whether a given document is the current edition and whether it has been amended through the issuance of Tentative Interim Amendments or corrected through the issuance of Errata, consult appropriate NFPA publications such as the National Fire Codes® Subscription Service, visit the NFPA website at www.nfpa.org, or contact the NFPA at the address listed below.

Interpretations of NFPA Documents

A statement, written or oral, that is not processed in accordance with Section 6 of the Regulations Governing Committee Projects shall not be considered the official position of NFPA or any of its Committees and shall not be considered to be, nor be relied upon as, a Formal Interpretation.

Patents

The NFPA does not take any position with respect to the validity of any patent rights referenced in, related to, or asserted in connection with an NFPA Document. The users of NFPA Documents bear the sole responsibility for determining the validity of any such patent rights, as well as the risk of infringement of such rights, and the NFPA disclaims liability for the infringement of any patent resulting from the use of or reliance on NFPA Documents.

NFPA adheres to the policy of the American National Standards Institute (ANSI) regarding the inclusion of patents in American National Standards ("the ANSI Patent Policy"), and hereby gives the following notice pursuant to that policy:

NOTICE: The user's attention is called to the possibility that compliance with an NFPA Document may require use of an invention covered by patent rights. NFPA takes no position as to the validity of any such patent rights or as to whether such patent rights constitute or include essential patent claims under the ANSI Patent Policy. If, in connection with the ANSI Patent Policy, a patent holder has filed a statement of willingness to grant licenses under these rights on reasonable and nondiscriminatory terms and conditions to applicants desiring to obtain such a license, copies of such filed statements can be obtained, on request, from NFPA. For further information, contact the NFPA at the address listed below.

Law and Regulations

Users of NFPA Documents should consult applicable federal, state, and local laws and regulations. NFPA does not, by the publication of its codes, standards, recommended practices, and guides, intend to urge action that is not in compliance with applicable laws, and these documents may not be construed as doing so.

Copyrights

NFPA Documents are copyrighted by the NFPA. They are made available for a wide variety of both public and private uses. These include both use, by reference, in laws and regulations, and use in private self-regulation, standardization, and the promotion of safe practices and methods. By making these documents available for use and adoption by public authorities and private users, the NFPA does not waive any rights in copyright to these documents.

Use of NFPA Documents for regulatory purposes should be accomplished through adoption by reference. The term "adoption by reference" means the citing of title, edition, and publishing information only. Any deletions, additions, and changes desired by the adopting authority should be noted separately in the adopting instrument. In order to assist NFPA in following the uses made of its documents, adopting authorities are requested to notify the NFPA (Attention: Secretary, Standards Council) in writing of such use. For technical assistance and questions concerning adoption of NFPA Documents, contact NFPA at the address below.

For Further Information

All questions or other communications relating to NFPA Documents and all requests for information on NFPA procedures governing its codes and standards development process, including information on the procedures for requesting Formal Interpretations, for proposing Tentative Interim Amendments, and for proposing revisions to NFPA documents during regular revision cycles, should be sent to NFPA headquarters, addressed to the attention of the Secretary, Standards Council, NFPA, 1 Batterymarch Park, P.O. Box 9101, Quincy, MA 02169-7471; email: stds_admin@nfpa.org

For more information about NFPA, visit the NFPA website at www.nfpa.org.

Copyright 2014 National Fire Protection Association (NFPA). Licensed, by agreement, for individual use and download on October 4, 2014 to LEADER and READER for designated user PATTARAPORN SRITRAKOOL. No other reproduction or transmission in any form permitted without written permission of NFPA. For inquires or to report unauthorized use, contact licensing@nfpa.org.

Copyright © 2012 National Fire Protection Association®. All Rights Reserved.

NFPA® 13

Standard for the

Installation of Sprinkler Systems

2013 Edition

This edition of NFPA 13, *Standard for the Installation of Sprinkler Systems*, was prepared by the Technical Committees on Private Water Supply Piping Systems, Residential Sprinkler Systems, Sprinkler System Discharge Criteria, and Sprinkler System Installation Criteria, released by the Technical Correlating Committee on Automatic Sprinkler Systems, and acted on by NFPA at its June Association Technical Meeting held June 11–14, 2012, in Las Vegas, NV. It was issued by the Standards Council on August 9, 2012, with an effective date of August 29, 2012, and supersedes all previous editions.

Tentative interim amendments (TIAs) to Chapter 6, Section 7.6, and Paragraphs 7.8.3.4, 23.1.3(42), and 23.4.2.1.3 were issued on August 9, 2012. For further information on tentative interim amendments, see Section 5 of the NFPA Regulations Governing Committee Projects available at http://www.nfpa.org/assets/files/PDF/CodesStandards/TIAErrataFI/TIARegs.pdf

This edition of NFPA 13 was approved as an American National Standard on August 29, 2012.

Origin and Development of NFPA 13

NFPA 13 represents the first standard published under the auspices of the NFPA Committee on Automatic Sprinklers. Originally titled *Rules and Regulations of the National Board of Fire Underwriters for Sprinkler Equipments, Automatic and Open Systems*, the standard has been continuously updated to keep in step with change.

Full information about the NFPA actions on various changes will be found in the NFPA Proceedings. The dates of successive editions are as follows: 1896, 1899, 1902, 1905, 1907, 1908, 1912, 1913, 1915, 1916, 1917, 1919, 1920, 1921, 1922, 1923, 1924, 1925, 1926, 1927, 1928, 1929. In 1930, a separate standard was published on Class B systems. This was integrated into the 1931 edition. Further revisions were adopted in 1934, 1935, and 1936. A two-step revision was presented in the form of a progress report in 1939 and finally adopted in 1940. Further amendments were made in 1947, 1950, 1953, 1956, 1958, 1960, 1961, 1963, 1964, 1965, 1966, 1968, 1969, 1971, 1972, 1973, 1974, 1975, 1976, 1978, 1980, 1982, 1984, 1986, and 1989.

The 1991 edition incorporated an entire rewrite of the standard to make the overall format user friendly. Substantive changes were made to numerous terms, definitions, and descriptions, with additional refinements made in 1994.

The centennial (1996) edition included a significant rework of the requirements pertaining to the application, placement, location, spacing, and use of various types of sprinklers. Other changes provided information on extended coverage sprinklers and recognized the benefits of fast-response sprinkler technology.

The 1999 edition encompassed a major reorganization of NFPA's Sprinkler Project that included the establishment of a Technical Correlating Committee on Automatic Sprinkler Systems and four new sprinkler systems technical committees, the consolidation of NFPA's sprinkler system design and installation requirements, and the implementation of numerous technical changes.

The scope of NFPA 13 was expanded to address all sprinkler system applications. The 1999 edition contained information on the installation of underground pipe from NFPA 24 and sprinkler system discharge criteria for on-floor and rack storage of Class I, II, III, IV, and plastic commodities, rubber tires, baled cotton, and roll paper that were previously located in NFPA 231, 231C, 231D, 231E, and 231F. Additionally, sprinkler system information for specialized hazards from over 40 NFPA documents was either brought into NFPA 13 using NFPA's extract policy or specifically referenced. A new chapter was also added to address the structural aspects of exposed and buried system piping. A table of cross-references to previous editions and material that was located in other NFPA documents was included at the end of the 1999 edition.

NFPA and National Fire Protection Association are registered trademarks of the National Fire Protection Association, Quincy, Massachusetts 02169.

Copyright 2014 National Fire Protection Association (NFPA). Licensed, by agreement, for individual use and download on October 4, 2014 to LEADER and READER for designated user PATTARAPORN SRITRAKOOL. No other reproduction or transmission in any form permitted without written permission of NFPA. For inquires or to report unauthorized use, contact licensing@nfpa.org.

More specific changes included a new sprinkler identification marking system and the designation of sprinkler sizes by nominal K-factors. New criteria for the use of steel pipe in underground applications was added, as well as a new provision to guard against microbiologically influenced corrosion. Obstruction rules for specific sprinkler types and rules for locating sprinklers in concealed spaces were revised. New limitations were placed on the sprinkler sizes in storage applications, and criteria for the K-25 sprinkler was added. Additionally, the requirements for protecting sprinklers against seismic events also underwent significant revision.

The 2002 edition of NFPA 13 underwent style formatting and technical revisions. The style formatting was completed to comply with the *Manual of Style for NFPA Technical Committee Documents* and to reorganize many of the requirements in NFPA 13 into unique chapters. Editorially, NFPA 13 eliminated all of the exceptions and reworded them as requirements where applicable, moved the mandatory references to Chapter 2, and relocated all of the definitions to Chapter 3. In reorganizing NFPA 13, several new chapters were created to consolidate requirements including the following: Chapter 10 contained all of the applicable requirements for underground piping including materials, installation, and acceptance testing; Chapter 11 contained design approaches including pipe schedule, density/area method, room design method, special design areas, residential sprinklers, exposure protection, and water curtains; Chapter 12 contained the design approaches for the protection of storage, including idle pallets, miscellaneous storage, storage less than 12 ft, palletized, solid pile, bin box, and shelf storage, rack storage less than 25 ft, rack storage greater than 25 ft, rubber tire, baled cotton, rolled paper, and special storage designs; and Chapter 13 contained all of the design and installation requirements from all of the various documents that have been extracted into NFPA 13.

The 2002 edition made specific technical changes to address several key issues. Three major areas of irregular ceiling were addressed, including skylights, stepped ceilings, and ceiling pockets. The design requirements for ESFR sprinklers were expanded to allow the user to choose the storage height and then the building height for any allowable arrangement. Design requirements for the protection of storage on solid shelves were added. Requirements for the installation of residential sprinklers were added that parallel the requirements for other types of sprinklers.

For the 2007 edition, definitions were reorganized to locate all of the storage definitions in one area, and several new definitions addressing private water supply terms were added. The definitions and requirements of Ordinary Hazard Group 1 and 2 Occupancies were clarified where storage is present. The requirements for trapeze hangers were clarified and made consistent for all components, and the seismic bracing criteria were updated to ensure that NFPA 13 contains all of the appropriate requirements for installation and design of seismic bracing of fire sprinkler systems. The requirements for storage were further reorganized and divided into separate chapters addressing general requirements for storage; miscellaneous storage; protection of Class I to Class IV commodities that are stored palletized, solid piled, bin boxes, or self storage; protection of plastic and rubber commodities that are stored palletized, solid piled, bin boxes, or shelf storage; protection of Class I through Class IV commodities that are stored on racks; protection of plastic and rubber commodities that are stored on racks; protection of rubber tire storage; protection of roll paper; and special designs of storage protection.

For the 2010 edition many of the major changes related to the requirements for storage protection. First was the combination of large drop sprinkler and the specific application control mode sprinkler requirements and the revision of the terminology to identify them as Control Mode Specific Application sprinklers (CMSA). Next, new criteria for use of smoke vents were added to Chapter 12. The density/area curves in the storage chapters were reduced to a maximum 3000 ft^2 operating area; this was a significant reduction of some curves that had extended up to 6000 ft^2. Changes to rack storage in the 2010 edition included a new method to calculate the rack shelf area. Finally, the provisions for back to back shelf storage were added to the storage chapters.

Criteria for the protection of three new special storage arrangements were added to Chapter 20. These included protection of carton records storage with catwalk access; compact shelving of commodities consisting of paper files, magazines, books, and similar documents in folders and miscellaneous supplies with no more than 5 percent plastics up to 8 ft high; and protection of high bay record storage.

In Chapter 9, a number of changes occurred regarding sway bracing of sprinkler systems including the introduction of new zone of influence tables for Schedule 5 steel pipe, CPVC, and Type M copper tube. Also the means for calculating the loads in the zone of influence were modified to correlate with SEI/ASCE-7 and a new Annex E was added that described this calculation.

Other areas of change included requirements for listed expansion chambers; clarification of ceiling pocket rules; and clarification of the formulas used in calculating large antifreeze systems.

The 2013 edition of NFPA 13 included changes to many technical requirements as well as the reorganization of multiple chapters. One significant change that was made to the administrative chapter of NFPA 13 was to clarify that watermist systems were not covered within NFPA 13 and that NFPA 750 should be used when looking for guidance on the design and installation of those systems. A series of new requirements address the need for a compatibility review where nonmetallic piping and fittings are installed in systems also using petroleum-based products such as cutting oils and corrosion inhibitors. Several modifications were made to the standard pertaining to freeze protection. The use of antifreeze in new NFPA 13 sprinkler systems is now prohibited unless the solution use has been listed and the listing indicates illustrates the inability for the solution to ignite. Other freeze protection modifications to the standard include clarification on the use of heat tracing, required barrel length for dry sprinklers, and the allowance for engineering analyses to be submitted to support an alternate freeze protection scheme. New sprinkler omission requirements were added for elevator machine rooms and other elevator associated spaces where certain criteria is met. Chapter 9 includes updated information on shared support structures as well as a revised seismic bracing calculation form. Chapters 16 and 17 were reorganized to make the chapters easier to follow to create more consistency between the various storage chapters. A new chapter on alternative approaches for storage applications was added to provide guidance on performance-based approaches dealing with storage arrangements.

Prior editions of this document have been translated into languages other than English, including French and Spanish.

Copyright 2014 National Fire Protection Association (NFPA). Licensed, by agreement, for individual use and download on October 4, 2014 to LEADER and READER for designated user PATTARAPORN SRITRAKOOL. No other reproduction or transmission in any form permitted without written permission of NFPA. For inquires or to report unauthorized use, contact licensing@nfpa.org.

Technical Correlating Committee on Automatic Sprinkler Systems (AUT-AAC)

Edward K. Budnick, *Chair*
Hughes Associates, Inc., MD [SE]

Jose R. Baz, JRB Associates Group Inc., FL [M]
Rep. NFPA Latin American Section
Kerry M. Bell, Underwriters Laboratories Inc., IL [RT]
Russell P. Fleming, National Fire Sprinkler Association, Inc., NY [M]
Scott T. Franson, The Viking Corporation, MI [M]
Michael J. Friedman, Friedman Consulting, Inc., MD [SE]
Raymond A. Grill, Arup Fire, DC [SE]
Luke Hilton, Liberty Mutual Property, NC [I]
Alex Hoffman, Viking Fire Protection Inc., Canada [IM]
Rep. Canadian Automatic Sprinkler Association
Roland J. Huggins, American Fire Sprinkler Association, Inc., TX [IM]
Sultan M. Javeri, SC Engineering, France [IM]
Charles W. Ketner, National Automatic Sprinkler Fitters LU 669, MD [L]
Rep. United Association of Journeymen and Apprentices of the Plumbing and Pipe Fitting Industry
Andrew Kim, National Research Council of Canada, Canada [RT]
Russell B. Leavitt, Telgian Corporation, AZ [U]
Rep. Trinity Health
John G. O'Neill, The Protection Engineering Group, PC, VA [SE]
Garner A. Palenske, Aon/Schirmer Engineering Corporation, CA [I]
J. William Sheppard, Sheppard & Associates, LLC, MI [SE]
Robert D. Spaulding, FM Global, MA [I]
Douglas Paul Stultz, U.S. Department of the Navy, VA [E]
Lynn K. Underwood, Axis U.S. Property, IL [I]

Alternates

Donald D. Becker, RJC & Associates, Inc., MO [IM]
(Alt. to R. J. Huggins)
Thomas C. Brown, The RJA Group, Inc., MD [SE]
(Alt. to R. A. Grill)
David B. Fuller, FM Global, MA [I]
(Alt. to R. D. Spaulding)
Kenneth E. Isman, National Fire Sprinkler Association, Inc., NY [M]
(Alt. to R. P. Fleming)
George E. Laverick, Underwriters Laboratories Inc., IL [RT]
(Alt. to K. M. Bell)
Scott T. Martorano, The Viking Corporation, MI [M]
(Alt. to S. T. Franson)
Donato A. Pirro, Electro Sistemas De Panama, S.A., Panama [M]
(Alt. to J. R. Baz)
J. Michael Thompson, The Protection Engineering Group, PC, VA [SE]
(Alt. to J. G. O'Neill)

Nonvoting

James B. Biggins, Global Risk Consultants Corporation, IL [SE]
Rep. TC on Hanging and Bracing of Water-Based Systems
Robert M. Gagnon, Gagnon Engineering, MD [SE]
Rep. TC on Foam-Water Sprinklers
William E. Koffel, Koffel Associates, Inc., MD [SE]
Rep. Safety to Life Correlating Committee
Kenneth W. Linder, Swiss Re, CT [I]
Rep. TC on Sprinkler System Discharge Criteria
Joe W. Noble, Noble Consulting Services, LLC, NV [E]
Rep. TC on Sprinkler System Installation Criteria
Maurice M. Pilette, Mechanical Designs Ltd., MA [SE]
Rep. TC on Residential Sprinkler Systems
Chester W. Schirmer, Aon/Schirmer Engineering Corporation, NC [I]
(Member Emeritus)
Kenneth W. Wagoner, Parsley Consulting Engineers, CA [SE]
Rep. TC on Private Water Supply Piping Systems
John J. Walsh, UA Joint Apprenticeship Committee, MD [SE]
Rep. United Association of Journeymen and Apprentices of the Plumbing and Pipe Fitting Industry
(Member Emeritus)

Matthew J. Klaus, NFPA Staff Liaison

This list represents the membership at the time the Committee was balloted on the final text of this edition. Since that time, changes in the membership may have occurred. A key to classifications is found at the back of the document.

NOTE: Membership on a committee shall not in and of itself constitute an endorsement of the Association or any document developed by the committee on which the member serves.

Committee Scope: This Committee shall have overall responsibility for documents that pertain to the criteria for the design and installation of automatic, open and foam-water sprinkler systems including the character and adequacy of water supplies, and the selection of sprinklers, piping, valves, and all materials and accessories. This Committee does not cover the installation of tanks and towers, nor the installation, maintenance, and use of central station, proprietary, auxiliary, and local signaling systems for watchmen, fire alarm, supervisory service, nor the design of fire department hose connections.

Copyright 2014 National Fire Protection Association (NFPA). Licensed, by agreement, for individual use and download on October 4, 2014 to LEADER and READER for designated user PATTARAPORN SRITRAKOOL. No other reproduction or transmission in any form permitted without written permission of NFPA. For inquires or to report unauthorized use, contact licensing@nfpa.org.

Technical Committee on Hanging and Bracing of Water-Based Fire Protection Systems (AUT-HBS)

James B. Biggins, *Chair*
Global Risk Consultants Corporation, IL [SE]

Richard W. Bonds, Ductile Iron Pipe Research Association, AL [M]
Samuel S. Dannaway, S. S. Dannaway Associates, Inc., HI [SE]
Christopher I. Deneff, FM Global, RI [I]
John Deutsch, City of Brea Fire Department, CA [E]
Daniel C. Duggan, Fire Sprinkler Design, MO [M]
Thomas J. Forsythe, Hughes Associates, Inc., CA [SE]
Jeffrey E. Harper, The RJA Group, Inc., IL [SE]
David J. Jeltes, ERICO International Corporation, OH [M]
Kraig Kirschner, AFCON, CA [M]
Alan R. Laguna, Merit Sprinkler Company, Inc., LA [IM]
George E. Laverick, Underwriters Laboratories Inc., IL [RT]
Philip D. LeGrone, Risk Management Solutions, Inc., TN [SE]
Leslie "Chip" L. Lindley, II, Lindley Fire Protection Company Inc., CA [IM]
Norman J. MacDonald, III, FlexHead Industries, Inc., MA [M]
Wayne M. Martin, Wayne Martin & Associates Inc., CA [SE]
David S. Mowrer, Babcock & Wilcox Technical Services, LLC, TN [U]
Randy R. Nelson, VFS Fire and Security Services, CA [IM]
Rep. American Fire Sprinkler Association
Marco R. Nieraeth, XL Global Asset Protection Services, CA [I]
Janak B. Patel, Savannah River Nuclear Solutions, GA [U]
Michael A. Rothmier, UA Joint Apprenticeship Committee, CO [L]
Rep. United Assn. of Journeymen & Apprentices of the Plumbing & Pipe Fitting Industry
Peter T. Schwab, Wayne Automatic Fire Sprinklers, Inc., FL [IM]
Zeljko Sucevic, Vipond Fire Protection, Canada [IM]
Rep. Canadian Automatic Sprinkler Association
James Tauby, Mason Industries, Inc., NY [M]
Jack W. Thacker, Allan Automatic Sprinkler Corp. of So. California, CA [IM]
Rep. National Fire Sprinkler Association
Glenn E. Thompson, Liberty Mutual Property, CA [I]
Rep. Property Casualty Insurers Association of America
Victoria B. Valentine, National Fire Sprinkler Association, Inc., NY [M]
Rep. National Fire Sprinkler Association
George Von Gnatensky, Tolco, CA [M]
Rep. National Fire Sprinkler Association
Thomas G. Wellen, American Fire Sprinkler Association, Inc., TX [IM]

Alternates

Robert E. Bachman, Robert E. Bachman, Consulting Structural Engineer, CA [M]
(Alt. to N. J. MacDonald, III)
Charles W. Bamford, Bamford Inc., WA [IM]
(Alt. to R. R. Nelson)
Sheldon Dacus, Security Fire Protection Company, TN [M]
(Alt. to V. B. Valentine)
Todd A. Dillon, XL Global Asset Protection Services, OH [I]
(Alt. to M. R. Nieraeth)
Matthew W. Donahue, The RJA Group, Inc., CA [SE]
(Alt. to J. E. Harper)
Donald L. Dutra, Liberty Mutual Insurance, CA [I]
(Alt. to G. E. Thompson)
Charles W. Ketner, National Automatic Sprinkler Fitters LU 669, MD [L]
(Alt. to M. A. Rothmier)
Michael J. Madden, Hughes Associates, Inc., CA [SE]
(Alt. to T. J. Forsythe)
Emil W. Misichko, Underwriters Laboratories Inc., IL [RT]
(Alt. to G. E. Laverick)
J. Scott Mitchell, B & W Technical Services Pantex, TX [U]
(Alt. to D. S. Mowrer)
Joseph Normandeau, Tyco/SimplexGrinnell, CA [M]
(Alt. to G. Von Gnatensky)
Kenneth W. Wagoner, Parsley Consulting Engineers, CA [IM]
(Alt. to T. G. Wellen)
Ronald N. Webb, S.A. Comunale Company, Inc., OH [IM]
(Alt. to J. W. Thacker)

Matthew J. Klaus, NFPA Staff Liaison

This list represents the membership at the time the Committee was balloted on the final text of this edition. Since that time, changes in the membership may have occurred. A key to classifications is found at the back of the document.

NOTE: Membership on a committee shall not in and of itself constitute an endorsement of the Association or any document developed by the committee on which the member serves.

Committee Scope: This Committee shall have the primary responsibility for those portions of NFPA 13 that pertain to the criteria for the use and installation of components and devices used for the support of water-based fire protection system piping including protection against seismic events.

Copyright 2014 National Fire Protection Association (NFPA). Licensed, by agreement, for individual use and download on October 4, 2014 to LEADER and READER for designated user PATTARAPORN SRITRAKOOL. No other reproduction or transmission in any form permitted without written permission of NFPA. For inquires or to report unauthorized use, contact licensing@nfpa.org.

Technical Committee on Private Water Supply Piping Systems (AUT-PRI)

Kenneth W. Wagoner, *Chair*
Parsley Consulting Engineers, CA [SE]

Richard W. Bonds, Ductile Iron Pipe Research Association, AL [M]
Phillip A. Brown, American Fire Sprinkler Association, Inc., TX [IM]
James A. Charrette, Allan Automatic Sprinkler Corp. of So. California, CA [IM]
Rep. National Fire Sprinkler Association
Flora F. Chen, City of Hayward, CA [E]
Stephen A. Clark, Jr., Allianz Risk Consultants, LLC, GA [I]
Jeffry T. Dudley, National Aeronautics & Space Administration, FL [U]
Byron E. Ellis, Entergy Corporation, LA [U]
Rep. Edison Electric Institute
Brandon W. Frakes, XL Global Asset Protection Services, NC [I]
David B. Fuller, FM Global, MA [I]
Robert M. Gagnon, Gagnon Engineering, MD [SE]
Tanya M. Glumac, Liberty Mutual Property, MA [I]
William J. Gotto, Global Risk Consultants Corporation, NJ [SE]
LaMar Hayward, 3-D Fire Protection, Inc., ID [IM]
Alan R. Laguna, Merit Sprinkler Company, Inc., LA [IM]
John Lake, City of Gainesville, FL [E]
Michael T. Larabel, Amway Inc., MI [U]
George E. Laverick, Underwriters Laboratories Inc., IL [RT]
James M. Maddry, James M. Maddry, P.E., GA [SE]
Kevin D. Maughan, Tyco Fire Protection Products, RI [M]
Bob D. Morgan, Fort Worth Fire Department, TX [E]
David S. Mowrer, Babcock & Wilcox Technical Services, LLC, TN [U]
Dale H. O'Dell, National Automatic Sprinkler Fitters LU 669, CA [L]
Rep. United Assn. of Journeymen & Apprentices of the Plumbing & Pipe Fitting Industry
Adam P. Olomon, Aon/RRS/Schirmer Engineering, TX [I]
Sam P. Salwan, Environmental Systems Design, Inc., IL [SE]
James R. Schifiliti, Fire Safety Consultants, Inc., IL [IM]
Rep. Illinois Fire Prevention Association
Peter T. Schwab, Wayne Automatic Fire Sprinklers, Inc., FL [IM]
J. William Sheppard, Sheppard & Associates, LLC, MI [SE]
Scott M. Twele, The RJA Group, Inc., CA [SE]
Karl Wiegand, National Fire Sprinkler Association, NY [M]

Alternates

James B. Biggins, Global Risk Consultants Corporation, IL [SE]
(Alt. to W. J. Gotto)
Mark A. Bowman, XL Global Asset Protection Services, OH [I]
(Alt. to B. W. Frakes)
Joshua Davis, The RJA Group, Inc., GA [SE]
(Alt. to S. M. Twele)
Steve L. Escue, TK Engineering Company, TN [M]
(Alt. to K. Wiegand)
Cliff Hartford, Tyco Fire & Building Products, NY [M]
(Alt. to K. D. Maughan)
Andrew C. Higgins, Allianz Risk Consultants, LLC, GA [I]
(Alt. to S. A. Clark, Jr.)
Luke Hilton, Liberty Mutual Property, NC [I]
(Alt. to T. M. Glumac)
Charles W. Ketner, National Automatic Sprinkler Fitters LU 669, MD [L]
(Alt. to D. H. O'Dell)
Michael G. McCormick, Underwriters Laboratories Inc., IL [RT]
(Alt. to G. E. Laverick)
Martin Ramos, Environmental Systems Design, Inc., IL [SE]
(Alt. to S. P. Salwan)
Jeffrey J. Rovegno, Mr. Sprinkler Fire Protection, CA [IM]
(Alt. to P. A. Brown)
Austin L. Smith, Babcock & Wilcox Y-12, LLC, TN [U]
(Alt. to D. S. Mowrer)
Ronald N. Webb, S.A. Comunale Company, Inc., OH [IM]
(Alt. to J. A. Charrette)

Matthew J. Klaus, NFPA Staff Liaison

This list represents the membership at the time the Committee was balloted on the final text of this edition. Since that time, changes in the membership may have occurred. A key to classifications is found at the back of the document.

NOTE: Membership on a committee shall not in and of itself constitute an endorsement of the Association or any document developed by the committee on which the member serves.

Committee Scope: This Committee shall have the primary responsibility for documents on private piping systems supplying water for fire protection and for hydrants, hose houses, and valves. The Committee is also responsible for documents on fire flow testing and marking of hydrants.

Copyright 2014 National Fire Protection Association (NFPA). Licensed, by agreement, for individual use and download on October 4, 2014 to LEADER and READER for designated user PATTARAPORN SRITRAKOOL. No other reproduction or transmission in any form permitted without written permission of NFPA. For inquires or to report unauthorized use, contact licensing@nfpa.org.

Technical Committee on Residential Sprinkler Systems (AUT-RSS)

Maurice M. Pilette, *Chair*
Mechanical Designs Ltd., MA [SE]

Kerry M. Bell, Underwriters Laboratories Inc., IL [RT]
Fred Benn, Advanced Automatic Sprinkler, Inc., CA [IM]
Jonathan C. Bittenbender, REHAU Incorporated, VA [M]
Frederick C. Bradley, FCB Engineering, GA [SE]
Phillip A. Brown, American Fire Sprinkler Association, Inc., TX [IM]
Thomas G. Deegan, The Viking Group, Inc., MI [M]
Rep. National Fire Sprinkler Association
Jeffrey Feid, State Farm Insurance Company, IL [I]
Dawn M. Flancher, American Water Works Association, CO [U]
Jeffrey S. Grove, The RJA Group, Inc., NV [SE]
Dana R. Haagensen, Massachusetts Department of Fire Services, MA [E]
Tonya L. Hoover, CAL Fire, Office of the State Fire Marshal, CA [E]
Mark Hopkins, Hughes Associates, Inc., MD [SE]
Kenneth E. Isman, National Fire Sprinkler Association, Inc., NY [M]
Gary L. Johnson, Lubrizol, FL [M]
Rep. Committee for Firesafe Dwellings
Charles W. Ketner, National Automatic Sprinkler Fitters LU 669, MD [L]
Rep. United Assn. of Journeymen & Apprentices of the Plumbing & Pipe Fitting Industry
Ronald G. Nickson, National Multi Housing Council, DC [U]
Michael O'Brian, Brighton Area Fire Authority, MI [E]
Rep. International Association of Fire Chiefs
Steven Orlowski, National Association of Home Builders, DC [U]
Milosh T. Puchovsky, Worcester Polytechnic Institute, MA [SE]
Scott C. Pugsley, Classic Fire Protection Inc., Canada [IM]
Rep. Canadian Automatic Sprinkler Association
Steven R. Rians, Standard Automatic Fire Enterprises, Inc., TX [IM]
Rep. American Fire Sprinkler Association
Chester W. Schirmer, Aon/Schirmer Engineering Corporation, NC [I]
Peter T. Schwab, Wayne Automatic Fire Sprinklers, Inc., FL [IM]
Harry Shaw, Fail Safe Safety Systems Inc., MD [M]
Matt Sigler, International Association of Plumbing & Mechanical Officials, CA [E]
Eric J. Skare, Uponor, Inc., MN [M]
George W. Stanley, Wiginton Fire Systems, FL [IM]
Rep. National Fire Sprinkler Association
Ed Van Walraven, Aspen Fire Protection District, CO [E]
Terry L. Victor, Tyco/SimplexGrinnell, MD [M]
Hong-Zeng Yu, FM Global, MA [I]

Alternates

David W. Ash, Lubrizol Advanced Materials, Inc., OH [M]
(Alt. to G. L. Johnson)
Robert S. Blach, Menlo Park Fire Protection District, CA [E]
(Alt. to M. O'Brian)
Lawrence Brown, National Association of Home Builders, DC [U]
(Alt. to S. Orlowski)
Edward K. Budnick, Hughes Associates, Inc., MD [SE]
(Alt. to M. Hopkins)
Bradford T. Cronin, Newport Fire Department, RI [E]
(Alt. to D. R. Haagensen)
Mark E. Fessenden, Tyco Fire Suppression & Building Products, RI [M]
(Alt. to T. L. Victor)
David B. Fuller, FM Global, MA [I]
(Alt. to H.-Z. Yu)
Jerry R. Hunter, Aon Fire Protection Engineering Corporation, TX [I]
(Alt. to C. W. Schirmer)
Thomas L. Jacquel, Thomas L. Jacquel Automatic Fire Sprinkler Consulting Services, MA [IM]
(Alt. to P. A. Brown)
Marshall A. Klein, Marshall A. Klein & Associates, Inc., MD [U]
(Alt. to R. G. Nickson)
George E. Laverick, Underwriters Laboratories Inc., IL [RT]
(Alt. to K. M. Bell)
Stephen M. Leyton, Protection Design and Consulting, CA [IM]
(Alt. to S. R. Rians)
Paul McCulloch, Uponor, Inc., MN [M]
(Alt. to E. J. Skare)
Thomas L. Multer, Reliable Automatic Sprinkler Company, Inc., SC [M]
(Alt. to T. G. Deegan)
David A. Nickelson, REHAU Incorporated, VA [M]
(Alt. to J. C. Bittenbender)
Matthew Osburn, Canadian Automatic Sprinkler Association, Canada [IM]
(Alt. to S. C. Pugsley)
Richard M. Ray, Cybor Fire Protection Company, IL [M]
(Alt. to K. E. Isman)
Ronald N. Webb, S.A. Comunale Company, Inc., OH [IM]
(Alt. to G. W. Stanley)

Nonvoting

Rohit Khanna, U.S. Consumer Product Safety Commission, MD [C]
M. Larry Maruskin, U.S. Department of Homeland Security, MD [C]
Lawrence A. McKenna, Jr., U.S. Department of Homeland Security, MD [C]

Matthew J. Klaus, NFPA Staff Liaison

This list represents the membership at the time the Committee was balloted on the final text of this edition. Since that time, changes in the membership may have occurred. A key to classifications is found at the back of the document.

NOTE: Membership on a committee shall not in and of itself constitute an endorsement of the Association or any document developed by the committee on which the member serves.

Committee Scope: This Committee shall have primary responsibility for documents on the design and installation of automatic sprinkler systems in dwellings and residential occupancies up to and including four stories in height, including the character and adequacy of water supplies, and the selection of sprinklers, piping, valves, and all materials and accessories.

Copyright 2014 National Fire Protection Association (NFPA). Licensed, by agreement, for individual use and download on October 4, 2014 to LEADER and READER for designated user PATTARAPORN SRITRAKOOL. No other reproduction or transmission in any form permitted without written permission of NFPA. For inquires or to report unauthorized use, contact licensing@nfpa.org.

Technical Committee on Sprinkler System Discharge Criteria (AUT-SSD)

Kenneth W. Linder, *Chair*
Swiss Re, CT [I]

Weston C. Baker, Jr., FM Global, MA [I]
Charles O. Bauroth, Liberty Mutual Property, MA [I]
Rep. Property Casualty Insurers Association of America
Kerry M. Bell, Underwriters Laboratories Inc., IL [RT]
Tracey D. Bellamy, Telgian Corporation, GA [U]
Rep. The Home Depot
Thomas C. Brown, The RJA Group, Inc., MD [SE]
Thomas G. Deegan, The Viking Group, Inc., MI [M]
John August Denhardt, Strickland Fire Protection, Inc., MD [IM]
Rep. American Fire Sprinkler Association
James E. Golinveaux, Tyco Fire Suppression & Building Products, RI [M]
Bo Hjorth, AlbaCon AB, Sweden [SE]
Alfred J. Hogan, Winter Haven, FL [E]
Rep. New England Association of Fire Marshals
Donald Hopkins, Jr., Hughes Associates, Inc., MD [SE]
Roland J. Huggins, American Fire Sprinkler Association, Inc., TX [IM]
Rep. American Fire Sprinkler Association
Kenneth E. Isman, National Fire Sprinkler Association, Inc., NY [M]
Sultan M. Javeri, SC Engineering, France [IM]
Larry Keeping, Vipond Fire Protection, Canada [IM]
Rep. Canadian Automatic Sprinkler Association
William E. Koffel, Koffel Associates, Inc., MD [SE]
A. Christine LaFleur, Sandia National Laboratories, NM [U]
Thomas L. Multer, Reliable Automatic Sprinkler Company, Inc., SC [M]
Rep. National Fire Sprinkler Association
Eric L. Packard, United Assn. of Journeymen & Apprentices of the Plumbing & Pipe Fitting Industry, MD [L]
Garner A. Palenske, Aon/Schirmer Engineering Corporation, CA [I]
Richard Pehrson, Pehrson Fire PC, MN [E]
Rep. International Fire Marshals Association
Michael D. Sides, XL Global Asset Protection Services, FL [I]
Jack W. Thacker, Allan Automatic Sprinkler Corp. of So. California, CA [IM]
Rep. National Fire Sprinkler Association

Alternates

Mark J. Aaby, Koffel Associates, Inc., MD [SE]
(Alt. to W. E. Koffel)
Ralph E. Bless, Jr., Telgian Corporation, GA [U]
(Alt. to T. D. Bellamy)
Mark A. Bowman, XL Global Asset Protection Services, OH [I]
(Alt. to M. D. Sides)
Edward K. Budnick, Hughes Associates, Inc., MD [SE]
(Alt. to D. Hopkins, Jr.)
John A. Carbone, Victaulic Company, PA [M]
(Alt. to T. L. Multer)
Pravinray D. Gandhi, Underwriters Laboratories Inc., IL [RT]
(Alt. to K. M. Bell)
Tanya M. Glumac, Liberty Mutual Property, MA [I]
(Alt. to C. O. Bauroth)
Thomas McNamara, United Assn. of Journeymen & Apprentices of the Plumbing & Pipe Fitting Industry, MI [L]
(Voting Alt. to UA Rep.)
Jack A. Medovich, Fire & Life Safety America, MD [IM]
(Alt. to R. J. Huggins)
Daniel J. O'Connor, Aon Fire Protection Engineering, IL [I]
(Alt. to G. A. Palenske)
Matthew Osburn, Canadian Automatic Sprinkler Association, Canada [IM]
(Alt. to L. Keeping)
Thomas Prymak, The RJA Group, Inc., TX [SE]
(Alt. to T. C. Brown)
Steven J. Scandaliato, SDG, LLC, AZ [IM]
(Alt. to J. A. Denhardt)
Peter T. Schwab, Wayne Automatic Fire Sprinklers, Inc., FL [M]
(Alt. to K. E. Isman)
George W. Stanley, Wiginton Fire Systems, FL [IM]
(Alt. to J. W. Thacker)
Peter W. Thomas, Tyco Fire Suppression & Building Products, RI [M]
(Alt. to J. E. Golinveaux)
Martin H. Workman, The Viking Corporation, MI [M]
(Alt. to T. G. Deegan)

Nonvoting

Barry M. Lee, Tyco International, Australia [M]

Matthew J. Klaus, NFPA Staff Liaison

This list represents the membership at the time the Committee was balloted on the final text of this edition. Since that time, changes in the membership may have occurred. A key to classifications is found at the back of the document.

NOTE: Membership on a committee shall not in and of itself constitute an endorsement of the Association or any document developed by the committee on which the member serves.

Committee Scope: This Committee shall have primary responsibility for those portions of NFPA 13 that pertain to the classification of various fire hazards and the determination of associated discharge criteria for sprinkler systems employing automatic and open sprinklers, sprinkler system plans and calculations, and water supplies.

Copyright 2014 National Fire Protection Association (NFPA). Licensed, by agreement, for individual use and download on October 4, 2014 to LEADER and READER for designated user PATTARAPORN SRITRAKOOL. No other reproduction or transmission in any form permitted without written permission of NFPA. For inquires or to report unauthorized use, contact licensing@nfpa.org.

Technical Committee on Sprinkler System Installation Criteria (AUT-SSI)

Joe W. Noble, *Chair*
Noble Consulting Services, LLC, NV [E]
Rep. International Fire Marshals Association

Hamid R. Bahadori, Hughes Associates, Inc., FL [SE]
Weston C. Baker, Jr., FM Global, MA [I]
Pat D. Brock, Oklahoma State University, OK [SE]
Phillip A. Brown, American Fire Sprinkler Association, Inc., TX [IM]
Robert G. Caputo, Fire & Life Safety America, CA [SE]
Del Dornbos, Viking Group, Inc., MI [M]
Rep. National Fire Sprinkler Association
Ralph D. Gerdes, Ralph Gerdes Consultants, LLC, IN [SE]
Rep. American Institute of Architects
Donald G. Goosman, The RJA Group, Inc., IL [SE]
Luke Hilton, Liberty Mutual Property, NC [I]
Rep. Property Casualty Insurers Association of America
Elwin G. Joyce, II, Eastern Kentucky University, KY [U]
Rep. NFPA Industrial Fire Protection Section
Larry Keeping, Vipond Fire Protection, Canada [IM]
Rep. Canadian Automatic Sprinkler Association
Charles W. Ketner, National Automatic Sprinkler Fitters LU 669, MD [L]
Rep. United Assn. of Journeymen & Apprentices of the Plumbing & Pipe Fitting Industry
Michael D. Kirn, Code Consultants, Inc., MO [SE]
James D. Lake, National Fire Sprinkler Association, Inc., MA [M]
George E. Laverick, Underwriters Laboratories Inc., IL [RT]
Kenneth W. Linder, Swiss Re, CT [I]
Ausmus S. Marburger, Fire Protection Industries, Inc., PA [IM]
Rep. National Fire Sprinkler Association
Rodney A. McPhee, Canadian Wood Council, Canada [U]
Michael F. Meehan, VSC Fire & Security, VA [IM]
Rep. American Fire Sprinkler Association
David S. Mowrer, Babcock & Wilcox Technical Services, LLC, TN [U]
Thomas A. Noble, City of Henderson, Building & Fire Safety, NV [E]
Janak B. Patel, Savannah River Nuclear Solutions, GA [U]
Peter T. Schwab, Wayne Automatic Fire Sprinklers, Inc., FL [IM]
LeJay Slocum, Aon Fire Protection Engineering, GA [I]
Paul A. Statt, Eastman Kodak Company, NY [U]
Leonard R. Swantek, Victaulic Company of America, PA [M]
Lynn K. Underwood, Axis US Property, IL [I]
Terry L. Victor, Tyco/SimplexGrinnell, MD [M]

Alternates

Kerry M. Bell, Underwriters Laboratories Inc., IL [RT]
(Alt. to G. E. Laverick)
Cecil Bilbo, Jr., Academy of Fire Sprinkler Technology, Inc., IL [IM]
(Alt. to P. A. Brown)
John A. Carbone, Victaulic Company, PA [M]
(Alt. to L. R. Swantek)
James A. Charrette, Allan Automatic Sprinkler Corp. of So. California, CA [IM]
(Alt. to A. S. Marburger)
Todd A. Dillon, XL Global Asset Protection Services, OH [I]
(Alt. to K. W. Linder)
David B. Fuller, FM Global, MA [I]
(Alt. to W. C. Baker, Jr.)
James E. Golinveaux, Tyco Fire Suppression & Building Products, RI [M]
(Alt. to T. L. Victor)
Mark Hopkins, Hughes Associates, Inc., MD [SE]
(Alt. to H. R. Bahadori)
Russell B. Leavitt, Telgian Corporation, AZ [IM]
(Alt. to M. F. Meehan)
Belynda Miranda, The RJA Group, Inc., VA [SE]
(Alt. to D. G. Goosman)
Matthew Osburn, Canadian Automatic Sprinkler Association, Canada [IM]
(Alt. to L. Keeping)
Michael A. Rothmier, UA Joint Apprenticeship Committee, CO [L]
(Alt. to C. W. Ketner)
Austin L. Smith, Babcock & Wilcox Y-12, LLC, TN [U]
(Alt. to D. S. Mowrer)
William B. Smith, Code Consultants, Inc., MO [SE]
(Alt. to M. D. Kirn)
Glenn E. Thompson, Liberty Mutual Property, CA [I]
(Alt. to L. Hilton)
Steven M. Tomlin, Aon/Schirmer Engineering Corporation, Canada [I]
(Alt. to L. Slocum)
Robert Vincent, Shambaugh & Son, L.P., IN [M]
(Alt. to J.D. Lake)

Nonvoting

Barry M. Lee, Tyco International, Australia [M]

Matthew J. Klaus, NFPA Staff Liaison

This list represents the membership at the time the Committee was balloted on the final text of this edition. Since that time, changes in the membership may have occurred. A key to classifications is found at the back of the document.

NOTE: Membership on a committee shall not in and of itself constitute an endorsement of the Association or any document developed by the committee on which the member serves.

Committee Scope: This Committee shall have the primary responsibility for those portions of NFPA 13 that pertain to the criteria for the use and installation of sprinkler systems components (with the exception of those components used for supporting of piping), position of sprinklers, types of systems, and acceptance testing.

Copyright 2014 National Fire Protection Association (NFPA). Licensed, by agreement, for individual use and download on October 4, 2014 to LEADER and READER for designated user PATTARAPORN SRITRAKOOL. No other reproduction or transmission in any form permitted without written permission of NFPA. For inquires or to report unauthorized use, contact licensing@nfpa.org.

Contents

Chapter 1 Administration **13–** 13
1.1 Scope **13–** 13
1.2 Purpose **13–** 13
1.3 Application **13–** 13
1.4 Retroactivity **13–** 13
1.5 Equivalency **13–** 13
1.6 Units and Symbols **13–** 13
1.7 New Technology **13–** 14

Chapter 2 Referenced Publications **13–** 14
2.1 General **13–** 14
2.2 NFPA Publications **13–** 15
2.3 Other Publications **13–** 15
2.4 References for Extracts in Mandatory Sections **13–** 17

Chapter 3 Definitions **13–** 17
3.1 General **13–** 17
3.2 NFPA Official Definitions **13–** 17
3.3 General Definitions **13–** 17
3.4 Sprinkler System Type Definitions **13–** 18
3.5 System Component Definitions **13–** 19
3.6 Sprinkler Definitions **13–** 19
3.7 Construction Definitions **13–** 20
3.8 Private Water Supply Piping Definitions **13–** 20
3.9 Storage Definitions **13–** 21
3.10 Marine Definitions **13–** 24
3.11 Hanging and Bracing Definitions **13–** 24

Chapter 4 General Requirements **13–** 24
4.1 Level of Protection **13–** 24
4.2 Limited Area Systems **13–** 25
4.3 Owner's Certificate **13–** 25
4.4 Additives **13–** 25
4.5 Air, Nitrogen, or Other Approved Gas **13–** 25
4.6 Support of Nonsprinkler System Components **13–** 25

Chapter 5 Classification of Occupancies and Commodities **13–** 25
5.1 Classification of Occupancies **13–** 25
5.2 Light Hazard Occupancies **13–** 25
5.3 Ordinary Hazard Occupancies **13–** 25
5.4 Extra Hazard Occupancies **13–** 25
5.5 Special Occupancy Hazards **13–** 25
5.6 Commodity Classification **13–** 25

Chapter 6 System Components and Hardware **13–** 27
6.1 General **13–** 27
6.2 Sprinklers **13–** 27
6.3 Aboveground Pipe and Tube **13–** 29
6.4 Fittings **13–** 31
6.5 Joining of Pipe and Fittings **13–** 31
6.6 Hangers **13–** 33
6.7 Valves **13–** 33
6.8 Fire Department Connections **13–** 33
6.9 Waterflow Alarm Devices **13–** 34
6.10 Signs **13–** 34

Chapter 7 System Requirements **13–** 34
7.1 Wet Pipe Systems **13–** 34
7.2 Dry Pipe Systems **13–** 34
7.3 Preaction Systems and Deluge Systems **13–** 36
7.4 Combined Dry Pipe and Preaction Systems for Piers, Terminals, and Wharves **13–** 38
7.5 Multi-Cycle Systems **13–** 38
7.6 Antifreeze Systems **13–** 38
7.7 Automatic Sprinkler Systems with Non–Fire Protection Connections **13–** 40
7.8 Outside Sprinklers for Protection Against Exposure Fires (Exposure Protection Sprinkler Systems) **13–** 41
7.9 Refrigerated Spaces **13–** 42
7.10 Commercial-Type Cooking Equipment and Ventilation **13–** 44
7.11 Additives and Coatings **13–** 45

Chapter 8 Installation Requirements **13–** 45
8.1 Basic Requirements **13–** 45
8.2 System Protection Area Limitations **13–** 45
8.3 Use of Sprinklers **13–** 46
8.4 Application of Sprinkler Types **13–** 49
8.5 Position, Location, Spacing, and Use of Sprinklers **13–** 50
8.6 Standard Pendent and Upright Spray Sprinklers **13–** 52
8.7 Sidewall Standard Spray Sprinklers **13–** 59
8.8 Extended Coverage Upright and Pendent Spray Sprinklers **13–** 62
8.9 Extended Coverage Sidewall Spray Sprinklers **13–** 67
8.10 Residential Sprinklers **13–** 70
8.11 CMSA Sprinklers **13–** 77
8.12 Early Suppression Fast-Response Sprinklers **13–** 79
8.13 In-Rack Sprinklers **13–** 82
8.14 Pilot Line Detectors **13–** 83
8.15 Special Situations **13–** 83
8.16 Piping Installation **13–** 89
8.17 System Attachments **13–** 93

Chapter 9 Hanging, Bracing, and Restraint of System Piping **13–** 96
9.1 Hangers **13–** 96
9.2 Installation of Pipe Hangers **13–**101

Copyright 2014 National Fire Protection Association (NFPA). Licensed, by agreement, for individual use and download on October 4, 2014 to LEADER and READER for designated user PATTARAPORN SRITRAKOOL. No other reproduction or transmission in any form permitted without written permission of NFPA. For inquires or to report unauthorized use, contact licensing@nfpa.org.

9.3 Protection of Piping Against Damage Where Subject to Earthquakes 13–104

Chapter 10 Underground Piping 13–113
10.1 Piping Materials 13–113
10.2 Fittings 13–113
10.3 Joining of Pipe and Fittings 13–113
10.4 Depth of Cover 13–113
10.5 Protection Against Freezing 13–115
10.6 Protection Against Damage 13–115
10.7 Requirement for Laying Pipe 13–115
10.8 Joint Restraint 13–116
10.9 Backfilling 13–118
10.10 Testing and Acceptance 13–118

Chapter 11 Design Approaches 13–121
11.1 General 13–121
11.2 Occupancy Hazard Fire Control Approach for Spray Sprinklers 13–122
11.3 Special Design Approaches 13–125

Chapter 12 General Requirements for Storage 13–126
12.1 General 13–126
12.2 Hose Connections 13–127
12.3 Adjacent Hazards or Design Methods 13–127
12.4 Wet Pipe Systems 13–127
12.5 Dry Pipe and Preaction Systems 13–127
12.6 Storage Applications 13–127
12.7 Discharge Considerations 13–127
12.8 Hose Stream Allowance and Water Supply Duration 13–128
12.9 Restrictions 13–128
12.10 Room Design Method 13–130
12.11 High-Expansion Foam Systems 13–130
12.12 Protection of Idle Pallets 13–130

Chapter 13 Miscellaneous Storage 13–132
13.1 Miscellaneous Storage Up to 12 ft (3.7 m) in Height 13–132
13.2 Design Basis 13–132
13.3 In-Rack Sprinklers 13–135

Chapter 14 Protection for Palletized, Solid-Piled, Bin Box, Shelf, or Back-to-Back Shelf Storage of Class I through Class IV Commodities 13–135
14.1 General 13–135
14.2 Control Mode Density/Area Sprinkler Protection Criteria for Palletized, Solid-Piled, Bin Box, Shelf, or Back-to-Back Shelf Storage of Class I Through Class IV Commodities 13–136
14.3 CMSA Sprinklers for Palletized or Solid-Piled Storage of Class I Through Class IV Commodities 13–137
14.4 Early Suppression Fast-Response (ESFR) Sprinklers for Palletized or Solid-Piled Storage of Class I Through Class IV Commodities 13–139
14.5 Special Design for Palletized, Solid-Piled, Bin Box, or Shelf Storage of Class I Through Class IV Commodities 13–139
14.6 High-Expansion Foam — Reduction to Ceiling Density 13–139

Chapter 15 Protection for Palletized, Solid-Piled, Bin Box, Shelf, or Back-to-Back Shelf Storage of Plastic and Rubber Commodities 13–141
15.1 General 13–141
15.2 Control Mode Density/Area Sprinkler Protection Criteria for Palletized, Solid-Piled, Bin Box, Shelf, or Back-to-Back Shelf Storage of Plastic and Rubber Commodities 13–141
15.3 CMSA Sprinklers for Palletized or Solid-Piled Storage of Plastic and Rubber Commodities 13–143
15.4 Early Suppression Fast-Response (ESFR) Sprinklers for Palletized or Solid-Piled Storage of Plastic and Rubber Commodities 13–143
15.5 High-Expansion Foam — Reduction in Ceiling Density 13–143

Chapter 16 Protection of Rack Storage of Class I Through Class IV Commodities 13–148
16.1 General 13–148
16.2 Protection Criteria for Rack Storage of Class I Through Class IV Commodities Stored Up to and Including 25 ft (7.6 m) in Height 13–149
16.3 Protection Criteria for Rack Storage of Class I Through Class IV Commodities Stored Over 25 ft (7.6 m) in Height 13–163

Chapter 17 Protection of Rack Storage of Plastic and Rubber Commodities 13–176
17.1 General 13–176
17.2 Protection Criteria for Rack Storage of Plastics Commodities Stored Up to and Including 25 ft (7.6 m) in Height 13–177
17.3 Protection Criteria for Rack Storage of Plastics Commodities Stored Over 25 ft (7.6 m) in Height 13–191

Copyright 2014 National Fire Protection Association (NFPA). Licensed, by agreement, for individual use and download on October 4, 2014 to LEADER and READER for designated user PATTARAPORN SRITRAKOOL. No other reproduction or transmission in any form permitted without written permission of NFPA. For inquires or to report unauthorized use, contact licensing@nfpa.org.

Chapter 18 Protection of Rubber Tire Storage **13–200**
18.1 General **13–200**
18.2 Columns Within Rubber Tire Storage **13–201**
18.3 Water Supplies **13–201**
18.4 Ceiling Systems **13–201**
18.5 In-Rack Sprinkler System Requirements for Protection of Rubber Tires **13–204**
18.6 Reduced-Discharge Density **13–204**

Chapter 19 Protection of Roll Paper **13–204**
19.1 Protection of Roll Paper Storage **13–204**

Chapter 20 Special Designs of Storage Protection **13–206**
20.1 General **13–206**
20.2 Plastic Motor Vehicle Components **13–206**
20.3 Sprinkler Design Criteria for Storage and Display of Class I Through Class IV Commodities, Cartoned Nonexpanded Group A Plastics and Nonexpanded Exposed Group A Plastics in Retail Stores **13–206**
20.4 Protection of Baled Cotton Storage **13–208**
20.5 Sprinkler Protection of Carton Records Storage with Catwalk Access **13–208**
20.6 Compact Storage of Commodities Consisting of Paper Files, Magazines, Books, and Similar Documents in Folders and Miscellaneous Supplies with No More Than 5 Percent Plastics Up to 8 ft (2.44 m) High **13–209**
20.7 Protection of High Bay Records Storage **13–209**

Chapter 21 Alternative Sprinkler System Designs for Chapters 12 Through 20 ..... **13–210**
21.1 General **13–210**
21.2 Sprinkler Protection Criteria for Palletized, Solid-Piled, Bin Box, Shelf, or Back-to-Back Shelf Storage of Class I Through Class IV and Plastic Commodities **13–210**
21.3 Sprinkler Protection Criteria for Open-Frame Rack Storage of Class I Through Class IV and Plastic Commodities **13–210**
21.4 Hose Stream Allowance and Water Supply Duration **13–210**
21.5 Minimum Obstruction Criteria **13–210**

Chapter 22 Special Occupancy Requirements **13–213**
22.1 General **13–213**
22.2 Flammable and Combustible Liquids **13–213**
22.3 Aerosol Products **13–213**
22.4 Spray Application Using Flammable or Combustible Materials **13–213**
22.5 Solvent Extraction Plants [NFPA 36] **13–214**
22.6 Installation and Use of Stationary Combustion Engines and Gas Turbines **13–214**
22.7 Nitrate Film **13–214**
22.8 Laboratories Using Chemicals **13–215**
22.9 Oxygen-Fuel Gas Systems for Welding, Cutting, and Allied Processes **13–215**
22.10 Acetylene Cylinder Charging Plants **13–215**
22.11 Compressed Gases and Cryogenic Fluids Code **13–215**
22.12 Utility LP-Gas Plants **13–216**
22.13 Production, Storage, and Handling of Liquefied Natural Gas (LNG) **13–216**
22.14 Protection of Information Technology Equipment **13–216**
22.15 Standard on Incinerators, and Waste and Linen Handling Systems and Equipment **13–216**
22.16 Standard for Ovens and Furnaces **13–217**
22.17 Health Care Facilities Code, Hyperbaric Chambers **13–217**
22.18 Fixed Guideway Transit and Passenger Rail Systems **13–218**
22.19 Motion Picture and Television Production Studio Soundstages, Approved Production Facilities, and Production Locations **13–218**
22.20 Animal Housing Facilities **13–218**
22.21 Water Cooling Towers **13–218**
22.22 Standard for the Construction and Fire Protection of Marine Terminals, Piers, and Wharves **13–220**
22.23 Semiconductor Fabrication Facilities **13–221**
22.24 Aircraft Hangars **13–221**
22.25 Airport Terminal Buildings, Fueling Ramp Drainage, and Loading Walkways **13–221**
22.26 Aircraft Engine Test Facilities **13–222**
22.27 Advanced Light Water Reactor Electric Generating Plants **13–222**
22.28 Light Water Nuclear Power Plants **13–223**
22.29 Hydroelectric Generating Plants [NFPA 851] **13–223**
22.30 Code for the Protection of Cultural Resource Properties — Museums, Libraries, and Places of Worship [NFPA 909] **13–224**
22.31 National Electrical Code **13–224**
22.32 Fire Protection of Telecommunication Facilities **13–224**

Copyright 2014 National Fire Protection Association (NFPA). Licensed, by agreement, for individual use and download on October 4, 2014 to LEADER and READER for designated user PATTARAPORN SRITRAKOOL. No other reproduction or transmission in any form permitted without written permission of NFPA. For inquires or to report unauthorized use, contact licensing@nfpa.org.

22.33 Exhaustion Systems for Air Conveying of Vapors, Gases, Mists, and Noncombustible Particulate Solids 13–224
22.34 Hypobaric Facilities 13–224
22.35 Coal Mines 13–225
22.36 Metal/Nonmetal Mining and Metal Mineral Processing Facilities 13–226
22.37 Hazardous Materials Code 13–226

Chapter 23 Plans and Calculations 13–229
23.1 Working Plans 13–229
23.2 Water Supply Information 13–230
23.3 Hydraulic Calculation Forms 13–230
23.4 Hydraulic Calculation Procedures 13–236
23.5 Pipe Schedules 13–239
23.6 Deluge Systems 13–242
23.7 Exposure Protection Sprinkler Systems 13–242
23.8 In-Rack Sprinklers 13–243
23.9 Hose Allowance 13–243

Chapter 24 Water Supplies 13–243
24.1 General 13–243
24.2 Types 13–243

Chapter 25 Systems Acceptance 13–244
25.1 Approval of Sprinkler Systems and Private Fire Service Mains 13–244
25.2 Acceptance Requirements 13–244
25.3 Circulating Closed Loop Systems 13–248
25.4 Instructions 13–249
25.5 Hydraulic Design Information Sign 13–249
25.6 General Information Sign 13–249

Chapter 26 Marine Systems 13–249
26.1 General 13–249
26.2 System Components, Hardware, and Use 13–250
26.3 System Requirements 13–251
26.4 Installation Requirements 13–251
26.5 Design Approaches 13–252
26.6 Plans and Calculations 13–252
26.7 Water Supplies 13–252
26.8 System Acceptance 13–254
26.9 System Instructions and Maintenance 13–254

Chapter 27 System Inspection, Testing, and Maintenance 13–254
27.1 General 13–254
27.2 Inactive Sprinkler Systems Abandoned in Place 13–254

Annex A Explanatory Material 13–254

Annex B Miscellaneous Topics 13–406

Annex C Explanation of Test Data and Procedures for Rack Storage 13–407

Annex D Sprinkler System Information from the 2012 Edition of the *Life Safety Code* 13–413

Annex E Development of the Design Approach to Conform with SEI/ASCE 7 13–417

Annex F Informational References 13–421

Index 13–424

Copyright 2014 National Fire Protection Association (NFPA). Licensed, by agreement, for individual use and download on October 4, 2014 to LEADER and READER for designated user PATTARAPORN SRITRAKOOL. No other reproduction or transmission in any form permitted without written permission of NFPA. For inquires or to report unauthorized use, contact licensing@nfpa.org.

NFPA 13

Standard for the

Installation of Sprinkler Systems

2013 Edition

IMPORTANT NOTE: This NFPA document is made available for use subject to important notices and legal disclaimers. These notices and disclaimers appear in all publications containing this document and may be found under the heading "Important Notices and Disclaimers Concerning NFPA Documents." They can also be obtained on request from NFPA or viewed at www.nfpa.org/disclaimers.

NOTICE: An asterisk (*) following the number or letter designating a paragraph indicates that explanatory material on the paragraph can be found in Annex A.

Changes other than editorial are indicated by a vertical rule beside the paragraph, table, or figure in which the change occurred. These rules are included as an aid to the user in identifying changes from the previous edition. Where one or more complete paragraphs have been deleted, the deletion is indicated by a bullet (•) between the paragraphs that remain.

A reference in brackets [ ] following a section or paragraph indicates material that has been extracted from another NFPA document. As an aid to the user, the complete title and edition of the source documents for extracts in mandatory sections of the document are given in Chapter 2 and those for extracts in informational sections are given in Annex F. Extracted text may be edited for consistency and style and may include the revision of internal paragraph references and other references as appropriate. Requests for interpretations or revisions of extracted text shall be sent to the technical committee responsible for the source document.

Information on referenced publications can be found in Chapter 2 and Annex F.

Chapter 1 Administration

1.1* Scope.

1.1.1 This standard shall provide the minimum requirements for the design and installation of automatic fire sprinkler systems and exposure protection sprinkler systems covered within this standard.

1.1.2 This standard shall not provide requirements for the design or installation of water mist fire protection systems, which are not considered fire sprinkler systems and are addressed by NFPA 750.

1.1.3* This standard is written with the assumption that the sprinkler system shall be designed to protect against a single fire originating within the building.

1.2* Purpose.

1.2.1 The purpose of this standard shall be to provide a reasonable degree of protection for life and property from fire through standardization of design, installation, and testing requirements for sprinkler systems, including private fire service mains, based on sound engineering principles, test data, and field experience.

1.2.2 Sprinkler systems and private fire service mains are specialized fire protection systems and shall require knowledgeable and experienced design and installation.

1.3 Application.

1.3.1 This standard shall apply to the following:

(1) Character and adequacy of water supplies
(2) Sprinklers
(3) Fittings
(4) Piping
(5) Valves
(6) All materials and accessories, including the installation of private fire service mains

1.3.2 This standard shall also apply to "combined service mains" used to carry water for both fire service and other uses as well as to mains for fire service use only.

1.4 Retroactivity. The provisions of this standard reflect a consensus of what is necessary to provide an acceptable degree of protection from the hazards addressed in this standard at the time the standard was issued.

1.4.1 Unless otherwise specified, the provisions of this standard shall not apply to facilities, equipment, structures, or installations that existed or were approved for construction or installation prior to the effective date of the standard. Where specified, the provisions of this standard shall be retroactive.

1.4.2 In those cases where the authority having jurisdiction determines that the existing situation presents an unacceptable degree of risk, the authority having jurisdiction shall be permitted to apply retroactively any portions of this standard deemed appropriate.

1.4.3 The retroactive requirements of this standard shall be permitted to be modified if their application clearly would be impractical in the judgment of the authority having jurisdiction, and only where it is clearly evident that a reasonable degree of safety is provided.

1.5 Equivalency. Nothing in this standard is intended to prevent the use of systems, methods, or devices of equivalent or superior quality, strength, fire resistance, effectiveness, durability, and safety over those prescribed by this standard.

1.5.1 Technical documentation shall be submitted to the authority having jurisdiction to demonstrate equivalency.

1.5.2 The system, method, or device shall be approved for the intended purpose by the authority having jurisdiction.

1.6 Units and Symbols.

1.6.1 Units.

1.6.1.1 Metric units of measurement in this standard shall be in accordance with the modernized metric system known as the International System of Units (SI).

1.6.1.2 Two units (liter and bar), outside of but recognized by SI, are commonly used in international fire protection.

1.6.1.3 These units with conversion factors shall be used as listed in Table 1.6.1.3.

1.6.1.4 If a value for measurement as given in this standard is followed by an equivalent value in other units, the first stated shall be regarded as the requirement.

Copyright 2014 National Fire Protection Association (NFPA). Licensed, by agreement, for individual use and download on October 4, 2014 to LEADER and READER for designated user PATTARAPORN SRITRAKOOL. No other reproduction or transmission in any form permitted without written permission of NFPA. For inquires or to report unauthorized use, contact licensing@nfpa.org.

Table 1.6.1.3 Conversion Factors

Name of Unit	Unit Symbol	Conversion Factor
liter	L	1 gal = 3.785 L
millimeter per minute	mm/min	1 gpm/ft^2 = 40.746 mm/min = 40.746 (L/min)/m^2
cubic decimeter	dm^3	1 gal = 3.785 dm^3
pascal	Pa	1 psi = 6894.757 Pa
bar	bar	1 psi = 0.0689 bar
bar	bar	1 bar = 10^5 Pa

Note: For additional conversions and information, see ASTM SI 10, *Standard for Use of the International System of Units (SI): The Modern Metric System.*

1.6.2 Hydraulic Symbols. The standard abbreviations in Table 1.6.2 shall be used on the hydraulic calculation form discussed in Chapter 23.

Table 1.6.2 Hydraulic Symbols

Symbol or Abbreviation	Item
p	Pressure in psi
gpm	U.S. gallons per minute
q	Flow increment in gpm to be added at a specific location
Q	Summation of flow in gpm at a specific location
P_t	Total pressure in psi at a point in a pipe
P_f	Pressure loss due to friction between points indicated in location column
P_e	Pressure due to elevation difference between indicated points. This can be a plus value or a minus value. If minus, the (−) shall be used; if plus, no sign is needed.
P_v	Velocity pressure in psi at a point in a pipe
P_n	Normal pressure in psi at a point in a pipe
E	90-degree ell
EE	45-degree ell
Lt.E	Long-turn elbow
Cr	Cross
T	Tee-flow turned 90 degrees
GV	Gate valve
BV	Butterfly (wafer) check valve
Del V	Deluge valve
ALV	Alarm valve
DPV	Dry pipe valve
CV	Swing check valve
WCV	Butterfly (wafer) check valve
St	Strainer
psi	Pounds per square inch
v	Velocity of water in pipe in feet per second
K	K-factor
C-factor	Friction loss coefficient

1.7 New Technology.

1.7.1 Nothing in this standard shall be intended to restrict new technologies or alternate arrangements, provided the level of safety prescribed by this standard is not lowered.

1.7.2 Materials or devices not specifically designated by this standard shall be utilized in complete accord with all conditions, requirements, and limitations of their listings.

Chapter 2 Referenced Publications

2.1 General. The documents or portions thereof listed in this chapter are referenced within this standard and shall be considered part of the requirements of this document.

2.2 NFPA Publications. National Fire Protection Association, 1 Batterymarch Park, Quincy, MA 02169-7471.

NFPA 11, *Standard for Low-, Medium-, and High-Expansion Foam,* 2010 edition.

NFPA 14, *Standard for the Installation of Standpipe and Hose Systems,* 2010 edition.

NFPA 15, *Standard for Water Spray Fixed Systems for Fire Protection,* 2012 edition.

NFPA 16, *Standard for the Installation of Foam-Water Sprinkler and Foam-Water Spray Systems,* 2011 edition.

NFPA 17, *Standard for Dry Chemical Extinguishing Systems,* 2009 edition.

NFPA 20, *Standard for the Installation of Stationary Pumps for Fire Protection,* 2013 edition.

NFPA 22, *Standard for Water Tanks for Private Fire Protection,* 2008 edition.

NFPA 24, *Standard for the Installation of Private Fire Service Mains and Their Appurtenances,* 2013 edition.

NFPA 25, *Standard for the Inspection, Testing, and Maintenance of Water-Based Fire Protection Systems,* 2011 edition.

NFPA 30, *Flammable and Combustible Liquids Code,* 2012 edition.

NFPA 30B, *Code for the Manufacture and Storage of Aerosol Products,* 2011 edition.

NFPA 33, *Standard for Spray Application Using Flammable or Combustible Materials,* 2011 edition.

NFPA 40, *Standard for the Storage and Handling of Cellulose Nitrate Film,* 2011 edition.

NFPA 51B, *Standard for Fire Prevention During Welding, Cutting, and Other Hot Work,* 2009 edition.

NFPA 70®, National Electrical Code®, 2011 edition.

NFPA 72®, National Fire Alarm and Signaling Code, 2013 edition.

NFPA 82, *Standard on Incinerators and Waste and Linen Handling Systems and Equipment,* 2009 edition.

NFPA 96, *Standard for Ventilation Control and Fire Protection of Commercial Cooking Operations,* 2011 edition.

NFPA *101®, Life Safety Code®,* 2012 edition.

NFPA 120, *Standard for Fire Prevention and Control in Coal Mines,* 2010 edition.

NFPA 170, *Standard for Fire Safety and Emergency Symbols,* 2012 edition.

NFPA 214, *Standard on Water-Cooling Towers,* 2011 edition.

• NFPA 259, *Standard Test Method for Potential Heat of Building Materials,* 2008 edition.

NFPA 400, *Hazardous Materials Code,* 2013 edition.

NFPA 409, *Standard on Aircraft Hangars,* 2011 edition.

NFPA 703, *Standard for Fire Retardant–Treated Wood and Fire-Retardant Coatings for Building Materials,* 2012 edition.

Copyright 2014 National Fire Protection Association (NFPA). Licensed, by agreement, for individual use and download on October 4, 2014 to LEADER and READER for designated user PATTARAPORN SRITRAKOOL. No other reproduction or transmission in any form permitted without written permission of NFPA. For inquires or to report unauthorized use, contact licensing@nfpa.org.

NFPA 750, *Standard on Water Mist Fire Protection Systems,* 2010 edition.

NFPA 780, *Standard for the Installation of Lightning Protection Systems,* 2011 edition.

NFPA 804, *Standard for Fire Protection for Advanced Light Water Reactor Electric Generating Plants,* 2010 edition.

NFPA 909, *Code for the Protection of Cultural Resource Properties — Museums, Libraries, and Places of Worship,* 2010 edition.

NFPA 1963, *Standard for Fire Hose Connections,* 2009 edition.

2.3 Other Publications.

2.3.1 ACI Publications. American Concrete Institue, P.O. Box 9094, Farmington Hills, MI 48333.

ACI 355.2, *Qualification of Post-Installed Mechanical Anchors in Concrete and Commentary*, 2007.

2.3.2 ASCE Publications. American Society of Civil Engineers, 1801 Alexander Bell Drive, Reston, VA 20191-4400.

SEI/ASCE 7, *Minimum Design Loads of Buildings and Other Structures,* 2005.

2.3.3 ASME Publications. American Society of Mechanical Engineers, Three Park Avenue, New York, NY 10016-5990.

ASME *Boiler and Pressure Vessel Code,* Section IX — "Welding and Brazing Qualifications," 2004.

ASME A17.1, *Safety Code for Elevators and Escalators*, 2010/CSA B44-10.

ASME B1.20.1, *Pipe Threads, General Purpose (Inch)*, 2001.

ASME B16.1, *Cast Iron Pipe Flanges and Flanged Fittings, Classes 25, 125, and 250*, 1998.

ASME B16.3, *Malleable Iron Threaded Fittings, Classes 150 and 300*, 1998.

ASME B16.4, *Cast Iron Threaded Fittings, Classes 125 and 250*, 1998.

ASME B16.5, *Pipe Flanges and Flanged Fittings*, 1996.

ASME B16.9, *Factory-Made Wrought Steel Buttwelding Fittings*, 2001.

ASME B16.11, *Forged Steel Fittings, Socket-Welding and Threaded*, 1996.

ASME B16.18, *Cast Copper Alloy Solder Joint Pressure Fittings*, 1994.

ASME B16.22, *Wrought Copper and Copper Alloy Solder Joint Pressure Fittings*, 1995.

ASME B16.25, *Buttwelding Ends*, 1997.

ANSI/ASME B31.1, *Code for Power Piping*, 2001.

ANSI/ASME B36.10M, *Welded and Seamless Wrought Steel Pipe*, 2000.

2.3.4 ASTM Publications. ASTM International, 100 Barr Harbor Drive, P.O. Box C700, West Conshohocken, PA 19428-2959.

ANSI/ASTM A 53, *Standard Specification for Pipe, Steel, Black and Hot-Dipped, Zinc-Coated, Welded and Seamless*, 2001.

ASTM A 106, *Standard Specification for Seamless Carbon Steel Pipe for High Temperature Service*, 2008.

ASTM A 135, *Standard Specification for Electric-Resistance-Welded Steel Pipe*, 2001.

ASTM A 153A/153M, *Standard Specification for Zinc Coating (Hot Dip) on Iron and Steel Hardware*, 2004.

ASTM A 234, *Standard Specification for Piping Fittings of Wrought-Carbon Steel and Alloy Steel for Moderate and High Temperature Service*, 2001.

ASTM A 795, *Standard Specification for Black and Hot-Dipped Zinc-Coated (Galvanized) Welded and Seamless Steel Pipe for Fire Protection Use*, 2000.

ASTM B 16.15, *Cast Bronze Threaded Fittings*, 1985.

ASTM B 32, *Standard Specification for Solder Metal*, 2000.

ASTM B 43, *Specification for Seamless Red Brass Pipe*, 2009.

ASTM B 75, *Standard Specification for Seamless Copper Tube*, 1999.

ASTM B 88, *Standard Specification for Seamless Copper Water Tube*, 1999.

ASTM B 251, *Standard Specification for General Requirements for Wrought Seamless Copper and Copper-Alloy Tube*, 1997.

ASTM B 446, *Standard Specification for Nickel-Chromium-Molybdenum-Columbium Alloy (UNSN 06625) and Nickel-Chromium-Molybdenum-Silicon Alloy (UNSN 06219) Rod and Bar*, 2000.

ASTM B 813, *Standard Specification for Liquid and Paste Fluxes for Soldering Applications of Copper and Copper-Alloy Tube*, 2000.

ASTM B 828, *Standard Practice for Making Capillary Joints by Soldering of Copper and Copper Alloy Tube and Fittings*, 2000.

ASTM C 635, *Standard Specification for the Manufacture, Performance, and Testing of Metal Suspension Systems for Acoustical Tile and Lay-In Panel Ceilings*, 2004.

ASTM C 636, *Standard Practice for Installation of Metal Ceiling Suspension Systems for Acoustical Tile and Lay-In Panels*, 2004.

ASTM E 84, *Standard Test Method for Surface Burning Characteristics of Building Materials*, 2010.

ASTM E 119, *Standard Test Methods for Fire Tests of Building Construction and Materials*, 2010.

ASTM E 136, *Standard Test Method for Behavior of Materials in a Vertical Tube Furnace at 750°C*, 1999.

ASTM F 437, *Standard Specification for Threaded Chlorinated Poly (Vinyl Chloride) (CPVC) Plastic Pipe Fittings, Schedule 80*, 1999.

ASTM F 438, *Standard Specification for Socket-Type Chlorinated Poly (Vinyl Chloride) (CPVC) Plastic Pipe Fittings, Schedule 40*, 2001.

ASTM F 439, *Standard Specification for Socket-Type Chlorinated Poly (Vinyl Chloride) (CPVC) Plastic Pipe Fittings, Schedule 80*, 2001.

ASTM F 442, *Standard Specification for Chlorinated Poly (Vinyl Chloride) (CPVC) Plastic Pipe (SDR-PR)*, 2009.

ASTM F 1121, *Standard Specification for International Shore Connections for Marine Fire Applications*, 1998.

ASTM SI 10, *Standard for Use of the International System of Units (SI): The Modern Metric System*, 1997.

2.3.5 AWS Publications. American Welding Society, 550 N.W. LeJeune Road, Miami, FL 33126.

AWS A5.8, *Specification for Filler Metals for Brazing and Braze Welding*, 1992.

AWS B2.1, *Specification for Welding Procedure and Performance Qualification*, 2000.

Copyright 2014 National Fire Protection Association (NFPA). Licensed, by agreement, for individual use and download on October 4, 2014 to LEADER and READER for designated user PATTARAPORN SRITRAKOOL. No other reproduction or transmission in any form permitted without written permission of NFPA. For inquires or to report unauthorized use, contact licensing@nfpa.org.

2.3.6 AWWA Publications. American Water Works Association, 6666 West Quincy Avenue, Denver, CO 80235.

AWWA C104, *Cement Mortar Lining for Ductile Iron Pipe and Fittings for Water,* 1995.

AWWA C105, *Polyethylene Encasement for Ductile Iron Pipe Systems,* 1999.

AWWA C110, *Ductile Iron and Gray Iron Fittings, 3-in. Through 48-in. (76 mm Through 1219 mm), for Water and Other Liquids,* 1998.

AWWA C111, *Rubber Gasket Joints for Ductile Iron Pressure Pipe and Fittings,* 2000.

AWWA C115, *Flanged Ductile Iron Pipe with Ductile Iron or Gray Iron Threaded Flanges,* 1999.

AWWA C116, *Protective Fusion-Bonded Epoxy Coatings Internal and External Surface Ductile-Iron/Gray-Iron Fittings,* 2003.

AWWA C150, *Thickness Design of Ductile Iron Pipe,* 1996.

AWWA C151, *Ductile Iron Pipe, Centrifugally Cast for Water,* 1996.

AWWA C153, *Ductile-Iron Compact Fittings for Water Service,* 2000.

AWWA C200, *Steel Water Pipe 6 in. (150 mm) and Larger,* 1997.

AWWA C203, *Coal-Tar Protective Coatings and Linings for Steel Water Pipelines Enamel and Tape — Hot Applied,* 1997.

AWWA C205, *Cement-Mortar Protective Lining and Coating for Steel Water Pipe 4 in. (100 mm) and Larger — Shop Applied,* 2000.

AWWA C206, *Field Welding of Steel Water Pipe,* 1997.

AWWA C207, *Steel Pipe Flanges for Waterworks Service — Sizes 4 in. Through 144 in. (100 mm Through 3,600 mm),* 1994.

AWWA C208, *Dimensions for Fabricated Steel Water Pipe Fittings,* 1996.

AWWA C300, *Reinforced Concrete Pressure Pipe, Steel-Cylinder Type, for Water and Other Liquids,* 1997.

AWWA C301, *Prestressed Concrete Pressure Pipe, Steel-Cylinder Type, for Water and Other Liquids,* 1999.

AWWA C302, *Reinforced Concrete Pressure Pipe, Non-Cylinder Type, for Water and Other Liquids,* 1995.

AWWA C303, *Reinforced Concrete Pressure Pipe, Steel-Cylinder Type, Pretensioned, for Water and Other Liquids,* 1995.

AWWA C400, *Standard for Asbestos-Cement Distribution Pipe, 4 in. Through 16 in. (100 mm Through 400 mm), for Water and Other Liquids,* 1998.

AWWA C401, *Standard Practice for the Selection of Asbestos-Cement Water Pipe, 4 in. Through 16 in. (100 mm Through 400 mm),* 1998.

AWWA C600, *Standard for the Installation of Ductile Iron Water Mains and Their Appurtenances,* 1999.

AWWA C602, *Cement-Mortar Lining of Water Pipe Lines 4 in. (100 mm) and Larger — in Place,* 2000.

AWWA C603, *Standard for the Installation of Asbestos-Cement Water Pipe,* 1996.

AWWA C900, *Polyvinyl Chloride (PVC) Pressure Pipe, 4 in. Through 12 in. (100 mm Through 300 mm), for Water and Other Liquids,* 1997.

AWWA C906, *Polyethylene (PE) Pressure Pipe and Fittings, 4 in. (100 mm) Th. 63 in (1,575 mm), for Water Distribution and Transportation,* 1999.

AWWA M11, *A Guide for Steel Pipe Design and Installation,* 3rd edition, 1989.

2.3.7 IEEE Publications. Institute of Electrical and Electronics Engineers, Three Park Avenue, 17th Floor, New York, NY 10016-5997.

IEEE 45, *Recommended Practice for Electric Installations on Shipboard,* 1998.

2.3.8 UL Publications. Underwriters Laboratories Inc., 333 Pfingsten Road, Northbrook, IL 60062-2096.

ANSI/UL 62, *Flexible Cords and Cables,* 2010.

ANSI/UL 723, *Standard for Surface Burning Characteristics of Building Materials,* 2008, Revised 2010.

ANSI/UL 1581, *Reference Standard for Electrical Wires, Cables, and Flexible Cords,* 2011.

2.3.9 U.S. Government Publications. U.S. Government Printing Office, Washington, DC 20402.

Title 46, CFR, Parts 54.15-10 Safety and Relief Valves, 56.20 Valves, 56.20-5(a) Markings, 56.50-95 Overboard Discharges and Shore Connections, 56.60 Materials, and 58.01-40 Machinery, Angle of Inclination.

Title 46, CFR, Subchapter F, "Marine Engineering."

Title 46, CFR, Subchapter J, "Electrical Engineering."

2.3.10 Other Publications.

Merriam-Webster's Collegiate Dictionary, 11th edition, Merriam-Webster, Inc., Springfield, MA, 2003.

2.4 References for Extracts in Mandatory Sections.

NFPA 1, *Fire Code,* 2012 edition.

NFPA 24, *Standard for the Installation of Private Fire Service Mains and Their Appurtenances,* 2013 edition.

NFPA 33, *Standard for Spray Application Using Flammable or Combustible Materials,* 2011 edition.

NFPA 37, *Standard for the Installation and Use of Stationary Combustion Engines and Gas Turbines,* 2010 edition.

NFPA 40, *Standard for the Storage and Handling of Cellulose Nitrate Film,* 2011 edition.

NFPA 45, *Standard on Fire Protection for Laboratories Using Chemicals,* 2011 edition.

NFPA 51, *Standard for the Design and Installation of Oxygen–Fuel Gas Systems for Welding, Cutting, and Allied Processes,* 2013 edition.

NFPA 51A, *Standard for Acetylene Cylinder Charging Plants,* 2012 edition.

NFPA 55, *Compressed Gases and Cryogenic Fluids Code,* 2013 edition.

NFPA 59, *Utility LP-Gas Plant Code,* 2012 edition.

NFPA 59A, *Standard for the Production, Storage, and Handling of Liquefied Natural Gas (LNG),* 2013 edition.

NFPA 70®, National Electrical Code®, 2011 edition.

NFPA 75, *Standard for the Fire Protection of Information Technology Equipment,* 2013 edition.

NFPA 76, *Standard for the Fire Protection of Telecommunications Facilities,* 2012 edition.

NFPA 82, *Standard on Incinerators and Waste and Linen Handling Systems and Equipment,* 2009 edition.

NFPA 86, *Standard for Ovens and Furnaces,* 2011 edition.

NFPA 91, *Standard for Exhaust Systems for Air Conveying of Vapors, Gases, Mists, and Noncombustible Particulate Solids,* 2010 edition.

NFPA 99, *Health Care Facilities Code,* 2012 edition.

NFPA 99B, *Standard for Hypobaric Facilities,* 2010 edition.

Copyright 2014 National Fire Protection Association (NFPA). Licensed, by agreement, for individual use and download on October 4, 2014 to LEADER and READER for designated user PATTARAPORN SRITRAKOOL. No other reproduction or transmission in any form permitted without written permission of NFPA. For inquires or to report unauthorized use, contact licensing@nfpa.org.

NFPA 120, *Standard for Fire Prevention and Control in Coal Mines,* 2010 edition.

NFPA 122, *Standard for Fire Prevention and Control in Metal/Nonmetal Mining and Metal Mineral Processing Facilities,* 2010 edition.

NFPA 130, *Standard for Fixed Guideway Transit and Passenger Rail Systems,* 2010 edition.

NFPA 140, *Standard on Motion Picture and Television Production Studio Soundstages, Approved Production Facilities, and Production Locations,* 2008 edition.

NFPA 150, *Standard on Fire and Life Safety in Animal Housing Facilities,* 2013 edition.

NFPA 214, *Standard on Water-Cooling Towers,* 2011 edition.

NFPA 307, *Standard for the Construction and Fire Protection of Marine Terminals, Piers, and Wharves,* 2011 edition.

NFPA 318, *Standard for the Protection of Semiconductor Fabrication Facilities,* 2012 edition.

NFPA 400, *Hazardous Materials Code,* 2013 edition.

NFPA 415, *Standard on Airport Terminal Buildings, Fueling Ramp Drainage, and Loading Walkways,* 2013 edition.

NFPA 423, *Standard for Construction and Protection of Aircraft Engine Test Facilities,* 2010 edition.

NFPA 804, *Standard for Fire Protection for Advanced Light Water Reactor Electric Generating Plants,* 2010 edition.

NFPA 805, *Performance-Based Standard for Fire Protection for Light Water Reactor Electric Generating Plants,* 2010 edition.

NFPA 851, *Recommended Practice for Fire Protection for Hydroelectric Generating Plants,* 2010 edition.

NFPA 909, *Code for the Protection of Cultural Resource Properties — Museums, Libraries, and Places of Worship,* 2010 edition.

Chapter 3 Definitions

3.1 General. The definitions contained in this chapter shall apply to the terms used in this standard. Where terms are not defined in this chapter or within another chapter, they shall be defined using their ordinarily accepted meanings within the context in which they are used. *Merriam-Webster's Collegiate Dictionary,* 11th edition, shall be the source for the ordinarily accepted meaning.

3.2 NFPA Official Definitions.

3.2.1* Approved. Acceptable to the authority having jurisdiction.

3.2.2* Authority Having Jurisdiction (AHJ). An organization, office, or individual responsible for enforcing the requirements of a code or standard, or for approving equipment, materials, an installation, or a procedure.

3.2.3* Listed. Equipment, materials, or services included in a list published by an organization that is acceptable to the authority having jurisdiction and concerned with evaluation of products or services, that maintains periodic inspection of production of listed equipment or materials or periodic evaluation of services, and whose listing states that either the equipment, material, or service meets appropriate designated standards or has been tested and found suitable for a specified purpose.

3.2.4 Shall. Indicates a mandatory requirement.

3.2.5 Should. Indicates a recommendation or that which is advised but not required.

3.2.6 Standard. A document, the main text of which contains only mandatory provisions using the word "shall" to indicate requirements and which is in a form generally suitable for mandatory reference by another standard or code or for adoption into law. Nonmandatory provisions are not to be considered a part of the requirements of a standard and shall be located in an appendix, annex, footnote, informational note, or other means as permitted in the *Manual of Style for NFPA Technical Committee Documents.*

3.3 General Definitions.

3.3.1 Automatic Sprinkler. A fire suppression or control device that operates automatically when its heat-activated element is heated to its thermal rating or above, allowing water to discharge over a specified area.

3.3.2* Bathroom. Within a dwelling unit, any room or compartment dedicated to personal hygiene, containing a toilet, sink, or bathing capability such as a shower or tub.

3.3.3 Ceiling Height. The distance between the floor and the underside of the ceiling above (or roof deck) within the area.

3.3.4* Ceiling Pocket. An architectural ceiling feature that consists of a bounded area of ceiling located at a higher elevation than the attached lower ceiling.

3.3.5 Ceiling Types.

3.3.5.1 ***Flat Ceiling.*** A continuous ceiling in a single plane.

3.3.5.2 ***Horizontal Ceiling.*** A ceiling with a slope not exceeding 2 in 12.

3.3.5.3 ***Sloped Ceiling.*** A ceiling with a slope exceeding 2 in 12.

3.3.5.4 ***Smooth Ceiling.*** A continuous ceiling free from significant irregularities, lumps, or indentations.

3.3.6 Compartment. A space completely enclosed by walls and a ceiling. Each wall in the compartment is permitted to have openings to an adjoining space if the openings have a minimum lintel depth of 8 in. (200 mm) from the ceiling and the total width of the openings in each wall does not exceed 8 ft (2.4 m). A single opening of 36 in. (900 mm) or less in width without a lintel is permitted when there are no other openings to adjoining spaces.

3.3.7* Control Valve. A valve controlling flow to water-based fire protection systems.

3.3.8* Draft Curtain. A continuous material protruding downward from the ceiling to create a reservoir for collecting smoke and heat.

3.3.9 Drop-Out Ceiling. A suspended ceiling system, which is installed below the sprinklers, with listed translucent or opaque panels that are heat sensitive and fall from their setting when exposed to heat.

3.3.10 Dwelling Unit (for sprinkler system installations). One or more rooms arranged for the use of one or more individuals living together, as in a single housekeeping unit normally having cooking, living, sanitary, and sleeping facilities that include, but are not limited to, hotel rooms, dormitory rooms, apartments, condominiums, sleeping rooms in nursing homes, and similar living units.

3.3.11 Fire Control. Limiting the size of a fire by distribution of water so as to decrease the heat release rate and pre-wet adjacent combustibles, while controlling ceiling gas temperatures to avoid structural damage.

Copyright 2014 National Fire Protection Association (NFPA). Licensed, by agreement, for individual use and download on October 4, 2014 to LEADER and READER for designated user PATTARAPORN SRITRAKOOL. No other reproduction or transmission in any form permitted without written permission of NFPA. For inquires or to report unauthorized use, contact licensing@nfpa.org.

3.3.12 Fire Suppression. Sharply reducing the heat release rate of a fire and preventing its regrowth by means of direct and sufficient application of water through the fire plume to the burning fuel surface.

3.3.13 Fuel-Fired Heating Unit. An appliance that produces heat by burning fuel.

3.3.14 High Volume Low Speed Fan. A ceiling fan that is approximately 6 ft to 24 ft in diameter with a rotational speed of approximately 30 to 70 revolutions per minute.

3.3.15 Hydraulically Designed System. A calculated sprinkler system in which pipe sizes are selected on a pressure loss basis to provide a prescribed water density, in gallons per minute per square foot (mm/min), or a prescribed minimum discharge pressure or flow per sprinkler, distributed with a reasonable degree of uniformity over a specified area.

3.3.16* Limited-Combustible (Material). Refers to a building construction material not complying with the definition of noncombustible material that, in the form in which it is used, has a potential heat value not exceeding 3500 Btu/lb (8141 kJ/kg), where tested in accordance with NFPA 259, and includes either of the following: (1) materials having a structural base of noncombustible material, with a surfacing not exceeding a thickness of ⅛ in. (3.2 mm) that has a flame spread index not greater than 50; or (2) materials, in the form and thickness used, having neither a flame spread index greater than 25 nor evidence of continued progressive combustion, and of such composition that surfaces that would be exposed by cutting through the material on any plane would have neither a flame spread index greater than 25 nor evidence of continued progressive combustion, when tested in accordance with ASTM E 84, *Standard Test Method of Surface Burning Characteristics of Building Materials,* or ANSI/UL 723, *Standard Test Method of Surface Burning Characteristics of Building Materials.*

3.3.17 Noncombustible Material. A material that, in the form in which it is used and under the conditions anticipated, will not ignite, burn, support combustion, or release flammable vapors, when subjected to fire or heat; materials that are reported as passing ASTM E 136, *Standard Test Method for Behavior of Materials in a Vertical Tube Furnace at 750°C,* shall be considered noncombustible materials.

3.3.18 Obstruction.

3.3.18.1 ***Continuous Obstruction.*** An obstruction located at or below the level of sprinkler deflectors that affect the discharge pattern of two or more adjacent sprinklers.

3.3.18.2 ***Noncontinuous Obstruction.*** An obstruction at or below the level of the sprinkler deflector that affects the discharge pattern of a single sprinkler.

3.3.19* Raw Water Source. A water supply that has not been treated and could contain foreign material that could enter the sprinkler system.

3.3.20 Shop-Welded. As used in this standard, *shop* in the term *shop-welded* means either (1) a sprinkler contractor's or fabricator's premise or (2) an area specifically designed or authorized for welding, such as a detached outside location, maintenance shop, or other area (either temporary or permanent) of noncombustible or fire-resistive construction free of combustible and flammable contents and suitably segregated from adjacent areas.

3.3.21 Small Room. A compartment of light hazard occupancy classification having unobstructed construction and a floor area not exceeding 800 ft^2 (74.3 m^2).

3.3.22* Sprinkler System. A system that consists of an integrated network of piping designed in accordance with fire protection engineering standards that includes a water supply source, a water control valve, a waterflow alarm, and a drain and is commonly activated by heat from a fire, discharging water over the fire area. The portion of the sprinkler system above ground is a network of specifically sized or hydraulically designed piping installed in a building, structure, or area, generally overhead, and to which sprinklers are attached in a systematic pattern. The system is commonly activated by heat from a fire and discharges water over the fire area.

3.3.23 System Working Pressure. The maximum anticipated static (nonflowing) or flowing pressure applied to sprinkler system components exclusive of surge pressures and exclusive of pressure from the fire department connection.

3.3.24 Thermal Barrier. A material that limits the average temperature rise of the unexposed surface to not more than 250°F (139°C) above ambient for a specified fire exposure duration using the standard time–temperature curve of ASTM E 119, *Standard Test Methods for Fire Tests of Building Construction and Materials.*

3.4 Sprinkler System Type Definitions.

3.4.1 Antifreeze Sprinkler System. A wet pipe system using automatic sprinklers that contains a liquid solution to prevent freezing of the system, intended to discharge the solution upon sprinkler operation, followed immediately by water from a water supply.

3.4.1.1 ***Premixed Antifreeze Solution.*** A mixture of an antifreeze material with water that is prepared and factory-mixed by the manufacturer with a quality control procedure in place that ensures that the antifreeze solution remains homogeneous and that the concentration is as specified.

3.4.2 Circulating Closed-Loop Sprinkler System. A wet pipe sprinkler system having non–fire protection connections to automatic sprinkler systems in a closed-loop piping arrangement for the purpose of utilizing sprinkler piping to conduct water for heating or cooling, where water is not removed or used from the system but only circulated through the piping system.

3.4.3 Combined Dry Pipe–Reaction Sprinkler System. A sprinkler system employing automatic sprinklers attached to a piping system containing air under pressure with a supplemental detection system installed in the same areas as the sprinklers. Operation of the detection system actuates tripping devices that open dry pipe valves simultaneously and without loss of air pressure in the system. The detection system also serves as an automatic fire alarm system.

3.4.4 Deluge Sprinkler System. A sprinkler system employing open sprinklers or nozzles that are attached to a piping system that is connected to a water supply through a valve that is opened by the operation of a detection system installed in the same areas as the sprinklers or the nozzles. When this valve opens, water flows into the piping system and discharges from all sprinklers or nozzles attached thereto.

3.4.5 Dry Pipe Sprinkler System. A sprinkler system employing automatic sprinklers that are attached to a piping system containing air or nitrogen under pressure, the release of which (as from

Copyright 2014 National Fire Protection Association (NFPA). Licensed, by agreement, for individual use and download on October 4, 2014 to LEADER and READER for designated user PATTARAPORN SRITRAKOOL. No other reproduction or transmission in any form permitted without written permission of NFPA. For inquires or to report unauthorized use, contact licensing@nfpa.org.

the opening of a sprinkler) permits the water pressure to open a valve known as a dry pipe valve, and the water then flows into the piping system and out the opened sprinklers.

3.4.6* Gridded Sprinkler System. A sprinkler system in which parallel cross mains are connected by multiple branch lines, causing an operating sprinkler to receive water from both ends of its branch line while other branch lines help transfer water between cross mains.

3.4.7* Looped Sprinkler System. A sprinkler system in which multiple cross mains are tied together so as to provide more than one path for water to flow to an operating sprinkler and branch lines are not tied together.

3.4.8 Multicycle System. A type of sprinkler system capable of repeated on–off flow cycles in response to heat.

3.4.9 Pipe Schedule System. A sprinkler system in which the pipe sizing is selected from a schedule that is determined by the occupancy classification and in which a given number of sprinklers are allowed to be supplied from specific sizes of pipe.

3.4.10* Preaction Sprinkler System. A sprinkler system employing automatic sprinklers that are attached to a piping system that contains air that might or might not be under pressure, with a supplemental detection system installed in the same areas as the sprinklers.

3.4.11 Wet Pipe Sprinkler System. A sprinkler system employing automatic sprinklers attached to a piping system containing water and connected to a water supply so that water discharges immediately from sprinklers opened by heat from a fire.

3.5* System Component Definitions.

3.5.1 Air Receiver. A chamber, compatible with an air compressor, that can store air under pressure that is higher in pressure than that in the dry pipe or preaction system piping.

3.5.2 Air Reservoir. A chamber that can store air at the same pressure that is in the wet pipe system piping.

3.5.3 Arm-Over. A horizontal pipe that extends from the branch line to a single sprinkler or a sprinkler above and below a ceiling.

3.5.4 Branch Lines. The pipes supplying sprinklers, either directly or through sprigs, drops, return bends, or arm-overs.

3.5.5 Cross Mains. The pipes supplying the branch lines, either directly or through riser nipples.

3.5.6 Feed Mains. The pipes supplying cross mains, either directly or through risers.

3.5.7 Flexible Listed Pipe Coupling. A listed coupling or fitting that allows axial displacement, rotation, and at least 1 degree of angular movement of the pipe without inducing harm on the pipe. For pipe diameters of 8 in. (203.2 mm) and larger, the angular movement shall be permitted to be less than 1 degree but not less than 0.5 degree.

3.5.8 Riser Nipple. Vertical piece of pipe between the main and branch line.

3.5.9 Risers. The vertical supply pipes in a sprinkler system.

3.5.10 Sprig. A pipe that rises vertically and supplies a single sprinkler.

3.5.11 Supervisory Device. A device arranged to supervise the operative condition of automatic sprinkler systems.

3.5.12 System Riser. The aboveground horizontal or vertical pipe between the water supply and the mains (cross or feed) that contains a control valve (either directly or within its supply pipe), pressure gauge, drain, and a waterflow alarm device.

3.5.13 Waterflow Alarm Device. An attachment to the sprinkler system that detects a predetermined water flow and is connected to a fire alarm system to initiate an alarm condition or is used to mechanically or electrically initiate a fire pump or local audible or visual alarm.

3.6 Sprinkler Definitions.

3.6.1* General Sprinkler Characteristics. The following are characteristics of a sprinkler that define its ability to control or extinguish a fire. (1) Thermal sensitivity. A measure of the rapidity with which the thermal element operates as installed in a specific sprinkler or sprinkler assembly. One measure of thermal sensitivity is the response time index (RTI) as measured under standardized test conditions. (a) Sprinklers defined as fast response have a thermal element with an RTI of 50 $(\text{meters-seconds})^{1/2}$ or less. (b) Sprinklers defined as standard response have a thermal element with an RTI of 80 $(\text{meters-seconds})^{1/2}$ or more. (2) Temperature rating. (3) K-factor *(see Chapter 6)*. (4) Installation orientation *(see 3.6.2)*. (5) Water distribution characteristics (i.e., application rate, wall wetting). (6) Special service conditions *(see 3.6.3)*.

3.6.2 Installation Orientation. The following sprinklers are defined according to orientation.

3.6.2.1 ***Concealed Sprinkler.*** A recessed sprinkler with cover plate.

3.6.2.2 ***Flush Sprinkler.*** A sprinkler in which all or part of the body, including the shank thread, is mounted above the lower plane of the ceiling.

3.6.2.3 ***Pendent Sprinkler.*** A sprinkler designed to be installed in such a way that the water stream is directed downward against the deflector.

3.6.2.4 ***Recessed Sprinkler.*** A sprinkler in which all or part of the body, other than the shank thread, is mounted within a recessed housing.

3.6.2.5 ***Sidewall Sprinkler.*** A sprinkler having special deflectors that are designed to discharge most of the water away from the nearby wall in a pattern resembling one-quarter of a sphere, with a small portion of the discharge directed at the wall behind the sprinkler.

3.6.2.6 ***Upright Sprinkler.*** A sprinkler designed to be installed in such a way that the water spray is directed upwards against the deflector.

3.6.3 Special Service Conditions. The following sprinklers are defined according to special application or environment.

3.6.3.1 ***Corrosion-Resistant Sprinkler.*** A sprinkler fabricated with corrosion-resistant material, or with special coatings or platings, to be used in an atmosphere that would normally corrode sprinklers.

3.6.3.2* ***Dry Sprinkler.*** A sprinkler secured in an extension nipple that has a seal at the inlet end to prevent water from entering the nipple until the sprinkler operates.

3.6.3.3 ***Institutional Sprinkler.*** A sprinkler specially designed for resistance to load-bearing purposes and with components not readily converted for use as weapons.

Copyright 2014 National Fire Protection Association (NFPA). Licensed, by agreement, for individual use and download on October 4, 2014 to LEADER and READER for designated user PATTARAPORN SRITRAKOOL. No other reproduction or transmission in any form permitted without written permission of NFPA. For inquires or to report unauthorized use, contact licensing@nfpa.org.

3.6.3.4 ***Intermediate Level Sprinkler/Rack Storage Sprinkler.*** A sprinkler equipped with integral shields to protect its operating elements from the discharge of sprinklers installed at higher elevations.

3.6.3.5 ***Ornamental/Decorative Sprinkler.*** A sprinkler that has been painted or plated by the manufacturer.

3.6.3.6 ***Pilot Line Detector.*** A standard spray sprinkler or thermostatic fixed-temperature release device used as a detector to pneumatically or hydraulically release the main valve, controlling the flow of water into a fire protection system.

3.6.4 Sprinkler Types. The following sprinklers are defined according to design and performance characteristics.

3.6.4.1* ***Control Mode Specific Application (CMSA) Sprinkler.*** A type of spray sprinkler that is capable of producing characteristic large water droplets and that is listed for its capability to provide fire control of specific high-challenge fire hazards.

3.6.4.2* ***Early Suppression Fast-Response (ESFR) Sprinkler.*** A type of fast-response sprinkler that has a thermal element with an RTI of 50 $(\text{meters-seconds})^{1/2}$ or less and is listed for its capability to provide fire suppression of specific high-challenge fire hazards.

3.6.4.3 ***Extended Coverage Sprinkler.*** A type of spray sprinkler with maximum coverage areas as specified in Sections 8.8 and 8.9 of this standard.

3.6.4.4 ***Nozzles.*** A device for use in applications requiring special water discharge patterns, directional spray, or other unusual discharge characteristics.

3.6.4.5 ***Old-Style/Conventional Sprinkler.*** A sprinkler that directs from 40 percent to 60 percent of the total water initially in a downward direction and that is designed to be installed with the deflector either upright or pendent.

3.6.4.6 ***Open Sprinkler.*** A sprinkler that does not have actuators or heat-responsive elements.

3.6.4.7* ***Quick-Response (QR) Sprinkler.*** A type of spray sprinkler that has a thermal element with an RTI of 50 $(\text{meter-seconds})^{1/2}$ or less and is listed as a quick-response sprinkler for its intended use.

3.6.4.7.1* ***Quick-Response Early Suppression (QRES) Sprinkler.*** A type of quick-response sprinkler that has a thermal element with an RTI of 50 $(\text{meter-seconds})^{1/2}$ or less and is listed for its capability to provide fire suppression of specific fire hazards.

3.6.4.7.2 ***Quick-Response Extended Coverage Sprinkler.*** A type of quick-response sprinkler that has a thermal element with an RTI of 50 $(\text{meter-seconds})^{1/2}$ or less and complies with the extended protection areas defined in Chapter 8.

3.6.4.8 ***Residential Sprinkler.*** A type of fast-response sprinkler having a thermal element with an RTI of 50 $(\text{meters-seconds})^{1/2}$ or less, that has been specifically investigated for its ability to enhance survivability in the room of fire origin, and that is listed for use in the protection of dwelling units.

3.6.4.9 ***Special Sprinkler.*** A sprinkler that has been tested and listed as prescribed in 8.4.8.

3.6.4.10 ***Spray Sprinkler.*** A type of sprinkler listed for its capability to provide fire control for a wide range of fire hazards.

3.6.4.10.1 ***Standard Spray Sprinkler.*** A spray sprinkler with maximum coverage areas as specified in Sections 8.6 and 8.7 of this standard.

3.7 Construction Definitions.

3.7.1* Obstructed Construction. Panel construction and other construction where beams, trusses, or other members impede heat flow or water distribution in a manner that materially affects the ability of sprinklers to control or suppress a fire.

3.7.2* Unobstructed Construction. Construction where beams, trusses, or other members do not impede heat flow or water distribution in a manner that materially affects the ability of sprinklers to control or suppress a fire. Unobstructed construction has horizontal structural members that are not solid, where the openings are at least 70 percent of the cross-section area and the depth of the member does not exceed the least dimension of the openings, or all construction types where the spacing of structural members exceeds 7½ ft (2.3 m) on center.

3.8 Private Water Supply Piping Definitions.

3.8.1 General Definitions from NFPA 24.

3.8.1.1 ***Appurtenance.*** An accessory or attachment that enables the private fire service main to perform its intended function. [**24,** 2013]

3.8.1.2 ***Corrosion-Resistant Piping.*** Piping that has the property of being able to withstand deterioration of its surface or its properties when exposed to its environment. [**24,** 2013]

3.8.1.3 ***Corrosion-Retardant Material.*** A lining or coating material that when applied to piping or appurtenances has the property of reducing or slowing the deterioration of the object's surface or properties when exposed to its environment. [**24,** 2013]

3.8.1.4 ***Fire Department Connection.*** A connection through which the fire department can pump supplemental water into the sprinkler system, standpipe, or other system, furnishing water for fire extinguishment to supplement existing water supplies. [**24,** 2013]

3.8.1.5 ***Fire Pump.*** A pump that is a provider of liquid flow and pressure dedicated to fire protection. [**20,** 2013]

3.8.1.6 ***Hose House.*** An enclosure located over or adjacent to a hydrant or other water supply designed to contain the necessary hose nozzles, hose wrenches, gaskets, and spanners to be used in fire fighting in conjunction with and to provide aid to the local fire department. [**24,** 2013]

3.8.1.7 ***Hydrant Butt.*** The hose connection outlet of a hydrant. [**24,** 2013]

3.8.1.8 ***Hydraulically Calculated Water Demand Flow Rate.*** The waterflow rate for a system or hose stream that has been calculated using accepted engineering practices. [**24,** 2013]

3.8.1.9 ***Pressure.***

3.8.1.9.1 ***Residual Pressure.*** The pressure that exists in the distribution system, measured at the residual hydrant at the time the flow readings are taken at the flow hydrants. [**24,** 2013]

3.8.1.9.2 ***Static Pressure.*** The pressure that exists at a given point under normal distribution system conditions measured at the residual hydrant with no hydrants flowing. [**24,** 2013]

Copyright 2014 National Fire Protection Association (NFPA). Licensed, by agreement, for individual use and download on October 4, 2014 to LEADER and READER for designated user PATTARAPORN SRITRAKOOL. No other reproduction or transmission in any form permitted without written permission of NFPA. For inquires or to report unauthorized use, contact licensing@nfpa.org.

3.8.1.10 ***Pressure Regulating Device.*** A device designed for the purpose of reducing, regulating, controlling, or restricting water pressure. [**24,** 2013]

3.8.1.11* ***Private Fire Service Main.*** Private fire service main, as used in this standard, is that pipe and its appurtenances on private property (1) between a source of water and the base of the system riser for water-based fire protection systems, (2) between a source of water and inlets to foam-making systems, (3) between a source of water and the base elbow of private hydrants or monitor nozzles, and (4) used as fire pump suction and discharge piping, (5) beginning at the inlet side of the check valve on a gravity or pressure tank. [**24,** 2013]

3.8.1.12 ***Pumper Outlet.*** The hydrant outlet intended for use by fire departments for taking supply from the hydrant for pumpers. [**24,** 2013]

3.8.1.13 ***Rated Capacity.*** The flow available from a hydrant at the designated residual pressure (rated pressure) either measured or calculated. [**24,** 2013]

3.8.1.14 ***Test.***

3.8.1.14.1 ***Flow Test.*** A test performed by the flow and measurement of water from one hydrant and the static and residual pressures from an adjacent hydrant for the purpose of determining the available water supply at that location. [**24,** 2013]

3.8.1.14.2 ***Flushing Test.*** A test of a piping system using high velocity flows to remove debris from the piping system prior to it being placed in service. [**24,** 2013]

3.8.1.14.3 ***Hydrostatic Test.*** A test of a closed piping system and its attached appurtenances consisting of subjecting the piping to an increased internal pressure for a specified period of duration to verify system integrity and leak rates. [**24,** 2013]

3.8.1.15 ***Valve.***

3.8.1.15.1 ***Check Valve.*** A valve that allows flow in one direction only. [**24,** 2013]

3.8.1.15.2 ***Indicating Valve.*** A valve that has components that show if the valve is open or closed. Examples are outside screw and yoke (OS&Y) gate valves and underground gate valves with indicator posts. [**24,** 2013]

3.8.2 Hydrant Definitions from NFPA 24.

3.8.2.1 ***Hydrant.*** An exterior valved connection to a water supply system that provides hose connections. [**24,** 2013]

3.8.2.1.1 ***Dry Barrel Hydrant.*** This is the most common type of hydrant; it has a control valve below the frost line between the footpiece and the barrel. [**24,** 2013]

3.8.2.1.2 ***Flow Hydrant.*** The hydrant that is used for the flow and flow measurement of water during a flow test. [**24,** 2013]

3.8.2.1.3 ***Private Fire Hydrant.*** A valved connection on a water supply system having one or more outlets and that is used to supply hose and fire department pumpers with water on private property. [**24,** 2013]

3.8.2.1.4 ***Public Hydrant.*** A valved connection on a water supply system having one or more outlets and that is used to supply hose and fire department pumpers with water. [**24,** 2013]

3.8.2.1.5 ***Residual Hydrant.*** The hydrant that is used for measuring static and residual pressures during a flow test. [**24,** 2013]

3.8.2.1.6 ***Wet Barrel Hydrant.*** A type of hydrant that sometimes is used where there is no danger of freezing weather. Each outlet on a wet barrel hydrant is provided with a valved outlet threaded for fire hose. [**24,** 2013]

3.9 Storage Definitions.

3.9.1* General.

3.9.1.1* ***Available Height for Storage.*** The maximum height at which commodities can be stored above the floor and still maintain necessary clearance from structural members and the required clearance below sprinklers.

3.9.1.2 ***Cartoned.*** A method of storage consisting of corrugated cardboard or paperboard containers fully enclosing the commodity.

3.9.1.3* ***Carton Records Storage.*** A Class III commodity consisting predominantly of paper records in cardboard cartons.

3.9.1.4 ***Catwalk.*** For the purposes of carton records storage, a storage aid consisting of either open metal grating or solid horizontal barriers supported from a rack storage system that is utilized as a walkway for access to storage at elevated levels. Catwalks are accessed using stairs and are not separate floors of a building.

3.9.1.5 ***Clearance to Ceiling.*** The distance from the top of storage to the ceiling above.

3.9.1.6 ***Commodity.*** The combination of products, packing material, and container that determines commodity classification.

3.9.1.7 ***Compact Storage.*** Storage on solid shelves not exceeding 36 in. (0.9 m) in total depth, arranged as part of a compact storage module, with no more than 30 in. (0.76 m) between shelves vertically and with no internal vertical flue spaces other than those between individual shelving sections.

3.9.1.8 ***Compact Storage Module.*** A type of shelving unit consisting of compact storage whereby the units move to allow for storage to be pushed together creating a storage unit with no flues or minimal spaces between units. Aisles are created by moving the shelving unit. Compact storage modules can be manual or electric in operation.

3.9.1.9* ***Compartmented.*** The rigid separation of the products in a container by dividers that form a stable unit under fire conditions.

3.9.1.10* ***Container (Shipping, Master, or Outer Container).*** A receptacle strong enough, by reason of material, design, and construction, to be shipped safely without further packaging.

3.9.1.11* ***Conventional Pallets.*** A material-handling aid designed to support a unit load with openings to provide access for material-handling devices. *(See Figure A.3.9.1.11.)*

3.9.1.12* ***Encapsulation.*** A method of packaging that either consists of a plastic sheet completely enclosing the sides and top of a pallet load containing a combustible commodity, a combustible package, or a group of combustible commodities or combustible packages, or consists of combustible commodities individually wrapped in plastic sheeting and stored exposed in a pallet load.

Copyright 2014 National Fire Protection Association (NFPA). Licensed, by agreement, for individual use and download on October 4, 2014 to LEADER and READER for designated user PATTARAPORN SRITRAKOOL. No other reproduction or transmission in any form permitted without written permission of NFPA. For inquires or to report unauthorized use, contact licensing@nfpa.org.

3.9.1.13 ***Expanded (Foamed or Cellular) Plastics.*** Those plastics, the density of which is reduced by the presence of numerous small cavities (cells), interconnecting or not, dispersed throughout their mass.

3.9.1.14 ***Exposed Group A Plastic Commodities.*** Those plastics not in packaging or coverings that absorb water or otherwise appreciably retard the burning hazard of the commodity. (Paper wrapped or encapsulated, or both, should be considered exposed.)

3.9.1.15 ***Free-Flowing Plastic Materials.*** Those plastics that fall out of their containers during a fire, fill flue spaces, and create a smothering effect on the fire. Examples include powder, pellets, flakes, or random-packed small objects [e.g., razor blade dispensers, 1 oz to 2 oz (28 g to 57 g) bottles].

3.9.1.16 ***High-Challenge Fire Hazard.*** A fire hazard typical of that produced by fires in combustible high-piled storage.

3.9.1.17 ***High-Piled Storage.*** Solid-piled, palletized, rack storage, bin box, and shelf storage in excess of 12 ft (3.7 m) in height.

3.9.1.18* ***Miscellaneous Storage.*** Storage that does not exceed 12 ft (3.66 m) in height, is incidental to another occupancy use group, does not constitute more than 10 percent of the building area or 4000 ft^2 (372 m^2) of the sprinklered area, whichever is greater, does not exceed 1000 ft^2 (93 m^2) in one pile or area, and is separated from other storage areas by at least 25 ft (7.62 m).

3.9.1.19* ***Open-Top Container.*** A container of any shape that is entirely or partially open on the top and arranged so as to allow for the collection of discharging sprinkler water cascading through the storage array.

3.9.1.20 ***Packaging.*** A commodity wrapping, cushioning, or container.

3.9.1.21 ***Plastic Pallet.*** A pallet having any portion of its construction consisting of a plastic material.

3.9.1.22* ***Reinforced Plastic Pallet.*** A plastic pallet incorporating a secondary reinforcing material (such as steel or fiberglass) within the pallet.

3.9.1.23 ***Roof Height.*** The distance between the floor and the underside of the roof deck within the storage area.

3.9.1.24 ***Slave Pallet.*** A special pallet captive to a material-handling system. *(See Figure A.3.9.1.11.)*

3.9.1.25 ***Storage Aids.*** Commodity storage devices, such as pallets, dunnage, separators, and skids.

3.9.1.26 ***Unit Load.*** A pallet load or module held together in some manner and normally transported by material-handling equipment.

3.9.1.27 ***Wood Pallet.*** A pallet constructed entirely of wood with metal fasteners.

3.9.2 Palletized, Solid-Piled, Bin Box, and Shelf Storage.

3.9.2.1 ***Array.***

3.9.2.1.1 ***Closed Array.*** A storage arrangement where air movement through the pile is restricted because of 6 in. (152 mm) or less vertical flues.

3.9.2.1.2* ***Open Array.*** A storage arrangement where air movement through the pile is enhanced because of vertical flues larger than 6 in. (152 mm).

3.9.2.2 ***Bin Box Storage.*** Storage in five-sided wood, metal, or cardboard boxes with open face on the aisles in which boxes are self-supporting or supported by a structure so designed that little or no horizontal or vertical space exists around boxes.

3.9.2.3 ***Palletized Storage.*** Storage of commodities on pallets or other storage aids that form horizontal spaces between tiers of storage.

3.9.2.4* ***Pile Stability, Stable Piles.*** Those arrays where collapse, spillage of content, or leaning of stacks across flue spaces is not likely to occur soon after initial fire development.

3.9.2.5* ***Pile Stability, Unstable Piles.*** Those arrays where collapse, spillage of contents, or leaning of stacks across flue spaces occurs soon after initial fire development.

3.9.2.6* ***Shelf Storage.*** Storage on structures up to and including 30 in. (0.76 m) deep and separated by aisles at least 30 in. (0.76 m) wide.

3.9.2.6.1* ***Back-to-Back Shelf Storage.*** Two solid or perforated shelves up to 30 in. (0.76 m) in depth each, not exceeding a total depth of 60 in. (1.52 m), separated by a longitudinal vertical barrier such as plywood, particleboard, sheet metal, or equivalent, with a maximum 0.25 in. (6.4 mm) diameter penetrations and no longitudinal flue space and a maximum storage height of 15 ft (4.57 m).

3.9.2.7 ***Solid-Piled Storage.*** Storage of commodities stacked on each other.

3.9.2.8 ***Solid Unit Load of Nonexpanded Plastic (Either Cartoned or Exposed).*** A load that does not have voids (air) within the load and that burns only on the exterior of the load; water from sprinklers might reach most surfaces available to burn.

3.9.3 Rack Storage.

3.9.3.1* ***Aisle Width.*** The horizontal dimension between the face of the loads in racks under consideration.

3.9.3.2 ***Automotive Components on Portable Racks.*** Automotive components on portable racks are defined as the following: instrument panels, windshields, metal and plastic gasoline tanks, heater housings, door panels, interior trim, bumper facia, wiring harnesses, sheet metal, body components, engines, driveline components, steering mechanisms, auxiliary motors, and lighting — all with or without expanded plastic donnage. This definition does not include the storage of air bags, tires, and seats on portable racks.

3.9.3.3 ***Bulkhead.*** A vertical barrier across the rack.

3.9.3.4* ***Face Sprinklers.*** Standard sprinklers that are located in transverse flue spaces along the aisle or in the rack, are within 18 in. (0.46 m) of the aisle face of storage, and are used to oppose vertical development of fire on the external face of storage.

3.9.3.5 ***Horizontal Barrier.*** A solid barrier in the horizontal position covering the entire rack, including all flue spaces at certain height increments, to prevent vertical fire spread.

3.9.3.6* ***Longitudinal Flue Space.*** The space between rows of storage perpendicular to the direction of loading with a width not exceeding 24 in. (610 mm) between storage.

Copyright 2014 National Fire Protection Association (NFPA). Licensed, by agreement, for individual use and download on October 4, 2014 to LEADER and READER for designated user PATTARAPORN SRITRAKOOL. No other reproduction or transmission in any form permitted without written permission of NFPA. For inquires or to report unauthorized use, contact licensing@nfpa.org.

3.9.3.7* ***Rack.*** Any combination of vertical, horizontal, and diagonal members that supports stored materials. [**1,** 2012]

3.9.3.7.1 ***Double-Row Racks.*** Racks less than or equal to 12 ft (3.7 m) in depth or single-row racks placed back to back having an aggregate depth up to 12 ft (3.7 m), with aisles having an aisle width of at least 3.5 ft (1.1 m) between loads on racks.

3.9.3.7.2 ***Movable Racks.*** Racks on fixed rails or guides that can be moved back and forth only in a horizontal, two-dimensional plane. A moving aisle is created as abutting racks are either loaded or unloaded, then moved across the aisle to abut other racks.

3.9.3.7.3 ***Multiple-Row Racks.*** Racks greater than 12 ft (3.7 m) in depth or single- or double-row racks separated by aisles less than 3.5 ft (1.1 m) wide having an overall width greater than 12 ft (3.7 m).

3.9.3.7.4 ***Portable Racks.*** Racks that are not fixed in place and can be arranged in any number of configurations.

3.9.3.7.5 ***Single-Row Racks.*** Racks that have no longitudinal flue space and that have a depth up to 6 ft (1.8 m) with aisles having a width of at least 3.5 ft (1.1 m) between loads on racks.

3.9.3.7.6 ***Rack Shelf Area.*** The area of the horizontal surface of a shelf in a rack defined by perimeter aisle(s) or nominal 6 in. (152 mm) flue spaces on all four sides, or by the placement of loads that block openings that would otherwise serve as the required flue spaces.

3.9.3.7.7 ***Open Rack.*** Racks without shelving or with shelving in racks that are fixed in place with shelves having a solid surface and a shelf area equal to or less than 20 ft^2 (1.9 m^2) or with shelves having a wire mesh, slatted surface, or other material with openings representing at least 50 percent of the shelf area including the horizontal area of rack members and where the flue spaces are maintained.

3.9.3.7.8 ***Slatted Shelf Rack.*** A rack where shelves are fixed in place with a series of narrow individual solid supports used as the shelf material and spaced apart with regular openings.

3.9.3.7.9 ***Solid Shelf Rack.*** A rack where shelves are fixed in place with a solid, slatted, or wire mesh barrier used as the shelf material and having limited openings in the shelf area.

3.9.3.8 ***Solid Shelving.*** Shelving that is fixed in place, slatted, wire mesh, or other type of shelves located within racks. The area of a solid shelf is defined by perimeter aisle or flue space on all four sides. Solid shelves having an area equal to or less than 20 ft^2 (1.9 m^2) are defined as open racks. Shelves of wire mesh, slats, or other materials more than 50 percent open and where the flue spaces are maintained are defined as open racks.

3.9.3.9 ***Transverse Flue Space.*** The space between rows of storage parallel to the direction of loading. *(See Figure A.3.9.3.6.)*

3.9.4 Rubber Tire Storage Definitions.

3.9.4.1 ***Banded Tires.*** A storage method in which a number of tires are strapped together.

3.9.4.2 ***Horizontal Channel.*** Any uninterrupted space in excess of 5 ft (1.5 m) in length between horizontal layers of stored tires. Such channels can be formed by pallets, shelving, racks, or other storage arrangements.

3.9.4.3 ***Laced Tire Storage.*** Tires stored where the sides of the tires overlap, creating a woven or laced appearance. *[See Figure A.3.9.4.9(g).]*

3.9.4.4* ***Miscellaneous Tire Storage.*** The storage of rubber tires that is incidental to the main use of the building; storage areas do not exceed 2000 ft^2 (186 m^2), and on-tread storage piles, regardless of storage method, do not exceed 25 ft (7.6 m) in the direction of the wheel holes. Acceptable storage arrangements include (a) on-floor, on-side storage up to 12 ft (3.7 m) high; (b) on-floor, on-tread storage up to 5 ft (1.5 m) high; (c) double-row or multirow fixed or portable rack storage on-side or on-tread up to 5 ft (1.5 m) high; (d) single-row fixed or portable rack storage on-side or on-tread up to 12 ft (3.7 m) high; and (e) laced tires in racks up to 5 ft (1.5 m) in height.

3.9.4.5 ***On-Side Tire Storage.*** Tires stored horizontally or flat.

3.9.4.6 ***On-Tread Tire Storage.*** Tires stored vertically or on their treads.

3.9.4.7 ***Palletized Tire Storage.*** Storage on portable racks of various types utilizing a conventional pallet as a base.

3.9.4.8 ***Pyramid Tire Storage.*** On-floor storage in which tires are formed into a pyramid to provide pile stability.

3.9.4.9* ***Rubber Tire Rack Illustrations.*** See Figure A.3.9.4.9(a) through Figure A.3.9.4.9(g).

3.9.4.10 ***Rubber Tires.*** Pneumatic tires for passenger automobiles, aircraft, light and heavy trucks, trailers, farm equipment, construction equipment (off-the-road), and buses.

3.9.5 Roll Paper Definitions.

3.9.5.1 ***Array (Paper).***

3.9.5.1.1 ***Closed Array (Paper).*** A vertical storage arrangement in which the distances between columns in both directions are short [not more than 2 in. (50 mm) in one direction and 1 in. (25 mm) in the other].

3.9.5.1.2 ***Open Array (Paper).*** A vertical storage arrangement in which the distance between columns in both directions is lengthy (all vertical arrays other than closed or standard).

3.9.5.1.3* ***Standard Array (Paper).*** A vertical storage arrangement in which the distance between columns in one direction is short [1 in. (25 mm) or less] and is in excess of 2 in. (50 mm) in the other direction.

3.9.5.2 ***Banded Roll Paper Storage.*** Rolls provided with a circumferential steel strap [⅜ in. (9.5 mm) or wider] at each end of the roll.

3.9.5.3 ***Column.*** A single vertical stack of rolls.

3.9.5.4 ***Core.*** The central tube around which paper is wound to form a roll.

3.9.5.5 ***Paper (General Term).*** The term for all kinds of felted sheets made from natural fibrous materials, usually vegetable but sometimes mineral or animal, and formed on a fine wire screen from water suspension.

Copyright 2014 National Fire Protection Association (NFPA). Licensed, by agreement, for individual use and download on October 4, 2014 to LEADER and READER for designated user PATTARAPORN SRITRAKOOL. No other reproduction or transmission in any form permitted without written permission of NFPA. For inquires or to report unauthorized use, contact licensing@nfpa.org.

3.9.5.6 ***Roll Paper Storage.***

3.9.5.6.1 ***Horizontal Roll Paper Storage.*** Rolls stored with the cores in the horizontal plane (on-side storage).

3.9.5.6.2 ***Vertical Roll Paper Storage.*** Rolls stored with the cores in the vertical plane (on-end storage).

3.9.5.6.3* ***Wrapped Roll Paper Storage.*** Rolls provided with a complete heavy kraft covering around both sides and ends.

3.9.5.7* ***Roll Paper Storage Height.*** The maximum vertical distance above the floor at which roll paper is normally stored.

3.9.6 Baled Cotton Definitions.

3.9.6.1* ***Baled Cotton.*** A natural seed fiber wrapped and secured in industry-accepted materials, usually consisting of burlap, woven polypropylene, or sheet polyethylene, and secured with steel, synthetic or wire bands, or wire; also includes linters (lint removed from the cottonseed) and motes (residual materials from the ginning process). *(See Table A.3.9.6.1.)*

3.9.6.2* ***Tiered Storage.*** An arrangement in which bales are stored directly on the floor, two or more bales high.

3.10 Marine Definitions. These definitions apply to Chapter 26 only.

3.10.1 A-Class Boundary. A boundary designed to resist the passage of smoke and flame for 1 hour when tested in accordance with ASTM E 119, *Standard Test Methods for Fire Tests of Building Construction and Materials.*

3.10.2 B-Class Boundary. A boundary designed to resist the passage of flame for ½ hour when tested in accordance with ASTM E 119, *Standard Test Methods for Fire Tests of Building Construction and Materials.*

3.10.3 Central Safety Station. A continuously manned control station from which all of the fire control equipment is monitored. If this station is not the bridge, direct communication with the bridge must be provided by means other than the ship's service telephone.

3.10.4* Heat-Sensitive Material. A material whose melting point is below 1700°F (926.7°C).

3.10.5 Heel. The inclination of a ship to one side.

3.10.6 Heel Angle. The angle defined by the intersection of a vertical line through the center of a vessel and a line perpendicular to the surface of the water.

3.10.7* International Shore Connection. A universal connection to the vessel's fire main to which a shoreside fire-fighting water supply can be connected.

3.10.8* Marine System. A sprinkler system installed on a ship, boat, or other floating structure that takes its supply from the water on which the vessel floats.

3.10.9* Marine Thermal Barrier. An assembly that is constructed of noncombustible materials and made intact with the main structure of the vessel, such as shell, structural bulkheads, and decks; meets the requirements of a B-Class boundary; and is insulated such that, if tested in accordance with ASTM E 119, *Standard Test Methods for Fire Tests of Building Construction and Materials*, for 15 minutes, the average temperature of the unexposed side does not rise more than 250°F (193°C) above the original temperature, nor does the temperature at any one point, including any joint, rise more than 405°F (225°C) above the original temperature.

3.10.10 Marine Water Supply. The supply portion of the sprinkler system from the water pressure tank or the sea suction of the designated sprinkler system pump up to and including the valve that isolates the sprinkler system from these two water sources.

3.10.11 Supervision. A visual and audible alarm signal given at the central safety station to indicate when the system is in operation or when a condition that would impair the satisfactory operation of the system exists. Supervisory alarms must give a distinct indication for each individual system component that is monitored.

3.10.12 Survival Angle. The maximum angle to which a vessel is permitted to heel after the assumed damage required by stability regulations is imposed.

3.10.13 Type 1 Stair. A fully enclosed stair that serves all levels of a vessel in which persons can be employed.

3.11 Hanging and Bracing Definitions.

3.11.1 C_p**.** The seismic coefficient that combines ground motion and seismic response factors from SEI/ASCE 7, *Minimum Design Loads of Buildings and Other Structures.*

3.11.2 F_{pw}**.** The horizontal force due to seismic load acting on a brace at working stress levels.

3.11.3* Four-Way Bracing. Adjacent sway braces or a sway brace assembly intended to resist differential movement of the system piping in all horizontal directions.

3.11.4 Hanger. A device or assembly used to support the gravity load of the system piping.

3.11.5 Lateral Brace. A sway brace intended to resist differential movement perpendicular to the axis of the system piping.

3.11.6 Longitudinal Brace. A sway brace intended to resist differential movement parallel to the axis of the system piping.

3.11.7 Net Vertical Force. The vertical reaction due to the angle of installation of sway braces on system piping resulting from earthquake motion.

3.11.8* Post-Installed Anchors. A device used for fastening pipe to the building structure, installed in hardened concrete.

3.11.9 S_s**.** The maximum considered earthquake ground motion for 0.2-second spectral response acceleration (5 percent of critical damping), site Class B for a specific site.

3.11.10* Seismic Separation Assembly. An assembly of fittings, pipe, flexible pipe, and/or couplings that permits movement in all directions to accommodate seismic differential movement across building seismic separation joints.

3.11.11 Sway Brace. An assembly intended to be attached to the system piping to resist horizontal earthquake loads in two directions.

Chapter 4 General Requirements

4.1 Level of Protection. A building, where protected by an automatic sprinkler system installation, shall be provided with sprinklers in all areas except where specific sections of this standard permit the omission of sprinklers.

Copyright 2014 National Fire Protection Association (NFPA). Licensed, by agreement, for individual use and download on October 4, 2014 to LEADER and READER for designated user PATTARAPORN SRITRAKOOL. No other reproduction or transmission in any form permitted without written permission of NFPA. For inquires or to report unauthorized use, contact licensing@nfpa.org.

4.2 Limited Area Systems.

4.2.1 When partial sprinkler systems are installed, the requirements of this standard shall be used insofar as they are applicable.

4.2.2 The authority having jurisdiction shall be consulted in each case.

4.3* Owner's Certificate. The owner(s) of a building or structure where the fire sprinkler system is going to be installed or their authorized agent shall provide the sprinkler system installer with the following information prior to the layout and detailing of the fire sprinkler system *[see Figure A.23.1(b)]*:

(1) Intended use of the building including the materials within the building and the maximum height of any storage
(2) A preliminary plan of the building or structure along with the design concepts necessary to perform the layout and detail for the fire sprinkler system
(3)* Any special knowledge of the water supply, including known environmental conditions that might be responsible for corrosion, including microbiologically influenced corrosion (MIC)

4.4* Additives. Additives or chemicals intended to stop leaks, such as sodium silicate or derivatives of sodium silicate, brine, or similar acting chemicals, shall not be used in sprinkler systems.

4.5 Air, Nitrogen, or Other Approved Gas. Where air is used to charge, maintain, or supervise sprinkler systems, nitrogen or other approved gas shall also be permitted to be used.

4.6* Support of Nonsprinkler System Components. Sprinkler system components shall not be used to support nonsprinkler system components unless expressly permitted by this standard.

Chapter 5 Classification of Occupancies and Commodities

5.1* Classification of Occupancies.

5.1.1 Occupancy classifications for this standard shall relate to sprinkler design, installation, and water supply requirements only.

5.1.2 Occupancy classifications shall not be intended to be a general classification of occupancy hazards.

5.2* Light Hazard Occupancies. Light hazard occupancies shall be defined as occupancies or portions of other occupancies where the quantity and/or combustibility of contents is low and fires with relatively low rates of heat release are expected.

5.3* Ordinary Hazard Occupancies.

5.3.1* Ordinary Hazard (Group 1).

5.3.1.1 Ordinary hazard (Group 1) occupancies shall be defined as occupancies or portions of other occupancies where combustibility is low, quantity of combustibles is moderate, stockpiles of combustibles do not exceed 8 ft (2.4 m), and fires with moderate rates of heat release are expected.

5.3.1.2 Dedicated and miscellaneous storage shall be protected in accordance with Chapter 12 and Chapter 13 as applicable.

5.3.2* Ordinary Hazard (Group 2).

5.3.2.1 Ordinary hazard (Group 2) occupancies shall be defined as occupancies or portions of other occupancies where the quantity and combustibility of contents are moderate to high, stockpiles of contents with moderate rates of heat release do not exceed 12 ft (3.66 m), and stockpiles of contents with high rates of heat release do not exceed 8 ft (2.4 m).

5.3.2.2 Dedicated and miscellaneous storage shall be protected in accordance with Chapter 12 and Chapter 13 as applicable.

5.4 Extra Hazard Occupancies.

5.4.1* Extra Hazard (Group 1). Extra hazard (Group 1) occupancies shall be defined as occupancies or portions of other occupancies where the quantity and combustibility of contents are very high and dust, lint, or other materials are present, introducing the probability of rapidly developing fires with high rates of heat release but with little or no combustible or flammable liquids.

5.4.2* Extra Hazard (Group 2). Extra hazard (Group 2) occupancies shall be defined as occupancies or portions of other occupancies with moderate to substantial amounts of flammable or combustible liquids or occupancies where shielding of combustibles is extensive.

5.5* Special Occupancy Hazards.

5.6* Commodity Classification. See Section C.2.

5.6.1 General.

5.6.1.1* Classification of Commodities.

5.6.1.1.1 Commodity classification and the corresponding protection requirements shall be determined based on the makeup of individual storage units (i.e., unit load, pallet load).

5.6.1.1.2 When specific test data of commodity classification by a nationally recognized testing agency are available, the data shall be permitted to be used in determining classification of commodities.

5.6.1.2 Mixed Commodities.

5.6.1.2.1 Protection requirements shall not be based on the overall commodity mix in a fire area.

5.6.1.2.2 Unless the requirements of 5.6.1.2.3 or 5.6.1.2.4 are met, mixed commodity storage shall be protected by the requirements for the highest classified commodity and storage arrangement.

5.6.1.2.3 The protection requirements for the lower commodity class shall be permitted to be utilized where all of the following are met:

(1) Up to 10 pallet loads of a higher hazard commodity, as described in 5.6.3 and 5.6.4, shall be permitted to be present in an area not exceeding 40,000 ft^2 (3716 m^2).
(2) The higher hazard commodity shall be randomly dispersed with no adjacent loads in any direction (including diagonally).
(3) Where the ceiling protection is based on Class I or Class II commodities, the allowable number of pallet loads for Class IV or Group A plastics shall be reduced to five.

5.6.1.2.4 Mixed Commodity Segregation. The protection requirements for the lower commodity class shall be permitted to be utilized in the area of lower commodity class, where the higher hazard material is confined to a designated area and the area is protected to the higher hazard in accordance with the requirements of this standard.

5.6.2 Pallet Types.

5.6.2.1 General. When loads are palletized, the use of wood or metal pallets, or listed pallets equivalent to wood, shall be assumed in the classification of commodities.

Copyright 2014 National Fire Protection Association (NFPA). Licensed, by agreement, for individual use and download on October 4, 2014 to LEADER and READER for designated user PATTARAPORN SRITRAKOOL. No other reproduction or transmission in any form permitted without written permission of NFPA. For inquires or to report unauthorized use, contact licensing@nfpa.org.

5.6.2.2* Unreinforced Plastic Pallets. For Class I through Class IV commodities, when unreinforced polypropylene or unreinforced high-density polyethylene plastic pallets are used, the classification of the commodity unit shall be increased one class.

5.6.2.2.1 Unreinforced polypropylene or unreinforced high-density polyethylene plastic pallets shall be marked with a permanent symbol to indicate that the pallet is unreinforced.

5.6.2.3* For Class I through Class IV commodities, when reinforced polypropylene or reinforced high-density polyethylene plastic pallets are used, the classification of the commodity unit shall be increased two classes except for Class IV commodity, which shall be increased to a cartoned unexpanded Group A plastic commodity.

5.6.2.3.1 Pallets shall be assumed to be reinforced if no permanent marking or manufacturer's certification of nonreinforcement is provided.

5.6.2.4 No increase in the commodity classification shall be required for Group A plastic commodities stored on plastic pallets.

5.6.2.5 For ceiling-only sprinkler protection, the requirements of 5.6.2.2 and 5.6.2.3 shall not apply where plastic pallets are used and where the sprinkler system uses spray sprinklers with a minimum K-factor of K-16.8 (240).

5.6.2.6 The requirements of 5.6.2.2 through 5.6.2.7 shall not apply to nonwood pallets that have demonstrated a fire hazard that is equal to or less than wood pallets and are listed as such.

5.6.2.7 For Class I through Class IV commodities stored on plastic pallets when other than wood, metal, or polypropylene or high-density polyethylene plastic pallets are used, the classification of the commodity unit shall be determined by specific testing conducted by a national testing laboratory or shall be increased two classes.

5.6.3* Commodity Classes.

5.6.3.1* Class I. A Class I commodity shall be defined as a noncombustible product that meets one of the following criteria:

(1) Placed directly on wood pallets
(2) Placed in single-layer corrugated cartons, with or without single-thickness cardboard dividers, with or without pallets
(3) Shrink-wrapped or paper-wrapped as a unit load with or without pallets

5.6.3.2* Class II. A Class II commodity shall be defined as a noncombustible product that is in slatted wooden crates, solid wood boxes, multiple-layered corrugated cartons, or equivalent combustible packaging material, with or without pallets.

5.6.3.3* Class III.

5.6.3.3.1 A Class III commodity shall be defined as a product fashioned from wood, paper, natural fibers, or Group C plastics with or without cartons, boxes, or crates and with or without pallets.

5.6.3.3.2 A Class III commodity shall be permitted to contain a limited amount (5 percent by weight or volume or less) of Group A or Group B plastics.

5.6.3.4* Class IV.

5.6.3.4.1 A Class IV commodity shall be defined as a product, with or without pallets, that meets one of the following criteria:

(1) Constructed partially or totally of Group B plastics
(2) Consists of free-flowing Group A plastic materials
(3) Contains within itself or its packaging an appreciable amount (5 percent to 15 percent by weight or 5 percent to 25 percent by volume) of Group A plastics

5.6.3.4.2 The remaining materials shall be permitted to be metal, wood, paper, natural or synthetic fibers, or Group B or Group C plastics.

5.6.4* Classification of Plastics, Elastomers, and Rubber. Plastics, elastomers, and rubber shall be classified as Group A, Group B, or Group C.

5.6.4.1* Group A. The following materials shall be classified as Group A:

(1) ABS (acrylonitrile-butadiene-styrene copolymer)
(2) Acetal (polyformaldehyde)
(3) Acrylic (polymethyl methacrylate)
(4) Butyl rubber
(5) EPDM (ethylene-propylene rubber)
(6) FRP (fiberglass-reinforced polyester)
(7) Natural rubber (if expanded)
(8) Nitrile-rubber (acrylonitrile-butadiene-rubber)
(9) PET (thermoplastic polyester)
(10) Polybutadiene
(11) Polycarbonate
(12) Polyester elastomer
(13) Polyethylene
(14) Polypropylene
(15) Polystyrene
(16) Polyurethane
(17) PVC (polyvinyl chloride — highly plasticized, with plasticizer content greater than 20 percent) (rarely found)
(18) SAN (styrene acrylonitrile)
(19) SBR (styrene-butadiene rubber)

5.6.4.2 Group B. The following materials shall be classified as Group B:

(1) Cellulosics (cellulose acetate, cellulose acetate butyrate, ethyl cellulose)
(2) Chloroprene rubber
(3) Fluoroplastics (ECTFE — ethylene-chlorotrifluoro-ethylene copolymer; ETFE — ethylene-tetrafluoroethylene-copolymer; FEP — fluorinated ethylene-propylene copolymer)
(4) Natural rubber (not expanded)
(5) Nylon (nylon 6, nylon 6/6)
(6) Silicone rubber

5.6.4.3 Group C. The following materials shall be classified as Group C:

(1) Fluoroplastics (PCTFE — polychlorotrifluoroethylene; PTFE — polytetrafluoroethylene)
(2) Melamine (melamine formaldehyde)
(3) Phenolic
(4) PVC (polyvinyl chloride — flexible — PVCs with plasticizer content up to 20 percent)
(5) PVDC (polyvinylidene chloride)
(6) PVDF (polyvinylidene fluoride)
(7) PVF (polyvinyl fluoride)
(8) Urea (urea formaldehyde)

5.6.4.4 Group A plastics shall be further subdivided as either expanded or nonexpanded.

Copyright 2014 National Fire Protection Association (NFPA). Licensed, by agreement, for individual use and download on October 4, 2014 to LEADER and READER for designated user PATTARAPORN SRITRAKOOL. No other reproduction or transmission in any form permitted without written permission of NFPA. For inquires or to report unauthorized use, contact licensing@nfpa.org.

5.6.4.4.1 If a cartoned commodity is more than 40 percent (by volume) expanded plastic, it shall be protected as a cartoned expanded plastic.

5.6.4.4.2 Exposed commodities containing greater than 25 percent by volume expanded plastic shall be protected as an exposed expanded plastic.

5.6.5* Classification of Rolled Paper Storage. For the purposes of this standard, the classifications of paper described in 5.6.5.1 through 5.6.5.4 shall apply and shall be used to determine the sprinkler system design criteria.

5.6.5.1 Heavyweight Class. Heavyweight class shall be defined so as to include paperboard and paper stock having a basis weight [weight per 1000 ft^2 (92.9 m^2)] of 20 lb (9.1 kg).

5.6.5.2 Mediumweight Class. Mediumweight class shall be defined so as to include all the broad range of papers having a basis weight [weight per 1000 ft^2 (92.9 m^2)] of 10 lb to 20 lb (4.5 kg to 9.1 kg).

5.6.5.3 Lightweight Class. Lightweight class shall be defined so as to include all papers having a basis weight [weight per 1000 ft^2 (92.9 m^2)] of 10 lb (4.5 kg).

5.6.5.4 Tissue.

5.6.5.4.1 Tissue shall be defined so as to include the broad range of papers of characteristic gauzy texture, which, in some cases, are fairly transparent.

5.6.5.4.2 For the purposes of this standard, tissue shall be defined as the soft, absorbent type, regardless of basis weight — specifically, crepe wadding and the sanitary class including facial tissue, paper napkins, bathroom tissue, and toweling.

Chapter 6 was revised by a tentative interim amendment (TIA). See page 1.

Chapter 6 System Components and Hardware

6.1 General. This chapter shall provide requirements for correct use of sprinkler system components and hardware.

6.1.1* Listing.

6.1.1.1 Materials or devices not specifically designated by this standard shall be used in accordance with all conditions, requirements, and limitations of their special listing.

6.1.1.1.1 All special listing requirements shall be included and identified in the product submittal literature and installation instructions.

6.1.1.2 Unless the requirements of 6.1.1.3, 6.1.1.4, or 6.1.1.5 are met, all materials and devices essential to successful system operation shall be listed.

6.1.1.2.1 Valve components (including valve trim, internal parts, gaskets, and the like) shall not be required to be individually listed.

6.1.1.3 Equipment as permitted in Table 6.3.1.1 and Table 6.4.1 shall not be required to be listed.

6.1.1.3.1 Nonmetallic pipe and fittings included in Table 6.3.1.1 and Table 6.4.1 shall be listed.

6.1.1.4 Materials meeting the requirements of 9.1.1.2, 9.1.1.5.2, and 9.1.1.5.3 shall not be required to be listed.

6.1.1.5 Components that do not affect system performance such as drain piping, drain valves, and signs shall not be required to be listed.

6.1.1.6 The new materials or devices listing instructions shall identify and specify the existing system components, including the fluids conveyed, with which the new listed materials, devices, or components are compatible.

6.1.1.6.1 This listing requirement shall also apply to chemical or material modifications made to components listed in Table 6.3.1.1 and Table 6.4.1.

6.1.2 Reconditioned Components.

6.1.2.1 The use of reconditioned valves and devices as replacement equipment in existing systems shall be permitted.

6.1.2.2 Reconditioned sprinklers shall not be permitted to be utilized on any new or existing system.

6.1.3 Rated Pressure. System components shall be rated for the maximum system working pressure to which they are exposed but shall not be rated at less than 175 psi (12.1 bar) for components installed above ground and 150 psi (10.4 bar) for components installed underground.

6.2 Sprinklers.

6.2.1 General. Only new sprinklers shall be installed.

6.2.1.1 When a sprinkler has been removed for any reason, it shall not be reinstalled.

6.2.2* Sprinkler Identification. All sprinklers shall be permanently marked with one or two English uppercase alphabetic characters to identify the manufacturer, immediately followed by three or four numbers, to uniquely identify a sprinkler as to K-factor (orifice size) or orifice shape, deflector characteristic, pressure rating, and thermal sensitivity.

6.2.3 Sprinkler Discharge Characteristics.

6.2.3.1* General. Unless the requirements of 6.2.3.2, 6.2.3.3, or 6.2.3.4 are met, the K-factor, relative discharge, and marking identification for sprinklers having different K-factors shall be in accordance with Table 6.2.3.1.

6.2.3.2 Pipe Threads. Listed sprinklers having pipe threads different from those shown in Table 6.2.3.1 shall be permitted.

6.2.3.3 K-Factors Greater than K-28 (400). Sprinklers listed with nominal K-factors greater than K-28 (400) shall increase the flow by 100 percent increments when compared with a nominal K-5.6 (80) sprinkler.

6.2.3.4 Residential Sprinklers. Residential sprinklers shall be permitted with K-factors other than those specified in Table 6.2.3.1.

6.2.3.5 CMSA and ESFR K-Factors. Control mode specific application (CMSA) and early suppression fast-response (ESFR) sprinklers shall have a minimum nominal K-factor of K-11.2 (160).

6.2.3.6 ESFR K-Factor. ESFR sprinkler K-factor shall be selected as appropriate for the hazard. *(See Chapter 12.)*

6.2.4 Occupancy Limitations. Unless the requirements of 6.2.4.1 or 6.2.4.2 are met, sprinklers shall not be listed for protection of a portion of an occupancy classification.

Copyright 2014 National Fire Protection Association (NFPA). Licensed, by agreement, for individual use and download on October 4, 2014 to LEADER and READER for designated user PATTARAPORN SRITRAKOOL. No other reproduction or transmission in any form permitted without written permission of NFPA. For inquires or to report unauthorized use, contact licensing@nfpa.org.

6.2.4.1 Residential Sprinklers. Residential sprinklers shall be permitted to be listed for portions of residential occupancies as defined in 8.4.5.1.

6.2.4.2 Special Sprinklers. Special sprinklers shall be permitted to be listed for protection of a specific construction feature in a portion of an occupancy classification. *(See 8.4.8.)*

6.2.5* Temperature Characteristics.

6.2.5.1 Automatic sprinklers shall have their frame arms, deflector, coating material, or liquid bulb colored in accordance with the requirements of Table 6.2.5.1 or the requirements of 6.2.5.2, 6.2.5.3, 6.2.5.4, or 6.2.5.5.

6.2.5.2 A dot on the top of the deflector, the color of the coating material, or colored frame arms shall be permitted for color identification of corrosion-resistant sprinklers.

6.2.5.3 Color identification shall not be required for ornamental sprinklers such as factory-plated or factory-painted sprinklers or for recessed, flush, or concealed sprinklers.

6.2.5.4 The frame arms of bulb-type sprinklers shall not be required to be color coded.

6.2.5.5 The liquid in bulb-type sprinklers shall be color coded in accordance with Table 6.2.5.1.

6.2.6 Special Coatings.

6.2.6.1* Corrosion Resistant.

6.2.6.1.1 Listed corrosion-resistant sprinklers shall be installed in locations where chemicals, moisture, or other corrosive vapors sufficient to cause corrosion of such devices exist.

Table 6.2.3.1 Sprinkler Discharge Characteristics Identification

Nominal K-Factor [gpm/(psi)$^{1/2}$]	Nominal K-Factor [L/min/(bar)$^{1/2}$]	K-Factor Range [gpm/(psi)$^{1/2}$]	K-Factor Range [L/min/(bar)$^{1/2}$]	Percent of Nominal K-5.6 Discharge	Thread Type
1.4	20	1.3–1.5	19–22	25	½ in. NPT
1.9	27	1.8–2.0	26–29	33.3	½ in. NPT
2.8	40	2.6–2.9	38–42	50	½ in. NPT
4.2	60	4.0–4.4	57–63	75	½ in. NPT
5.6	80	5.3–5.8	76–84	100	½ in. NPT
8.0	115	7.4–8.2	107–118	140	¾ in. NPT or ½ in. NPT
11.2	160	10.7–11.7	159–166	200	½ in. NPT or ¾ in. NPT
14.0	200	13.5–14.5	195–209	250	¾ in. NPT
16.8	240	16.0–17.6	231–254	300	¾ in. NPT
19.6	280	18.6–20.6	272–301	350	1 in. NPT
22.4	320	21.3–23.5	311–343	400	1 in. NPT
25.2	360	23.9–26.5	349–387	450	1 in. NPT
28.0	400	26.6–29.4	389–430	500	1 in. NPT

Note: The nominal K-factor for dry-type sprinklers are used for sprinkler selection. See 23.4.4.9.3 for use of adjusted dry-type sprinkler K-factors for hydraulic calculation purposes.

Table 6.2.5.1 Temperature Ratings, Classifications, and Color Codings

Maximum Ceiling Temperature		Temperature Rating		Temperature Classification	Color Code	Glass Bulb Colors
°F	°C	°F	°C			
100	38	135–170	57–77	Ordinary	Uncolored or black	Orange or red
150	66	175–225	79–107	Intermediate	White	Yellow or green
225	107	250–300	121–149	High	Blue	Blue
300	149	325–375	163–191	Extra high	Red	Purple
375	191	400–475	204–246	Very extra high	Green	Black
475	246	500–575	260–302	Ultra high	Orange	Black
625	329	650	343	Ultra high	Orange	Black

Copyright 2014 National Fire Protection Association (NFPA). Licensed, by agreement, for individual use and download on October 4, 2014 to LEADER and READER for designated user PATTARAPORN SRITRAKOOL. No other reproduction or transmission in any form permitted without written permission of NFPA. For inquires or to report unauthorized use, contact licensing@nfpa.org.

6.2.6.1.2* Unless the requirements of 6.2.6.1.3 are met, corrosion-resistant coatings shall be applied only by the manufacturer of the sprinkler and in accordance with the requirements of 6.2.6.1.3.

6.2.6.1.3 Any damage to the protective coating occurring at the time of installation shall be repaired at once using only the coating of the manufacturer of the sprinkler in the approved manner so that no part of the sprinkler will be exposed after installation has been completed.

6.2.6.2* Painting.

6.2.6.2.1 Sprinklers shall only be painted by the sprinkler manufacturer.

6.2.6.2.2 Where sprinklers have had paint applied by other than the sprinkler manufacturer, they shall be replaced with new listed sprinklers of the same characteristics, including K-factor, thermal response, and water distribution.

6.2.6.2.3 Where cover plates on concealed sprinklers have been painted by other than the sprinkler manufacturer, the cover plate shall be replaced.

6.2.6.3 Ornamental Finishes.

6.2.6.3.1 Ornamental finishes shall only be applied to sprinklers and, if applicable, their concealed cover plates, by the sprinkler manufacturer.

6.2.6.3.2 Sprinklers with ornamental finishes where utilized shall be specifically listed.

6.2.6.4 Protective Coverings.

6.2.6.4.1 Sprinklers protecting spray areas and mixing rooms in resin application areas shall be protected against overspray residue so that they will operate in the event of fire.

6.2.6.4.2* Where protected in accordance with 6.2.6.4.1, cellophane bags having a thickness of 0.003 in. (0.076 mm) or less or thin paper bags shall be used.

6.2.6.4.3 Sprinklers that have been painted or coated shall be replaced in accordance with the requirements of 6.2.6.2.2.

6.2.7 Escutcheons and Cover Plates.

6.2.7.1 Plates, escutcheons, or other devices used to cover the annular space around a sprinkler shall be metallic or shall be listed for use around a sprinkler.

6.2.7.2* Escutcheons used with recessed, flush-type, or concealed sprinklers shall be part of a listed sprinkler assembly.

6.2.7.3 Cover plates used with concealed sprinklers shall be part of the listed sprinkler assembly.

6.2.7.4 The use of caulking or glue to seal the penetration or to affix the components of a recessed escutcheon or concealed cover plate shall not be permitted.

6.2.8 Guards. Sprinklers subject to mechanical injury shall be protected with listed guards.

6.2.9 Stock of Spare Sprinklers.

6.2.9.1* A supply of at least six spare sprinklers shall be maintained on the premises so that any sprinklers that have operated or been damaged in any way can be promptly replaced.

6.2.9.2 The sprinklers shall correspond to the types and temperature ratings of the sprinklers in the property.

6.2.9.3 The sprinklers shall be kept in a cabinet located where the temperature to which they are subjected will at no time exceed 100°F (38°C).

6.2.9.4 Where dry sprinklers of different lengths are installed, spare dry sprinklers shall not be required, provided that a means of returning the system to service is furnished.

6.2.9.5 The stock of spare sprinklers shall include all types and ratings installed and shall be as follows:

(1) For protected facilities having under 300 sprinklers — no fewer than six sprinklers
(2) For protected facilities having 300 to 1000 sprinklers — no fewer than 12 sprinklers
(3) For protected facilities having over 1000 sprinklers — no fewer than 24 sprinklers

6.2.9.6* One sprinkler wrench as specified by the sprinkler manufacturer shall be provided in the cabinet for each type of sprinkler installed to be used for the removal and installation of sprinklers in the system.

6.2.9.7 A list of the sprinklers installed in the property shall be posted in the sprinkler cabinet.

6.2.9.7.1* The list shall include the following:

(1) Sprinkler Identification Number (SIN) if equipped; or the manufacturer, model, orifice, deflector type, thermal sensitivity, and pressure rating
(2) General description
(3) Quantity of each type to be contained in the cabinet
(4) Issue or revision date of the list

6.3 Aboveground Pipe and Tube.

6.3.1 General.

6.3.1.1 Pipe or tube shall meet or exceed one of the standards in Table 6.3.1.1 or be in accordance with 6.3.7.8.

6.3.1.1.1* Underground pipe shall be permitted to extend into the building through the slab or wall not more than 24 in. (0.6 m).

6.3.1.2 Steel pipe shall be in accordance with 6.3.2, 6.3.3, or 6.3.4.

6.3.1.3 Copper tube shall be in accordance with 6.3.5.

6.3.1.4 Nonmetallic pipe shall be in accordance with 6.3.7.

6.3.1.5 Brass pipe shall be in accordance with 6.3.7.

6.3.2* Steel Pipe — Welded or Roll-Grooved. When steel pipe referenced in Table 6.3.1.1 is used and joined by welding as referenced in 6.5.2 or by roll-grooved pipe and fittings as referenced in 6.5.3, the minimum nominal wall thickness for pressures up to 300 psi (20.7 bar) shall be in accordance with Schedule 10 for pipe sizes up to 5 in. (125 mm), 0.134 in. (3.40 mm) for 6 in. (150 mm) pipe, 0.188 in. (4.78 mm) for 8 in. and 10 in. (200 mm and 250 mm) pipe, and 0.330 in. (8.38 mm) for 12 in. (300 mm) pipe.

6.3.3 Steel Pipe — Threaded. When steel pipe referenced in Table 6.3.1.1 is joined by threaded fittings referenced in 6.5.1 or by fittings used with pipe having cut grooves, the minimum wall thickness shall be in accordance with Schedule 30 pipe [in sizes 8 in. (200 mm) and larger] or Schedule 40 pipe [in sizes less than 8 in. (200 mm)] for pressures up to 300 psi (20.7 bar).

6.3.4 Specially Listed Steel Pipe. Pressure limitations and wall thickness for steel pipe specially listed in accordance with 6.3.7.8 shall be permitted to be in accordance with the pipe listing requirements.

Copyright 2014 National Fire Protection Association (NFPA). Licensed, by agreement, for individual use and download on October 4, 2014 to LEADER and READER for designated user PATTARAPORN SRITRAKOOL. No other reproduction or transmission in any form permitted without written permission of NFPA. For inquires or to report unauthorized use, contact licensing@nfpa.org.

Table 6.3.1.1 Pipe or Tube Materials and Dimensions

Materials and Dimensions	Standard
Ferrous Piping (Welded and Seamless)	
Specification for Black and Hot-Dipped Zinc-Coated (Galvanized) Welded and Seamless Steel Pipe for Fire Protection Use	ASTM A 795
Specification for Pipe, Steel, Black and Hot-Dipped, Zinc-Coated, Welded and Seamless	ANSI/ASTM A 53
Wrought Steel Pipe	ANSI/ASME B36.10M
Specification for Electric-Resistance-Welded Steel Pipe	ASTM A 135
Copper Tube (Drawn, Seamless)	
Specification for Seamless Copper Tube	ASTM B 75
Specification for Seamless Copper Water Tube	ASTM B 88
Specification for General Requirements for Wrought Seamless Copper and Copper-Alloy Tube	ASTM B 251
Specification for Liquid and Paste Fluxes for Soldering Applications of Copper and Copper-Alloy Tube	ASTM B 813
Brazing Filler Metal (Classification BCuP-3 or BCuP-4)	AWS A5.8
Solder Metal, Section 1: Solder Alloys Containing Less Than 0.2% Lead and Having Solidus Temperatures Greater than 400°F	ASTM B 32
Alloy Materials	ASTM B 446
CPVC	
Nonmetallic Piping Specification for Special Listed Chlorinated Polyvinyl chloride (CPVC) Pipe	ASTM F 442
Brass Pipe	
Specification for Seamless Red Brass Pipe	ASTM B 43

6.3.5* Copper Tube. Copper tube as specified in the standards listed in Table 6.3.1.1 shall have a wall thickness of Type K, Type L, or Type M where used in sprinkler systems.

6.3.6 Brass Pipe. Brass pipe specified in Table 6.3.1.1 shall be permitted in the standard weight in sizes up to 6 in. (150 mm) for pressures up to 175 psig (12 bar) and in the extra strong weight in sizes up to 8 in. (200 mm) for pressures up to 300 psig (20 bar).

6.3.7* Nonmetallic Pipe. Nonmetallic pipe in accordance with Table 6.3.1.1 shall be investigated for suitability in automatic sprinkler installations and listed for this service.

6.3.7.1 Listed nonmetallic pipe shall be installed in accordance with its listing limitations, including installation instructions.

6.3.7.1.1 Manufacturer's installation instructions shall include its listing limitations.

6.3.7.2* When nonmetallic pipe is used in combination systems utilizing steel piping internally coated with corrosion inhibitors and nonmetallic piping, the steel pipe coating shall be investigated for compatibility with the nonmetallic piping by a testing laboratory.

6.3.7.3* When nonmetallic pipe is used in combination systems utilizing steel pipe that is not internally coated with chemical corrosion inhibitors, no additional evaluations shall be required.

6.3.7.4 When nonmetallic pipe is used in combination systems utilizing steel pipe, cutting oils and lubricants used for fabrication of the steel piping shall be compatible with the nonmetallic pipe materials.

6.3.7.5 Fire-stopping materials intended for use on nonmetallic piping penetrations shall be investigated for compatibility with the nonmetallic pipe materials.

6.3.7.6 Nonmetallic pipe listed for light hazard occupancies shall be permitted to be installed in ordinary hazard rooms of otherwise light hazard occupancies where the room does not exceed 400 ft^2 (37 m^2).

6.3.7.7 Nonmetallic pipe shall not be listed for portions of an occupancy classification.

6.3.7.8* Listed Pipe and Tubing.

6.3.7.8.1 Other types of pipe or tube investigated for suitability in automatic sprinkler installations and listed for this service, including but not limited to CPVC and steel, and differing from that provided in Table 6.3.1.1 shall be permitted where installed in accordance with their listing limitations, including installation instructions.

6.3.7.8.2 Pipe or tube listed for light hazard occupancies shall be permitted to be installed in ordinary hazard rooms of otherwise light hazard occupancies where the room does not exceed 400 ft^2 (37 m^2).

6.3.7.8.3 Pipe or tube shall not be listed for portions of an occupancy classification.

6.3.7.8.4 Bending of listed pipe and tubing shall be permitted as allowed by the listing.

6.3.7.9 Pipe and Tube Bending.

6.3.7.9.1 Bending of Schedule 10 steel pipe, or any steel pipe of wall thickness equal to or greater than Schedule 10 and Types K and L copper tube, shall be permitted when bends are made with no kinks, ripples, distortions, or reductions in diameter or any noticeable deviations from round.

6.3.7.9.2 For Schedule 40 and copper tubing, the minimum radius of a bend shall be six pipe diameters for pipe sizes 2 in. (50 mm) and smaller and five pipe diameters for pipe sizes 2½ in. (65 mm) and larger.

6.3.7.9.3 For all other steel pipe, the minimum radius of a bend shall be 12 pipe diameters for all sizes.

6.3.7.9.4 Bending of listed pipe and tubing shall be permitted as allowed by the listing.

6.3.7.10 Pipe and Tube Identification.

6.3.7.10.1* All pipe, including specially listed pipe allowed by 6.3.7.8, shall be marked along its length by the manufacturer in such a way as to properly identify the type of pipe.

6.3.7.10.2 The marking shall be visible on every piece of pipe over 2 ft (610 mm) long.

Copyright 2014 National Fire Protection Association (NFPA). Licensed, by agreement, for individual use and download on October 4, 2014 to LEADER and READER for designated user PATTARAPORN SRITRAKOOL. No other reproduction or transmission in any form permitted without written permission of NFPA. For inquires or to report unauthorized use, contact licensing@nfpa.org.

6.3.7.10.3 Pipe identification shall include the manufacturer's name, model designation, or schedule.

6.4 Fittings.

6.4.1 Fittings used in sprinkler systems shall meet or exceed the standards in Table 6.4.1 or be in accordance with 6.4.2 or 6.4.4.

Table 6.4.1 Fittings Materials and Dimensions

Materials and Dimensions	Standard
Cast Iron	
Cast Iron Threaded Fittings, Class 125 and 250	ASME B16.4
Cast Iron Pipe Flanges and Flanged Fittings	ASME B16.1
Malleable Iron	
Malleable Iron Threaded Fittings, Class 150 and 300	ASME B16.3
Steel	
Factory-Made Wrought Steel Buttweld Fittings	ASME B16.9
Buttwelding Ends for Pipe, Valves, Flanges, and Fittings	ASME B16.25
Specification for Piping Fittings of Wrought Carbon Steel and Alloy Steel for Moderate and Elevated Temperatures	ASTM A 234
Steel Pipe Flanges and Flanged Fittings	ASME B16.5
Forged Steel Fittings, Socket Welded and Threaded	ASME B16.11
Copper	
Wrought Copper and Copper Alloy Solder Joint Pressure Fittings	ASME B16.22
Cast Copper Alloy Solder Joint Pressure Fittings	ASME B16.18
CPVC	
Chlorinated Polyvinyl Chloride (CPVC) Specification for Schedule 80 CPVC Threaded Fittings	ASTM F 437
Specification for Schedule 40 CPVC Socket Type Fittings	ASTM F 438
Specification for Schedule 80 CPVC Socket Type Fittings	ASTM F 439
Bronze Fittings	
Cast Bronze Threaded Fittings	ASTM B16.15

6.4.2 In addition to the standards in Table 6.4.1, nonmetallic fittings shall also be in accordance with 6.4.4.

6.4.3 Nonmetallic Fittings. Nonmetallic fittings in accordance with Table 6.4.1 shall be investigated for suitability in automatic sprinkler installations and listed for this service. Listed nonmetallic fittings shall be installed in accordance with their listing limitations, including installation instructions.

6.4.3.1* When nonmetallic fittings are used in combination systems utilizing internally coated steel piping and nonmetallic fittings, the steel pipe shall be investigated for compatibility with the nonmetallic fittings by a testing laboratory. Cutting oils and lubricants used for fabrication of the steel piping shall be compatible with the nonmetallic fitting materials.

6.4.3.2* When nonmetallic fittings are used in combination systems utilizing non–internally coated steel piping and nonmetallic fittings, no additional evaluations are required. Cutting oils and lubricants used for fabrication of the steel piping shall be compatible with the nonmetallic fitting materials.

6.4.3.3 Fire-stopping materials intended for use on nonmetallic fitting penetrations shall be investigated for compatibility with the nonmetallic fitting materials.

6.4.4* Other types of fittings investigated for suitability in automatic sprinkler installations and listed for this service, including but not limited to CPVC and steel, and differing from that provided in Table 6.4.1 shall be permitted when installed in accordance with their listing limitations, including installation instructions.

6.4.5* Fitting Pressure Limits.

6.4.5.1 Standard weight pattern cast-iron fittings 2 in. (50 mm) in size and smaller shall be permitted where pressures do not exceed 300 psi (20.7 bar).

6.4.5.2 Standard weight pattern malleable iron fittings 6 in. (150 mm) in size and smaller shall be permitted where pressures do not exceed 300 psi (20.7 bar).

6.4.5.3 Fittings not meeting the requirements of 6.4.5.1 and 6.4.5.2 shall be extra-heavy pattern where pressures exceed 175 psi (12.1 bar).

6.4.5.4 Cast bronze threaded fittings in accordance with ASTM B 16.15, *Cast Bronze Threaded Fittings*, shall be permitted where pressures do not exceed 200 psi (13.7 bar) for Class 125 fittings and 400 psi (27.6 bar) for Class 250 fittings.

6.4.5.5 Listed fittings shall be permitted for system pressures up to the limits specified in their listings.

6.4.6* Couplings and Unions.

6.4.6.1 Screwed unions shall not be used on pipe larger than 2 in. (50 mm).

6.4.6.2 Couplings and unions of other than screwed-type shall be of types listed specifically for use in sprinkler systems.

6.4.7 Reducers and Bushings.

6.4.7.1 Unless the requirements of 6.4.7.2 or 6.4.7.3 are met, a one-piece reducing fitting shall be used wherever a change is made in the size of the pipe.

6.4.7.2 Hexagonal or face bushings shall be permitted in reducing the size of openings of fittings when standard fittings of the required size are not available.

6.4.7.3 Hexagonal bushings as permitted in 8.15.20.2 shall be permitted to be used.

6.4.7.4 The requirements of 6.4.7.1 and 6.4.7.2 shall not apply to CPVC fittings.

6.5 Joining of Pipe and Fittings.

6.5.1 Threaded Pipe and Fittings.

6.5.1.1 All threaded pipe and fittings shall have threads cut to ASME B1.20.1, *Pipe Threads, General Purpose (Inch).*

6.5.1.2* Steel pipe with wall thicknesses less than Schedule 30 [in sizes 8 in. (200 mm) and larger] or Schedule 40 [in sizes less than 8 in. (200 mm)] shall only be permitted to be joined by threaded fittings where the threaded assembly is investigated for suitability in automatic sprinkler installations and listed for this service.

Copyright 2014 National Fire Protection Association (NFPA). Licensed, by agreement, for individual use and download on October 4, 2014 to LEADER and READER for designated user PATTARAPORN SRITRAKOOL. No other reproduction or transmission in any form permitted without written permission of NFPA. For inquires or to report unauthorized use, contact licensing@nfpa.org.

6.5.1.3 Joint compound or tape shall be applied only to male threads.

6.5.2 Welded Pipe and Fittings.

6.5.2.1 General.

6.5.2.1.1 Welding shall be permitted as a means of joining sprinkler piping in accordance with 6.5.2.2 through 6.5.2.6.

6.5.2.2* Fabrication.

6.5.2.2.1 When welding sprinkler pipe, the pipe shall be shop welded unless the requirements of 6.5.2.2 or 6.5.2.3 are met.

6.5.2.2.2 Where the design specifications require any part of the piping system to be welded in place, welding of sprinkler piping shall be permitted where the welding process is performed in accordance with NFPA 51B and the mechanical fittings required by 8.15.22 and 8.16.3 are provided.

6.5.2.2.3 Tabs for longitudinal earthquake bracing shall be permitted to be welded to in-place piping where the welding process is performed in accordance with NFPA 51B.

6.5.2.2.4 Welding shall not be performed where there is impingement of rain, snow, sleet, or high wind on the weld area of the pipe product.

6.5.2.2.5 Torch cutting and welding shall not be permitted as a means of modifying or repairing sprinkler systems.

6.5.2.3 Fittings.

6.5.2.3.1* Welded fittings used to join pipe shall be listed fabricated fittings or manufactured in accordance with Table 6.4.1.

6.5.2.3.2 Fittings referenced in 6.5.2.3.1 shall be joined in conformance with a qualified welding procedure as set forth in this section and shall be an acceptable product under this standard, provided that materials and wall thickness are compatible with other sections of this standard.

6.5.2.3.3 Fittings shall not be required where pipe ends are buttwelded in accordance with the requirements of 6.5.2.4.3.

6.5.2.3.4 When the pipe size in a run of piping is reduced, a reducing fitting designed for that purpose shall be used in accordance with the requirements of 6.5.2.3.1.

6.5.2.4 Welding Requirements.

6.5.2.4.1* Welds between pipe and welding outlet fittings shall be permitted to be attached by full penetration welds, partial penetration groove welds, or fillet welds.

6.5.2.4.2* The minimum throat thickness shall be not less than the thickness of the pipe, the thickness of the welding fitting, or 3⁄16 in. (4.8 mm), whichever is least.

6.5.2.4.3* Circumferential butt joints shall be cut, beveled, and fit so that full penetration is achievable.

6.5.2.4.4 Full penetration welding shall not be required.

6.5.2.4.5 Where slip-on flanges are welded to pipe with a single fillet weld, the weld shall be on the hub side of the flange and the minimum throat weld thickness shall not be less than 1.25 times the pipe wall thickness or the hub thickness, whichever is less.

6.5.2.4.6 Face welds on the internal face of the flange shall be permitted as a water seal in addition to the hub weld required in 6.5.2.4.5.

6.5.2.4.7 Tabs for longitudinal earthquake bracing shall have minimum throat weld thickness not less than 1.25 times the pipe wall thickness and welded on both sides of the longest dimension.

6.5.2.4.8 When welding is performed, the following shall apply:

(1) Holes in piping for outlets shall be cut to the full inside diameter of fittings prior to welding in place of the fittings.
(2) Discs shall be retrieved.
(3) Openings cut into piping shall be smooth bore, and all internal slag and welding residue shall be removed.
(4) Fittings shall not penetrate the internal diameter of the piping.
(5) Steel plates shall not be welded to the ends of piping or fittings.
(6) Fittings shall not be modified.
(7) Nuts, clips, eye rods, angle brackets, or other fasteners shall not be welded to pipe or fittings, except as permitted in 6.5.2.2.3 and 6.5.2.4.7.
(8) Completed welds shall be free from cracks, incomplete fusion, surface porosity greater than 1⁄16 in. (1.6 mm) diameter, and undercut deeper than 25 percent of the wall thickness or 1⁄32 in. (0.8 mm), whichever is less.
(9) Completed circumferential butt weld reinforcement shall not exceed 3⁄32 in. (2.4 mm).

6.5.2.5 Qualifications.

6.5.2.5.1 A welding procedure shall be prepared and qualified by the contractor or fabricator before any welding is done.

6.5.2.5.2 Qualification of the welding procedure to be used and the performance of all welders and welding operators shall be required and shall meet or exceed the requirements of AWS B2.1, *Specification for Welding Procedure and Performance Qualification*; ASME *Boiler and Pressure Vessel Code*, Section IX, "Welding and Brazing Qualifications"; or other applicable qualification standard as required by the authority having jurisdiction, except as permitted by 6.5.2.5.3.

6.5.2.5.3 Successful procedure qualification of complete joint penetration groove welds shall qualify partial joint penetration (groove/fillet) welds and fillet welds in accordance with the provisions of this standard.

6.5.2.5.4 Welding procedures qualified under standards recognized by previous editions of this standard shall be permitted to be continued in use.

6.5.2.5.5 Contractors or fabricators shall be responsible for all welding they produce.

6.5.2.5.6 Each contractor or fabricator shall have available to the authority having jurisdiction an established written quality assurance procedure ensuring compliance with the requirements of 6.5.2.4.

6.5.2.6 Records.

6.5.2.6.1 Welders or welding machine operators shall, upon completion of each welded pipe, place their identifiable mark or label onto each piece adjacent to a weld.

6.5.2.6.2 Contractors or fabricators shall maintain certified records, which shall be available to the authority having jurisdiction, of the procedures used and the welders or welding

Copyright 2014 National Fire Protection Association (NFPA). Licensed, by agreement, for individual use and download on October 4, 2014 to LEADER and READER for designated user PATTARAPORN SRITRAKOOL. No other reproduction or transmission in any form permitted without written permission of NFPA. For inquires or to report unauthorized use, contact licensing@nfpa.org.

machine operators employed by them, along with their welding identification.

6.5.2.6.3 Records shall show the date and the results of procedure and performance qualifications.

6.5.3 Groove Joining Methods.

6.5.3.1* Pipe, fittings, valves, and devices to be joined with grooved couplings shall contain cut, rolled, or cast grooves that are dimensionally compatible with the couplings.

6.5.3.1.1* Pipe, fittings, valves, devices, and couplings that conform with or are listed in compliance with standardized groove specifications shall be considered compatible.

6.5.3.1.2 Other groove dimensions and grooving methods shall be acceptable in accordance with 6.5.5.1.

6.5.3.2 Grooved couplings, including gaskets used on dry pipe, preaction, and deluge systems, shall be listed for dry service.

6.5.4* Brazed and Soldered Joints.

6.5.4.1 Solder joints, where permitted, shall be fabricated in accordance with the methods and procedures listed in ASTM B 828, *Standard Practice for Making Capillary Joints by Soldering of Copper and Copper Alloy Tube and Fittings*.

6.5.4.2 Unless the requirements of 6.5.4.3 or 6.5.4.4 are met, joints for the connection of copper tube shall be brazed.

6.5.4.3 Solder joints shall be permitted for exposed wet pipe systems in light hazard occupancies where the temperature classification of the installed sprinklers is of the ordinary- or intermediate-temperature classification.

6.5.4.4 Solder joints shall be permitted for wet pipe systems in light hazard and ordinary hazard (Group 1) occupancies where the piping is concealed, irrespective of sprinkler temperature ratings.

6.5.4.5* Soldering fluxes shall be in accordance with Table 6.3.1.1.

6.5.4.6 Brazing fluxes, if used, shall not be of a highly corrosive type.

6.5.5 Other Joining Methods.

6.5.5.1 Other joining methods investigated for suitability in automatic sprinkler installations and listed for this service shall be permitted where installed in accordance with their listing limitations, including installation instructions.

6.5.5.2 Outlet Fittings. Rubber-gasketed outlet fittings that are used on sprinkler systems shall meet the following requirements:

(1) Be installed in accordance with the listing and manufacturer's installation instructions
(2) Have all disks retrieved
(3) Have smooth bores cut into the pipe, with all cutting residue removed
(4) Not be modified

6.5.6 End Treatment.

6.5.6.1 After cutting, pipe ends shall have burrs and fins removed.

6.5.6.2 Pipe used with listed fittings and its end treatment shall be in accordance with the fitting manufacturer's installation instructions and the fitting's listing.

6.6* Hangers. Hangers shall be in accordance with the requirements of Section 9.1.

6.7 Valves.

6.7.1 General.

6.7.1.1 Valve Pressure Requirements. When water pressures exceed 175 psi (12.1 bar), valves shall be used in accordance with their pressure ratings.

6.7.1.2 Valve Closure Time. Listed indicating valves shall not close in less than 5 seconds when operated at maximum possible speed from the fully open position.

6.7.1.3 Listed Indicating Valves. Unless the requirements of 6.7.1.3.1, 6.7.1.3.2, or 6.7.1.3.3 are met, all valves controlling connections to water supplies and to supply pipes to sprinklers shall be listed indicating valves.

6.7.1.3.1 A listed underground gate valve equipped with a listed indicator post shall be permitted.

6.7.1.3.2 A listed water control valve assembly with a reliable position indication connected to a remote supervisory station shall be permitted.

6.7.1.3.3 A nonindicating valve, such as an underground gate valve with approved roadway box, complete with T-wrench, and where accepted by the authority having jurisdiction, shall be permitted.

6.7.2 Wafer-Type Valves. Wafer-type valves with components that extend beyond the valve body shall be installed in a manner that does not interfere with the operation of any system components.

6.7.3 Drain Valves and Test Valves. Drain valves and test valves shall be approved.

6.7.4* Identification of Valves.

6.7.4.1 All control, drain, and test connection valves shall be provided with permanently marked weatherproof metal or rigid plastic identification signs.

6.7.4.2 The identification sign shall be secured with corrosion-resistant wire, chain, or other approved means.

6.7.4.3 The control valve sign shall identify the portion of the building served.

6.7.4.3.1* Systems that have more than one control valve that must be closed to work on a system or space shall have a sign referring to existence and location of other valves.

6.8 Fire Department Connections.

6.8.1* Unless the requirements of 6.8.1.1, 6.8.1.2, or 6.8.1.3 are met, the fire department connection(s) shall consist of two 2½ in. (65 mm) connections using NH internal threaded swivel fitting(s) with "2.5–7.5 NH standard thread," as specified in NFPA 1963.

6.8.1.1 Where local fire department connections do not conform to NFPA 1963, the authority having jurisdiction shall be permitted to designate the connection to be used.

6.8.1.2 The use of threadless couplings shall be permitted where required by the authority having jurisdiction and where listed for such use.

6.8.1.3 A single-outlet fire department connection shall be acceptable where piped to a 3 in. (80 mm) or smaller riser.

Copyright 2014 National Fire Protection Association (NFPA). Licensed, by agreement, for individual use and download on October 4, 2014 to LEADER and READER for designated user PATTARAPORN SRITRAKOOL. No other reproduction or transmission in any form permitted without written permission of NFPA. For inquires or to report unauthorized use, contact licensing@nfpa.org.

6.8.2 Fire department connections shall be equipped with approved plugs or caps, properly secured and arranged for easy removal by fire departments.

6.8.3 Fire department connections shall be of an approved type.

6.9 Waterflow Alarm Devices.

6.9.1 General. Waterflow alarm devices shall be listed for the service and so constructed and installed that any flow of water from a sprinkler system equal to or greater than that from a single automatic sprinkler of the smallest K-factor installed on the system will result in an audible alarm on the premises within 5 minutes after such flow begins and until such flow stops.

6.9.2 Waterflow Detection Devices.

6.9.2.1 Wet Pipe Systems. The alarm apparatus for a wet pipe system shall consist of a listed alarm check valve or other listed waterflow detection alarm device with the necessary attachments required to give an alarm.

6.9.2.2 Dry Pipe Systems.

6.9.2.2.1 The alarm apparatus for a dry pipe system shall consist of listed alarm attachments to the dry pipe valve.

6.9.2.2.2 Where a dry pipe valve is located on the system side of an alarm valve, connection of the actuating device of the alarms for the dry pipe valve to the alarms on the wet pipe system shall be permitted.

6.9.2.3 Preaction and Deluge Systems. The alarm apparatus for deluge and preaction systems shall consist of alarms actuated independently by the detection system and the flow of water.

6.9.2.3.1 Deluge and preaction systems activated by pilot sprinklers shall not require an independent detection system alarm.

6.9.2.4* Paddle-Type Waterflow Devices. Paddle-type waterflow alarm indicators shall be installed in wet systems only.

6.9.3 Attachments — General.

6.9.3.1* An alarm unit shall include a listed mechanical alarm, horn, or siren or a listed electric gong, bell, speaker, horn, or siren.

6.9.3.2* Outdoor water motor-operated or electrically operated bells shall be weatherproofed and guarded.

6.9.3.3 All piping to water motor-operated devices shall be galvanized steel, brass, copper, or other approved metallic corrosion-resistant material of not less than ¾ in. (20 mm) nominal pipe size.

6.9.3.4 Piping between the sprinkler system and a pressure-actuated alarm-initiating device shall be galvanized steel, brass, copper, or other approved metallic corrosion-resistant material of not less than ⅜ in. (10 mm) nominal pipe size.

6.9.4* Attachments — Electrically Operated.

6.9.4.1 Electrically operated alarm attachments forming part of an auxiliary, central station, local protective, proprietary, or remote station signaling system shall be installed in accordance with *NFPA 72*.

6.9.4.2 Sprinkler waterflow alarm systems that are not part of a required protective signaling system shall not be required to be supervised and shall be installed in accordance with *NFPA 70*, Article 760.

6.9.4.3 Outdoor electric alarm devices shall be listed for outdoor use.

6.9.5 Alarm Device Drains. Drains from alarm devices shall be arranged so that there will be no overflowing at the alarm apparatus, at domestic connections, or elsewhere with the sprinkler drains wide open and under system pressure. *(See 8.16.2.6.)*

6.10* Signs. (Reserved)

Chapter 7 System Requirements

7.1 Wet Pipe Systems.

7.1.1 Pressure Gauges.

7.1.1.1 An approved pressure gauge conforming to 8.17.3 shall be installed in each system riser.

7.1.1.2 Pressure gauges shall be installed above and below each alarm check valve or system riser check valve where such devices are present.

7.1.1.2.1 Pressure gauges below check valves required by 8.17.5.2.2(1) shall not be required.

7.1.2 Relief Valves.

7.1.2.1 Unless the requirements of 7.1.2.2 are met, a wet pipe system shall be provided with a listed relief valve not less than ½ in. (12 mm) in size and set to operate at 175 psi (12.1 bar) or 10 psi (0.7 bar) in excess of the maximum system pressure, whichever is greater.

7.1.2.2 Where auxiliary air reservoirs are installed to absorb pressure increases, a relief valve shall not be required.

7.1.2.3 A relief valve per 7.1.2.1 shall be required downstream of check valves required by 8.17.5.2.2(1).

7.1.3 Auxiliary Systems. A wet pipe system shall be permitted to supply an auxiliary dry pipe, preaction, or deluge system, provided the water supply is adequate.

7.1.4 Heat tracing shall not be used in lieu of heated valve enclosures to protect the valve and supply pipe from freezing.

7.2* Dry Pipe Systems.

7.2.1 Pressure Gauges. Approved pressure gauges in accordance with 8.17.3 shall be connected as follows:

(1) On the water side and air side of the dry pipe valve
(2) At the air pump supplying the air receiver where one is provided
(3) At the air receiver where one is provided
(4) In each independent pipe from air supply to dry pipe system
(5) At quick-opening devices

7.2.2 Sprinklers. The following sprinkler orientations and arrangements shall be permitted for dry pipe systems:

(1) Upright sprinklers
(2)*Listed dry sprinklers
(3) Pendent sprinklers and sidewall sprinklers installed on return bends, where the sprinklers, return bend, and branch line piping are in an area maintained at or above 40°F (4°C)
(4) Horizontal sidewall sprinklers installed so that water is not trapped

Copyright 2014 National Fire Protection Association (NFPA). Licensed, by agreement, for individual use and download on October 4, 2014 to LEADER and READER for designated user PATTARAPORN SRITRAKOOL. No other reproduction or transmission in any form permitted without written permission of NFPA. For inquires or to report unauthorized use, contact licensing@nfpa.org.

(5) Pendent sprinklers and sidewall sprinklers, where the sprinklers and branch line piping are in an area maintained at or above 40°F (4°C), the water supply is potable, and the piping for the dry pipe system is copper or CPVC specifically listed for dry pipe applications

7.2.3* Size of Systems.

7.2.3.1* The system capacity (volume) controlled by a dry pipe valve shall be determined by 7.2.3.2, 7.2.3.3, 7.2.3.4, 7.2.3.5, or 7.2.3.7.

7.2.3.1.1 For dry pipe systems protecting dwelling unit portions of any occupancy, system size shall be such that initial water is discharged from the system test connection in not more than 15 seconds, starting at the normal air pressure on the system and at the time of fully opened inspection test connection.

7.2.3.1.1.1 Dry pipe systems protecting dwelling unit portions of any occupancy shall not be permitted to use the options outlined in 7.2.3.2, 7.2.3.3, or 7.2.3.4.

7.2.3.2 System size shall be such that initial water is discharged from the system test connection in not more than 60 seconds, starting at the normal air pressure on the system and at the time of fully opened inspection test connection.

7.2.3.3 A system size of not more than 500 gal (1893 L) shall be permitted without a quick-opening device and shall not be required to meet any specific water delivery requirement to the inspection test connection.

7.2.3.4 A system size of not more than 750 gal (2839 L) shall be permitted with a quick-opening device and shall not be required to meet any specific water delivery requirement to the inspection test connection.

7.2.3.5 System size shall be based on dry pipe systems being calculated for water delivery in accordance with 7.2.3.6.

7.2.3.6 Dry Pipe System Water Delivery.

7.2.3.6.1 Calculations for dry pipe system water delivery shall be based on the hazard shown in Table 7.2.3.6.1.

Table 7.2.3.6.1 Dry Pipe System Water Delivery

Hazard	Number of Most Remote Sprinklers Initially Open	Maximum Time of Water Delivery (seconds)
Light	1	60
Ordinary I	2	50
Ordinary II	2	50
Extra I	4	45
Extra II	4	45
High piled	4	40

7.2.3.6.2 The calculation program and method shall be listed by a nationally recognized testing laboratory.

7.2.3.6.3 For dry pipe systems protecting dwelling unit portions of any occupancy, the sprinklers in the dwelling unit shall have a maximum water delivery time of 15 seconds to the single most remote sprinkler.

7.2.3.6.4 Residential sprinklers shall be listed for dry pipe applications.

7.2.3.7* System size shall be such that initial water discharge from the system trip test connection or manifold outlets is not more than the maximum time of water delivery specified in Table 7.2.3.6.1, starting at normal air pressure on the system and at the time of fully opened test connection.

7.2.3.7.1 When flow is from four sprinklers, the test manifold shall be arranged to simulate two sprinklers on each of two sprinkler branch lines.

7.2.3.7.2 When flow is from three sprinklers, the test manifold shall be arranged to simulate two sprinklers on the most remote branch line and one sprinkler on the next adjacent branch line.

7.2.3.7.3 When flow is from two sprinklers, the test manifold shall be arranged to simulate two sprinklers on the most remote branch line.

7.2.3.7.4 When flow is from one sprinkler, the test manifold shall be installed as per the requirements for a trip test connection in accordance with 8.17.4.3.

7.2.3.7.5 A system meeting the requirements of this section shall not be required to also meet the requirements of 7.2.3.2 or 7.2.3.5.

7.2.3.8 Dry pipe systems with water delivery times other than 7.2.3.2, 7.2.3.5, and 7.2.3.7 shall be acceptable where listed by a nationally recognized testing laboratory.

7.2.3.9 Unless installed in a heated enclosure, check valves shall not be used to subdivide the dry pipe systems.

7.2.3.9.1 When check valves are used to subdivide dry pipe systems in accordance with 7.2.3.9, a hole ⅛ in. (3 mm) in diameter shall be drilled in the clapper of each check valve to permit equalization of air pressure among the various parts of the system.

7.2.3.9.2 Where auxiliary drains are not provided for each subdivided section, an approved indicating drain valve supervised in the closed position in accordance with 8.16.1.1.2, connected to a bypass around each check valve, shall be provided as a means for draining the system.

7.2.3.10 Gridded dry pipe systems shall not be installed.

7.2.4 Quick-Opening Devices.

7.2.4.1 A listed quick-opening device shall be permitted to help meet the requirements of 7.2.3.2, 7.2.3.5, 7.2.3.7, or 7.2.3.8.

7.2.4.2 The quick-opening device shall be located as close as practical to the dry pipe valve.

7.2.4.3 To protect the restriction orifice and other operating parts of the quick-opening device against submergence, the connection to the riser shall be above the point at which water (priming water and back drainage) is expected when the dry pipe valve and quick-opening device are set, except where design features of the particular quick-opening device make these requirements unnecessary.

7.2.4.4 Where a valve is installed in the connection between a dry pipe sprinkler riser and a quick-opening device, it shall be an indicating-type valve that is sealed, locked, or electrically supervised in the open position.

7.2.4.5 A check valve shall be installed between the quick-opening device and the intermediate chamber of the dry pipe valve, where the quick-opening device requires protection against submergence after system operation.

7.2.4.6 If the quick-opening device requires pressure feedback from the intermediate chamber, a valve type that will

Copyright 2014 National Fire Protection Association (NFPA). Licensed, by agreement, for individual use and download on October 4, 2014 to LEADER and READER for designated user PATTARAPORN SRITRAKOOL. No other reproduction or transmission in any form permitted without written permission of NFPA. For inquires or to report unauthorized use, contact licensing@nfpa.org.

clearly indicate whether it is opened or closed shall be permitted in place of that check valve.

7.2.4.7 Where a valve is utilized in accordance with 7.2.4.6, the valve shall be constructed so that it can be locked or sealed in the open position.

7.2.4.8 Antiflooding Device.

7.2.4.8.1 Unless the requirements of 7.2.4.8.2 are met, a listed antiflooding device shall be installed in the connection between the dry pipe sprinkler riser and the quick-opening device.

7.2.4.8.2 A listed antiflooding device shall not be required where the quick-opening device has built-in antiflooding design features or the quick-opening device is listed or approved without the use of an antiflooding device.

7.2.5* Location and Protection of Dry Pipe Valve.

7.2.5.1* General. The dry pipe valve and supply pipe shall be protected against freezing and mechanical injury.

7.2.5.2 Valve Rooms.

7.2.5.2.1 Valve rooms shall be lighted and heated.

7.2.5.2.2 The source of heat shall be of a permanently installed type.

7.2.5.2.3 Heat tape shall not be used in lieu of heated valve enclosures to protect the dry pipe valve and supply pipe against freezing.

7.2.5.3 Supply. The supply for the sprinkler in the dry pipe valve enclosure shall be either from the dry side of the system or from a wet pipe sprinkler system that protects the area where the dry pipe valve is located.

7.2.5.4 High Water Level Protection.

7.2.5.4.1 Where it is possible to reseat the dry valve after actuation without first draining the system, protection against occurrence of water above the clapper shall be permitted in accordance with 7.2.5.4.3.

7.2.5.4.2 Low Differential Dry Pipe Valve. Protection against accumulation of water above the clapper shall be provided for low differential dry pipe valves in accordance with 7.2.5.4.3.

7.2.5.4.3 High Water Level Device. An automatic high water level signaling device or an automatic drain shall be permitted.

7.2.6 Air Pressure and Supply.

7.2.6.1 Where the term *air* is used throughout this standard, it shall also include the use of nitrogen or other approved gas.

7.2.6.2 Maintenance of Air Pressure. Air or nitrogen or other approved gas pressure shall be maintained on dry pipe systems throughout the year.

7.2.6.3* Air Supply.

7.2.6.3.1 The compressed air supply shall be from a source available at all times.

7.2.6.3.2* The air supply shall have a capacity capable of restoring normal air pressure in the system within 30 minutes.

7.2.6.3.3 The requirements of 7.2.6.3.2 shall not apply in refrigerated spaces maintained below 5°F (–15°C), where normal system air pressure shall be permitted to be restored within 60 minutes.

7.2.6.4 Air Supply Connections.

7.2.6.4.1 Connection pipe from the air supply to the dry pipe valve shall not be less than ½ in. (15 mm) in diameter and shall enter the system above the priming water level of the dry pipe valve.

7.2.6.4.2 A check valve shall be installed in the air filling connection, and a listed or approved shutoff valve of either the renewable disc or ball valve type shall be installed on the supply side of this check valve and shall remain closed unless filling the system.

7.2.6.5 Relief Valve. An approved relief valve shall be provided between the air supply and the shutoff valve and shall be set to relieve pressure no less than 10 psi (0.7 bar) in excess of system air pressure provided in 7.2.6.7.1 and shall not exceed the manufacturer's limitations.

7.2.6.6 Automatic Air Maintenance.

7.2.6.6.1* Unless the requirements of 7.2.6.6.2 are met, where the air supply to a dry pipe system is maintained automatically, the air supply shall be from a dependable plant system or an air compressor with an air receiver, and shall utilize an air maintenance device specifically listed for such service and capable of controlling the required air pressure on, and maximum airflow to, the dry pipe system.

7.2.6.6.2 Where the air compressor supplying the dry pipe system has a capacity less than 5.5 ft^3/min (156 L/min) at 10 psi (0.7 bar), an air receiver or air maintenance device shall not be required.

7.2.6.6.3 The automatic air supply to more than one dry pipe system shall be connected to enable individual maintenance of air pressure in each system.

7.2.6.6.4 A check valve or other positive backflow prevention device shall be installed in the air supply to each system to prevent airflow or waterflow from one system to another.

7.2.6.7 System Air Pressure.

7.2.6.7.1 The system air pressure shall be maintained in accordance with the instruction sheet furnished with the dry pipe valve, or shall be 20 psi (1.4 bar) in excess of the calculated trip pressure of the dry pipe valve, based on the highest normal water pressure of the system supply.

7.2.6.7.2 The permitted rate of air leakage shall be as specified in 25.2.2.

7.2.6.8 Nitrogen or Other Approved Gas.

7.2.6.8.1* Where nitrogen or other approved gas is used, the supply shall be from a reliable source.

7.2.6.8.2 Where stored nitrogen or other approved gas is used, the gas shall be introduced through a pressure regulator and shall be in accordance with 7.2.6.6.

7.2.6.8.3 A low pressure alarm shall be provided on gas storage containers to notify the need for refilling.

7.3 Preaction Systems and Deluge Systems.

7.3.1* General.

7.3.1.1* All components of pneumatic, hydraulic, or electrical systems shall be compatible.

7.3.1.2 The automatic water control valve shall be provided with hydraulic, pneumatic, or mechanical manual means for

Copyright 2014 National Fire Protection Association (NFPA). Licensed, by agreement, for individual use and download on October 4, 2014 to LEADER and READER for designated user PATTARAPORN SRITRAKOOL. No other reproduction or transmission in any form permitted without written permission of NFPA. For inquires or to report unauthorized use, contact licensing@nfpa.org.

operation that is independent of detection devices and of the sprinklers.

7.3.1.3 Pressure Gauges. Approved pressure gauges conforming with 8.17.3 shall be installed as follows:

(1) Above and below preaction valve and below deluge valve
(2) On air supply to preaction and deluge valves

7.3.1.4 A supply of spare fusible elements for heat-responsive devices, not less than two of each temperature rating, shall be maintained on the premises for replacement purposes.

7.3.1.5 Hydraulic release systems shall be designed and installed in accordance with manufacturer's requirements and listing for height limitations above deluge valves or deluge valve actuators to prevent water column.

7.3.1.6 Location and Spacing of Releasing Devices.

7.3.1.6.1 Spacing of releasing devices, including automatic sprinklers used as releasing devices, shall be in accordance with their listing and manufacturer's specifications.

7.3.1.6.2 The release system shall serve all areas that the preaction system protects.

7.3.1.6.3 Where thermal activation is utilized, the activation temperature of the release system shall be lower than the activation temperature of the sprinkler.

7.3.1.7 Devices for Test Purposes and Testing Apparatus.

7.3.1.7.1 Where detection devices installed in circuits are located where not accessible for testing, an additional detection device shall be provided on each circuit for test purposes at an accessible location and shall be connected to the circuit at a point that will ensure a proper test of the circuit.

7.3.1.7.2 Testing apparatus capable of producing the heat or impulse necessary to operate any normal detection device shall be furnished to the owner of the property with each installation.

7.3.1.7.3 Where explosive vapors or materials are present, hot water, steam, or other methods of testing not involving an ignition source shall be used.

7.3.1.7.4* A separate additional indicating control valve, supervised in accordance with 8.16.1.1.2, shall be permitted to be installed in the riser assembly above a preaction or deluge valve to permit full function trip testing as required by NFPA 25, without flooding the system.

7.3.1.8 Location and Protection of System Water Control Valves.

7.3.1.8.1 System water control valves and supply pipes shall be protected against freezing and mechanical injury.

7.3.1.8.2 Valve Rooms.

7.3.1.8.2.1 Valve rooms shall be lighted and heated.

7.3.1.8.2.2 The source of heat shall be of a permanently installed type.

7.3.1.8.2.3 Heat tracing shall not be used in lieu of heated valve enclosure rooms to protect preaction and deluge valves and supply pipe against freezing.

7.3.2 Preaction Systems.

7.3.2.1 Preaction systems shall be one of the following types:

(1) A single interlock system, which admits water to sprinkler piping upon operation of detection devices
(2) A non-interlock system, which admits water to sprinkler piping upon operation of detection devices or automatic sprinklers
(3) A double interlock system, which admits water to sprinkler piping upon operation of both detection devices and automatic sprinklers

7.3.2.2 Size of Systems — Single and Non-Interlock Preaction Systems. Not more than 1000 automatic sprinklers shall be controlled by any one preaction valve.

7.3.2.3 Size of Systems — Double Interlock Preaction Systems.

7.3.2.3.1 The system size controlled by a double interlock preaction valve shall be determined by either 7.3.2.3.1.1, 7.3.2.3.1.2, 7.3.2.3.1.3, and 7.3.2.3.1.4.

7.3.2.3.1.1 A system size for double interlock preaction systems of not more than 500 gal (1893 L) shall be permitted and shall not be required to meet any specific water delivery requirement to the trip test connection.

7.3.2.3.1.2 The system size for double interlock preaction systems shall be designed to deliver water to the system test connection in no more than 60 seconds, starting at the normal air pressure on the system, with the detection system activated and the inspection test connection fully opened simultaneously.

7.3.2.3.1.3 The system size for double interlock preaction systems shall be based on calculating water delivery in accordance with 7.2.3.6, anticipating that the detection system activation and sprinkler operation will be simultaneous.

7.3.2.3.1.4* The system size for double interlock preaction systems shall be designed to deliver water to the system trip test connection or manifold outlets in not more than the maximum time of water delivery specified in Table 7.2.3.6.1, starting at the normal air pressure on the system, with the detection system activated and the inspection trip test connection or manifold opened simultaneously.

7.3.2.3.2 A listed quick-opening device shall be permitted to be used to help meet the requirements of 7.3.2.3.1.2, 7.3.2.3.1.3, and 7.3.2.3.1.4.

7.3.2.4* Supervision.

7.3.2.4.1 Sprinkler piping and fire detection devices shall be automatically supervised where more than 20 sprinklers are on the system.

7.3.2.4.2 Except as permitted by 7.3.2.4.3, air or nitrogen supervising pressure for preaction systems shall be installed in conformance with the dry pipe system air pressure and supply rules of 7.2.6.

7.3.2.4.3 The relief valves required by 7.2.6 shall be permitted to be omitted for the type of preaction system described in 7.3.2.1(1) when the air pressure is supplied from a source that is not capable of developing pressures in excess of 15 psi (1.0 bar).

7.3.2.4.4 All preaction system types described in 7.3.2.1(2) and 7.3.2.1(3) shall maintain a minimum supervising air or nitrogen pressure of 7 psi (0.5 bar).

7.3.2.5 Sprinklers. The following sprinkler orientations and arrangements shall be permitted for preaction systems:

(1) Upright sprinklers
(2)*Listed dry sprinklers

Copyright 2014 National Fire Protection Association (NFPA). Licensed, by agreement, for individual use and download on October 4, 2014 to LEADER and READER for designated user PATTARAPORN SRITRAKOOL. No other reproduction or transmission in any form permitted without written permission of NFPA. For inquires or to report unauthorized use, contact licensing@nfpa.org.

(3) Pendent sprinklers and sidewall sprinklers installed on return bends, where the sprinklers, return bend, and branch line piping are in an area maintained at or above 40°F (4°C)
(4) Horizontal sidewall sprinklers, installed so that water is not trapped
(5) Pendent sprinklers and sidewall sprinklers, where the sprinklers and branch line piping are in an area maintained at or above 40°F (4°C), the water supply is potable, and the piping for the preaction system is copper or CPVC specifically listed for dry pipe applications

7.3.2.6 System Configuration. Preaction systems of the type described in 7.3.2.1(3) and all preaction systems protecting storage occupancies, excluding miscellaneous storage, shall not be gridded.

7.3.3* Deluge Systems.

7.3.3.1 The detection devices or systems shall be automatically supervised.

7.3.3.2 Deluge systems shall be hydraulically calculated.

7.4 Combined Dry Pipe and Preaction Systems for Piers, Terminals, and Wharves.

7.4.1 In addition to the requirements of Section 7.4, design and installation requirements for piers, terminals, and wharves shall be in accordance with Section 22.22.

7.4.2* General.

7.4.2.1* Combined automatic dry pipe and preaction systems shall be so constructed that failure of the detection system shall not prevent the system from functioning as a conventional automatic dry pipe system.

7.4.2.2 Combined automatic dry pipe and preaction systems shall be so constructed that failure of the dry pipe system of automatic sprinklers shall not prevent the detection system from properly functioning as an automatic fire alarm system.

7.4.2.3 Provisions shall be made for the manual operation of the detection system at locations requiring not more than 200 ft (61 m) of travel.

7.4.2.4 Sprinklers. The following types of sprinklers and arrangements shall be permitted for combined dry pipe and preaction systems:

(1) Upright sprinklers
(2)*Listed dry sprinklers
(3) Pendent sprinklers and sidewall sprinklers installed on return bends, where both the sprinklers and the return bends are located in a heated area
(4) Horizontal sidewall sprinklers, installed so that water is not trapped

7.4.3 Dry Pipe Valves in Combined Systems.

7.4.3.1 Where the system consists of more than 600 sprinklers or has more than 275 sprinklers in any fire area, the entire system shall be controlled through two 6 in. (150 mm) dry pipe valves connected in parallel and shall feed into a common feed main.

7.4.3.2* Where parallel dry pipe valves are required by 7.4.3.1, these valves shall be checked against each other.

7.4.3.3 Each dry pipe valve shall be provided with a listed tripping device actuated by the detection system.

7.4.3.4 Dry pipe valves shall be cross-connected through a 1 in. (25 mm) pipe connection to permit simultaneous tripping of both dry pipe valves.

7.4.3.5 The 1 in. (25 mm) cross-connection pipe shall be equipped with an indicating valve so that either dry pipe valve can be shut off and worked on while the other remains in service.

7.4.3.6 The check valves between the dry pipe valves and the common feed main shall be equipped with ½ in. (15 mm) bypasses so that a loss of air from leakage in the trimmings of a dry pipe valve will not cause the valve to trip until the pressure in the feed main is reduced to the tripping point.

7.4.3.7 An indicating valve shall be installed in each of these bypasses so that either dry pipe valve can be completely isolated from the main riser or feed main and from the other dry pipe valve.

7.4.3.8 Each combined dry pipe and preaction system shall be provided with listed quick-opening devices at the dry pipe valves.

7.4.4 Subdivision of System Using Check Valves.

7.4.4.1 Where more than 275 sprinklers are required in a single fire area, the system shall be divided into sections of 275 sprinklers or fewer by means of check valves.

7.4.4.2 Where the system is installed in more than one fire area or story, not more than 600 sprinklers shall be supplied through any one check valve.

7.4.4.3 Each section shall have a 1¼ in. (32 mm) drain on the system side of each check valve supplemented by a dry pipe system auxiliary drain.

7.4.4.4 Section drain lines and dry pipe system auxiliary drains shall be located in heated areas or inside heated cabinets to enclose drain valves and auxiliary drains for each section.

7.4.5 Time Limitation.

7.4.5.1 The sprinkler system shall be so constructed and the number of sprinklers controlled shall be so limited that water shall reach the farthest sprinkler within a period of time not exceeding 1 minute for each 400 ft (122 m) of common feed main from the time the heat-responsive system operates.

7.4.5.2 The maximum time permitted shall not exceed 3 minutes.

7.4.6 System Test Connection. The end section shall have a system test connection as required for dry pipe systems.

7.5 Multi-Cycle Systems.

7.5.1 All multi-cycle systems shall be specifically tested and listed as systems.

7.5.2 All multi-cycle systems shall be installed in compliance with the manufacturer's installation instructions.

Section 7.6 was revised by a tentative interim amendment (TIA). See page 1.

7.6* Antifreeze Systems.

7.6.1* General.

7.6.1.1 The use of antifreeze solutions shall be in conformity with state and local health regulations.

Copyright 2014 National Fire Protection Association (NFPA). Licensed, by agreement, for individual use and download on October 4, 2014 to LEADER and READER for designated user PATTARAPORN SRITRAKOOL. No other reproduction or transmission in any form permitted without written permission of NFPA. For inquires or to report unauthorized use, contact licensing@nfpa.org.

7.6.1.2 Antifreeze shall not be used in ESFR systems unless the ESFR sprinkler is listed for use with the antifreeze solution.

7.6.1.3 Where pendent sprinklers are utilized, the water shall be drained from the entire system after hydrostatic testing with water.

7.6.1.3.1 The requirements of 7.6.1.3 shall not apply where the system is hydrostatically tested with properly mixed antifreeze solution.

7.6.1.4 Where antifreeze systems are remote from the system riser, a placard shall be mounted on the system riser that indicates the number and location of all remote antifreeze systems supplied by that riser.

7.6.1.5 A placard shall be placed on the antifreeze system main valve that indicates the manufacture type and brand of the antifreeze solution, the concentration by volume of the antifreeze solution used, and the volume of the antifreeze solution used in the system.

7.6.2* Antifreeze Solutions.

7.6.2.1* Except as permitted in 7.6.2.2, antifreeze solutions shall be listed for use in sprinkler systems.

7.6.2.2 Premixed antifreeze solutions of propylene glycol shall be permitted to be used with ESFR sprinklers where the ESFR sprinklers are listed for such use in a specific application.

7.6.3 Arrangement of Supply Piping and Valves.

7.6.3.1 Where the connection between the antifreeze system and the wet pipe system does not incorporate a backflow prevention device, and the conditions of 7.6.3.5 are not met, piping and valves shall be installed as illustrated in Figure 7.6.3.1.

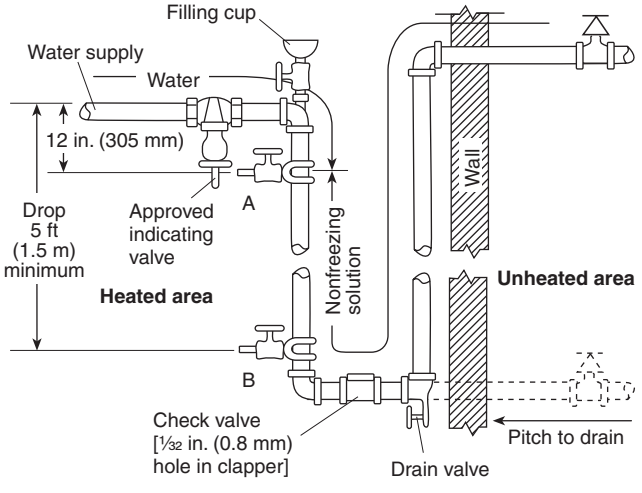

Notes:
1. Check valves are permitted to be omitted where sprinklers are below the level of valve A.
2. The 1/32 in. (0.8 mm) hole in the check valve clapper is needed to allow for expansion of the solution during a temperature rise, thus preventing damage to sprinklers.

FIGURE 7.6.3.1 Arrangement of Supply Piping and Valves.

7.6.3.2* Where the connection between the antifreeze system and the wet pipe system incorporates a backflow prevention device, and the conditions of 7.6.3.5 are not met, piping and valves shall be installed as illustrated in Figure 7.6.3.3 or Figure 7.6.3.4.

7.6.3.2.1 A means shall be provided to perform a full forward flow test in accordance with 8.17.4.6.

7.6.3.3* Where the connection between the antifreeze system and the wet pipe system incorporates a backflow prevention device, and the conditions of 7.6.3.5 are not met, a listed expansion chamber shall be provided to compensate for thermal expansion of the antifreeze solution as illustrated in Figure 7.6.3.3.

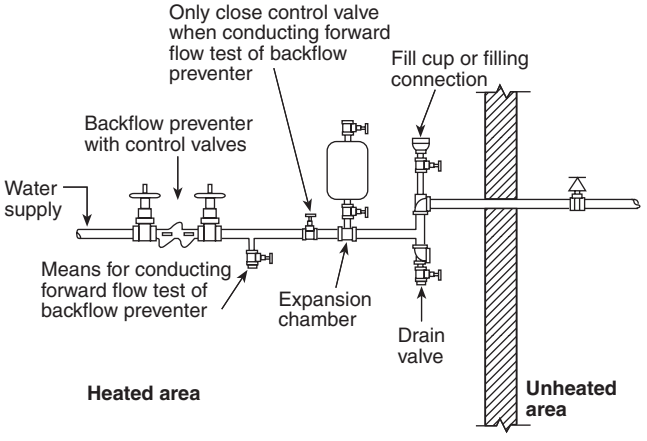

FIGURE 7.6.3.3 Arrangement of Supply Piping with Backflow Device.

7.6.3.3.1 When determining the size of the expansion chamber, the precharge air temperature and precharge air pressure shall be included.

7.6.3.3.2 The size of the expansion chamber shall be such that the maximum system pressure does not exceed the rated pressure for any components of the antifreeze system.

7.6.3.4 A listed ½ in. (12 mm) relief valve shall be permitted in lieu of the expansion chamber required in 7.6.3.3, provided the antifreeze system volume does not exceed 40 gal (151 L) as illustrated in Figure 7.6.3.4.

7.6.3.5 The requirements of paragraphs 7.6.3.1, 7.6.3.2, and 7.6.3.3 shall not apply where the following three conditions are met:

(1) The antifreeze system is provided with an automatic pressure pump or other device or apparatus to automatically maintain a higher pressure on the system side than on the supply side of the water supply check valve separating the antifreeze system from the water supply.
(2) Provision is made to automatically release solution to prevent overpressurization due to thermal expansion of the solution.
(3) Provision is made to automatically supply premixed solution as needed to restore system pressure due to thermal contraction.

7.6.3.6* A drain/test connection shall be installed at the most remote portion of the system.

7.6.3.7 For systems with a capacity larger than 150 gal (567.8 L), an additional test connection shall be provided for every 100 gal (378.5 L).

Copyright 2014 National Fire Protection Association (NFPA). Licensed, by agreement, for individual use and download on October 4, 2014 to LEADER and READER for designated user PATTARAPORN SRITRAKOOL. No other reproduction or transmission in any form permitted without written permission of NFPA. For inquires or to report unauthorized use, contact licensing@nfpa.org.

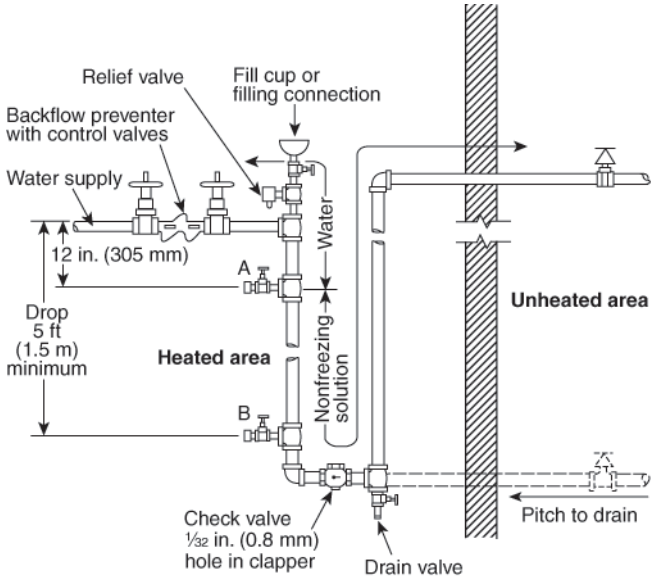

Notes:
1. Check valve can be omitted where sprinklers are below the level of valve A.
2. The 1/32 in. (0.8 mm) hole in the check valve clapper is needed to allow for expansion of the solution during a temperature rise, thus preventing damage to sprinklers.

FIGURE 7.6.3.4 Arrangement of Supply Piping with Relief Valve and Backflow Device.

7.7 Automatic Sprinkler Systems with Non–Fire Protection Connections.

7.7.1 Circulating Closed-Loop Systems.

7.7.1.1 System Components.

7.7.1.1.1 A circulating closed-loop system is primarily a sprinkler system and shall comply with all provisions of this standard such as those for control valves, area limitations of a system, alarms, fire department connections, sprinkler spacing, and so forth, except as modified by Section 7.7.

7.7.1.1.2 Piping, fittings, valves, and pipe hangers shall meet the requirements specified in Chapter 6.

7.7.1.1.3 Unless the requirements of 7.7.1.1.4 are met, a dielectric fitting shall be installed in the junction where dissimilar piping materials are joined (e.g., copper to steel).

7.7.1.1.4 Dielectric fittings shall not be required in the junction where sprinklers are connected to piping.

7.7.1.1.5 Other auxiliary devices shall not be required to be listed for sprinkler service; however, these devices, such as pumps, circulating pumps, heat exchangers, radiators, and luminaires, shall be pressure rated at 175 psi or 300 psi (12.1 bar or 20.7 bar) (rupture pressure of five times rated water system working pressure) to match the required rating of sprinkler system components.

7.7.1.1.6 Auxiliary devices shall incorporate materials of construction and be so constructed that they will maintain their physical integrity under fire conditions to avoid impairment to the fire protection system.

7.7.1.1.7 Auxiliary devices, where hung from the building structure, shall be supported independently from the sprinkler portion of the system, following recognized engineering practices.

7.7.1.2* Hydraulic Characteristics. Piping systems for attached heating and cooling equipment shall have auxiliary pumps or an arrangement made to return water to the piping system in order to ensure the following:

(1) Water for sprinklers shall not be required to pass through heating or cooling equipment.
(2) At least one direct path shall exist for waterflow from the sprinkler water supply to every sprinkler.
(3) Pipe sizing in the direct path shall be in accordance with the design requirements of this standard.
(4) No portions of the sprinkler piping shall have less than the sprinkler system design pressure, regardless of the mode of operation of the attached heating or cooling equipment.
(5) There shall be no loss or outflow of water from the system due to or resulting from the operation of heating or cooling equipment.
(6) Shutoff valves and a means of drainage shall be provided on piping to heating or cooling equipment at all points of connection to sprinkler piping and shall be installed in such a manner as to make possible repair or removal of any auxiliary component without impairing the serviceability and response to the sprinkler system.
(7) All auxiliary components, including the strainer, shall be installed on the auxiliary equipment side of the shutoff valves.

7.7.1.3 Water Temperature.

7.7.1.3.1 Maximum.

7.7.1.3.1.1 In no case shall maximum water temperature flowing through the sprinkler portion of the system exceed 120°F (49°C).

7.7.1.3.1.2 Protective control devices listed for this purpose shall be installed to shut down heating or cooling systems when the temperature of water flowing through the sprinkler portion of the system exceeds 120°F (49°C).

7.7.1.3.1.3 Where the water temperature exceeds 100°F (37.8°C), intermediate or higher temperature–rated sprinklers shall be used.

7.7.1.3.2 Minimum. Precautions shall be taken to ensure that temperatures below 40°F (4°C) are not permitted.

7.7.1.4 Obstruction to Discharge. Automatic sprinklers shall not be obstructed by auxiliary devices, piping, insulation, and so forth, from detecting fire or from proper distribution of water.

7.7.1.5 Signs.

7.7.1.5.1 Caution signs shall be attached to all valves controlling sprinklers.

7.7.1.5.2 The caution sign shall be worded as follows:

> This valve controls fire protection equipment. Do not close until after fire has been extinguished. Use auxiliary valves when necessary to shut off supply to auxiliary equipment.
>
> **CAUTION:** Automatic alarm can be sounded if this valve is closed.

7.7.1.6 Water Additives.

7.7.1.6.1 Materials added to water shall not adversely affect the fire-fighting properties of the water and shall be in conformity with any state or local health regulations.

Copyright 2014 National Fire Protection Association (NFPA). Licensed, by agreement, for individual use and download on October 4, 2014 to LEADER and READER for designated user PATTARAPORN SRITRAKOOL. No other reproduction or transmission in any form permitted without written permission of NFPA. For inquires or to report unauthorized use, contact licensing@nfpa.org.

7.7.1.6.2 Due care and caution shall be given to the use of additives that can remove or suspend scale from older piping systems.

7.7.1.6.3 Where additives are necessary for proper system operation, due care shall be taken to ensure that additives are replenished after alarm testing or whenever water is removed from the system.

7.7.1.7 Waterflow Detection.

7.7.1.7.1 The supply of water from sprinkler piping through auxiliary devices, circulatory piping, and pumps shall not under any condition or operation, transient or static, cause false sprinkler waterflow signals.

7.7.1.7.2 A sprinkler waterflow signal shall not be impaired when water is discharged through an opened sprinkler or through the system test connection while auxiliary equipment is in any mode of operation (on, off, transient, stable).

7.8 Outside Sprinklers for Protection Against Exposure Fires (Exposure Protection Sprinkler Systems).

7.8.1 Applications.

7.8.1.1 Exposure protection sprinkler systems shall be permitted on buildings and structures regardless of whether the building's interior is protected by a sprinkler system.

7.8.1.2 Where exposure protection systems are required, they shall be installed to provide protection of windows and other openings within masonry walls, complete protection of walls, protection of roofs, or any combination thereof.

7.8.2 Water Supply and Control.

7.8.2.1 Unless the requirements of 7.8.2.2 are met, sprinklers installed for protection against exposure fires shall be supplied from a standard water supply as outlined in Chapter 24.

7.8.2.2 Where approved, other supplies, such as manual valves or pumps or fire department connections, shall be permitted to supply water to sprinklers for exposure protection.

7.8.2.3 Where fire department connections are used for water supply, they shall be so located that they will not be affected by the exposing fire.

7.8.3 Control.

7.8.3.1 Each system of outside sprinklers shall have an independent control valve.

7.8.3.2 Manually controlled open sprinklers shall be used only where constant supervision is present.

7.8.3.3 Sprinklers shall be of the open or automatic type.

Paragraph 7.8.3.4 was revised by a tentative interim amendment (TIA). See page 1.

7.8.3.4 Automatic sprinklers in areas subject to freezing shall be on dry pipe systems conforming to Section 7.2 or antifreeze systems conforming to Section 7.6, or be dry sprinklers of an adequate length connected to wet pipe systems located in heated areas.

7.8.3.5 Automatic systems of open sprinklers shall be controlled by the operation of fire detection devices designed for the specific application.

7.8.4 System Components.

7.8.4.1 Drain Valves. Each system of outside sprinklers shall have a separate drain valve installed on the system side of each control valve, except where an open sprinkler, top-fed system is arranged to facilitate drainage.

7.8.4.2 Check Valves.

7.8.4.2.1* Where sprinklers are installed on two adjacent sides of a building, protecting against two separate and distinct exposures, with separate control valves for each side, the end lines shall be connected with check valves located so that one sprinkler around the corner will operate.

7.8.4.2.2 The intermediate pipe between the two check valves shall be arranged to drain.

7.8.4.2.3* As an alternate solution, an additional sprinkler shall be installed on each system located around the corner from the system involved.

7.8.4.3 System Arrangement. Where one exposure affects two sides of the protected structure, the system shall not be subdivided between the two sides but rather shall be arranged to operate as a single system.

7.8.5 Pipe and Fittings. Pipe and fittings installed on the exterior of the building or structure shall be corrosion resistant.

7.8.6 Strainers. A listed strainer shall be provided in the riser or feed main that supplies sprinklers having nominal K-factors smaller than K-2.8 (40).

7.8.7 Gauge Connections. A listed pressure gauge conforming with 8.17.3 shall be installed immediately below the control valve of each system.

7.8.8 Sprinklers.

7.8.8.1 A single line of sprinklers is permitted to protect a maximum of two stories of wall area or two levels of vertically aligned windows where architectural features are sufficiently flush to allow rundown.

7.8.8.2 Where window sills or similar features result in recesses or projections exceeding 1 in. (25.4 mm) in depth, separate sprinklers shall be provided for each window on each level, regardless of whether protection is being provided for windows or complete walls.

7.8.8.3 For wall protection systems, sprinklers shall be located 6 in. to 12 in. (152 mm to 305 mm) from the wall surface and within 6 in. (152 mm) of the top of the wall, with maximum spacing of 8 ft (2.44 m) or as indicated in the sprinkler listing for exposure protection use.

7.8.8.4 For protection of window and similar openings, listed window sprinklers shall be positioned within 2 in. (50.8 mm) of the top of the window sash in accordance with Table 7.8.8.4.

7.8.8.5 Where exposure protection sprinkler systems are installed, listed cornice sprinklers shall be used to protect combustible cornices exceeding 12 in. (305 mm) in depth.

7.8.8.5.1 Cornice sprinklers shall be installed in each bay formed by cornice features and shall be spaced up to a maximum distance of 10 ft (3.05 m) apart, with deflectors 8 in. (203 mm) below the underside of the roof sheathing.

7.8.8.6 Open spray sprinklers (upright, pendent, or sidewall) shall be permitted for application in roof protection when installed in accordance with ordinary hazard Group 1 protection

Copyright 2014 National Fire Protection Association (NFPA). Licensed, by agreement, for individual use and download on October 4, 2014 to LEADER and READER for designated user PATTARAPORN SRITRAKOOL. No other reproduction or transmission in any form permitted without written permission of NFPA. For inquires or to report unauthorized use, contact licensing@nfpa.org.

Table 7.8.8.4 Position of Window Sprinklers

Width of Window (ft)	Nominal K-Factor		Nominal Distance from Window (in.)
	U.S.	Metric	
Up to 3	2.8	40	7
>3 to 4	2.8	40	8
>4 to 5	2.8	40	9
	5.6	80	12
>5 to 7	11.2	160	12
	Two 2.8	40	7
>7 to 9.5	14.0	200	12
	Two 2.8	40	9
>9.5 to 12	Two 5.6	80	12

For SI units, 1 ft = 0.3048 m.

areas and discharge criteria, with deflectors aligned parallel to the slope and positioned a minimum 18 in. (457 mm) above the roof surface.

7.8.8.6.1 Upright sprinklers positioned as ridge pole sprinklers shall be permitted with their deflectors horizontal and minimum 6 in. (152 mm) above the ridge, with their maximum spacing and protection areas determined in the plan view rather than along the slope.

7.9* Refrigerated Spaces.

7.9.1 Spaces Maintained at Temperatures Above 32°F (0°C). Where temperatures are maintained above 32°F (0°C) in refrigerated spaces, the requirements in this section shall not apply.

7.9.2* Spaces Maintained at Temperatures Below 32°F (0°C).

7.9.2.1 General.

7.9.2.1.1 Where sprinkler pipe passes through a wall or floor into the refrigerated space, a section of pipe arranged for removal shall be provided immediately inside the space.

7.9.2.1.2 The removable length of pipe required in 7.9.2.1.1 shall be a minimum of 30 in. (762 mm).

7.9.2.2 Low Air Pressure Alarm.

7.9.2.2.1 Unless the requirements of 7.9.2.2.2 are met, a low air pressure alarm to a constantly attended location shall be installed.

7.9.2.2.2 Systems equipped with local low pressure alarms and an automatic air maintenance device shall not be required to alarm to a constantly attended location.

7.9.2.3 Piping Pitch. Piping in refrigerated spaces shall be installed with pitch as outlined in 8.16.2.3.3.

7.9.2.4* Air or Nitrogen Supply. Air or nitrogen supply for systems shall be one of the following:

(1) Air from the room of lowest temperature to reduce the moisture content
(2) Air compressor/dryer package listed for the application utilizing ambient air
(3) Compressed nitrogen gas from cylinders used in lieu of compressed air

7.9.2.5* Control Valve. An indicating-type control valve for operational testing of the system shall be provided on each sprinkler riser outside of the refrigerated space.

7.9.2.6* Check Valve.

7.9.2.6.1 Unless the requirements of 7.9.2.6.2 are met, a check valve with a 3⁄32 in. (2.4 mm) diameter hole in the clapper shall be installed in the system riser below the test valve required in 7.9.2.5.

7.9.2.6.2 Check valves shall not be required where dry pipe or preaction valves are used and designed to completely drain all water above the seat and that are listed for installation without priming water remaining and where priming water is not used in the system riser.

7.9.2.7* Air or Nitrogen Supply Piping.

7.9.2.7.1 The air or nitrogen supply piping entering the freezer area shall be as stated in 7.9.2.7.1.1 and 7.9.2.7.1.2.

7.9.2.7.1.1 Air Supply. The supply piping shall be equipped with two easily removable supply lines at least 6 ft (1.9 m) long and at least 1 in. (25 mm) in diameter as shown in Figure 7.9.2.7.1.1(a) or Figure 7.9.2.7.1.1(b).

7.9.2.7.1.2 Nitrogen Supply. The supply piping shall be equipped with a single easily removable supply line at least 6 ft (1.9 m) long and at least 1 in. (25 mm) in diameter.

7.9.2.7.2 Each supply line shall be equipped with control valves located in the warm area.

7.9.2.7.3 Only one air supply line shall be open to supply the system air at any one time.

7.9.2.8 Fire Detection for Preaction Release.

7.9.2.8.1 Detectors for Preaction Systems.

7.9.2.8.1.1* The release system shall be designed to operate prior to sprinkler operation, unless detectors meet the requirements of 7.9.2.8.1.2.

(A) Detectors shall be electric or pneumatic fixed temperature type with temperature ratings less than that of the sprinklers.

(B) Detection devices shall not be rate-of-rise type.

7.9.2.8.1.2 Where the system is a double interlock preaction system or single interlock preaction antifreeze system, detection devices shall be permitted to be any type specifically approved for use in a refrigerated area if installed in accordance with their listing requirements and *NFPA 72*.

7.9.2.8.2 Detector Location at Ceiling.

7.9.2.8.2.1 Under smooth ceilings, detectors shall be spaced not exceeding their listed spacing.

7.9.2.8.2.2 For other than smooth ceilings, detectors shall not exceed one-half of the listed linear detector spacing or full allowable sprinkler spacing, whichever is greater.

7.9.2.8.3 Detector Location in Racks.

7.9.2.8.3.1 Unless conditions in 7.9.2.8.4 are met, one level of detectors shall be installed for each level of sprinklers.

Copyright 2014 National Fire Protection Association (NFPA). Licensed, by agreement, for individual use and download on October 4, 2014 to LEADER and READER for designated user PATTARAPORN SRITRAKOOL. No other reproduction or transmission in any form permitted without written permission of NFPA. For inquires or to report unauthorized use, contact licensing@nfpa.org.

7.9.2.8.3.2 Detectors shall be installed vertically within one storage level of the rack sprinklers and as follows:

(1) Detectors shall be located in the transverse flue in single-row racks and in the longitudinal flue in double-row racks.
(2) For multiple-row racks, detectors shall be located in either longitudinal or transverse flue space and shall be within 5 ft (1.5 m) horizontally of each sprinkler.
(3) Separate detection systems shall be installed for ceiling sprinkler systems and in-rack sprinkler systems.
(4) Where system is double interlock preaction type, ceiling detection system shall operate solenoid valves on both ceiling and in-rack preaction systems.

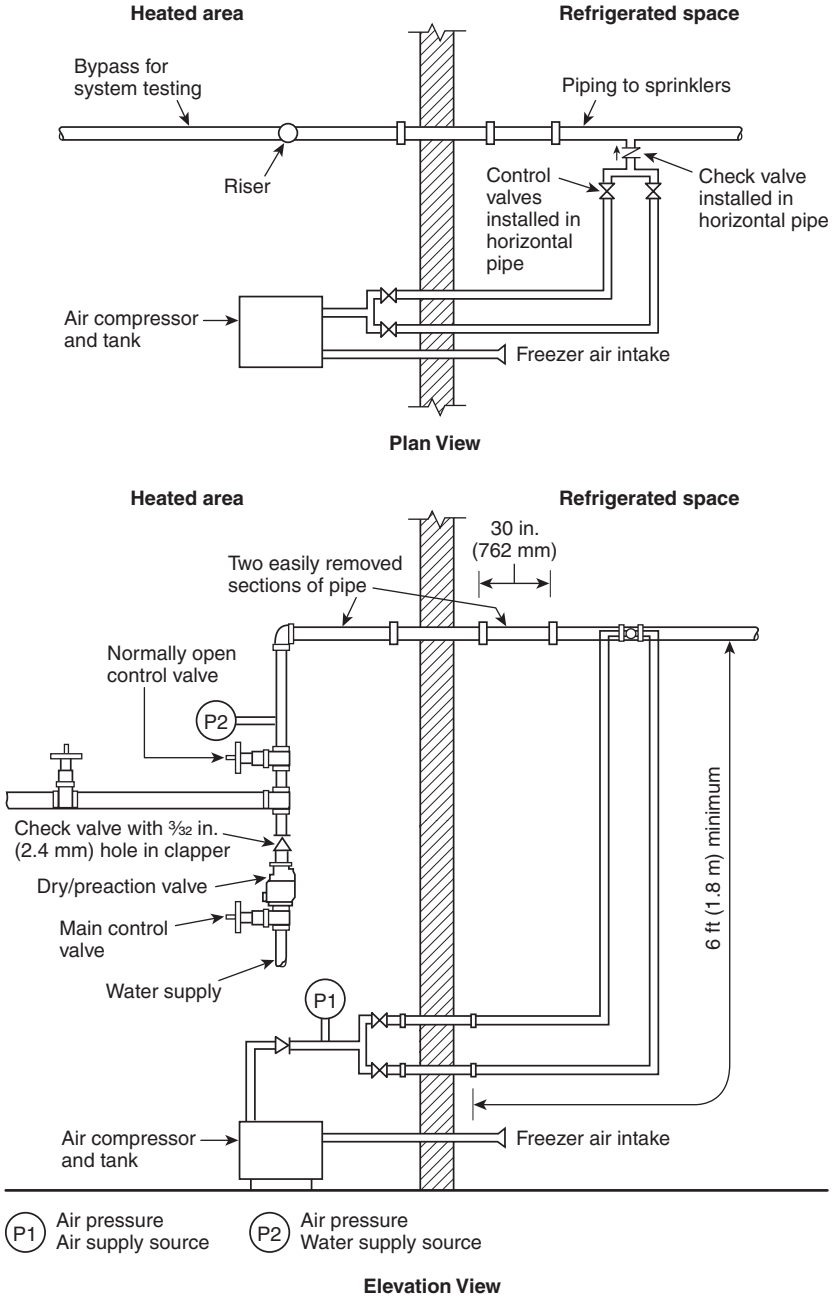

Notes:
1. Check valve with 3/32 in. (2.4 mm) hole in clapper not required if prime water not used.
2. Supply air to be connected to top or side of system pipe.
3. Each removable air line to be a minimum of 1 in. (25 mm) diameter and a minimum of 6 ft (1.8 m) long.

FIGURE 7.9.2.7.1.1(a) Refrigerator Area Sprinkler System Used to Minimize the Chances of Developing Ice Plugs.

Copyright 2014 National Fire Protection Association (NFPA). Licensed, by agreement, for individual use and download on October 4, 2014 to LEADER and READER for designated user PATTARAPORN SRITRAKOOL. No other reproduction or transmission in any form permitted without written permission of NFPA. For inquires or to report unauthorized use, contact licensing@nfpa.org.

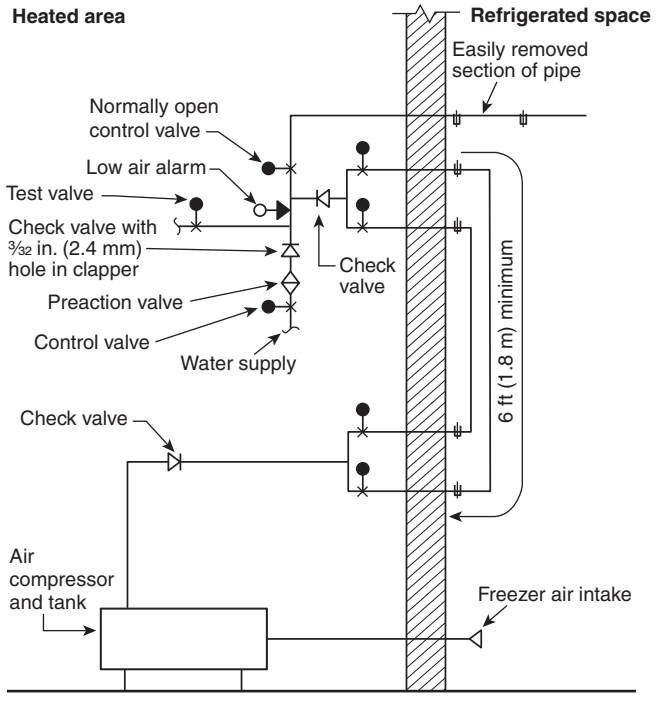

Notes:
1. Check valve with 3/32 in. (2.4 mm) hole in clapper not required if prime water not used.
2. Each removable air line is to be installed a minimum of 1 in. (25 mm) in diameter and a minimum of 6 ft (1.8 m) long.

FIGURE 7.9.2.7.1.1(b) Preaction System Arrangement.

7.9.2.8.4 Single Detection System for Ceiling and In-Rack Sprinklers. Ceiling detection only shall be permitted where all of the following conditions are met:

(1) Maximum storage height is 35 ft (10.7 m).
(2) Maximum ceiling height is 40 ft (12.2 m).
(3) Maximum hazard of storage is Class III.
(4) No solid shelves are present.
(5) One preaction valve is used for both ceiling and in-rack sprinklers protecting the same area, with separate indicating control valves and check valves provided downstream as shown in Figure 7.9.2.8.4.
(6) Detectors at the ceiling are spaced at a maximum of one-half the listed detector spacing but not less than the sprinkler spacing.

7.10 Commercial-Type Cooking Equipment and Ventilation.

7.10.1 General. In cooking areas protected by automatic sprinklers, additional sprinklers or automatic spray nozzles shall be provided to protect commercial-type cooking equipment and ventilation systems that are designed to carry away grease-laden vapors unless otherwise protected.

7.10.2* Sprinklers and Automatic Spray Nozzles.

7.10.2.1 Unless the requirements of 7.10.2.2 are met, standard sprinklers or automatic spray nozzles shall be so located as to provide for the protection of exhaust ducts, hood exhaust duct collars, and hood exhaust plenum chambers.

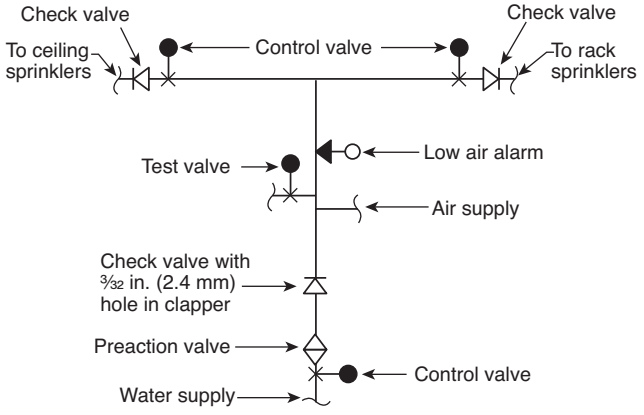

FIGURE 7.9.2.8.4 Valve Arrangement.

7.10.2.2 Sprinklers or automatic spray nozzles in ducts, duct collars, and plenum chambers shall not be required where all cooking equipment is served by listed grease extractors.

7.10.2.3 Unless the requirements of 7.10.2.5 are met, standard sprinklers or automatic spray nozzles shall be so located as to provide for the protection of cooking equipment and cooking surfaces.

7.10.2.4 Hoods containing automatic fire-extinguishing systems are protected areas; therefore, these hoods are not considered obstructions to overhead sprinkler systems and shall not require floor coverage underneath.

7.10.2.5 Cooking equipment below hoods that contain automatic fire-extinguishing equipment is protected and shall not require protection from the overhead sprinkler system.

7.10.3 Sprinkler and Automatic Spray Nozzle Location — Ducts.

7.10.3.1 Unless the requirements of 7.10.3.2 or 7.10.3.4 are met, exhaust ducts shall have one sprinkler or automatic spray nozzle located at the top of each vertical riser and at the midpoint of each offset.

7.10.3.2 Sprinklers or automatic spray nozzles shall not be required in a vertical riser located outside of a building, provided the riser does not expose combustible material or provided the interior of the building and the horizontal distance between the hood outlet and the vertical riser is at least 25 ft (7.6 m).

7.10.3.3 Unless the requirements of 7.10.3.4 are met, horizontal exhaust ducts shall have sprinklers or automatic spray nozzle devices located on 10 ft (3 m) centers beginning no more than 5 ft (1.5 m) from the duct entrance.

7.10.3.4 Sprinklers or automatic spray nozzles shall be required in ducts.

7.10.3.4.1 Where ducts do not exceed 75 ft (22.86 m) in length and the entire exhaust duct is protected in accordance with NFPA 96, sprinkler(s) or automatic spray nozzle(s) shall not be required.

7.10.3.5 A sprinkler(s) or an automatic spray nozzle(s) in exhaust ducts subject to freezing shall be properly protected against freezing by approved means. *(See 8.16.4.1.)*

Copyright 2014 National Fire Protection Association (NFPA). Licensed, by agreement, for individual use and download on October 4, 2014 to LEADER and READER for designated user PATTARAPORN SRITRAKOOL. No other reproduction or transmission in any form permitted without written permission of NFPA. For inquires or to report unauthorized use, contact licensing@nfpa.org.

7.10.4 Sprinkler and Automatic Spray Nozzle Location — Duct Collar.

7.10.4.1 Each hood exhaust duct collar shall have one sprinkler or automatic spray nozzle located 1 in. minimum to 12 in. maximum (25 mm minimum to 305 mm maximum) above the point of duct collar connection in the hood plenum.

7.10.4.2 Hoods that have listed fire dampers located in the duct collar shall be protected with a sprinkler or automatic spray nozzle located on the discharge side of the damper and shall be so positioned as not to interfere with damper operation.

7.10.5 Sprinkler and Automatic Spray Nozzle Location — Exhaust Plenum Chambers.

7.10.5.1 Hood exhaust plenum chambers shall have one sprinkler or automatic spray nozzle centered in each chamber not exceeding 10 ft (3 m) in length.

7.10.5.2 Plenum chambers greater than 10 ft (3 m) in length shall have two sprinklers or automatic spray nozzles evenly spaced, with the maximum distance between the two sprinklers not to exceed 10 ft (3 m).

7.10.6 Sprinkler and Automatic Spray Nozzle Temperature Ratings and K-Factors.

7.10.6.1 Where the exposed temperature is expected to be 300°F (149°C) or less, sprinklers or automatic spray nozzles being used in duct, duct collar, and plenum areas shall be of the extra high–temperature classification [325°F to 375°F (163°C to 191°C)].

7.10.6.2 When use of a temperature-measuring device indicates temperatures above 300°F (149°C), a sprinkler or automatic spray nozzle of higher classification shall be used.

7.10.6.3 Sprinklers or automatic spray nozzles being used in duct, duct collar, and plenum areas shall have orifices with K-factors not less than K-1.4 (20) and not more than K-5.6 (80).

7.10.7 Sprinkler and Automatic Spray Nozzle. Access shall be provided to all sprinklers or automatic spray nozzles for examination and replacement.

7.10.8 Cooking Equipment.

7.10.8.1 General. Cooking equipment (such as deep fat fryers, ranges, griddles, and broilers) that is considered to be a source of ignition shall be protected in accordance with the provisions of 7.10.1.

7.10.8.2 Deep Fat Fryers.

7.10.8.2.1 A sprinkler or automatic spray nozzle used for protection of deep fat fryers shall be listed for that application.

7.10.8.2.2 The position, arrangement, location, and water supply for each sprinkler or automatic spray nozzle shall be in accordance with its listing.

7.10.8.3 Fuel and Heat Shutoff.

7.10.8.3.1 The operation of any cooking equipment sprinkler or automatic spray nozzle shall automatically shut off all sources of fuel and heat to all equipment requiring protection.

7.10.8.3.2 Any gas appliance not requiring protection but located under ventilating equipment shall also be shut off.

7.10.8.3.3 All shutdown devices shall be of the type that requires manual resetting prior to fuel or power being restored.

7.10.9 Indicating Valves. A listed indicating valve shall be installed in the water supply line to the sprinklers and spray nozzles protecting the cooking and ventilating system.

7.10.10 Strainers. A listed line strainer shall be installed in the main water supply preceding sprinklers or automatic spray nozzles having nominal K-factors smaller than K-2.8 (40).

7.10.11 Test Connection. A system test connection shall be provided to verify proper operation of equipment specified in 7.10.8.3.

7.11 Additives and Coatings.

7.11.1 Additives to the water supply intended for control of microbiological or other corrosion shall be listed for use within fire sprinkler systems.

7.11.2 Internal pipe coatings, excluding galvanizing, intended for control of microbiological or other corrosion shall be listed for use within fire sprinkler systems.

Chapter 8 Installation Requirements

8.1* Basic Requirements.

8.1.1* The requirements for spacing, location, and position of sprinklers shall be based on the following principles:

(1) Sprinklers shall be installed throughout the premises.
(2) Sprinklers shall be located so as not to exceed the maximum protection area per sprinkler.
(3)*Sprinklers shall be positioned and located so as to provide satisfactory performance with respect to activation time and distribution.
(4) Sprinklers shall be permitted to be omitted from areas specifically allowed by this standard.
(5) When sprinklers are specifically tested and test results demonstrate that deviations from clearance requirements to structural members do not impair the ability of the sprinkler to control or suppress a fire, their positioning and locating in accordance with the test results shall be permitted.
(6) Clearance between sprinklers and ceilings exceeding the maximums specified in this standard shall be permitted, provided that tests or calculations demonstrate comparable sensitivity and performance of the sprinklers to those installed in conformance with these sections.
(7) Furniture, such as portable wardrobe units, cabinets, trophy cases, and similar features not intended for occupancy, does not require sprinklers to be installed in them. This type of feature shall be permitted to be attached to the finished structure.
(8)*Sprinklers shall not be required to be installed within electrical equipment, mechanical equipment, or air handling units not intended for occupancy.

8.1.2* System valves and gauges shall be accessible for operation, inspection, tests, and maintenance.

8.2 System Protection Area Limitations.

8.2.1 The maximum floor area on any one floor to be protected by sprinklers supplied by any one sprinkler system riser or combined system riser shall be as follows:

(1) Light hazard — 52,000 ft^2 (4831 m^2)
(2) Ordinary hazard — 52,000 ft^2 (4831 m^2)

Copyright 2014 National Fire Protection Association (NFPA). Licensed, by agreement, for individual use and download on October 4, 2014 to LEADER and READER for designated user PATTARAPORN SRITRAKOOL. No other reproduction or transmission in any form permitted without written permission of NFPA. For inquires or to report unauthorized use, contact licensing@nfpa.org.

(3)*Extra hazard — Hydraulically calculated — 40,000 ft^2 (3716 m^2)

(4) Storage — High-piled storage (as defined in 3.9.1.17) and storage covered by other NFPA standards — 40,000 ft^2 (3716 m^2)

8.2.2 The floor area occupied by mezzanines shall not be included in the area limits of 8.2.1.

8.2.3 Where single systems protect extra hazard, high-piled storage, or storage covered by other NFPA standards, and ordinary or light hazard areas, the extra hazard or storage area coverage shall not exceed the floor area specified for that hazard and the total area coverage shall not exceed 52,000 ft^2 (4831 m^2).

8.2.4 Multiple buildings attached by canopies, covered breezeways, common roofs, or a common wall(s) shall be permitted to be supplied by a single fire sprinkler riser.

8.2.4.1 The maximum system size shall comply with 8.2.1.

8.2.5* Detached Buildings.

8.2.5.1 Unless the requirements of 8.2.5.2 apply, detached buildings, regardless of separation distance, that do not meet the criteria of 8.2.4 shall be provided with separate fire sprinkler systems.

8.2.5.2 When acceptable to the authority having jurisdiction, detached structures shall be permitted to be supplied by the fire sprinkler system of an adjacent building.

8.3 Use of Sprinklers.

8.3.1 General.

8.3.1.1* Sprinklers shall be installed in accordance with their listing.

8.3.1.2 The requirements of 8.3.1.1 shall not apply where construction features or other special situations require unusual water distribution, and listed sprinklers shall be permitted to be installed in positions other than anticipated by their listing to achieve specific results.

8.3.1.3* Upright sprinklers shall be installed with the frame arms parallel to the branch line, unless specifically listed for other orientation.

8.3.1.4 Where solvent cement is used as the pipe and fittings bonding agent, sprinklers shall not be installed in the fittings prior to the fittings being cemented in place.

8.3.1.5 Protective Caps and Straps.

8.3.1.5.1* Protective caps and straps shall be removed using means that are in accordance with the manufacturer's installation instructions.

8.3.1.5.2* Protective caps and straps shall be removed from all sprinklers prior to the time when the sprinkler system is placed in service.

8.3.1.5.3 Protective caps and straps on all upright sprinklers or on any sprinklers installed more than 10 ft (3 m) above the floor shall be permitted to be removed from sprinklers immediately following their installation.

8.3.2 Temperature Ratings.

8.3.2.1* Unless the requirements of 8.3.2.2, 8.3.2.3, 8.3.2.4, or 8.3.2.5 are met, ordinary- and intermediate-temperature sprinklers shall be used throughout buildings.

8.3.2.2 Where maximum ceiling temperatures exceed 100°F (38°C), sprinklers with temperature ratings in accordance with the maximum ceiling temperatures of Table 6.2.5.1 shall be used.

8.3.2.3 High-temperature sprinklers shall be permitted to be used throughout ordinary and extra hazard occupancies, storage occupancies, and as allowed in this standard and other NFPA codes and standards.

8.3.2.4 Sprinklers of intermediate- and high-temperature classifications shall be installed in specific locations as required by 8.3.2.5.

8.3.2.5* The following practices shall be observed to provide sprinklers of other than ordinary-temperature classification unless other temperatures are determined or unless high-temperature sprinklers are used throughout, and temperature selection shall be in accordance with Table 8.3.2.5(a), Table 8.3.2.5(b), and Figure 8.3.2.5:

(1) Sprinklers in the high-temperature zone shall be of the high-temperature classification, and sprinklers in the intermediate-temperature zone shall be of the intermediate-temperature classification.

(2) Sprinklers located within 12 in. (305 mm) to one side or 30 in. (762 mm) above an uncovered steam main, heating coil, or radiator shall be of the intermediate-temperature classification.

(3) Sprinklers within 7 ft (2.1 m) of a low-pressure blowoff valve that discharges free in a large room shall be of the high-temperature classification.

(4) Sprinklers under glass or plastic skylights exposed to the direct rays of the sun shall be of the intermediate-temperature classification.

(5) Sprinklers in an unventilated, concealed space, under an uninsulated roof, or in an unventilated attic shall be of the intermediate-temperature classification.

(6) Sprinklers in unventilated show windows having high-powered electric lights near the ceiling shall be of the intermediate-temperature classification.

(7) Sprinklers protecting commercial-type cooking equipment and ventilation systems shall be of the high- or extra high–temperature classification as determined by use of a temperature-measuring device. *(See 7.10.6.)*

(8) Sprinklers protecting residential areas installed near specific heat sources identified in Table 8.3.2.5(c) shall be installed in accordance with Table 8.3.2.5(c).

(9) Ordinary-temperature sprinklers located adjacent to a heating duct that discharges air that is less than 100°F (38°C) are not required to be separated in accordance with Table 8.3.2.5(a).

(10) Sprinklers in walk-in type coolers and freezers with automatic defrosting shall be of the intermediate-temperature classification or higher.

8.3.2.6 In case of occupancy change involving temperature change, the sprinklers shall be changed accordingly.

8.3.2.7* The minimum temperature rating of ceiling sprinklers in general storage, rack storage, rubber tire storage, roll paper storage, and baled cotton storage applications shall be 150°F (66°C).

Copyright 2014 National Fire Protection Association (NFPA). Licensed, by agreement, for individual use and download on October 4, 2014 to LEADER and READER for designated user PATTARAPORN SRITRAKOOL. No other reproduction or transmission in any form permitted without written permission of NFPA. For inquires or to report unauthorized use, contact licensing@nfpa.org.

Table 8.3.2.5(a) Temperature Ratings of Sprinklers Based on Distance from Heat Sources

Type of Heat Condition	Ordinary-Temperature Rating	Intermediate-Temperature Rating	High-Temperature Rating
(1) Heating ducts			
(a) Above	More than 2 ft 6 in.	2 ft 6 in. or less	
(b) Side and below	More than 1 ft 0 in.	1 ft 0 in. or less	
(c) Diffuser	Any distance except as shown under Intermediate-Temperature Rating column	*Downward discharge:* Cylinder with 1 ft 0 in. radius from edge extending 1 ft 0 in. below and 2 ft 6 in. above *Horizontal discharge:* Semicylinder or cylinder with 2 ft 6 in. radius in direction of flow extending 1 ft 0 in. below and 2 ft 6 in. above	
(2) Unit heater			
(a) Horizontal discharge		*Discharge side:* 7 ft 0 in. to 20 ft 0 in. radius pie-shaped cylinder *(see Figure 8.3.2.5)* extending 7 ft 0 in. above and 2 ft 0 in. below heater; also 7 ft 0 in. radius cylinder more than 7 ft 0 in. above unit heater	7 ft 0 in. radius cylinder extending 7 ft 0 in. above and 2 ft 0 in. below unit heater
(b) Vertical downward discharge *(for sprinklers below unit heater, see Figure 8.3.2.5)*		7 ft 0 in. radius cylinder extending upward from an elevation 7 ft 0 in. above unit heater	7 ft 0 in. radius cylinder extending from the top of the unit heater to an elevation 7 ft 0 in. above unit heater
(3) Steam mains (uncovered)			
(a) Above	More than 2 ft 6 in.	2 ft 6 in. or less	
(b) Side and below	More than 1 ft 0 in.	1 ft 0 in. or less	
(c) Blowoff valve	More than 7 ft 0 in.		7 ft 0 in. or less

For SI units, 1 in. = 25.4 mm; 1 ft = 0.3048 m.

Table 8.3.2.5(b) Temperature Ratings of Sprinklers in Specified Locations

Location	Ordinary-Temperature Rating	Intermediate-Temperature Rating	High-Temperature Rating
Skylights		Glass or plastic	
Attics	Do not use	Ventilated or unventilated	
Peaked roof: metal or thin boards, concealed or not concealed, insulated or uninsulated	Ventilated	Unventilated	
Flat roof: metal, not concealed	Ventilated or unventilated	Note: For uninsulated roof, climate and insulated or uninsulated occupancy can necessitate intermediate sprinklers. Check on job.	
Flat roof: metal, concealed, insulated or uninsulated	Ventilated	Unventilated	
Show windows	Ventilated	Unventilated	

Note: A check of job condition by means of thermometers might be necessary.

Copyright 2014 National Fire Protection Association (NFPA). Licensed, by agreement, for individual use and download on October 4, 2014 to LEADER and READER for designated user PATTARAPORN SRITRAKOOL. No other reproduction or transmission in any form permitted without written permission of NFPA. For inquires or to report unauthorized use, contact licensing@nfpa.org.

Table 8.3.2.5(c) Temperature Ratings of Sprinklers in Specified Residential Areas

Heat Source	Minimum Distance from Edge of Source to Ordinary-Temperature Sprinkler		Minimum Distance from Edge of Source to Intermediate-Temperature Sprinkler	
	in.	mm	in.	mm
Side of open or recessed fireplace	36	914	12	305
Front of recessed fireplace	60	1524	36	914
Coal- or wood-burning stove	42	1067	12	305
Kitchen range	18	457	9	229
Wall oven	18	457	9	229
Hot air flues	18	457	9	229
Uninsulated heat ducts	18	457	9	229
Uninsulated hot water pipes	12	305	6	152
Side of ceiling- or wall-mounted hot air diffusers	24	607	12	305
Front of wall-mounted hot air diffusers	36	914	18	457
Hot water heater or furnace	6	152	3	76
Light fixture:				
0 W–250 W	6	152	3	76
250 W–499 W	12	305	6	152

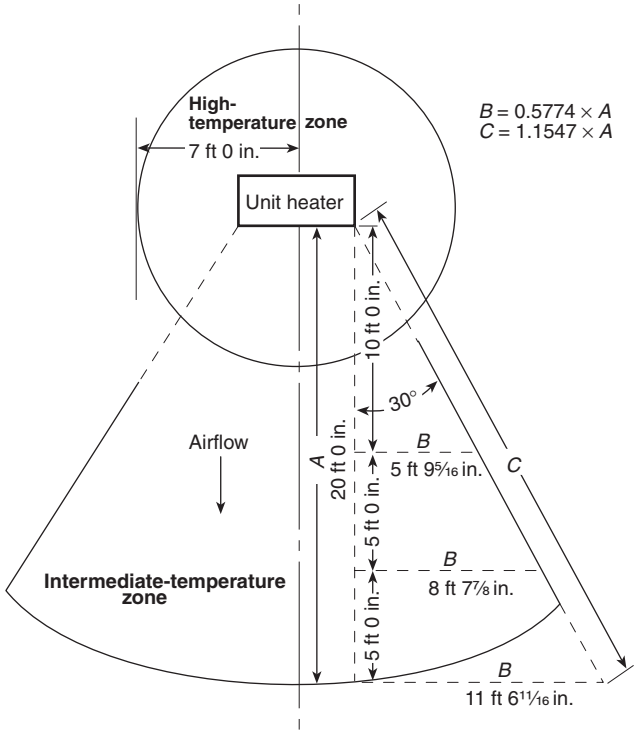

SI units; 1 in. = 25.4 mm; 1 ft = 0.31 m.

FIGURE 8.3.2.5 High-Temperature and Intermediate-Temperature Zones at Unit Heaters.

8.3.3 Thermal Sensitivity.

8.3.3.1* Sprinklers in light hazard occupancies shall be one of the following:

(1) Quick-response type as defined in 3.6.4.7
(2) Residential sprinklers in accordance with the requirements of 8.4.5
(3) Standard-response sprinklers used for modifications or additions to existing light hazard systems equipped with standard-response sprinklers
(4) Standard-response sprinklers used where individual standard-response sprinklers are replaced in existing light hazard systems

8.3.3.2 Where quick-response sprinklers are installed, all sprinklers within a compartment shall be quick-response unless otherwise permitted in 8.3.3.3.

8.3.3.3 Where there are no listed quick-response sprinklers in the temperature range required, standard-response sprinklers shall be permitted to be used.

8.3.3.4 When existing light hazard systems are converted to use quick-response or residential sprinklers, all sprinklers in a compartment shall be changed.

8.3.4 Sprinklers with K-Factors Less than K-5.6 (80).

8.3.4.1 Sprinklers shall have a minimum nominal K-factor of 5.6 (80) unless otherwise permitted by 8.3.4.

8.3.4.2 For light hazard occupancies not requiring as much water as is discharged by a sprinkler with a nominal K-factor of K-5.6 (80) operating at 7 psi (0.5 bar), sprinklers having a smaller orifice shall be permitted, subject to the following restrictions:

(1) The system shall be hydraulically calculated.
(2) Sprinklers with nominal K-factors of less than K-5.6 (80) shall be installed only in wet pipe sprinkler systems or in accordance with the limitations of 8.3.4.3 or 8.3.4.4.

Copyright 2014 National Fire Protection Association (NFPA). Licensed, by agreement, for individual use and download on October 4, 2014 to LEADER and READER for designated user PATTARAPORN SRITRAKOOL. No other reproduction or transmission in any form permitted without written permission of NFPA. For inquires or to report unauthorized use, contact licensing@nfpa.org.

(3) A listed strainer shall be provided on the supply side of sprinklers with nominal K-factors of less than K-2.8 (40).

8.3.4.3 Sprinklers with nominal K-factors of less than K-5.6 (80) shall be permitted to be installed in conformance with 11.3.2 for protection against exposure fires.

8.3.4.4 Sprinklers with nominal K-factors of K-4.2 (57) shall be permitted to be installed on dry pipe and preaction systems protecting light hazard occupancies where piping is corrosion resistant or internally galvanized.

8.3.5 Thread Size Limitations. Sprinklers having a K-factor exceeding K-5.6 (80) and having ½ in. (15 mm) National Pipe Thread (NPT) shall not be installed in new sprinkler systems.

8.4* Application of Sprinkler Types. Sprinklers shall be selected for use as indicated in this section and shall be positioned and spaced as described in Section 8.5.

8.4.1 Standard Upright and Pendent Spray Sprinklers.

8.4.1.1 Upright and pendent spray sprinklers shall be permitted in all occupancy hazard classifications and building construction types.

8.4.1.2 Quick-response sprinklers shall not be permitted for use in extra hazard occupancies under the density/area design method.

8.4.2 Sidewall Spray Sprinklers. Sidewall sprinklers shall only be installed as follows:

(1) Light hazard occupancies with smooth, horizontal or sloped, flat ceilings
(2) Ordinary hazard occupancies with smooth, flat ceilings where specifically listed for such use
(3) To protect areas below overhead doors

8.4.3 Extended Coverage Sprinklers. Extended coverage sprinklers shall only be installed as follows:

(1) Unobstructed construction consisting of flat, smooth ceilings with a slope not exceeding a pitch of 1 in 6 (a rise of 2 units in a run of 12 units, a roof slope of 16.7 percent)
(2) Unobstructed or noncombustible obstructed construction, where specifically listed for such use
(3) Within trusses or bar joists having web members not greater than 1 in. (25.4 mm) maximum dimension or where trusses are spaced greater than 7½ ft (2.3 m) on center and where the ceiling slope does not exceed a pitch of 1 in 6 (a rise of 2 units in a run of 12 units, a roof slope of 16.7 percent)
(4) Extended coverage upright and pendent sprinklers installed under smooth, flat ceilings that have slopes not exceeding a pitch of 1 in 3 (a rise of 4 units in a run of 12 units, a roof slope of 33.3 percent), where specifically listed for such use
(5) Extended coverage sidewall sprinklers installed in accordance with 8.9.4.2.2 in slopes exceeding a ceiling pitch of 2 in 12 where listed for such use
(6) In each bay of obstructed construction consisting of solid structural members that extend below the deflector of the sprinkler

8.4.4 Open Sprinklers.

8.4.4.1 Open sprinklers shall be permitted to be used in deluge systems to protect special hazards or exposures or in other special locations.

8.4.4.2 Open sprinklers shall be installed in accordance with all applicable requirements of this standard for their automatic counterpart.

8.4.5 Residential Sprinklers.

8.4.5.1* Residential sprinklers shall be permitted in dwelling units and their adjoining corridors, provided they are installed in conformance with their listing.

8.4.5.2 Residential sprinklers shall be used only in wet systems unless specifically listed for use in dry systems or preaction systems.

8.4.5.3 Where residential sprinklers are installed in a compartment as defined in 3.3.6, all sprinklers within the compartment shall be residential sprinklers.

8.4.6 Early Suppression Fast-Response (ESFR) Sprinklers.

8.4.6.1 ESFR sprinklers shall be used only in wet pipe systems unless specifically listed for use in dry systems.

8.4.6.1.1 ESFR sprinklers shall not be permitted to protect storage on solid shelf racks unless the solid shelves are protected in accordance with 16.1.6 or 17.1.5 as applicable to the type of storage.

8.4.6.1.2 ESFR sprinklers shall not be permitted to protect storage with open top containers.

8.4.6.2 ESFR sprinklers shall be installed only in buildings where roof or ceiling slope above the sprinklers does not exceed a pitch of 2 in 12 (a rise of 2 units in a run of 12 units, a roof slope of 16.7 percent).

8.4.6.3* ESFR sprinklers shall be permitted for use in buildings with unobstructed and noncombustible obstructed construction.

8.4.6.3.1 Where depths of the solid structural members (beams, stem, and so forth) exceed 12 in. (305 mm), ESFR sprinklers shall be installed in each channel formed by the solid structural members.

8.4.6.3.2 Minimum sprinkler spacing and area of coverage shall comply with the requirements of 8.12.2 and 8.12.3.

8.4.6.4 Draft Curtains.

8.4.6.4.1 Where ESFR sprinkler systems are installed adjacent to sprinkler systems with standard-response sprinklers, a draft curtain of noncombustible construction and at least 2 ft (0.6 m) in depth shall be required to separate the two areas.

8.4.6.4.2 A clear aisle of at least 4 ft (1.2 m) centered below the draft curtain shall be maintained for separation.

8.4.6.5 Temperature Ratings. Sprinkler temperature ratings for ESFR sprinklers shall be ordinary unless 8.3.2 requires intermediate- or high-temperature ratings.

8.4.6.6 Occupancy and Hazard. ESFR sprinklers designed to meet any criteria in Chapter 12 through Chapter 20 shall be permitted to protect light and ordinary hazard occupancies.

8.4.7 Control Mode Specific Application (CMSA) Sprinklers.

8.4.7.1 CMSA sprinklers shall be permitted to be used in wet, dry, or preaction systems and shall be installed in accordance with their listing.

8.4.7.2* Galvanized Pipe.

8.4.7.2.1 Where steel pipe is used in preaction and dry pipe systems, piping materials shall be limited to internally galvanized steel.

Copyright 2014 National Fire Protection Association (NFPA). Licensed, by agreement, for individual use and download on October 4, 2014 to LEADER and READER for designated user PATTARAPORN SRITRAKOOL. No other reproduction or transmission in any form permitted without written permission of NFPA. For inquires or to report unauthorized use, contact licensing@nfpa.org.

8.4.7.2.2 Black steel pipe shall be permitted when the system is installed in freezers where the air temperature is below 32°F (0°C) and the air supply is either nitrogen or a listed regenerative air dryer.

8.4.7.2.3 Nongalvanized fittings shall be permitted.

8.4.7.3 Temperature Ratings.

8.4.7.3.1 Unless the requirements of 8.4.7.3.2, 8.4.7.3.3, or 8.4.7.3.4 are met, sprinkler temperature ratings shall be the same as those indicated in Table 8.3.2.5(a) and Table 8.3.2.5(b) or those used in large-scale fire testing to determine the protection requirements for the hazard involved.

8.4.7.3.2 Sprinklers of intermediate- and high-temperature ratings shall be installed in specific locations as required by 8.3.2.

8.4.7.3.3 In storage occupancies, ordinary, intermediate, or high temperature–rated sprinklers shall be used for wet pipe systems.

8.4.7.3.4 In storage occupancies, high temperature–rated sprinklers shall be used for dry pipe systems.

8.4.7.4 Occupancy and Hazard.

8.4.7.4.1 Quick-response CMSA sprinklers designed to meet any criteria in Chapter 12 through Chapter 20 shall be permitted to protect light and ordinary hazard occupancies.

8.4.7.4.2 Standard-response CMSA sprinklers designed to meet any criteria in Chapter 12 through Chapter 20 shall be permitted to protect ordinary hazard occupancies.

8.4.8 Special Sprinklers.

8.4.8.1* Special sprinklers that are intended for the protection of specific hazards or construction features shall be permitted where such devices have been evaluated and listed for performance under the following conditions:

(1) Fire tests related to the intended hazard
(2) Distribution of the spray pattern with respect to wetting of floors and walls
(3) Distribution of the spray pattern with respect to obstructions
(4) Evaluation of the thermal sensitivity of the sprinkler
(5) Performance under horizontal or sloped ceilings
(6) Area of design
(7) Allowable clearance to ceilings

8.4.8.2 Special sprinklers shall maintain the following characteristics:

(1) K-factor size shall be in accordance with 6.2.3.
(2) Temperature ratings shall be in accordance with Table 6.2.5.1.
(3) The protection area of coverage shall not exceed 400 ft^2 (36 m^2) for light hazard and ordinary hazard occupancies.
(4) The protection area of coverage shall not exceed 196 ft^2 (17 m^2) for extra hazard and high-piled storage occupancies.

8.4.9 Dry Sprinklers.

8.4.9.1* Where dry sprinklers are connected to wet pipe sprinkler systems protecting areas subject to freezing temperatures, the minimum exposed length of the barrel of the dry sprinkler shall be in accordance with Table 8.4.9.1(a) or Table 8.4.9.1(b).

8.4.9.2 The minimum barrel length shall be measured from the face of the fitting to which the dry sprinkler is installed to the inside surface of the insulation, wall, or ceiling leading to the cold space, whichever is closest to the fitting.

8.4.9.3* Where dry sprinklers are connected to wet pipe sprinkler systems protecting insulated freezer structures, the clearance space around the sprinkler barrel shall be sealed.

8.5 Position, Location, Spacing, and Use of Sprinklers.

8.5.1 General.

8.5.1.1 Sprinklers shall be located, spaced, and positioned in accordance with the requirements of Section 8.5.

8.5.1.2 Sprinklers shall be positioned to provide protection of the area consistent with the overall objectives of this standard by controlling the positioning and allowable area of coverage for each sprinkler.

8.5.1.3 The requirements of 8.5.2 through 8.5.7 shall apply to all sprinkler types unless modified by more restrictive rules in Section 8.6 through Section 8.12.

8.5.2 Protection Areas per Sprinkler.

8.5.2.1 Determination of Protection Area of Coverage.

8.5.2.1.1 The protection area of coverage per sprinkler (A_s) shall be determined as follows:

(1) Along branch lines as follows:
   (a) Determine distance between sprinklers (or to wall or obstruction in the case of the end sprinkler on the branch line) upstream and downstream
   (b) Choose the larger of either twice the distance to the wall or the distance to the next sprinkler
   (c) Define dimension as S
(2) Between branch lines as follows:
   (a) Determine perpendicular distance to the sprinkler on the adjacent branch line (or to a wall or obstruction in the case of the last branch line) on each side of the branch line on which the subject sprinkler is positioned
   (b) Choose the larger of either twice the distance to the wall or obstruction or the distance to the next sprinkler
   (c) Define dimension as L

8.5.2.1.2 The protection area of coverage of the sprinkler shall be established by multiplying the S dimension by the L dimension, as follows:

$$A_s = S \times L$$

8.5.2.2 Maximum Protection Area of Coverage.

8.5.2.2.1 The maximum allowable protection area of coverage for a sprinkler (A_s) shall be in accordance with the value indicated in the section for each type or style of sprinkler.

8.5.2.2.2 The maximum area of coverage of any sprinkler shall not exceed 400 ft^2 (36 m^2).

8.5.3 Sprinkler Spacing.

8.5.3.1 Maximum Distance Between Sprinklers.

8.5.3.1.1 The maximum distance permitted between sprinklers shall be based on the centerline distance between adjacent sprinklers.

8.5.3.1.2 The maximum distance shall be measured along the slope of the ceiling.

Copyright 2014 National Fire Protection Association (NFPA). Licensed, by agreement, for individual use and download on October 4, 2014 to LEADER and READER for designated user PATTARAPORN SRITRAKOOL. No other reproduction or transmission in any form permitted without written permission of NFPA. For inquires or to report unauthorized use, contact licensing@nfpa.org.

Table 8.4.9.1(a) Exposed Barrel Lengths for Dry Sprinklers (U.S. Customary Units)

Ambient Temperature Exposed to Discharge End of Sprinkler (°F)	Minimum Exposed Barrel Length when Exposed to 40°F (in.)	Minimum Exposed Barrel Length when Exposed to 50°F (in.)	Minimum Exposed Barrel Length when Exposed to 60°F (in.)
40	0	0	0
30	0	0	0
20	4	0	0
10	8	1	0
0	12	3	0
–10	14	4	1
–20	14	6	3
–30	16	8	4
–40	18	8	4
–50	20	10	6
–60	20	10	6

Table 8.4.9.1(b) Exposed Barrel Lengths for Dry Sprinklers (Metric Units)

Ambient Temperature Exposed to Discharge End of Sprinkler (°C)	Minimum Exposed Barrel Length when Exposed to 4°C (mm)	Minimum Exposed Barrel Length when Exposed to 10°C (mm)	Minimum Exposed Barrel Length when Exposed to 16°C (mm)
4	0	0	0
–1	0	0	0
–7	100	0	0
–12	200	25	0
–18	300	80	0
–23	360	100	25
–29	360	150	80
–34	400	200	100
–40	460	200	100
–46	510	250	150
–51	510	250	150

8.5.3.1.3 The maximum distance permitted between sprinklers shall comply with the value indicated in the applicable section for each type or style of sprinkler.

8.5.3.2 Maximum Distance from Walls.

8.5.3.2.1 The distance from sprinklers to walls shall not exceed one-half of the allowable maximum distance between sprinklers.

8.5.3.2.2 The distance from the wall to the sprinkler shall be measured perpendicular to the wall.

8.5.3.2.3 The distance from the wall to the sprinkler shall be measured to the wall behind furniture, such as wardrobes, cabinets, and trophy cases.

8.5.3.2.4 The distance from the wall to the sprinkler shall be measured to the wall when sprinklers are spaced near windows and no additional floor space is created.

8.5.3.3 Minimum Distance from Walls.

8.5.3.3.1 The minimum distance permitted between a sprinkler and the wall shall comply with the value indicated in the applicable section for each type or style of sprinkler.

8.5.3.3.2 The distance from the wall to the sprinkler shall be measured perpendicular to the wall.

8.5.3.4 Minimum Distance Between Sprinklers.

8.5.3.4.1 A minimum distance shall be maintained between sprinklers to prevent operating sprinklers from wetting adjacent sprinklers and to prevent skipping of sprinklers.

8.5.3.4.2 The minimum distance permitted between sprinklers shall comply with the value indicated in the applicable section for each type or style of sprinkler.

8.5.4 Deflector Position.

8.5.4.1* Distance Below Ceilings.

8.5.4.1.1 The distances between the sprinkler deflector and the ceiling above shall be selected based on the type of sprinkler and the type of construction.

8.5.4.1.2 Corrugated Metal Deck Roofs.

8.5.4.1.2.1 For corrugated metal deck roofs up to 3 in. (76 mm) in depth, the distance shall be measured to the sprinkler from the bottom of the deck.

8.5.4.1.2.2 For decks deeper than 3 in. (76 mm), the distance shall be measured to the highest point on the deck.

8.5.4.1.3 For ceilings that have insulation installed directly against underside of the ceiling or roof structure, the deflec-

Copyright 2014 National Fire Protection Association (NFPA). Licensed, by agreement, for individual use and download on October 4, 2014 to LEADER and READER for designated user PATTARAPORN SRITRAKOOL. No other reproduction or transmission in any form permitted without written permission of NFPA. For inquires or to report unauthorized use, contact licensing@nfpa.org.

tor distance shall be measured from the bottom of the insulation and shall be in accordance with 8.5.4.1.3.1 or 8.5.4.1.3.2.

8.5.4.1.3.1 For insulation that is installed directly against the ceiling or roof structure and is installed flat and parallel to the ceiling or roof structure, the deflector distance shall be measured to the underside of the insulation.

8.5.4.1.3.2 For insulation that is installed in a manner that causes it to deflect or sag down from the ceiling or roof structure, the deflector distance shall be measured as half of the distance of the deflection from the insulation high point to the insulation low point.

(A) If the deflection or sag in the insulation exceeds 6 in. (152 mm), the deflector distance shall be measured to the high point of the insulation.

(B) The deflector shall not be positioned above the low point of the insulation.

8.5.4.1.4* Heat collectors shall not be used as a means to assist the activation of a sprinkler.

8.5.4.2 Deflector Orientation. Deflectors of sprinklers shall be aligned parallel to ceilings, roofs, or the incline of stairs.

8.5.5 Obstructions to Sprinkler Discharge.

8.5.5.1* Performance Objective. Sprinklers shall be located so as to minimize obstructions to discharge as defined in 8.5.5.2 and 8.5.5.3, or additional sprinklers shall be provided to ensure adequate coverage of the hazard. *(See Figure A.8.5.5.1.)*

8.5.5.2* Obstructions to Sprinkler Discharge Pattern Development.

8.5.5.2.1 Continuous or noncontinuous obstructions less than or equal to 18 in. (457 mm) below the sprinkler deflector that prevent the pattern from fully developing shall comply with 8.5.5.2.

8.5.5.2.2 Sprinklers shall be positioned in accordance with the minimum distances and special requirements of Section 8.6 through Section 8.12 so that they are located sufficiently away from obstructions such as truss webs and chords, pipes, columns, and fixtures.

8.5.5.3* Obstructions that Prevent Sprinkler Discharge from Reaching Hazard. Continuous or noncontinuous obstructions that interrupt the water discharge in a horizontal plane more than 18 in. (457 mm) below the sprinkler deflector in a manner to limit the distribution from reaching the protected hazard shall comply with 8.5.5.3.

8.5.5.3.1* Sprinklers shall be installed under fixed obstructions over 4 ft (1.2 m) wide.

8.5.5.3.1.1 Open grate flooring over 4 ft (1.2 m) in width shall require sprinkler protection below the grating.

8.5.5.3.2 Sprinklers shall not be required under obstructions that are not fixed in place, such as conference tables.

8.5.5.3.3* Sprinklers installed under open gratings shall be of the intermediate level/rack storage type or otherwise shielded from the discharge of overhead sprinklers.

8.5.5.4 Closets. In all closets and compartments, including those closets housing mechanical equipment, that are not larger than 400 ft^3 (11.33 m^3) in size, a single sprinkler at the highest ceiling space shall be sufficient without regard to obstructions or minimum distance to the wall.

8.5.6 Clearance from Deflector to Storage.

8.5.6.1* Unless the requirements of 8.5.6.2, 8.5.6.3, 8.5.6.4, or 8.5.6.5 are met, the clearance between the deflector and the top of storage or contents of the room shall be 18 in. (457 mm) or greater.

8.5.6.2 Where other standards specify greater clearance to storage minimums, they shall be followed.

8.5.6.3 A minimum clearance to storage of 36 in. (914 mm) shall be permitted for special sprinklers.

8.5.6.4 A minimum clearance to storage of less than 18 in. (457 mm) between the top of storage and ceiling sprinkler deflectors shall be permitted where proven by successful large-scale fire tests for the particular hazard.

8.5.6.5 The clearance from the top of storage to sprinkler deflectors shall be not less than 36 in. (914 mm) where rubber tires are stored.

8.5.7 Skylights.

8.5.7.1 Sprinklers shall be permitted to be omitted from skylights not exceeding 32 ft^2 (3 m^2) in area, regardless of hazard classification, that are separated by at least 10 ft (3 m) horizontally from any other unprotected skylight or unprotected ceiling pocket.

8.5.7.2 Skylights not exceeding 32 ft^2 (3 m^2) shall be permitted to have a plastic cover.

8.6 Standard Pendent and Upright Spray Sprinklers.

8.6.1 General. All requirements of Section 8.5 shall apply to standard pendent and upright spray sprinklers except as modified in Section 8.6.

8.6.2 Protection Areas per Sprinkler (Standard Pendent and Upright Spray Sprinklers).

8.6.2.1 Determination of Protection Area of Coverage.

8.6.2.1.1 Except as permitted by 8.6.2.1.2, the protection area of coverage per sprinkler (A_s) shall be determined in accordance with 8.5.2.1.

8.6.2.1.2 The requirements of 8.6.2.1.1 shall not apply in a small room as defined in 3.3.21.

8.6.2.1.2.1 The protection area of coverage for each sprinkler in the small room shall be the area of the room divided by the number of sprinklers in the room.

8.6.2.2 Maximum Protection Area of Coverage.

8.6.2.2.1* The maximum allowable protection area of coverage for a sprinkler (A_s) shall be in accordance with the value indicated in Table 8.6.2.2.1(a) through Table 8.6.2.2.1(d).

8.6.2.2.2 In any case, the maximum area of coverage of a sprinkler shall not exceed 225 ft^2 (21 m^2).

8.6.3 Sprinkler Spacing (Standard Pendent and Upright Spray Sprinklers).

8.6.3.1 Maximum Distance Between Sprinklers. The maximum distance permitted between sprinklers shall comply with Table 8.6.2.2.1(a) through Table 8.6.2.2.1(d).

8.6.3.2 Maximum Distance from Walls.

8.6.3.2.1 The distance from sprinklers to walls shall not exceed one-half of the allowable distance between sprinklers as indicated in Table 8.6.2.2.1(a) through Table 8.6.2.2.1(d).

Copyright 2014 National Fire Protection Association (NFPA). Licensed, by agreement, for individual use and download on October 4, 2014 to LEADER and READER for designated user PATTARAPORN SRITRAKOOL. No other reproduction or transmission in any form permitted without written permission of NFPA. For inquires or to report unauthorized use, contact licensing@nfpa.org.

Table 8.6.2.2.1(a) Protection Areas and Maximum Spacing of Standard Pendent and Upright Spray Sprinklers for Light Hazard

Construction Type	System Type	Maximum Protection Area		Maximum Spacing	
		ft^2	m^2	ft	m
Noncombustible unobstructed	Hydraulically calculated	225	20.9	15	4.6
Noncombustible unobstructed	Pipe schedule	200	18.6	15	4.6
Noncombustible obstructed	Hydraulically calculated	225	20.9	15	4.6
Noncombustible obstructed	Pipe schedule	200	18.6	15	4.6
Combustible unobstructed with no exposed members	Hydraulically calculated	225	20.9	15	4.6
Combustible unobstructed with no exposed members	Pipe schedule	200	18.6	15	4.6
Combustible unobstructed with exposed members 3 ft (0.91 m) or more on center	Hydraulically calculated	225	20.9	15	4.6
Combustible unobstructed with exposed members 3 ft (0.91 m) or more on center	Pipe schedule	200	18.6	15	4.6
Combustible unobstructed with members less than 3 ft (0.91 m) on center	All	130	12.1	15	4.6
Combustible obstructed with exposed members 3 ft (0.91 m) or more on center	All	168	15.6	15	4.6
Combustible obstructed with members less than 3 ft (0.91 m) on center	All	130	12.1	15	4.6
Combustible concealed spaces in accordance with 8.6.4.1.4	All	120	11.1	15 parallel to the slope 10 perpendicular to the slope*	4.6 parallel to the slope 3.05 perpendicular to the slope*

*See 8.6.4.1.4.4.

Table 8.6.2.2.1(b) Protection Areas and Maximum Spacing of Standard Pendent and Upright Spray Sprinklers for Ordinary Hazard

Construction Type	System Type	Protection Area		Maximum Spacing	
		ft^2	m^2	ft	m
All	All	130	12.1	15	4.6

Table 8.6.2.2.1(c) Protection Areas and Maximum Spacing of Standard Pendent and Upright Spray Sprinklers for Extra Hazard

Construction Type	System Type	Protection Area		Maximum Spacing	
		ft^2	m^2	ft	m
All	Pipe schedule	90	8.4	12*	3.7*
All	Hydraulically calculated with density ≥0.25	100	9.3	12*	3.7*
All	Hydraulically calculated with density <0.25	130	12.1	15	4.6

*In buildings where solid structural members create bays up to 25 ft (7.6 m) wide, maximum spacing between sprinklers is permitted up to 12 ft 6 in. (3.8 m).

8.6.3.2.2 The distance from the wall to the sprinkler shall be measured perpendicular to the wall.

8.6.3.2.3* The requirements of 8.6.3.2.1 shall not apply where walls are angled or irregular, and the maximum horizontal distance between a sprinkler and any point of floor area protected by that sprinkler shall not exceed 0.75 times the allowable distance permitted between sprinklers, provided the maximum perpendicular distance is not exceeded.

8.6.3.2.4* The requirements of 8.6.3.2.1 shall not apply within small rooms as defined in 3.3.21.

Copyright 2014 National Fire Protection Association (NFPA). Licensed, by agreement, for individual use and download on October 4, 2014 to LEADER and READER for designated user PATTARAPORN SRITRAKOOL. No other reproduction or transmission in any form permitted without written permission of NFPA. For inquires or to report unauthorized use, contact licensing@nfpa.org.

Table 8.6.2.2.1(d) Protection Areas and Maximum Spacing of Standard Pendent and Upright Spray Sprinklers for High-Piled Storage

Construction Type	System Type	Protection Area		Maximum Spacing	
		ft^2	m^2	ft	m
All	Hydraulically calculated with density ≥0.25	100	9.3	12*	3.7*
All	Hydraulically calculated with density <0.25	130	12.1	15	4.6

*In buildings where solid structural members create bays up to 25 ft (7.6 m) wide, maximum spacing between sprinklers is permitted up to 12 ft 6 in. (3.8 m).

8.6.3.2.4.1 Sprinklers shall be permitted to be located not more than 9 ft (2.7 m) from any single wall.

8.6.3.2.4.2 Sprinkler spacing limitations of 8.6.3 and area limitations of Table 8.6.2.2.1(a) shall not be exceeded.

8.6.3.2.5 Under curved surfaces, the horizontal distance shall be measured at the floor level from the wall, or the intersection of the curved surface and the floor to the nearest sprinkler shall not be greater than one-half the allowable distance between sprinklers.

8.6.3.3 Minimum Distances from Walls. Sprinklers shall be located a minimum of 4 in. (102 mm) from a wall.

8.6.3.4 Minimum Distances Between Sprinklers.

8.6.3.4.1 Unless the requirements of 8.6.3.4.2, 8.6.3.4.3, or 8.6.3.4.4 are met, sprinklers shall be spaced not less than 6 ft (1.8 m) on center.

8.6.3.4.2 Sprinklers shall be permitted to be placed less than 6 ft (1.8 m) on center where the following conditions are satisfied:

(1) Baffles shall be arranged to protect the actuating elements.
(2) Baffles shall be of solid and rigid material that will stay in place before and during sprinkler operation.
(3) Baffles shall be not less than 8 in. (203 mm) long and 6 in. (152 mm) high.
(4) The tops of baffles shall extend between 2 in. and 3 in. (51 mm and 76 mm) above the deflectors of upright sprinklers.
(5) The bottoms of baffles shall extend downward to a level at least even with the deflectors of pendent sprinklers.

8.6.3.4.3 In-rack sprinklers shall be permitted to be placed less than 6 ft (1.8 m) on center.

8.6.3.4.4 Old-style sprinklers protecting fur storage vaults shall be permitted to be placed less than 6 ft (1.8 m) on center.

8.6.4 Deflector Position (Standard Pendent and Upright Spray Sprinklers).

8.6.4.1 Distance Below Ceilings.

8.6.4.1.1 Unobstructed Construction.

8.6.4.1.1.1 Under unobstructed construction, the distance between the sprinkler deflector and the ceiling shall be a minimum of 1 in. (25.4 mm) and a maximum of 12 in. (305 mm) throughout the area of coverage of the sprinkler.

8.6.4.1.1.2 The requirements of 8.6.4.1.1.1 shall not apply where ceiling-type sprinklers (concealed, recessed, and flush types) have the operating element above the ceiling and the deflector located nearer to the ceiling where installed in accordance with their listing.

8.6.4.1.1.3 The requirements of 8.6.4.1.1.1 shall not apply for light and ordinary hazard occupancies with ceilings of noncombustible or limited-combustible construction.

(A) Where a vertical change in ceiling elevation within the area of coverage of the sprinkler creates a distance of more than 36 in. (914 mm) between the upper ceiling and the sprinkler deflector, a vertical plane extending down from the ceiling at the change in elevation shall be considered a wall for the purpose of sprinkler spacing as shown in Figure 8.6.4.1.1.3(A).

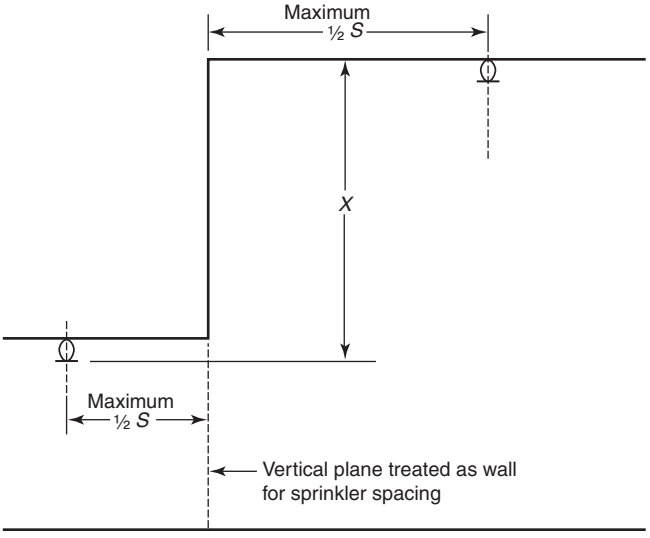

FIGURE 8.6.4.1.1.3(A) Vertical Change in Ceiling Elevation Greater Than 36 in. (914 mm).

(B) Where the distance between the upper ceiling and the sprinkler deflector is less than or equal to 36 in. (914 mm), the sprinklers shall be permitted to be spaced as though the ceiling was flat, provided the obstruction rules are observed as shown in Figure 8.6.4.1.1.3(B).

8.6.4.1.2 Obstructed Construction. Under obstructed construction, the sprinkler deflector shall be located in accordance with one of the following arrangements:

(1) Installed with the deflectors within the horizontal planes of 1 in. to 6 in. (25.4 mm to 152 mm) below the structural members and a maximum distance of 22 in. (559 mm) below the ceiling/roof deck
(2) Installed with the deflectors at or above the bottom of the structural member to a maximum of 22 in. (559 mm) below the ceiling/roof deck where the sprinkler is installed in conformance with 8.6.5.1.2

Copyright 2014 National Fire Protection Association (NFPA). Licensed, by agreement, for individual use and download on October 4, 2014 to LEADER and READER for designated user PATTARAPORN SRITRAKOOL. No other reproduction or transmission in any form permitted without written permission of NFPA. For inquires or to report unauthorized use, contact licensing@nfpa.org.

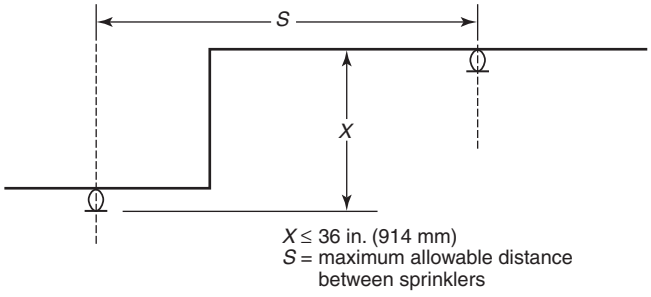

FIGURE 8.6.4.1.1.3(B) Vertical Change in Ceiling Elevation Less Than or Equal to 36 in. (914 mm).

(3) Installed in each bay of obstructed construction, with the deflectors located a minimum of 1 in. (25.4 mm) and a maximum of 12 in. (305 mm) below the ceiling

(4) Installed with the deflectors within the horizontal planes 1 in. to 6 in. (25.4 mm to 152 mm) below composite wood joists to a maximum distance of 22 in. (559 mm) below the ceiling/roof deck only where joist channels are fire-stopped to the full depth of the joists with material equivalent to the web construction so that individual channel areas do not exceed 300 ft^2 (27.9 m^2)

(5)*Installed with deflectors of sprinklers under concrete tee construction with stems spaced less than 7½ ft (2.3 m) but more than 3 ft (0.91 m) on centers, regardless of the depth of the tee, located at or above a horizontal plane 1 in. (25.4 mm) below the bottom of the stems of the tees and complying with Table 8.6.5.1.2

8.6.4.1.3 Peaked Roofs and Ceilings.

8.6.4.1.3.1 Unless the requirements of 8.6.4.1.3.2 or 8.6.4.1.3.3 are met, sprinklers under or near the peak of a roof or ceiling shall have deflectors located not more than 36 in. (914 mm) vertically down from the peak as indicated in Figure 8.6.4.1.3.1(a) and Figure 8.6.4.1.3.1(b).

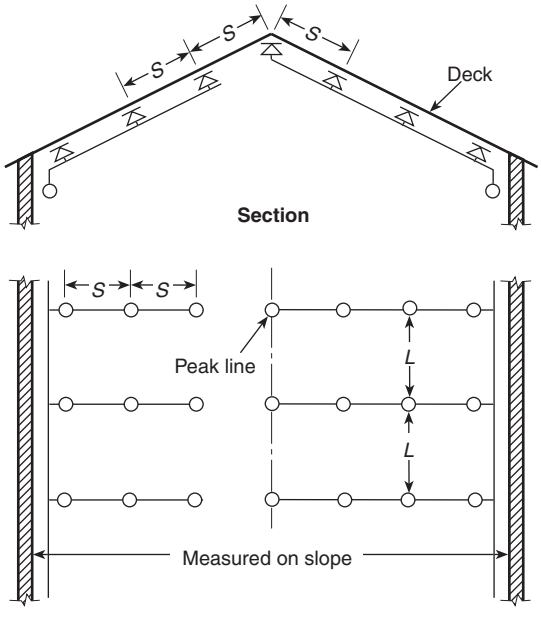

FIGURE 8.6.4.1.3.1(a) Sprinklers Under Pitched Roof with Sprinkler Directly Under Peak; Branch Lines Run Up Slopes.

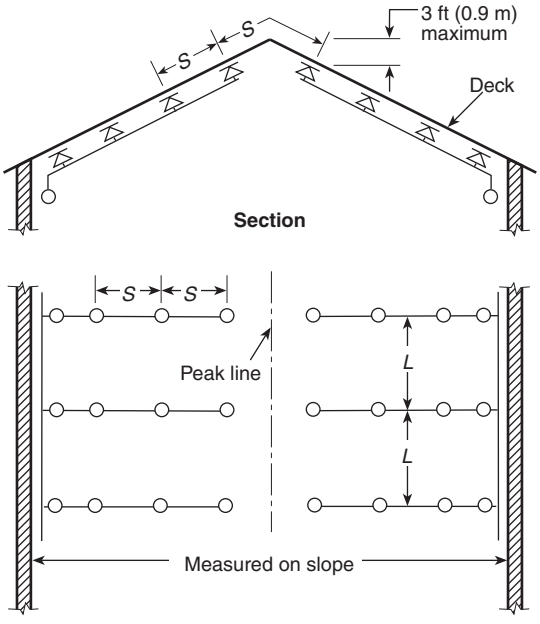

FIGURE 8.6.4.1.3.1(b) Sprinklers at Pitched Roof; Branch Lines Run Up Slopes.

8.6.4.1.3.2* Under saw-toothed roofs, sprinklers at the highest elevation shall not exceed a distance of 36 in. (914 mm) measured down the slope from the peak.

8.6.4.1.3.3* Under a steeply pitched surface, the distance from the peak to the deflectors shall be permitted to be increased to maintain a horizontal clearance of not less than 24 in. (610 mm) from other structural members as indicated in Figure 8.6.4.1.3.3.

8.6.4.1.4 Sprinklers Under Roof or Ceiling in Combustible Concealed Spaces of Wood Joist or Wood Truss Construction with Members Less Than 3 ft (0.91 m) on Center and Slope Having Pitch of 4 in 12 or Greater. Sprinklers shall be positioned in accordance with Figure 8.6.4.1.4 and the requirements of 8.6.4.1.4.1 through 8.6.4.1.4.5.

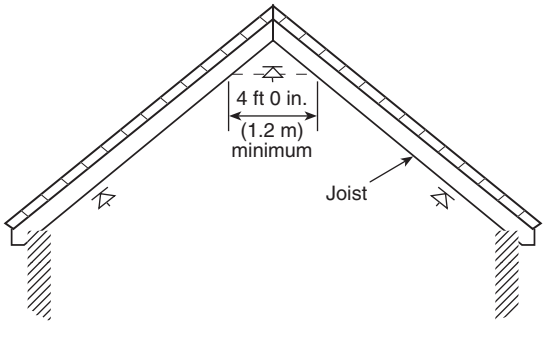

FIGURE 8.6.4.1.3.3 Horizontal Clearance for Sprinkler at Peak of Pitched Roof.

Copyright 2014 National Fire Protection Association (NFPA). Licensed, by agreement, for individual use and download on October 4, 2014 to LEADER and READER for designated user PATTARAPORN SRITRAKOOL. No other reproduction or transmission in any form permitted without written permission of NFPA. For inquires or to report unauthorized use, contact licensing@nfpa.org.

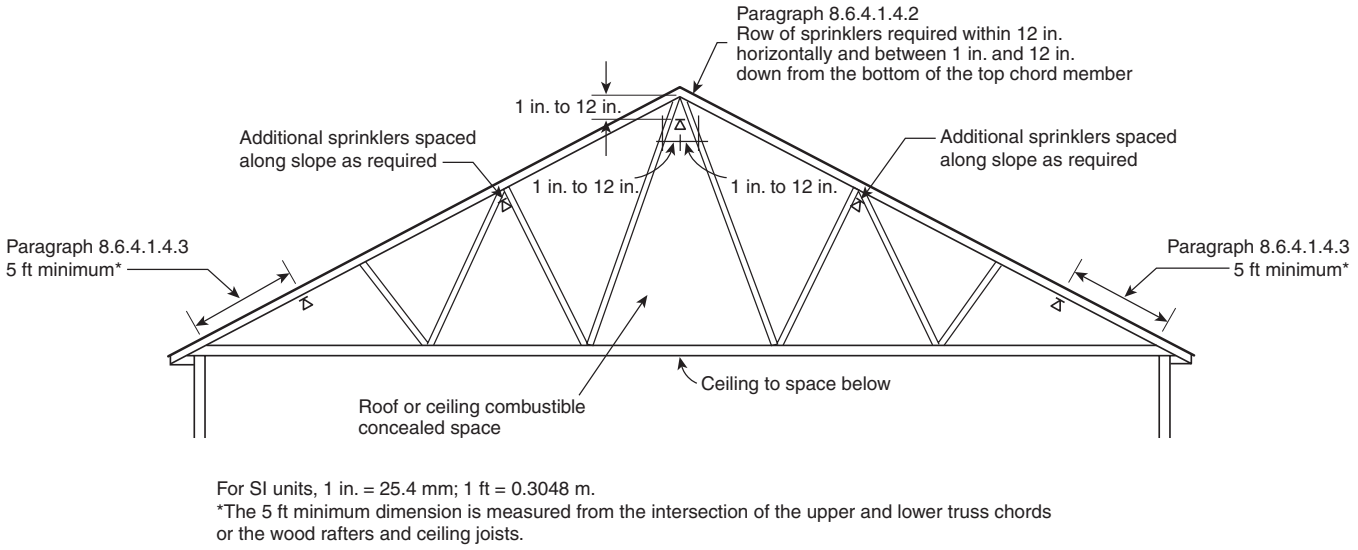

For SI units, 1 in. = 25.4 mm; 1 ft = 0.3048 m.
*The 5 ft minimum dimension is measured from the intersection of the upper and lower truss chords or the wood rafters and ceiling joists.

FIGURE 8.6.4.1.4 Sprinklers Under Roof or Ceiling in Combustible Concealed Spaces of Wood Joist or Wood Truss Construction with Members Less Than 3 ft (0.91 m) on Center and Slope Having Pitch of 4 in 12 or Greater.

8.6.4.1.4.1 Sprinklers under a roof or ceiling in combustible concealed spaces of wood joist or wood truss construction with members less than 3 ft (0.91 m) on center and a slope having a pitch of 4 in 12 or greater shall be quick-response.

8.6.4.1.4.2 Sprinklers under a roof or ceiling in combustible concealed spaces of wood joist or wood truss construction with members less than 3 ft (0.91 m) on center and a slope having a pitch of 4 in 12 or greater shall be installed so that a row of sprinklers is installed within 12 in. (305 mm) horizontally of the peak and between 1 in. and 12 in. (25.4 mm and 305 mm) down from the bottom of the top chord member.

8.6.4.1.4.3 Sprinklers under a roof or ceiling in combustible concealed spaces of wood joist or wood truss construction with members less than 3 ft (0.91 m) on center and a slope having a pitch of 4 in 12 or greater shall be installed so that the sprinklers installed along the eave are located not less than 5 ft (1.52 m) from the intersection of the upper and lower truss chords or the wood rafters and ceiling joists.

8.6.4.1.4.4 Sprinklers under a roof or ceiling in combustible concealed spaces of combustible wood joist or wood truss construction with members less than 3 ft (0.91 m) on center and a slope having a pitch of 4 in 12 or greater, and using standard spray sprinklers, where the dimension perpendicular to the slope exceeds 8 ft (2.4 m), shall have a minimum pressure of 20 psi (1.4 bar).

8.6.4.1.4.5 The special requirements of 8.6.2.2.1 and 8.6.4.1.4 for sprinklers under a roof or ceiling in combustible concealed spaces of wood joist or wood truss construction with members less than 3 ft (0.91 m) on center and a slope having a pitch of 4 in 12 or greater shall not apply when the exposed combustible sheathing in the roof or ceiling space are constructed of pressure impregnated fire-retardant treated wood as defined by NFPA 703.

8.6.4.1.5 Double Joist Obstructions.

8.6.4.1.5.1 Unless the requirements of 8.6.4.1.5.2 are met, where two sets of joists are under a roof or ceiling, and no flooring is over the lower set, sprinklers shall be installed above and below the lower set of joists where a clearance of 6 in. (152 mm) or more is between the top of the lower joist and the bottom of the upper joist as indicated in Figure 8.6.4.1.5.1.

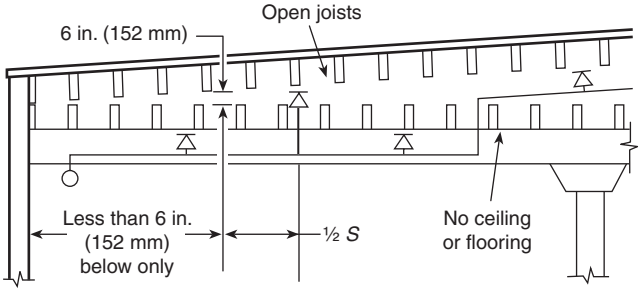

FIGURE 8.6.4.1.5.1 Arrangement of Sprinklers Under Two Sets of Open Joists — No Sheathing on Lower Joists.

8.6.4.1.5.2 Sprinklers shall be permitted to be omitted from below the lower set of joists where at least 18 in. (457 mm) is maintained between the sprinkler deflector and the top of the lower joist.

Copyright 2014 National Fire Protection Association (NFPA). Licensed, by agreement, for individual use and download on October 4, 2014 to LEADER and READER for designated user PATTARAPORN SRITRAKOOL. No other reproduction or transmission in any form permitted without written permission of NFPA. For inquires or to report unauthorized use, contact licensing@nfpa.org.

8.6.4.2 Deflector Orientation.

8.6.4.2.1 Unless the requirements of 8.6.4.2.2 or 8.6.4.2.3 are met, deflectors of sprinklers shall be aligned parallel to ceilings, roofs, or the incline of stairs.

8.6.4.2.2 Where sprinklers are installed in the peak below a sloped ceiling or roof surface, the sprinkler shall be installed with the deflector horizontal.

8.6.4.2.3 Roofs having a pitch not exceeding 2 in 12 (16.7 percent) are considered horizontal in the application of 8.6.4.2, and sprinklers shall be permitted to be installed with deflectors horizontal.

8.6.5 Obstructions to Sprinkler Discharge (Standard Pendent and Upright Spray Sprinklers).

8.6.5.1 Performance Objective.

8.6.5.1.1 Sprinklers shall be located so as to minimize obstructions to discharge as defined in 8.6.5.2 and 8.6.5.3, or additional sprinklers shall be provided to ensure adequate coverage of the hazard.

8.6.5.1.2* Sprinklers shall be arranged to comply with one of the following arrangements:

(1) Subsection 8.5.5.2, Table 8.6.5.1.2, and Figure 8.6.5.1.2(a) shall be followed.
(2) Sprinklers shall be permitted to be spaced on opposite sides of obstructions not exceeding 4 ft (1.2 m) in width, provided the distance from the centerline of the obstruction to the sprinklers does not exceed one-half the allowable distance permitted between sprinklers.
(3) Obstructions located against the wall and that are not over 30 in. (762 mm) in width shall be permitted to be protected in accordance with Figure 8.6.5.1.2(b).
(4) Obstructions located against the wall and that are not over 24 in. (610 mm) in width shall be permitted to be protected in accordance with Figure 8.6.5.1.2(c). The maximum distance between the sprinkler and the wall shall be measured from the sprinkler to the wall behind the obstruction and not to the face of the obstruction.

8.6.5.2 Obstructions to Sprinkler Discharge Pattern Development.

8.6.5.2.1 General.

8.6.5.2.1.1 Continuous or noncontinuous obstructions less than or equal to 18 in. (457 mm) below the sprinkler deflector that prevent the pattern from fully developing shall comply with 8.6.5.2.

8.6.5.2.1.2 Regardless of the rules of 8.6.5.2, solid continuous obstructions, where the top of the obstruction is level with or above the plane of the deflector, shall meet the applicable requirements of 8.6.5.1.2.

8.6.5.2.1.3* Minimum Distance from Obstructions.

(A) Unless the requirements of 8.6.5.2.1.4 through 8.6.5.2.1.9 are met, sprinklers shall be positioned away from obstructions a minimum distance of three times the maximum dimension of the obstruction (e.g., structural members, pipe, columns, and fixtures).

(B) The maximum clear distance required shall be 24 in. (609 mm) in accordance with Figure 8.6.5.2.1.3(B).

Table 8.6.5.1.2 Positioning of Sprinklers to Avoid Obstructions to Discharge [Standard Spray Upright/Standard Spray Pendent (SSU/SSP)]

Distance from Sprinklers to Side of Obstruction *(A)*	Maximum Allowable Distance of Deflector Above Bottom of Obstruction *(B)* (in.)
Less than 1 ft	0
1 ft to less than 1 ft 6 in.	2½
1 ft 6 in. to less than 2 ft	3½
2 ft to less than 2 ft 6 in.	5½
2 ft 6 in. to less than 3 ft	7½
3 ft to less than 3 ft 6 in.	9½
3 ft 6 in. to less than 4 ft	12
4 ft to less than 4 ft 6 in.	14
4 ft 6 in. to less than 5 ft	16½
5 ft to less than 5 ft 6 in.	18
5 ft 6 in. to less than 6 ft	20
6 ft to less than 6 ft 6 in.	24
6 ft 6 in. to less than 7 ft	30
7 ft to less than 7 ft 6 in.	35

For SI units, 1 in. = 25.4 mm; 1 ft = 0.3048 m.
Note: For *A* and *B*, refer to Figure 8.6.5.1.2(a).

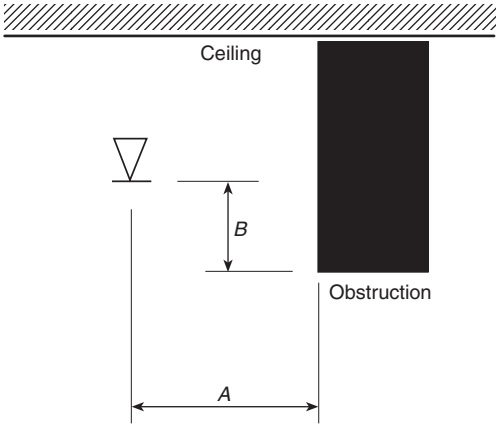

FIGURE 8.6.5.1.2(a) Positioning of Sprinkler to Avoid Obstruction to Discharge (SSU/SSP).

8.6.5.2.1.4* For light and ordinary hazard occupancies, structural members only shall be considered when applying the requirements of 8.6.5.2.1.3.

8.6.5.2.1.5 Sprinklers shall be permitted to be spaced on opposite sides of the obstruction where the distance from the centerline of the obstruction to the sprinklers does not exceed one-half the allowable distance between sprinklers.

8.6.5.2.1.6 Sprinklers shall be permitted to be located one-half the distance between the obstructions where the obstruction consists of open trusses 20 in. (0.51 m) or greater apart [24 in. (0.61 m) on center], provided that all truss members are not greater than 4 in. (102 mm) (nominal) in width.

Copyright 2014 National Fire Protection Association (NFPA). Licensed, by agreement, for individual use and download on October 4, 2014 to LEADER and READER for designated user PATTARAPORN SRITRAKOOL. No other reproduction or transmission in any form permitted without written permission of NFPA. For inquires or to report unauthorized use, contact licensing@nfpa.org.

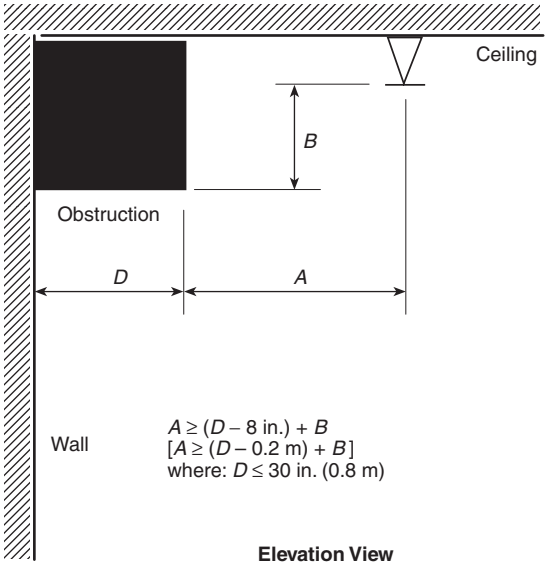

FIGURE 8.6.5.1.2(b) Obstruction Against Wall (SSU/SSP).

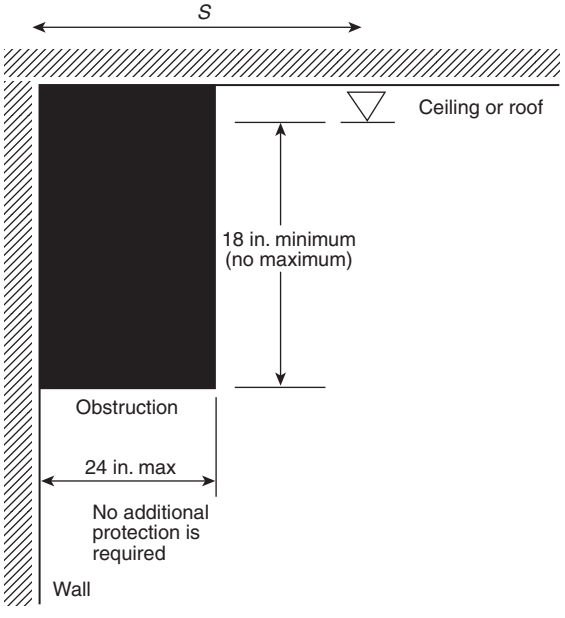

FIGURE 8.6.5.1.2(c) Obstructions Against Walls (SSU/SSP).

8.6.5.2.1.7 Sprinklers shall be permitted to be installed on the centerline of a truss or bar joist or directly above a beam, provided that the truss chord or beam dimension is not more than 8 in. (203 mm) and the sprinkler deflector is located at least 6 in. (152 mm) above the structural member and where the sprinkler is positioned at a distance three times greater than the maximum dimension of the web members away from the web members.

8.6.5.2.1.8 The requirements of 8.6.5.2.1.3 shall not apply to sprinkler system piping less than 3 in. (80 mm) in diameter.

8.6.5.2.1.9 The requirements of 8.6.5.2.1.3 shall not apply to sprinklers positioned with respect to obstructions in accordance with 8.6.5.1.2.

8.6.5.2.1.10* Sprinklers shall be permitted to be placed without regard to the blades of ceiling fans less than 60 in. (1.5 m) in diameter, provided the plan view of the fan is at least 50 percent open.

8.6.5.2.2 Suspended or Floor-Mounted Vertical Obstructions. The distance from sprinklers to privacy curtains, freestanding partitions, room dividers, and similar obstructions in light hazard occupancies shall be in accordance with Table 8.6.5.2.2 and Figure 8.6.5.2.2.

8.6.5.2.2.1* In light hazard occupancies, privacy curtains, as shown in Figure 8.6.5.2.2, shall not be considered obstructions where all of the following are met:

(1) The curtains are supported by fabric mesh on ceiling track.
(2) Openings in the mesh are equal to 70 percent or greater.
(3) The mesh extends a minimum of 22 in. (559 mm) down from ceiling.

8.6.5.3* Obstructions that Prevent Sprinkler Discharge from Reaching Hazard.

8.6.5.3.1 Continuous or noncontinuous obstructions that interrupt the water discharge in a horizontal plane more than 18 in. (457 mm) below the sprinkler deflector in a manner to limit the distribution from reaching the protected hazard shall comply with 8.6.5.3.

8.6.5.3.2 The requirements of 8.6.5.3 shall also apply to obstructions 18 in. (457 mm) or less below the sprinkler for light and ordinary hazard occupancies.

8.6.5.3.3* Sprinklers shall be installed under fixed obstructions over 4 ft (1.2 m) wide.

8.6.5.3.4 Sprinklers shall not be required below obstructions that are not fixed in place, such as conference tables.

8.6.5.3.5 Sprinklers installed under open gratings shall be of the intermediate level/rack storage type or otherwise shielded from the discharge of overhead sprinklers.

8.6.6 Clearance to Storage (Standard Pendent and Upright Spray Sprinklers).

8.6.6.1 The clearance between the deflector and the top of storage shall be 18 in. (457 mm) or greater.

8.6.6.2 The 18 in. (457 mm) dimension shall not limit the height of shelving on a wall or shelving against a wall in accordance with 8.6.6, 8.7.6, 8.8.6, and Section 8.9.

8.6.6.2.1 Where shelving is installed on a wall and is not directly below sprinklers, the shelves, including storage thereon, shall extend above the level of a plane located 18 in. (457 mm) below ceiling sprinkler deflectors.

8.6.6.2.2 Shelving, and any storage thereon, directly below the sprinklers shall not extend above a plane located 18 in. (457 mm) below the ceiling sprinkler deflectors.

8.6.6.3 Where other standards specify greater clearance to storage minimums, they shall be followed.

8.6.7 Ceiling Pockets (Standard Pendent and Upright Spray Sprinklers).

8.6.7.1* Except as provided in 8.6.7.2 and 8.6.7.3, sprinklers shall be required in all ceiling pockets.

Copyright 2014 National Fire Protection Association (NFPA). Licensed, by agreement, for individual use and download on October 4, 2014 to LEADER and READER for designated user PATTARAPORN SRITRAKOOL. No other reproduction or transmission in any form permitted without written permission of NFPA. For inquires or to report unauthorized use, contact licensing@nfpa.org.

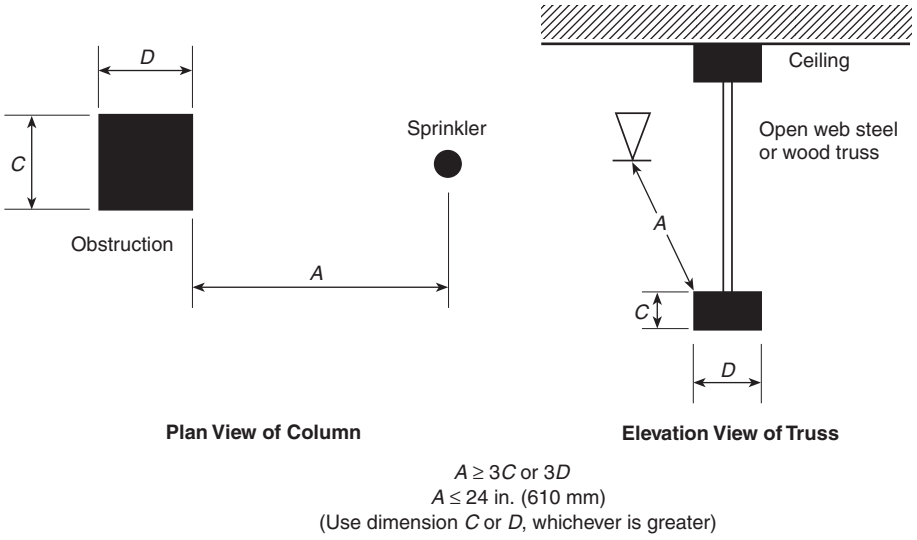

FIGURE 8.6.5.2.1.3(B) Minimum Distance from Obstruction (SSU/SSP).

Table 8.6.5.2.2 Suspended or Floor-Mounted Obstructions in Light Hazard Occupancies Only (SSU/SSP)

Horizontal Distance *(A)*	Minimum Vertical Distance Below Deflector *(B)* (in.)
6 in. or less	3
More than 6 in. to 9 in.	4
More than 9 in. to 12 in.	6
More than 12 in. to 15 in.	8
More than 15 in. to 18 in.	9½
More than 18 in. to 24 in.	12½
More than 24 in. to 30 in.	15½
More than 30 in.	18

For SI units, 1 in. = 25.4 mm.
Note: For *A* and *B*, refer to Figure 8.6.5.2.2.

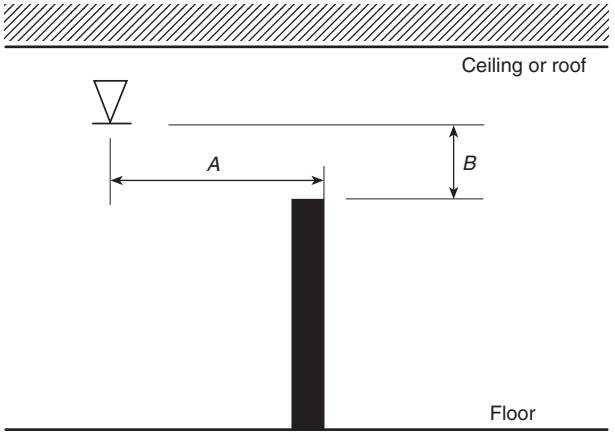

FIGURE 8.6.5.2.2 Suspended or Floor-Mounted Obstruction in Light Hazard Occupancies Only (SSU/SSP).

8.6.7.2 Sprinklers shall not be required in ceiling pockets where all of the following are met:

(1) The total volume of the unprotected ceiling pocket does not exceed 1000 ft^3 (28.3 m^3).
(2) The depth of the unprotected ceiling pocket does not exceed 36 in. (914 mm).
(3) The entire floor under the unprotected ceiling pocket is protected by sprinklers at the lower ceiling elevation.
(4)*The total size of all unprotected ceiling pockets in the same compartment within 10 ft (3 m) of each other does not exceed 1000 ft^3 (28.3 m^3).
(5) The unprotected ceiling pocket has noncombustible or limited-combustible finishes.
(6) Quick-response sprinklers are utilized throughout the compartment.

8.6.7.3 Sprinklers shall not be required in skylights and similar pockets in accordance with 8.5.7.

8.7 Sidewall Standard Spray Sprinklers.

8.7.1 General. All requirements of Section 8.5 shall apply to sidewall standard spray sprinklers except as modified in Section 8.7.

8.7.2 Protection Areas per Sprinkler (Standard Sidewall Spray Sprinklers).

8.7.2.1 Determination of Protection Area of Coverage.

8.7.2.1.1 The protection area of coverage per sprinkler (A_s) shall be determined as follows:

(1) Along the wall as follows:
   (a) Determine the distance between sprinklers along the wall (or to the end wall or obstruction in the case of the end sprinkler on the branch line) upstream and downstream
   (b) Choose the larger of either twice the distance to the end wall or the distance to the next sprinkler
   (c) Define dimension as *S*

Copyright 2014 National Fire Protection Association (NFPA). Licensed, by agreement, for individual use and download on October 4, 2014 to LEADER and READER for designated user PATTARAPORN SRITRAKOOL. No other reproduction or transmission in any form permitted without written permission of NFPA. For inquires or to report unauthorized use, contact licensing@nfpa.org.

(2) Across the room as follows:
   (a) Determine the distance from the wall on which the sprinkler is installed to the wall opposite the sprinklers or to the midpoint of the room where sprinklers are installed on two opposite walls *(see 8.7.3.1.5 and 8.7.3.1.6)*
   (b) Define dimension as *L*

8.7.2.1.2 The protection area of the sprinkler shall be established by multiplying the *S* dimension by the *L* dimension, as follows:

$$A_s = S \times L$$

8.7.2.2 Maximum Protection Area of Coverage.

8.7.2.2.1 The maximum allowable protection area of coverage for a sprinkler (A_s) shall be in accordance with the value indicated in Table 8.7.2.2.1.

8.7.2.2.2 In any case, the maximum area of coverage of a sprinkler shall not exceed 196 ft^2 (18.2 m^2).

8.7.3 Sprinkler Spacing (Standard Sidewall Spray Sprinklers).

8.7.3.1 Maximum Distance Between Sprinklers.

8.7.3.1.1 The maximum distance permitted between sidewall spray sprinklers shall be based on the centerline distance between sprinklers on the branch line.

8.7.3.1.2 The maximum distance between sidewall spray sprinklers or to a wall shall be measured along the slope of the ceiling.

8.7.3.1.3 Where sidewall spray sprinklers are installed along the length of a single wall of rooms or bays, they shall be spaced in accordance with the maximum spacing provisions of Table 8.7.2.2.1.

8.7.3.1.4 Sidewall spray sprinklers shall not be installed back-to-back without being separated by a continuous lintel or soffit.

8.7.3.1.4.1 The maximum width of the lintel or soffit shall not exceed 16 in. (400 mm).

8.7.3.1.4.2 The maximum width of the lintel or soffit can exceed 16 in. (400 mm) when a pendent sprinkler is installed under the lintel or soffit.

8.7.3.1.5 Where sidewall spray sprinklers are installed on two opposite walls or sides of bays, the maximum width of the room or bay shall be permitted to be up to 24 ft (7.32 m) for light hazard occupancy or 20 ft (6.1 m) for ordinary hazard occupancy, with spacing as required by Table 8.7.2.2.1.

8.7.3.1.6 Sidewall spray sprinklers shall be permitted to be installed on opposing or adjacent walls, provided no sprinkler is located within the maximum protection area of another sprinkler.

8.7.3.1.7 Where sidewall standard spray sprinklers are installed to protect areas below overhead doors within ordinary hazard occupancy spaces or rooms, protection area and maximum sprinkler spacing for light hazard as specified in Table 8.7.2.2.1 shall be permitted under the overhead doors.

8.7.3.2 Maximum Distance from Walls. The distance from sprinklers to the end walls shall not exceed one-half of the allowable distance permitted between sprinklers as indicated in Table 8.7.2.2.1.

8.7.3.3 Minimum Distance from Walls.

8.7.3.3.1 Sprinklers shall be located a minimum of 4 in. (102 mm) from an end wall.

8.7.3.3.2 The distance from the wall to the sprinkler shall be measured perpendicular to the wall.

8.7.3.4 Minimum Distance Between Sprinklers. Sprinklers shall be spaced not less than 6 ft (1.8 m) on center unless required by 8.7.4.1.3.1 or unless the sprinklers are separated by baffles that comply with the following:

(1) Baffles shall be arranged to protect the actuating elements.
(2) Baffles shall be of solid and rigid material that will stay in place before and during sprinkler operation.
(3) Baffles shall be not less than 8 in. (203 mm) long and 6 in. (152 mm) high.
(4) The tops of baffles shall extend between 2 in. and 3 in. (51 mm and 76 mm) above the deflectors.
(5) The bottoms of baffles shall extend downward to a level at least even with the deflectors.

Table 8.7.2.2.1 Protection Areas and Maximum Spacing (Standard Sidewall Spray Sprinkler)

	Light Hazard		Ordinary Hazard	
	Combustible Ceiling Finish	Noncombustible or Limited-Combustible Ceiling Finish	Combustible Ceiling Finish	Noncombustible or Limited-Combustible Ceiling Finish
Maximum distance along the wall *(S)* (ft)	14	14	10	10
Maximum room width *(L)* (ft)	12	14	10	10
Maximum protection area (ft^2)	120	196	80	100

For SI units, 1 ft = 0.3048 m; 1 ft^2 = 0.0929 m^2.

Copyright 2014 National Fire Protection Association (NFPA). Licensed, by agreement, for individual use and download on October 4, 2014 to LEADER and READER for designated user PATTARAPORN SRITRAKOOL. No other reproduction or transmission in any form permitted without written permission of NFPA. For inquires or to report unauthorized use, contact licensing@nfpa.org.

8.7.4 Deflector Position from Ceilings and Walls (Standard Sidewall Spray Sprinklers).

8.7.4.1 Distance Below Ceilings and from Walls.

8.7.4.1.1 Ceilings.

8.7.4.1.1.1 Unless the requirements of 8.7.4.1.1.2 are met, sidewall sprinkler deflectors shall be located not more than 6 in. (152 mm) or less than 4 in. (102 mm) from ceilings.

8.7.4.1.1.2 Horizontal sidewall sprinklers shall be permitted to be located in a zone 6 in. to 12 in. (152 mm to 305 mm) or 12 in. to 18 in. (305 mm to 457 mm) below noncombustible and limited-combustible ceilings where listed for such use.

8.7.4.1.2 Walls.

8.7.4.1.2.1* Vertical sidewall sprinkler deflectors shall be located not more than 6 in. (152 mm) or less than 4 in. (102 mm) from the wall from which they are projecting.

8.7.4.1.2.2 Horizontal sidewall sprinkler deflectors shall be located no more than 6 in. (152 mm), and shall be permitted to be located with their deflectors less than 4 in. (102 mm), from the wall on which they are mounted.

8.7.4.1.3 Lintels and Soffits.

8.7.4.1.3.1 Where soffits used for the installation of sidewall sprinklers exceed 8 in. (203 mm) in width or projection from the wall, additional sprinklers shall be installed below the soffit.

8.7.4.1.3.2* Where soffits used for the installation of sidewall sprinklers are less than or equal to 8 in. (203 mm) in width or projection from the wall, additional sprinklers shall not be required below the soffit when the sidewall sprinkler on the soffit is within 4 in. (102 mm) from the bottom of the soffit.

8.7.4.1.3.3* A sidewall sprinkler shall be permitted to be installed under a soffit when both the minimum distance from the sprinkler deflector to the bottom of the soffit and maximum distance from the sprinkler deflector to the high ceiling is maintained.

8.7.4.2 Deflector Orientation.

8.7.4.2.1 Deflectors of sprinklers shall be aligned parallel to ceilings or roofs.

8.7.4.2.2 Sidewall sprinklers, where installed under a sloped ceiling with a slope exceeding 2 in 12, shall be located at the high point of the slope and positioned to discharge downward along the slope.

8.7.5 Obstructions to Sprinkler Discharge (Standard Sidewall Spray Sprinklers).

8.7.5.1 Performance Objective.

8.7.5.1.1 Sprinklers shall be located so as to minimize obstructions to discharge as defined in 8.5.5.2 and 8.5.5.3, or additional sprinklers shall be provided to ensure adequate coverage of the hazard.

8.7.5.1.2 Sidewall sprinklers shall be installed no closer than 4 ft (1.2 m) from light fixtures or similar obstructions.

8.7.5.1.3 The distance between light fixtures or similar obstructions located more than 4 ft (1.2 m) from the sprinkler shall be in conformity with Table 8.7.5.1.3 and Figure 8.7.5.1.3.

Table 8.7.5.1.3 Positioning of Sprinklers to Avoid Obstructions (Standard Sidewall Spray Sprinklers)

Distance from Sidewall Sprinkler to Side of Obstruction *(A)*	Maximum Allowable Distance of Deflector Above Bottom of Obstruction *(B)* (in.)
Less than 4 ft	Not allowed
4 ft to less than 5 ft	1
5 ft to less than 5 ft 6 in.	2
5 ft 6 in. to less than 6 ft	3
6 ft to less than 6 ft 6 in.	4
6 ft 6 in. to less than 7 ft	6
7 ft to less than 7 ft 6 in.	7
7 ft 6 in. to less than 8 ft	9
8 ft to less than 8 ft 6 in.	11
8 ft 6 in. or greater	14

For SI units, 1 in. = 25.4 mm; 1 ft = 0.3048 m.
Note: For *A* and *B*, refer to Figure 8.7.5.1.3.

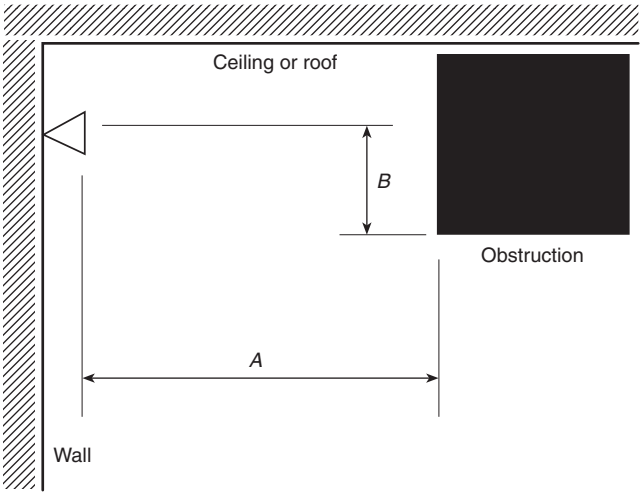

FIGURE 8.7.5.1.3 Positioning of Sprinkler to Avoid Obstruction (Standard Sidewall Spray Sprinklers).

8.7.5.1.4 Obstructions projecting from the same wall as the one on which the sidewall sprinkler is mounted shall be in accordance with Table 8.7.5.1.4 and Figure 8.7.5.1.4.

8.7.5.1.4.1 Isolated obstructions projecting from the same wall as the one on which the sidewall sprinkler is mounted shall be located a minimum of 4 in. (102 mm) from the sidewall sprinkler.

8.7.5.1.5 Sprinklers shall be permitted to be spaced on opposite sides of obstructions less than 4 ft (1.22 m) in width where the distance from the centerline of the obstruction to the sprinklers does not exceed one-half the allowable distance between sprinklers.

8.7.5.1.6* Obstructions on the wall opposite from the sidewall sprinkler shall be permitted where the obstruction is up to 2 ft (0.6 m) deep and 2 ft (0.6 m) wide.

Copyright 2014 National Fire Protection Association (NFPA). Licensed, by agreement, for individual use and download on October 4, 2014 to LEADER and READER for designated user PATTARAPORN SRITRAKOOL. No other reproduction or transmission in any form permitted without written permission of NFPA. For inquires or to report unauthorized use, contact licensing@nfpa.org.

Table 8.7.5.1.4 Positioning of Sprinklers to Avoid Obstructions Along Wall (Standard Sidewall Spray Sprinklers)

Distance from Sidewall Sprinkler to Side of Obstruction *(A)*	Maximum Allowable Distance of Deflector Above Bottom of Obstruction *(B)* (in.)
4 in. to less than 6 in.	1
6 in. to less than 1 ft	2
1 ft to less than 1 ft 6 in.	3
1 ft 6 in. to less than 2 ft	4½
2 ft to less than 2 ft 6 in.	5¾
2 ft 6 in. to less than 3 ft	7
3 ft to less than 3 ft 6 in.	8
3 ft 6 in. to less than 4 ft	9¼
4 ft to less than 4 ft 6 in.	10
4 ft 6 in. to less than 5 ft	11½
5 ft to less than 5 ft 6 in.	12¾
5 ft 6 in. to less than 6 ft	14
6 ft to less than 6 ft 6 in.	15
6 ft 6 in. to less than 7 ft	16¼
7 ft to less than 7 ft 6 in.	17½

For SI units, 1 in. = 25.4 mm; 1 ft = 0.3048 m.
Note: For *A* and *B*, refer to Figure 8.7.5.1.4.

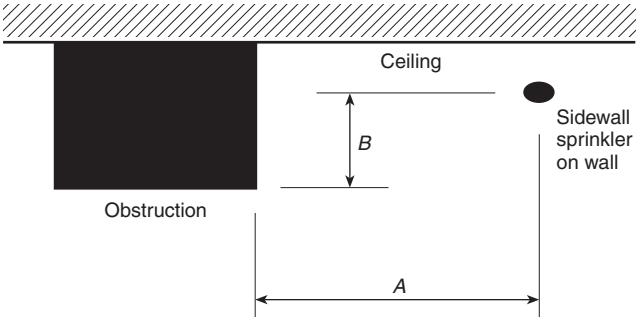

FIGURE 8.7.5.1.4 Positioning of Sprinkler to Avoid Obstruction Along Wall (Standard Sidewall Spray Sprinklers).

8.7.5.2 Obstructions to Sprinkler Discharge Pattern Development.

8.7.5.2.1 General.

8.7.5.2.1.1 Continuous or noncontinuous obstructions less than or equal to 18 in. (457 mm) below the sprinkler deflector that prevent the pattern from fully developing shall comply with this section.

8.7.5.2.1.2 Regardless of the rules of this section, solid continuous obstructions shall meet the requirements of 8.7.5.1.2 and 8.7.5.1.3.

8.7.5.2.1.3* Unless the requirements of 8.7.5.2.1.4 or 8.7.5.2.1.5 are met, sprinklers shall be positioned away from obstructions a minimum distance of three times the maximum dimension of the obstruction (e.g., truss webs and chords, pipe, columns, and fixtures). The maximum clear distance required shall be 24 in. (610 mm) and shall be positioned in accordance with Figure 8.7.5.2.1.3 where obstructions are present.

8.7.5.2.1.4 The requirements of 8.7.5.2.1.3 shall not apply to sprinkler system piping less than 3 in. (80 mm) in diameter.

8.7.5.2.1.5 The requirements of 8.7.5.2.1.3 shall not apply where sprinklers are positioned with respect to obstructions in accordance with 8.7.5.1.2, 8.7.5.1.3, and 8.7.5.1.4.

8.7.5.2.1.6* Sprinklers shall be permitted to be placed without regard to the blades of ceiling fans less than 60 in. (1.5 m) in diameter, provided the plan view of the fan is at least 50 percent open.

8.7.5.2.2 Suspended or Floor-Mounted Vertical Obstructions. The distance from sprinklers to privacy curtains, free-standing partitions, room dividers, and similar obstructions in light hazard occupancies shall be in accordance with Table 8.7.5.2.2 and Figure 8.7.5.2.2.

8.7.5.2.2.1* In light hazard occupancies, privacy curtains, as shown in Figure 8.7.5.2.2, shall not be considered obstructions where all of the following are met:

(1) The curtains are supported by fabric mesh on ceiling track.
(2) Openings in the mesh are equal to 70 percent or greater.
(3) The mesh extends a minimum of 22 in. (559 mm) down from ceiling.

8.7.5.3* Obstructions that Prevent Sprinkler Discharge from Reaching Hazard.

8.7.5.3.1 Continuous or noncontinuous obstructions that interrupt the water discharge in a horizontal plane more than 18 in. (457 mm) below the sprinkler deflector in a manner to limit the distribution from reaching the protected hazard shall comply with this section.

8.7.5.3.2 Sprinklers shall be installed under fixed obstructions over 4 ft (1.2 m) wide such as ducts, decks, open grate flooring, cutting tables, and overhead doors.

8.7.5.3.3 Sprinklers shall not be required under obstructions that are not fixed in place such as conference tables.

8.7.6* Clearance to Storage (Standard Sidewall Spray Sprinklers). The clearance between the deflector and the top of storage shall be 18 in. (457 mm) or greater.

8.8 Extended Coverage Upright and Pendent Spray Sprinklers.

8.8.1 General. All requirements of Section 8.5 shall apply to extended coverage upright and pendent sprinklers except as modified in Section 8.8.

8.8.2 Protection Areas per Sprinkler (Extended Coverage Upright and Pendent Spray Sprinklers).

8.8.2.1* Determination of Protection Area of Coverage.

8.8.2.1.1 The protection area of coverage (A_s) for extended coverage sprinklers shall be not less than that prescribed by the listing.

8.8.2.1.2 Listing dimensions shall be even-numbered square protection areas as shown in Table 8.8.2.1.2.

Copyright 2014 National Fire Protection Association (NFPA). Licensed, by agreement, for individual use and download on October 4, 2014 to LEADER and READER for designated user PATTARAPORN SRITRAKOOL. No other reproduction or transmission in any form permitted without written permission of NFPA. For inquires or to report unauthorized use, contact licensing@nfpa.org.

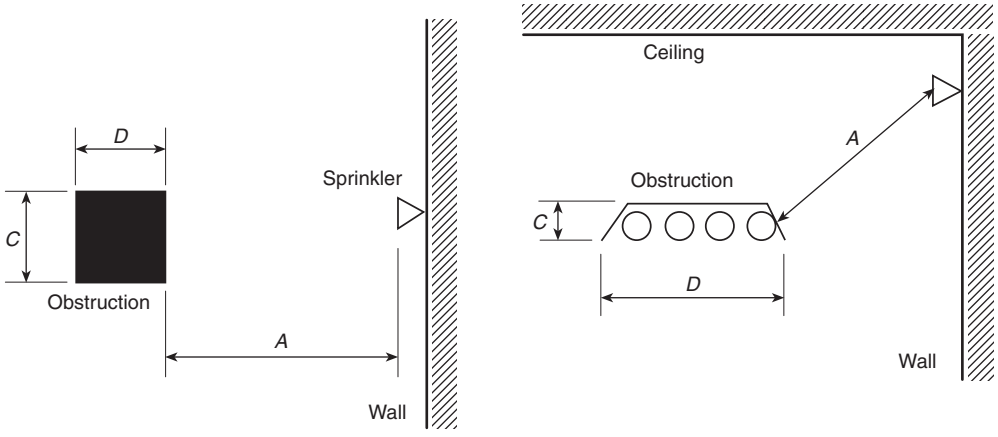

FIGURE 8.7.5.2.1.3 Minimum Distance from Obstruction (Standard Sidewall Spray Sprinkler).

Table 8.7.5.2.2 Suspended or Floor-Mounted Obstructions (Standard Sidewall Spray Sprinklers) in Light Hazard Occupancies Only

Horizontal Distance *(A)*	Minimum Vertical Distance Below Deflector *(B)* (in.)
6 in. or less	3
More than 6 in. to 9 in.	4
More than 9 in. to 12 in.	6
More than 12 in. to 15 in.	8
More than 15 in. to 18 in.	9½
More than 18 in. to 24 in.	12½
More than 24 in. to 30 in.	15½
More than 30 in.	18

For SI units, 1 in. = 25.4 mm.
Note: For *A* and *B*, refer to Figure 8.7.5.2.2.

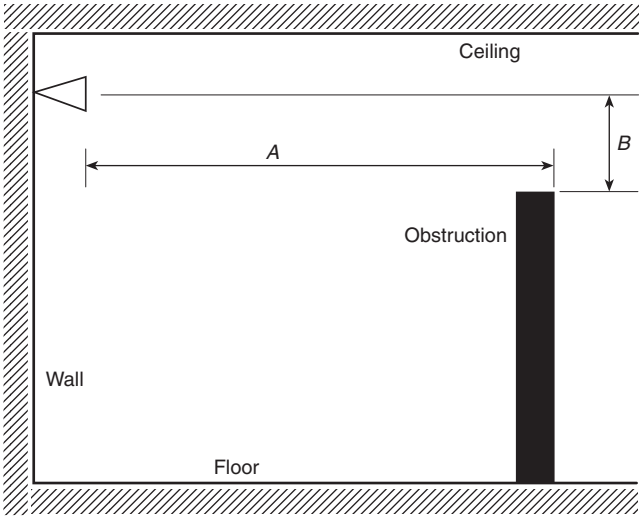

FIGURE 8.7.5.2.2 Suspended or Floor-Mounted Obstruction (Standard Sidewall Spray Sprinklers) in Light Hazard Occupancy Only.

8.8.2.1.3 Determination of the protection area of coverage and sprinkler spacing for sprinklers listed for extended coverage extra hazard or high-piled storage shall be permitted to be spaced in accordance with the requirements of 8.5.2 and 8.5.3 and shall not exceed 14 ft (4.3 m) maximum spacing and 196 ft^2 (18.2 m^2) maximum area per sprinkler or 15 ft (4.6 m) maximum spacing and 144 ft^2 (13.4 m^2) maximum area per sprinkler.

8.8.2.2 Maximum Protection Area of Coverage.

8.8.2.2.1* The maximum allowable area of coverage for a sprinkler (A_s) shall be in accordance with the value indicated in Table 8.8.2.1.2.

8.8.2.2.2 In any case, the maximum area of coverage of a sprinkler shall not exceed 400 ft^2 (37.2 m^2).

8.8.3 Sprinkler Spacing (Extended Coverage Upright and Pendent Spray Sprinklers).

8.8.3.1 Maximum Distance Between Sprinklers.

8.8.3.1.1 The maximum distance permitted between sprinklers shall be based on the centerline distance between sprinklers on the branch line or on adjacent branch lines.

8.8.3.1.2 The maximum distance shall be measured along the slope of the ceiling.

8.8.3.1.3 The maximum distance permitted between sprinklers shall comply with Table 8.8.2.1.2.

Copyright 2014 National Fire Protection Association (NFPA). Licensed, by agreement, for individual use and download on October 4, 2014 to LEADER and READER for designated user PATTARAPORN SRITRAKOOL. No other reproduction or transmission in any form permitted without written permission of NFPA. For inquires or to report unauthorized use, contact licensing@nfpa.org.

Table 8.8.2.1.2 Protection Areas and Maximum Spacing (Extended Coverage Upright and Pendent Spray Sprinklers)

	Light Hazard		Ordinary Hazard		Extra Hazard		High-Piled Storage	
Construction Type	Protection Area (ft^2)	Spacing (ft)	Protection Area (ft^2)	Spacing (ft)	Protection Area (ft^2)	Spacing (ft)	Protection Area (ft^2)	Spacing (ft)
Unobstructed	400	20	400	20	—	—	—	—
	324	18	324	18	—	—	—	—
	256	16	256	16	—	—	—	—
	—	—	196	14	196	14	196	14
	—	—	144	12	144	15	144	15
Obstructed noncombustible (when specifically listed for such use)	400	20	400	20	—	—	—	—
	324	18	324	18	—	—	—	—
	256	16	256	16	—	—	—	—
	—	—	196	14	196	14	196	14
	—	—	144	12	144	15	144	15
Obstructed combustible	N/A	N/A	N/A	N/A	N/A	N/A	N/A	N/A

For SI units, 1 ft = 0.3048 m; 1 ft^2 = 0.0929 m^2.

8.8.3.2 Maximum Distance from Walls.

8.8.3.2.1 The distance from sprinklers to walls shall not exceed one-half of the allowable distance permitted between sprinklers as indicated in Table 8.8.2.1.2.

8.8.3.2.2 The distance from the wall to the sprinkler shall be measured perpendicular to the wall.

8.8.3.2.3 Where walls are angled or irregular, the maximum horizontal distance between a sprinkler and any point of floor area protected by that sprinkler shall not exceed 0.75 times the allowable distance permitted between sprinklers.

8.8.3.3 Minimum Distance from Walls. Sprinklers shall be located a minimum of 4 in. (102 mm) from a wall unless listed for distances less than 4 in. (102 mm).

8.8.3.4 Minimum Distance Between Sprinklers.

8.8.3.4.1 Unless the requirements of 8.8.3.4.2 are met, sprinklers shall be spaced not less than 8 ft (2.4 m) on center.

8.8.3.4.2 Sprinklers shall be permitted to be placed less than 6 ft (1.8 m) on center where the following conditions are satisfied:

(1) Baffles shall be arranged to protect the actuating elements.
(2) Baffles shall be of solid and rigid material that will stay in place before and during sprinkler operation.
(3) Baffles shall be not less than 8 in. (203 mm) long and 6 in. (152 mm) high.
(4) The tops of baffles shall extend between 2 in. and 3 in. (51 mm and 76 mm) above the deflectors of upright sprinklers.
(5) The bottoms of baffles shall extend downward to a level at least even with the deflectors of pendent sprinklers.

8.8.4 Deflector Position (Extended Coverage Upright and Pendent Spray Sprinklers).

8.8.4.1 Distance Below Ceilings.

8.8.4.1.1 Unobstructed Construction.

8.8.4.1.1.1 Under unobstructed construction, the distance between the sprinkler deflector and the ceiling shall be a minimum of 1 in. (25.4 mm) and a maximum of 12 in. (305 mm) throughout the area of coverage of the sprinkler.

8.8.4.1.1.2 The requirements of 8.8.4.1.1.1 shall not apply where ceiling-type sprinklers (concealed, recessed, and flush types) have the operating element above the ceiling and the deflector located nearer to the ceiling where installed in accordance with their listing.

8.8.4.1.1.3 The requirements of 8.8.4.1.1.1 shall not apply where sprinklers are listed for use under other ceiling construction features or for different distances where they shall be permitted to be installed in accordance with their listing.

8.8.4.1.1.4 The requirements of 8.8.4.1.1.1 shall not apply for light and ordinary hazard occupancies with ceilings of noncombustible or limited-combustible construction.

(A)* Where a vertical change in ceiling elevation within the area of coverage of the sprinkler creates a distance of more than 36 in. (914 mm) between the upper ceiling and the sprinkler deflector, a vertical plane extending down from the ceiling at the change in elevation shall be considered a wall for the purpose of sprinkler spacing.

(B)* Where the distance between the upper ceiling and the sprinkler deflector is less than or equal to 36 in. (914 mm), the sprinklers shall be permitted to be spaced as though the ceiling were flat, provided the obstruction rules and ceiling pocket rules are observed.

8.8.4.1.2 Obstructed Construction. Under obstructed construction, the sprinkler deflector shall be located in accordance with one of the following arrangements:

(1) Installed with the deflectors within the horizontal planes of 1 in. to 6 in. (25.4 mm to 152 mm) below the structural members and a maximum distance of 22 in. (559 mm) below the ceiling/roof deck
(2) Installed with the deflectors at or above the bottom of the structural member to a maximum of 22 in. (559 mm) below the ceiling/roof deck where the sprinkler is installed in conformance with 8.8.5.1.2
(3) Installed in each bay of obstructed construction, with the deflectors located a minimum of 1 in. (25.4 mm) and a maximum of 12 in. (305 mm) below the ceiling

Copyright 2014 National Fire Protection Association (NFPA). Licensed, by agreement, for individual use and download on October 4, 2014 to LEADER and READER for designated user PATTARAPORN SRITRAKOOL. No other reproduction or transmission in any form permitted without written permission of NFPA. For inquires or to report unauthorized use, contact licensing@nfpa.org.

(4) Installed in accordance with their listing where sprinklers are listed for use under other ceiling construction features or for different distances

8.8.4.1.3* Peaked Roofs and Ceilings. Sprinklers under or near the peak of a roof or ceiling shall have deflectors located not more than 3 ft (0.9 m) vertically down from the peak in accordance with Figure 8.6.4.1.3.1(a) and Figure 8.6.4.1.3.1(b).

8.8.4.2 Deflector Orientation. Deflectors of sprinklers shall be aligned parallel to ceilings or roofs.

8.8.5 Obstructions to Sprinkler Discharge (Extended Coverage Upright and Pendent Spray Sprinklers).

8.8.5.1 Performance Objective.

8.8.5.1.1 Sprinklers shall be located so as to minimize obstructions to discharge as defined in 8.8.5.2 and 8.8.5.3, or additional sprinklers shall be provided to ensure adequate coverage of the hazard.

8.8.5.1.2* Sprinklers shall be arranged to comply with one of the following arrangements:

(1) Sprinklers shall be in accordance with 8.5.5.2, Table 8.8.5.1.2, and Figure 8.8.5.1.2(a).
(2) Sprinklers shall be permitted to be spaced on opposite sides of obstructions not exceeding 4 ft (1.2 m) in width provided the distance from the centerline of the obstruction to the sprinklers does not exceed one-half the allowable distance permitted between sprinklers.
(3) Obstructions located against the wall and that are not over 30 in. (762 mm) in width shall be permitted to be protected in accordance with Figure 8.8.5.1.2(b).
(4) Obstructions located against the wall and that are not over 24 in. (610 mm) in width shall be permitted to be protected in accordance with Figure 8.8.5.1.2(c). The maximum distance between the sprinkler and the wall shall be measured from the sprinkler to the wall behind the obstruction and not to the face of the obstruction.

8.8.5.2 Obstructions to Sprinkler Discharge Pattern Development.

8.8.5.2.1 General.

8.8.5.2.1.1 Continuous or noncontinuous obstructions less than or equal to 18 in. (457 mm) below the sprinkler deflector that prevent the pattern from fully developing shall comply with 8.8.5.2.

8.8.5.2.1.2 Regardless of the rules of this section, solid continuous obstructions shall meet the applicable requirements of 8.8.5.1.2.

8.8.5.2.1.3* Unless the requirements of 8.8.5.2.1.4 through 8.8.5.2.1.8 are met, sprinklers shall be positioned away from obstructions a minimum distance of four times the maximum dimension of the obstruction (e.g., truss webs and chords, pipe, columns, and fixtures). The maximum clear distance required shall be 36 in. (914 mm) in accordance with Figure 8.8.5.2.1.3.

8.8.5.2.1.4 Sprinklers shall be permitted to be spaced on opposite sides of the obstruction where the distance from the centerline of the obstruction to the sprinklers does not exceed one-half the allowable distance between sprinklers.

Table 8.8.5.1.2 Position of Sprinklers to Avoid Obstructions to Discharge (Extended Coverage Upright and Pendent Spray Sprinklers)

Distance from Sprinklers to Side of Obstruction *(A)*	Maximum Allowable Distance of Deflector Above Bottom of Obstruction *(B)* (in.)
Less than 1 ft	0
1 ft to less than 1 ft 6 in.	0
1 ft 6 in. to less than 2 ft	1
2 ft to less than 2 ft 6 in.	1
2 ft 6 in. to less than 3 ft	1
3 ft to less than 3 ft 6 in.	3
3 ft 6 in. to less than 4 ft	3
4 ft to less than 4 ft 6 in.	5
4 ft 6 in. to less than 5 ft	7
5 ft to less than 5 ft 6 in.	7
5 ft 6 in. to less than 6 ft	7
6 ft to less than 6 ft 6 in.	9
6 ft 6 in. to less than 7 ft	11
7 ft to less than 7 ft 6 in.	14
7 ft 6 in. to less than 8 ft	14
8 ft to less than 8 ft 6 in.	15
8 ft 6 in. to less than 9 ft	17
9 ft to less than 9 ft 6 in.	19
9 ft 6 in. to less than 10 ft	21

For SI units, 1 in. = 25.4 mm; 1 ft = 0.3048 m.
Note: For *A* and *B*, refer to Figure 8.8.5.1.2(a).

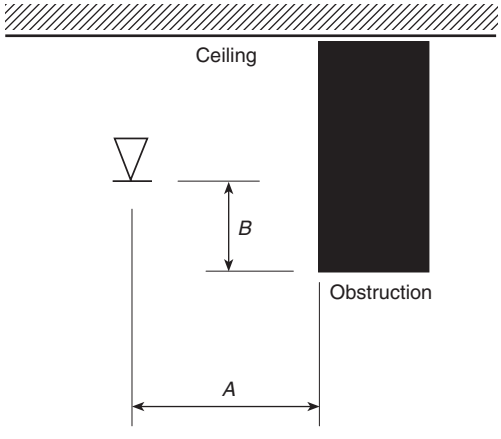

FIGURE 8.8.5.1.2(a) Position of Sprinkler to Avoid Obstruction to Discharge (Extended Coverage Upright and Pendent Spray Sprinklers).

8.8.5.2.1.5 Sprinklers shall be permitted to be located one-half the distance between the obstructions where the obstruction consists of wood bar joists 20 in. (0.51 m) or greater apart, provided that the top and bottom chords of the wood bar joist are not greater than 4 in. (102 mm) (nominal) in width and bar members do not exceed 1 in. (25.4 mm) in width.

Copyright 2014 National Fire Protection Association (NFPA). Licensed, by agreement, for individual use and download on October 4, 2014 to LEADER and READER for designated user PATTARAPORN SRITRAKOOL. No other reproduction or transmission in any form permitted without written permission of NFPA. For inquires or to report unauthorized use, contact licensing@nfpa.org.

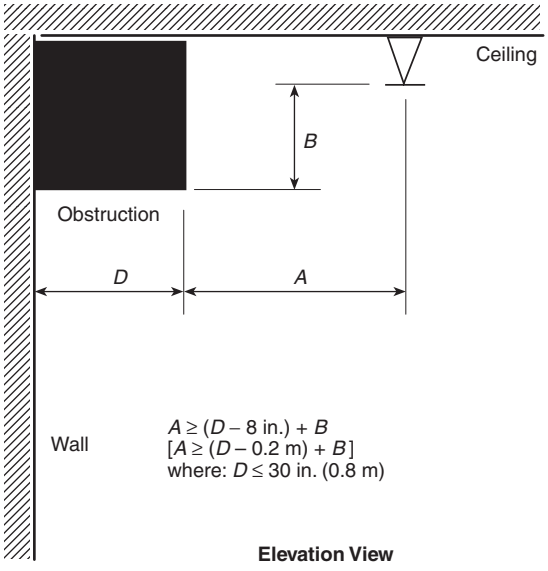

FIGURE 8.8.5.1.2(b) Obstructions Against Walls (Extended Coverage Upright and Pendent Spray Sprinklers).

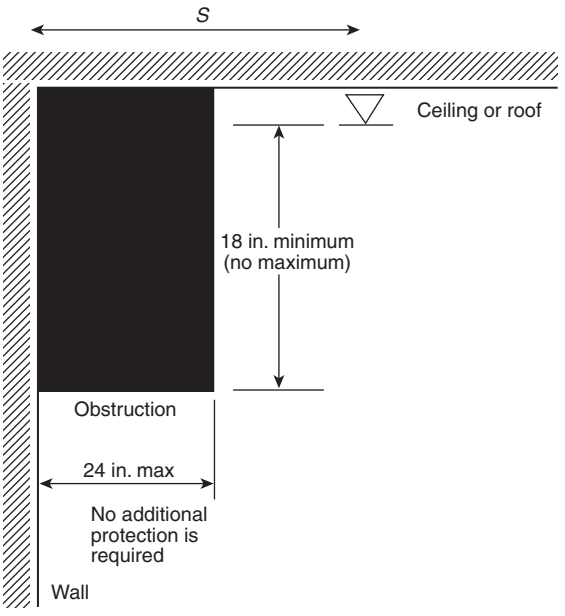

FIGURE 8.8.5.1.2(c) Obstructions Against Walls (Extended Coverage Upright and Pendent Spray Sprinklers).

8.8.5.2.1.6 Sprinklers shall be permitted to be installed on the centerline of a truss or bar joist or directly above a beam, provided that the truss chord or beam, dimension is not more than 8 in. (203 mm) and the sprinkler deflector is located at least 6 in. (152 mm) above the structural member and where the sprinkler is positioned at a distance four times greater than the maximum dimension of the web members away from the web members.

8.8.5.2.1.7 The requirements of 8.8.5.2.1.3 shall not apply to sprinkler system piping less than 3 in. (80 mm) in diameter.

8.8.5.2.1.8 The requirements of 8.8.5.2.1.3 shall not apply to sprinklers positioned with respect to obstructions in accordance with 8.8.5.1.2.

8.8.5.2.1.9* Sprinklers shall be permitted to be placed without regard to the blades of ceiling fans less than 60 in. (1.5 m) in diameter, provided the plan view of the fan is at least 50 percent open.

8.8.5.2.2 Suspended or Floor-Mounted Vertical Obstructions. The distance from sprinklers to privacy curtains, freestanding partitions, room dividers, and similar obstructions in light hazard occupancies shall be in accordance with Table 8.8.5.2.2 and Figure 8.8.5.2.2.

8.8.5.2.2.1 In light hazard occupancies, privacy curtains, as shown in Figure 8.8.5.2.2, shall not be considered obstructions where all of the following are met:

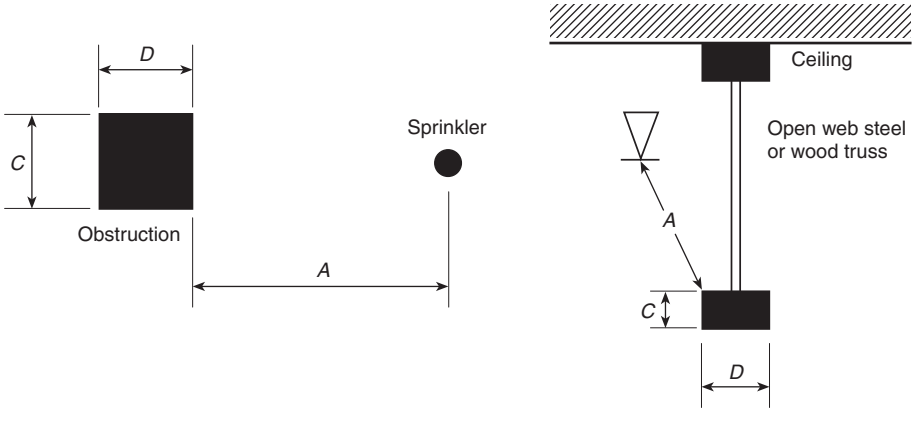

$A \geq 4C$ or $4D$
$A \leq 36$ in. (914 mm)
(Use dimension C or D, whichever is greater)

FIGURE 8.8.5.2.1.3 Minimum Distance from Obstruction (Extended Coverage Upright and Pendent Spray Sprinklers).

Copyright 2014 National Fire Protection Association (NFPA). Licensed, by agreement, for individual use and download on October 4, 2014 to LEADER and READER for designated user PATTARAPORN SRITRAKOOL. No other reproduction or transmission in any form permitted without written permission of NFPA. For inquires or to report unauthorized use, contact licensing@nfpa.org.

Table 8.8.5.2.2 Suspended or Floor-Mounted Obstructions (Extended Coverage Upright and Pendent Spray Sprinklers) in Light Hazard Occupancies Only

Horizontal Distance *(A)*	Minimum Vertical Distance Below Deflector *(B)* (in.)
6 in. or less	3
More than 6 in. to 9 in.	4
More than 9 in. to 12 in.	6
More than 12 in. to 15 in.	8
More than 15 in. to 18 in.	9½
More than 18 in. to 24 in.	12½
More than 24 in. to 30 in.	15½
More than 30 in.	18

For SI units, 1 in. = 25.4 mm.
Note: For *A* and *B*, refer to Figure 8.8.5.2.2.

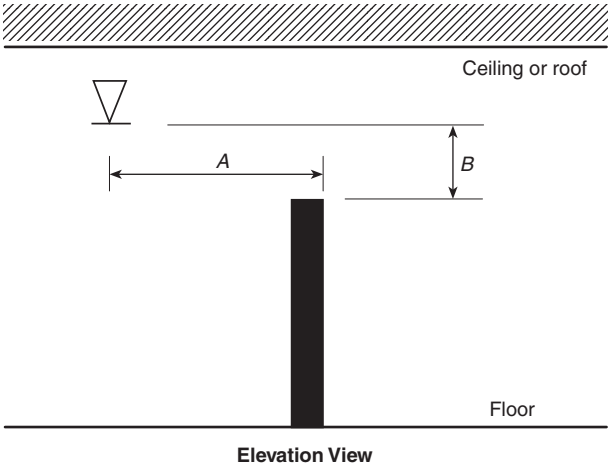

FIGURE 8.8.5.2.2 Suspended or Floor-Mounted Obstruction (Extended Coverage Upright and Pendent Spray Sprinklers) in Light Hazard Occupancy Only.

(1) The curtains are supported by fabric mesh on ceiling track.
(2) Openings in the mesh are equal to 70 percent or greater.
(3) The mesh extends a minimum of 22 in. (559 mm) down from ceiling.

8.8.5.3* Obstructions that Prevent Sprinkler Discharge from Reaching Hazard.

8.8.5.3.1 Continuous or noncontinuous obstructions that interrupt the water discharge in a horizontal plane more than 18 in. (457 mm) below the sprinkler deflector in a manner to limit the distribution from reaching the protected hazard shall comply with 8.8.5.3.

8.8.5.3.2 Sprinklers shall be installed under fixed obstructions over 4 ft (1.2 m) wide such as ducts, decks, open grate flooring, cutting tables, and overhead doors.

8.8.5.3.3 Sprinklers shall not be required under obstructions that are not fixed in place such as conference tables.

8.8.5.3.4 Sprinklers installed under open gratings shall be of the intermediate level/rack storage type or otherwise shielded from the discharge of overhead sprinklers.

8.8.6* Clearance to Storage (Extended Coverage Upright and Pendent Spray Sprinklers).

8.8.6.1 The clearance between the deflector and the top of storage shall be 18 in. (457 mm) or greater.

8.8.6.2 Where other standards specify greater clearance to storage minimums, they shall be followed.

8.8.7 Ceiling Pockets (Extended Coverage Upright and Pendent Spray Sprinklers).

8.8.7.1* Except as provided in 8.8.7.2 and 8.8.7.3, sprinklers shall be required in all ceiling pockets.

8.8.7.2 Sprinklers shall not be required in ceiling pockets where all of the following are met:

(1) The total volume of the unprotected ceiling pocket does not exceed 1000 ft^3 (28.3 m^3).
(2) The depth of the unprotected ceiling pocket does not exceed 36 in. (914 mm).
(3) The entire floor under the unprotected ceiling pocket is protected by sprinklers at the lower ceiling elevation.
(4)*The total size of all unprotected ceiling pockets in the same compartment within 10 ft (3 m) of each other does not exceed 1000 ft^3 (28.3 m^3).
(5) The unprotected ceiling pocket has noncombustible or limited-combustible finishes.
(6) Quick-response sprinklers are utilized throughout the compartment.

8.8.7.3 Sprinklers shall not be required in skylights and similar pockets in accordance with 8.5.7.

8.9* Extended Coverage Sidewall Spray Sprinklers.

8.9.1 General. All requirements of Section 8.5 shall apply to extended coverage sidewall spray sprinklers except as modified in Section 8.9.

8.9.2 Protection Areas per Sprinkler (Extended Coverage Sidewall Spray Sprinklers).

8.9.2.1* Determination of Protection Area of Coverage.

8.9.2.1.1 The protection area of coverage per sprinkler (A_s) for extended coverage sidewall sprinklers shall be not less than that prescribed by the listing.

8.9.2.1.2 Listing dimensions shall be in 2 ft (0.61 m) increments up to 28 ft (8.5 m).

8.9.2.2 Maximum Protection Area of Coverage.

8.9.2.2.1 The maximum allowable protection area of coverage for a sprinkler (A_s) shall be in accordance with the value indicated in Table 8.9.2.2.1.

8.9.2.2.2 In any case, the maximum area of coverage of a sprinkler shall not exceed 400 ft^2 (37.2 m^2).

8.9.3 Sprinkler Spacing (Extended Coverage Sidewall Spray Sprinklers).

8.9.3.1 Maximum Distance Between Sprinklers.

8.9.3.1.1 The maximum distance permitted between sprinklers shall be based on the centerline distance between sprinklers on the branch line along the wall.

Copyright 2014 National Fire Protection Association (NFPA). Licensed, by agreement, for individual use and download on October 4, 2014 to LEADER and READER for designated user PATTARAPORN SRITRAKOOL. No other reproduction or transmission in any form permitted without written permission of NFPA. For inquires or to report unauthorized use, contact licensing@nfpa.org.

Table 8.9.2.2.1 Protection Area and Maximum Spacing for Extended Coverage Sidewall Spray Sprinklers

Construction Type	Light Hazard				Ordinary Hazard			
	Protection Area		Spacing		Protection Area		Spacing	
	ft^2	m^2	ft	m	ft^2	m^2	ft	m
Unobstructed, smooth, flat	400	37.2	28	8.5	400	37.2	24	7.3

8.9.3.1.2 Where sprinklers are installed along the length of a single wall of rooms or bays, they shall be spaced in accordance with the maximum spacing provisions of Table 8.9.2.2.1.

8.9.3.1.3 Sidewall sprinklers shall not be installed back-to-back without being separated by a continuous lintel, soffit, or baffle.

8.9.3.1.4 Sidewall sprinklers shall be permitted to be installed on opposing or adjacent walls, provided no sprinkler is located within the maximum protection area of another sprinkler.

8.9.3.2 Maximum Distance from Walls. The distance from sprinklers to the end walls shall not exceed one-half of the allowable distance permitted between sprinklers as indicated in Table 8.9.2.2.1.

8.9.3.3 Minimum Distance from Walls.

8.9.3.3.1 Sprinklers shall be located a minimum of 4 in. (102 mm) from an end wall.

8.9.3.3.2 The distance from the wall to the sprinkler shall be measured perpendicular to the wall.

8.9.3.4 Minimum Distance Between Sprinklers. Sprinklers shall be not located within the maximum protection area of any other sprinkler unless required by 8.9.4.1.4.1 or separated by baffles that comply with the following:

(1) Baffles shall be arranged to protect the actuating elements.
(2) Baffles shall be of solid and rigid material that will stay in place before and during sprinkler operation.
(3) Baffles shall be not less than 8 in. (203 mm) long and 6 in. (152 mm) high.
(4) The tops of baffles shall extend between 2 in. and 3 in. (51 mm and 76 mm) above the deflectors.
(5) The bottoms of baffles shall extend downward to a level at least even with the deflectors.

8.9.4 Deflector Position from Ceilings and Walls (Extended Coverage Sidewall Spray Sprinklers).

8.9.4.1 Distance Below Ceilings and from Walls to Which Sprinklers Are Mounted.

8.9.4.1.1 Ceilings.

8.9.4.1.1.1 Unless the requirements of 8.9.4.1.1.2 are met, sidewall sprinkler deflectors shall be located not more than 6 in. (152 mm) nor less than 4 in. (102 mm) from ceilings.

8.9.4.1.1.2 Horizontal sidewall sprinklers shall be permitted to be located in a zone 6 in. to 12 in. (152 mm to 305 mm) or 12 in. to 18 in. (305 mm to 457 mm) below noncombustible or limited-combustible ceilings where listed for such use.

8.9.4.1.2 Walls.

8.9.4.1.2.1* Sidewall sprinkler deflectors shall be located not more than 6 in. (152 mm) or less than 4 in. (102 mm) from walls on which they are mounted.

8.9.4.1.2.2 Horizontal sidewall sprinklers shall be permitted to be located with their deflectors less than 4 in. (102 mm) from the wall on which they are mounted.

8.9.4.1.3 Lintels and Soffits.

8.9.4.1.3.1* Where soffits used for the installation of sidewall sprinklers are less than or equal to 8 in. (203 mm) in width or projection from the wall, additional sprinklers shall not be required below the soffit when the sidewall sprinkler on the soffit is within 4 in. (102 mm) from the bottom of the soffit.

8.9.4.1.3.2* A sidewall sprinkler shall be permitted to be installed under a soffit when both the minimum distance from the sprinkler deflector to the bottom of the soffit and the maximum distance from the sprinkler deflector to the high ceiling are maintained.

8.9.4.1.4* Soffits and Cabinets in Residential Areas/Occupancies. Where soffits are used for the installation of sidewall sprinklers, the sprinklers and soffits shall be installed in accordance with 8.9.4.1.4.1, 8.9.4.1.4.2, or 8.9.4.1.4.3.

8.9.4.1.4.1 Where soffits exceed more than 8 in. (203 mm) in width or projection from the wall, pendent sprinklers shall be installed under the soffit.

8.9.4.1.4.2 Sidewall sprinklers shall be permitted to be installed in the face of a soffit located directly over cabinets, without requiring additional sprinklers below the soffit or cabinets, where the soffit does not project horizontally more than 12 in. (305 mm) from the wall.

8.9.4.1.4.3 Where sidewall sprinklers are more than 3 ft (0.91 m) above the top of cabinets, the sprinkler shall be permitted to be installed on the wall above the cabinets where the cabinets are no greater than 12 in. (305 mm) from the wall.

8.9.4.2 Deflector Orientation.

8.9.4.2.1 Deflectors of sprinklers shall be aligned parallel to ceilings or roofs.

8.9.4.2.2 Sidewall sprinklers, where installed under a sloped ceiling with a slope exceeding 2 in 12, shall be located at the high point of the slope and positioned to discharge downward along the slope.

Copyright 2014 National Fire Protection Association (NFPA). Licensed, by agreement, for individual use and download on October 4, 2014 to LEADER and READER for designated user PATTARAPORN SRITRAKOOL. No other reproduction or transmission in any form permitted without written permission of NFPA. For inquires or to report unauthorized use, contact licensing@nfpa.org.

8.9.4.2.3 Sidewall sprinklers specifically listed for other ceiling configurations shall be permitted to be installed in accordance with the listing requirements.

8.9.5 Obstructions to Sprinkler Discharge (Extended Coverage Sidewall Spray Sprinklers).

8.9.5.1 Performance Objective.

8.9.5.1.1 Sprinklers shall be located so as to minimize obstructions to discharge as defined in 8.5.5.2 and 8.5.5.3, or additional sprinklers shall be provided to ensure adequate coverage of the hazard.

8.9.5.1.2 Sidewall sprinklers shall be installed no closer than 8 ft (2.4 m) from light fixtures or similar obstructions.

8.9.5.1.3 The distance between light fixtures or similar obstructions located more than 8 ft (2.4 m) from the sprinkler shall be in conformance with Table 8.9.5.1.3 and Figure 8.9.5.1.3.

Table 8.9.5.1.3 Positioning of Sprinklers to Avoid Obstructions (Extended Coverage Sidewall Spray Sprinklers)

Distance from Sidewall Sprinkler to Side of Obstruction *(A)*	Maximum Allowable Distance of Deflector Above Bottom of Obstruction *(B)* (in.)
Less than 8 ft	Not allowed
8 ft to less than 10 ft	1
10 ft to less than 11 ft	2
11 ft to less than 12 ft	3
12 ft to less than 13 ft	4
13 ft to less than 14 ft	6
14 ft to less than 15 ft	7
15 ft to less than 16 ft	9
16 ft to less than 17 ft	11
17 ft or greater	14

For SI units, 1 in. = 25.4 mm; 1 ft = 0.3048 m.
Note: For *A* and *B*, refer to Figure 8.9.5.1.3.

8.9.5.1.4 Continuous obstructions projecting from the same wall as the one on which the sidewall sprinkler is mounted shall be in accordance with Table 8.9.5.1.4 and Figure 8.9.5.1.4.

8.9.5.1.5 Sprinklers shall be permitted to be spaced on opposite sides of obstructions less than 4 ft (1.22 m) in width where the distance from the centerline of the obstruction to the sprinklers does not exceed one-half the allowable distance between sprinklers.

8.9.5.1.6* Obstructions on the wall opposite from the sidewall sprinkler shall be permitted where the obstruction is up to 2 ft (0.6 m) deep and 2 ft (0.6 m) wide.

8.9.5.2 Obstructions to Sprinkler Discharge Pattern Development.

8.9.5.2.1 General.

8.9.5.2.1.1 Continuous or noncontinuous obstructions less than or equal to 18 in. (457 mm) below the sprinkler deflector that prevent the pattern from fully developing shall comply with this section.

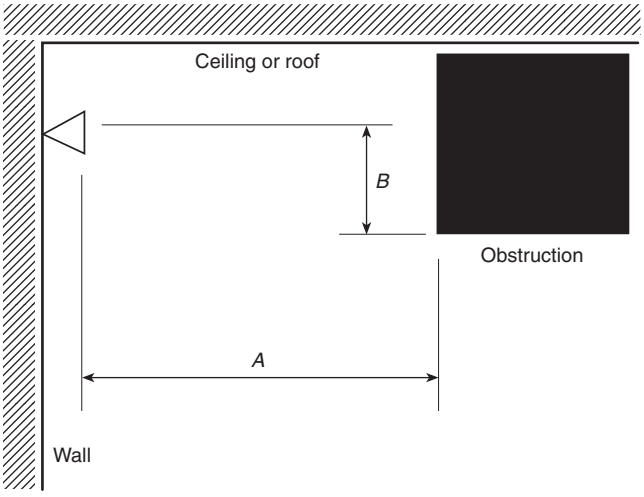

FIGURE 8.9.5.1.3 Positioning of Sprinkler to Avoid Obstruction (Extended Coverage Sidewall Spray Sprinklers).

Table 8.9.5.1.4 Positioning of Sprinklers to Avoid Obstructions Along Wall (Extended Coverage Sidewall Spray Sprinklers)

Distance from Sidewall Sprinkler to Side of Obstruction *(A)*	Maximum Allowable Distance of Deflector Above Bottom of Obstruction *(B)* (in.)
Less than 1 ft 6 in.	0
1 ft 6 in. to less than 3 ft	1
3 ft to less than 4 ft	3
4 ft to less than 4 ft 6 in.	5
4 ft 6 in. to less than 6 ft	7
6 ft to less than 6 ft 6 in.	9
6 ft 6 in. to less than 7 ft	11
7 ft to less than 7 ft 6 in.	14

For SI units, 1 in. = 25.4 mm; 1 ft = 0.3048 m.
Note: For *A* and *B*, refer to Figure 8.9.5.1.4.

8.9.5.2.1.2 Regardless of the rules of this section, solid continuous obstructions shall meet the requirements of 8.9.5.1.2 and 8.9.5.1.3.

8.9.5.2.1.3* Unless the requirements of 8.9.5.2.1.4 through 8.9.5.2.1.6 are met, sprinklers shall be positioned away from obstructions a minimum distance of four times the maximum dimension of the obstruction (e.g., truss webs and chords, pipe, columns, and fixtures). The maximum clear distance required shall be 36 in. (914 mm) from the sprinkler.

8.9.5.2.1.4 Sidewall sprinklers shall be positioned in accordance with Figure 8.9.5.2.1.4 when obstructions are present.

8.9.5.2.1.5 The requirements of 8.9.5.2.1.3 and 8.9.5.2.1.4 shall not apply where sprinklers are positioned with respect to obstructions in accordance with 8.9.5.1.2 and 8.9.5.1.3.

Copyright 2014 National Fire Protection Association (NFPA). Licensed, by agreement, for individual use and download on October 4, 2014 to LEADER and READER for designated user PATTARAPORN SRITRAKOOL. No other reproduction or transmission in any form permitted without written permission of NFPA. For inquires or to report unauthorized use, contact licensing@nfpa.org.

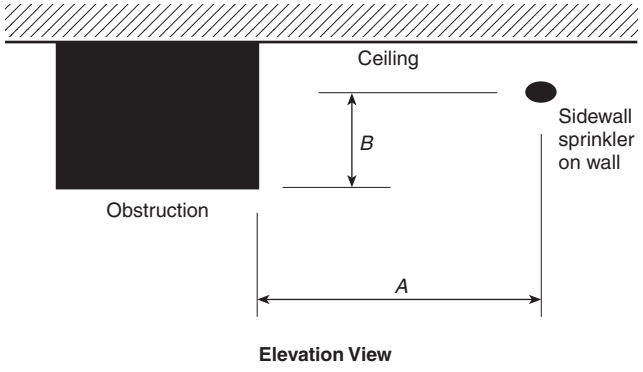

FIGURE 8.9.5.1.4 Positioning of Sprinkler to Avoid Obstruction Along Wall (Extended Coverage Sidewall Spray Sprinklers).

Table 8.9.5.2.2 Suspended or Floor-Mounted Obstructions (Extended Coverage Sidewall Sprinklers) in Light Hazard Occupancies Only

Horizontal Distance *(A)*	Minimum Allowable Distance Below Deflector *(B)* (in.)
6 in. or less	3
More than 6 in. to 9 in.	4
More than 9 in. to 12 in.	6
More than 12 in. to 15 in.	8
More than 15 in. to 18 in.	9½
More than 18 in. to 24 in.	12½
More than 24 in. to 30 in.	15½
More than 30 in.	18

For SI units, 1 in. = 25.4 mm.
Note: For *A* and *B*, refer to Figure 8.9.5.2.2.

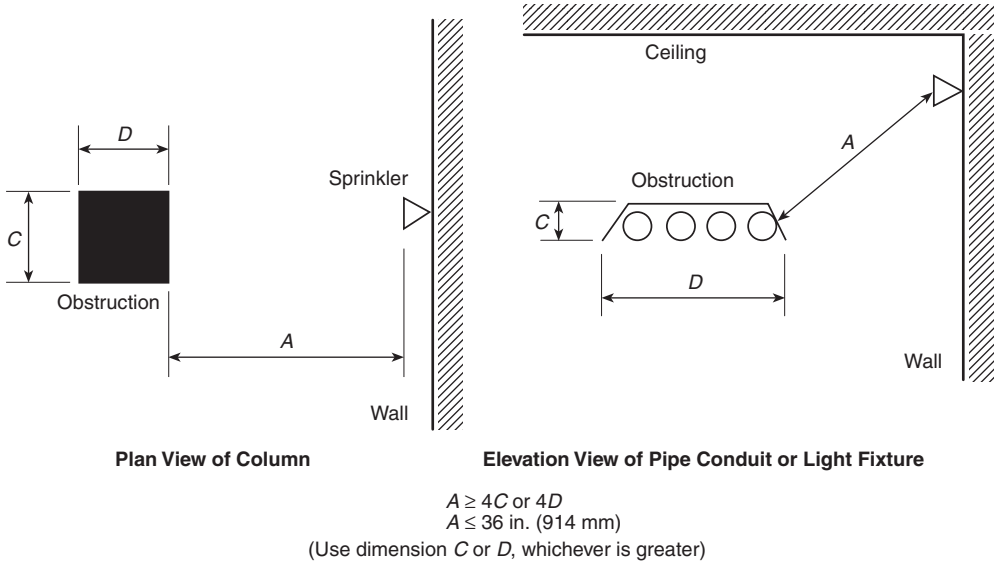

FIGURE 8.9.5.2.1.4 Minimum Distance from Obstruction (Extended Coverage Sidewall).

8.9.5.2.1.6 The requirements of 8.9.5.2.1.3 shall not apply to sprinkler system piping less than 3 in. (80 mm) in diameter.

8.9.5.2.1.7* Sprinklers shall be permitted to be placed without regard to the blades of ceiling fans less than 60 in. (1.5 m) in diameter, provided the plan view of the fan is at least 50 percent open.

8.9.5.2.2 Suspended or Floor-Mounted Vertical Obstructions. The distance from sprinklers to privacy curtains, freestanding partitions, room dividers, and similar obstructions in light hazard occupancies shall be in accordance with Table 8.9.5.2.2 and Figure 8.9.5.2.2.

8.9.5.2.2.1* In light hazard occupancies, privacy curtains, as shown in Figure 8.9.5.2.2, shall not be considered obstructions where all of the following are met:

(1) The curtains are supported by fabric mesh on ceiling track.
(2) Openings in the mesh are equal to 70 percent or greater.
(3) The mesh extends a minimum of 22 in. (559 mm) down from ceiling.

8.9.5.3* Obstructions that Prevent Sprinkler Discharge from Reaching Hazard.

8.9.5.3.1 Continuous or noncontinuous obstructions that interrupt the water discharge in a horizontal plane more than 18 in. (457 mm) below the sprinkler deflector in a manner to limit the distribution from reaching the protected hazard shall comply with this section.

8.9.5.3.2 Sprinklers shall be installed under fixed obstructions over 4 ft (1.2 m) wide, such as ducts, decks, open grate flooring, cutting tables, and overhead doors.

8.9.5.3.3 Sprinklers shall not be required under obstructions that are not fixed in place, such as conference tables.

8.10 Residential Sprinklers.

8.10.1 Reserved.

8.10.2* Listings.

8.10.2.1 Areas of coverage shall be in accordance with the manufacturer's listing.

Copyright 2014 National Fire Protection Association (NFPA). Licensed, by agreement, for individual use and download on October 4, 2014 to LEADER and READER for designated user PATTARAPORN SRITRAKOOL. No other reproduction or transmission in any form permitted without written permission of NFPA. For inquires or to report unauthorized use, contact licensing@nfpa.org.

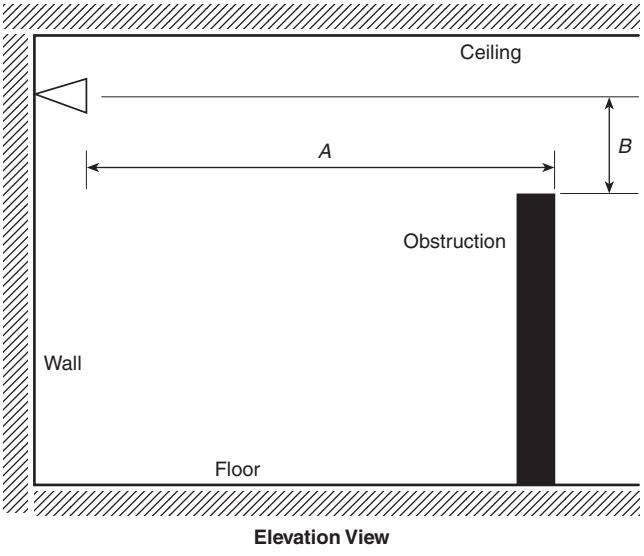

FIGURE 8.9.5.2.2 Suspended or Floor-Mounted Obstruction (Extended Coverage Sidewall Sprinklers) in Light Hazard Occupancy Only.

8.10.3 Distances Between Sprinklers.

8.10.3.1 Maximum distances between sprinklers shall be in accordance with the manufacturer's listing.

8.10.3.2 The distance between the sprinkler and the wall shall not exceed half the maximum allowable distance between sprinklers per the manufacturer's listing.

8.10.3.3 The minimum distance between sprinklers within a compartment shall be 8 ft (2.44 m), unless the listing of the sprinkler requires a greater distance, unless required by 8.10.7.1.5.1, or unless separated by baffles that comply with the following:

(1) Baffles shall be arranged to protect the actuating elements.
(2) Baffles shall be of solid and rigid material that will stay in place before and during sprinkler operation.
(3) Baffles shall be not less than 8 in. (203 mm) long and 6 in. (152 mm) high.
(4) The tops of baffles shall extend between 2 in. and 3 in. (51 mm and 76 mm) above the deflectors of upright sprinklers.
(5) The bottoms of baffles shall extend downward to a level at least even with the deflectors of pendent sprinklers.

8.10.3.4 Residential sidewall sprinklers shall be permitted to be installed on opposing or adjacent walls, provided no sprinkler is located within the maximum protection area of another sprinkler or unless separated by baffles that comply with the following:

(1) Baffles shall be arranged to protect the actuating elements.
(2) Baffles shall be of solid and rigid material that will stay in place before and during sprinkler operation.
(3) Baffles shall be not less than 8 in. (203 mm) long and 6 in. (152 mm) high.
(4) The tops of baffles shall extend between 2 in. and 3 in. (51 mm and 76 mm) above the deflectors.
(5) The bottoms of baffles shall extend downward to a level at least even with the deflectors.

8.10.3.5 The maximum distance shall be measured along the slope of the ceiling as shown in Figure 8.10.3.5(a) and Figure 8.10.3.5(b).

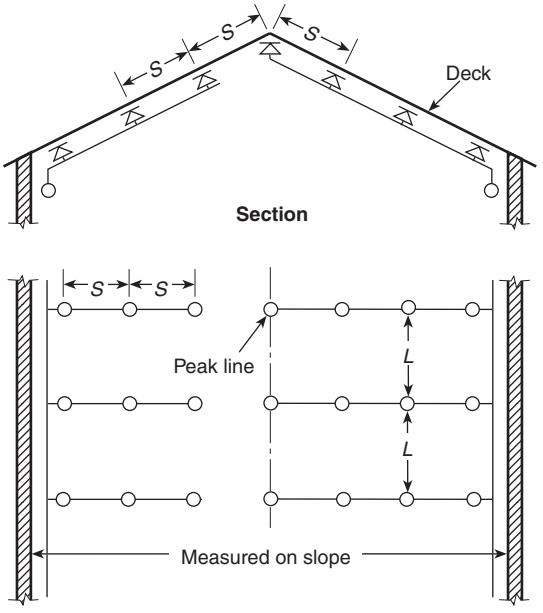

FIGURE 8.10.3.5(a) Maximum Distance Between Sprinklers with Sloped Ceilings — Arrangement A.

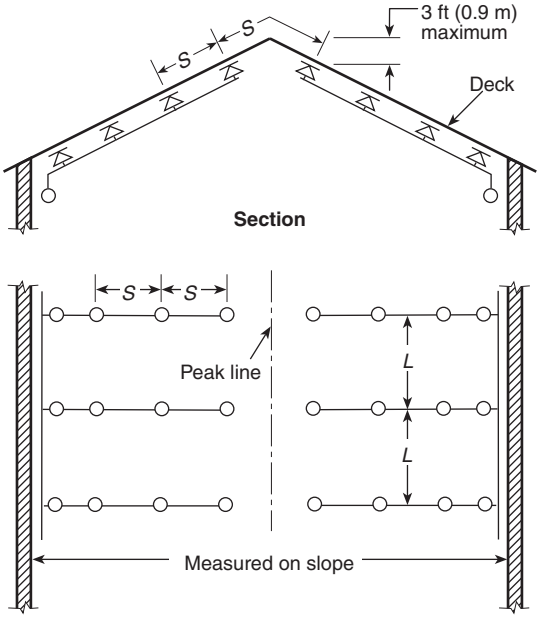

FIGURE 8.10.3.5(b) Maximum Distance Between Sprinklers with Sloped Ceilings — Arrangement B.

8.10.3.6 Where sprinklers are installed along sloped ceilings, the sprinklers shall maintain the minimum listed spacing, but no less than 8 ft (2.44 m), measured in the plan view from one sprinkler to another as shown in Figure 8.10.3.6(a) and Figure

Copyright 2014 National Fire Protection Association (NFPA). Licensed, by agreement, for individual use and download on October 4, 2014 to LEADER and READER for designated user PATTARAPORN SRITRAKOOL. No other reproduction or transmission in any form permitted without written permission of NFPA. For inquires or to report unauthorized use, contact licensing@nfpa.org.

8.10.3.6(b), or unless separated by baffles that comply with the following:

(1) Baffles shall be arranged to protect the actuating elements.
(2) Baffles shall be of solid and rigid material that will stay in place before and during sprinkler operation.
(3) Baffles shall be not less than 8 in. (203 mm) long and 6 in. (152 mm) high.
(4) The tops of baffles shall extend between 2 in. and 3 in. (51 mm and 76 mm) above the deflectors of upright sprinklers.
(5) The bottoms of baffles shall extend downward to a level at least even with the deflectors of pendent sprinklers.

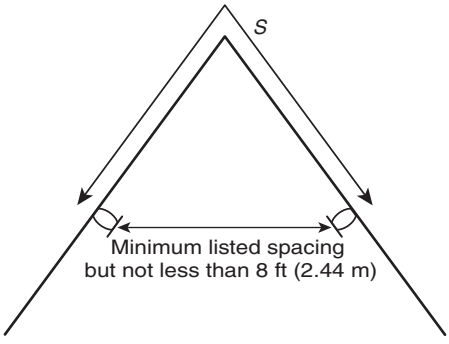

Elevation View

FIGURE 8.10.3.6(a) Minimum Distance Between Sprinklers with Sloped Ceilings — Arrangement A.

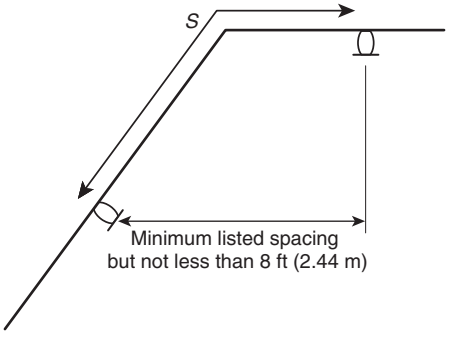

Elevation View

FIGURE 8.10.3.6(b) Minimum Distance Between Sprinklers with Sloped Ceilings — Arrangement B.

8.10.4 Deflector Position from Ceilings and Walls.

8.10.4.1 Pendent and upright sprinklers shall be positioned so that the deflectors are 1 in. to 4 in. (25 mm to 102 mm) from the ceiling unless the listing allows a greater distance.

8.10.4.2 Sidewall sprinklers shall be positioned so that the deflectors are within 4 in. to 6 in. (102 mm to 152 mm) from the ceiling unless the listing allows greater distances.

8.10.4.3 Where soffits used for the installation of sidewall sprinklers exceed 8 in. (203 mm) in width or projection from the wall, additional sprinklers shall be installed below the soffit.

8.10.4.4 Residential horizontal sidewall sprinkler deflectors shall be located no more than 6 in. (152 mm) from the wall on which they are mounted unless listed for greater distances.

8.10.4.5 The distance from sprinklers to the end walls shall not exceed one-half of the allowable distance permitted between sprinklers as indicated in the sprinkler listing.

8.10.4.6 Minimum Distance from Walls.

8.10.4.6.1 Sprinklers shall be located a minimum of 4 in. (102 mm) from an end wall.

8.10.4.6.2 The distance from the wall to the sprinkler shall be measured perpendicular to the wall.

8.10.5 Residential sprinklers installed in conformance with this standard shall follow the sprinkler obstruction rules of 8.10.6 or 8.10.7 as appropriate for their installation orientation (upright, pendent, or sidewall) and the obstruction criteria specified in the manufacturer's installation instructions.

8.10.6 Obstructions to Sprinkler Discharge (Residential Upright and Pendent Spray Sprinklers).

8.10.6.1 Performance Objective.

8.10.6.1.1 Sprinklers shall be located so as to minimize obstructions to discharge as defined in 8.10.6.2 and 8.10.6.3, or additional sprinklers shall be provided to ensure adequate coverage of the hazard.

8.10.6.1.2 Sprinklers shall be arranged to comply with one of the following arrangements:

(1) Sprinklers shall be in accordance with 8.5.5.2, Table 8.10.6.1.2, and Figure 8.10.6.1.2(a).
(2) Sprinklers shall be permitted to be spaced on opposite sides of obstructions not exceeding 4 ft (1.2 m) in width, provided the distance from the centerline of the obstruction to the sprinklers does not exceed one-half the allowable distance permitted between sprinklers.
(3) Obstructions located against the wall and that are not over 30 in. (762 mm) in width shall be permitted to be protected in accordance with Figure 8.10.6.1.2(b).
(4) Obstructions that are locatd against the wall and that are not over 24 in. (610 mm) in width shall be permitted to be protected in accordance with Figure 8.10.6.1.2(c). The maximum distance between the sprinkler and the wall shall be measured from the sprinkler to the wall behind the obstruction and not to the face of the obstruction.

8.10.6.2 Obstructions to Sprinkler Discharge Pattern Development.

8.10.6.2.1 General.

8.10.6.2.1.1 Continuous or noncontinuous obstructions less than or equal to 18 in. (457 mm) below the sprinkler deflector that prevent the pattern from fully developing shall comply with 8.10.6.2.

8.10.6.2.1.2 Regardless of the rules of this section, solid continuous obstructions shall meet the applicable requirements of 8.10.6.1.2.

8.10.6.2.1.3* Unless the requirements of 8.10.6.2.1.4 through 8.10.6.2.1.8 are met, sprinklers shall be positioned away from obstructions a minimum distance of four times the maximum

Copyright 2014 National Fire Protection Association (NFPA). Licensed, by agreement, for individual use and download on October 4, 2014 to LEADER and READER for designated user PATTARAPORN SRITRAKOOL. No other reproduction or transmission in any form permitted without written permission of NFPA. For inquires or to report unauthorized use, contact licensing@nfpa.org.

Table 8.10.6.1.2 Positioning of Sprinklers to Avoid Obstructions to Discharge (Residential Upright and Pendent Spray Sprinklers)

Distance from Sprinklers to Side of Obstruction *(A)*	Maximum Allowable Distance of Deflector Above Bottom of Obstruction *(B)* (in.)
Less than 1 ft	0
1 ft to less than 1 ft 6 in.	0
1 ft 6 in. to less than 2 ft	1
2 ft to less than 2 ft 6 in.	1
2 ft 6 in. to less than 3 ft	1
3 ft to less than 3 ft 6 in.	3
3 ft 6 in. to less than 4 ft	3
4 ft to less than 4 ft 6 in.	5
4 ft 6 in. to less than 5 ft	7
5 ft to less than 5 ft 6 in.	7
5 ft 6 in. to less than 6 ft	7
6 ft to less than 6 ft 6 in.	9
6 ft 6 in. to less than 7 ft	11
7 ft and greater	14

For SI units, 1 in. = 25.4 mm; 1 ft = 0.3048 m.
Note: For *A* and *B*, refer to Figure 8.10.6.1.2(a).

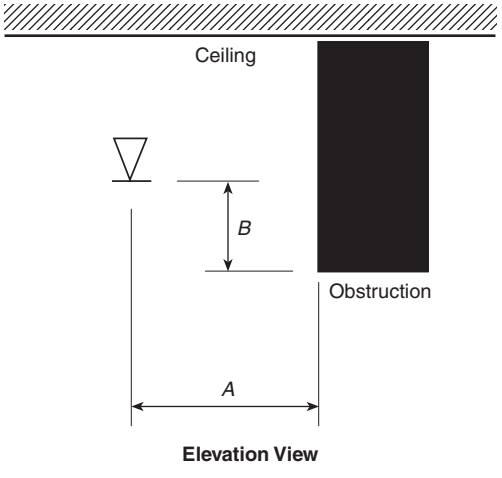

FIGURE 8.10.6.1.2(a) Positioning of Sprinkler to Avoid Obstruction to Discharge (Residential Upright and Pendent Spray Sprinklers).

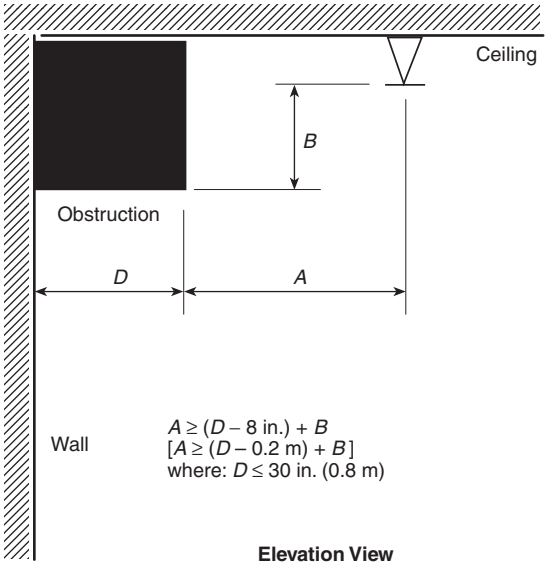

FIGURE 8.10.6.1.2(b) Obstructions Against Wall (Residential Upright and Pendent Spray Sprinklers).

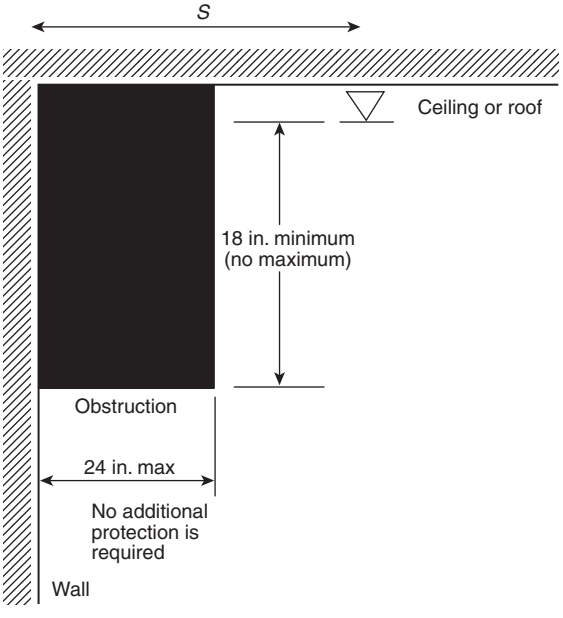

FIGURE 8.10.6.1.2(c) Obstructions Against Wall (Measurements for Residential Upright and Pendent Spray Sprinklers).

dimension of the obstruction (e.g., truss webs and chords, pipe, columns, and fixtures). The maximum clear distance required shall be 36 in. (914 mm) in accordance with Figure 8.10.6.2.1.3.

8.10.6.2.1.4 Sprinklers shall be permitted to be spaced on opposite sides of the obstruction where the distance from the centerline of the obstruction to the sprinklers does not exceed one-half the allowable distance between sprinklers.

8.10.6.2.1.5 Sprinklers shall be permitted to be located one-half the distance between the obstructions where the obstruction consists of open trusses 20 in. (0.51 m) or greater apart [24 in. (0.61 m) on center], provided that all truss members are not greater than 4 in. (102 mm) (nominal) in width and web members do not exceed 1 in. (25.4 mm) in width.

8.10.6.2.1.6 Sprinklers shall be permitted to be installed on the centerline of a truss or bar joist or directly above a beam provided that the truss chord or beam dimension is not more than 8 in. (203 mm) and the sprinkler deflector is located at least 6 in. (152 mm) above the structural member and where the sprinkler is positioned at a distance four times greater than the maximum dimension of the web members away from the web members.

Copyright 2014 National Fire Protection Association (NFPA). Licensed, by agreement, for individual use and download on October 4, 2014 to LEADER and READER for designated user PATTARAPORN SRITRAKOOL. No other reproduction or transmission in any form permitted without written permission of NFPA. For inquires or to report unauthorized use, contact licensing@nfpa.org.

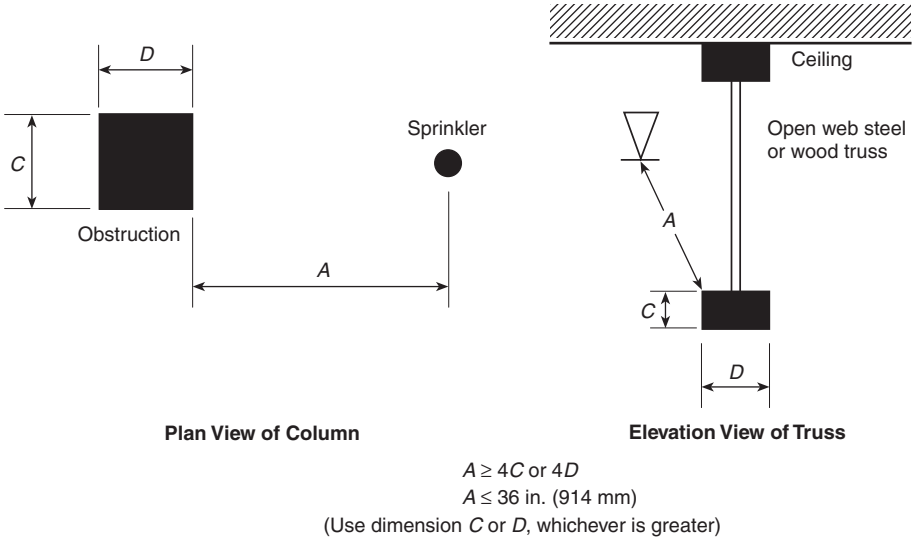

FIGURE 8.10.6.2.1.3 Minimum Distance from Obstruction (Residential Upright and Pendent Spray Sprinklers).

8.10.6.2.1.7 The requirements of 8.10.6.2.1.3 shall not apply to sprinkler system piping less than 3 in. (80 mm) in diameter.

8.10.6.2.1.8 The requirements of 8.10.6.2.1.3 shall not apply to sprinklers positioned with respect to obstructions in accordance with 8.10.6.1.2.

8.10.6.2.1.9* Sprinklers shall be permitted to be placed without regard to the blades of a ceiling fan, provided the plan view of the fan is at least 50 percent open.

8.10.6.2.2 Suspended or Floor-Mounted Vertical Obstructions. The distance from sprinklers to privacy curtains, free-standing partitions, room dividers, and similar obstructions in light hazard occupancies shall be in accordance with Table 8.10.6.2.2 and Figure 8.10.6.2.2.

Table 8.10.6.2.2 Suspended or Floor-Mounted Obstructions (Residential Upright and Pendent Spray Sprinklers) in Light Hazard Occupancies Only

Horizontal Distance *(A)*	Minimum Vertical Distance Below Deflector *(B)* (in.)
6 in. or less	3
More than 6 in. to 9 in.	4
More than 9 in. to 12 in.	6
More than 12 in. to 15 in.	8
More than 15 in. to 18 in.	9½
More than 18 in. to 24 in.	12½
More than 24 in. to 30 in.	15½
More than 30 in.	18

For SI units, 1 in. = 25.4 mm.
Note: For *A* and *B*, refer to Figure 8.10.6.2.2.

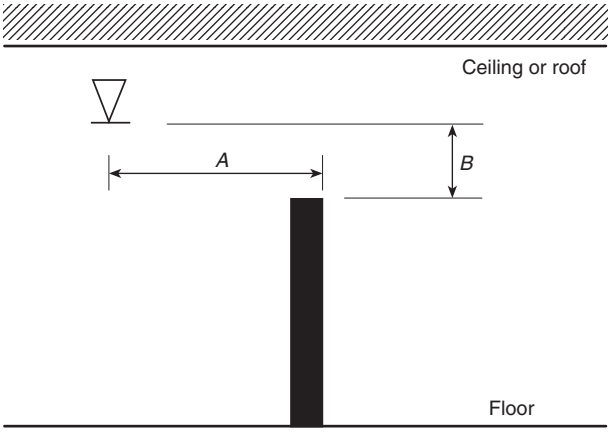

FIGURE 8.10.6.2.2 Suspended or Floor-Mounted Obstruction (Residential Upright and Pendent Spray Sprinklers) in Light Hazard Occupancy Only.

8.10.6.3* Obstructions that Prevent Sprinkler Discharge from Reaching Hazard.

8.10.6.3.1 Continuous or noncontinuous obstructions that interrupt the water discharge in a horizontal plane more than 18 in. (457 mm) below the sprinkler deflector in a manner to limit the distribution from reaching the protected hazard shall comply with 8.10.6.3.

8.10.6.3.2 Sprinklers shall be installed under fixed obstructions over 4 ft (1.2 m) wide such as stairs and landings.

8.10.6.3.3 Sprinklers shall not be required under obstructions that are not fixed in place.

8.10.6.3.4 Sprinklers installed under open gratings shall be shielded from the discharge of overhead sprinklers.

Copyright 2014 National Fire Protection Association (NFPA). Licensed, by agreement, for individual use and download on October 4, 2014 to LEADER and READER for designated user PATTARAPORN SRITRAKOOL. No other reproduction or transmission in any form permitted without written permission of NFPA. For inquires or to report unauthorized use, contact licensing@nfpa.org.

8.10.7 Obstructions to Sprinkler Discharge (Residential Sidewall Spray Sprinklers).

8.10.7.1 Performance Objective.

8.10.7.1.1 Sprinklers shall be located so as to minimize obstructions to discharge as defined in 8.5.5.2 and 8.5.5.3, or additional sprinklers shall be provided to ensure adequate coverage of the hazard.

8.10.7.1.2 Sidewall sprinklers shall be installed no closer than 8 ft (2.4 m) from light fixtures or similar obstructions.

8.10.7.1.3 The distance between light fixtures or similar obstructions located more than 8 ft (2.4 m) from the sprinkler shall be in conformance with Table 8.10.7.1.3 and Figure 8.10.7.1.3.

Table 8.10.7.1.3 Positioning of Sprinklers to Avoid Obstructions (Residential Sidewall Sprinklers)

Distance from Sidewall Sprinkler to Side of Obstruction *(A)*	Maximum Allowable Distance of Deflector Above Bottom of Obstruction *(B)* (in.)
Less than 8 ft	Not allowed
8 ft to less than 10 ft	1
10 ft to less than 11 ft	2
11 ft to less than 12 ft	3
12 ft to less than 13 ft	4
13 ft to less than 14 ft	6
14 ft to less than 15 ft	7
15 ft to less than 16 ft	9
16 ft to less than 17 ft	11
17 ft or greater	14

For SI units, 1 in. = 25.4 mm; 1 ft = 0.3048 m.
Note: For *A* and *B*, refer to Figure 8.10.7.1.3.

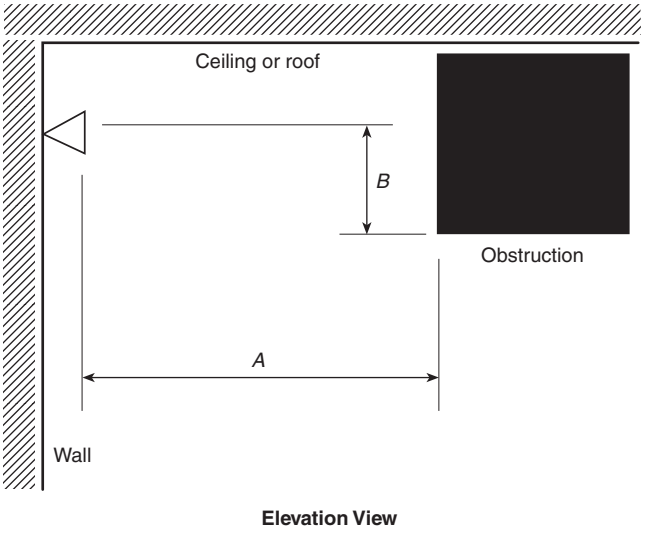

FIGURE 8.10.7.1.3 Positioning of Sprinkler to Avoid Obstruction (Residential Sidewall Sprinklers).

8.10.7.1.4 Obstructions projecting from the same wall as the one on which the sidewall sprinkler is mounted shall be in accordance with Table 8.10.7.1.4 and Figure 8.10.7.1.4.

Table 8.10.7.1.4 Positioning of Sprinklers to Avoid Obstructions Along Wall (Residential Sidewall Sprinklers)

Distance from Sidewall Sprinkler to Side of Obstruction *(A)*	Maximum Allowable Distance of Deflector Above Bottom of Obstruction *(B)* (in.)
Less than 1 ft 6 in.	0
1 ft 6 in. to less than 3 ft	1
3 ft to less than 4 ft	3
4 ft to less than 4 ft 6 in.	5
4 ft 6 in. to less than 6 ft	7
6 ft to less than 6 ft 6 in.	9
6 ft 6 in. to less than 7 ft	11
7 ft to less than 7 ft 6 in.	14

For SI units, 1 in. = 25.4 mm; 1 ft = 0.3048 m.
Note: For *A* and *B*, refer to Figure 8.10.7.1.4.

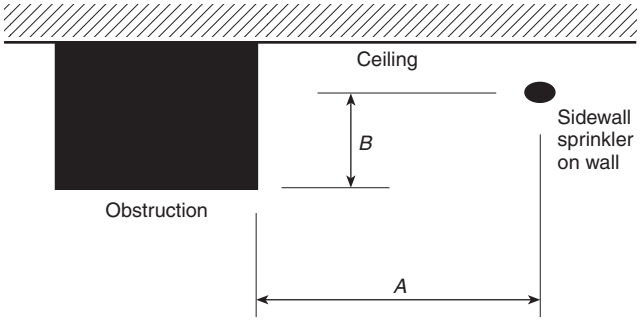

FIGURE 8.10.7.1.4 Positioning of Sprinkler to Avoid Obstruction Along Wall (Residential Sidewall Sprinklers).

8.10.7.1.5* Soffits and Cabinets. Where soffits are used for the installation of sidewall sprinklers, the sprinklers and soffits shall be installed in accordance with 8.10.7.1.5.1, 8.10.7.1.5.2, or 8.10.7.1.5.3.

8.10.7.1.5.1 Where soffits exceed more than 8 in. (203 mm) in width or projection from the wall, pendent sprinklers shall be installed under the soffit.

8.10.7.1.5.2 Sidewall sprinklers shall be permitted to be installed in the face of a soffit located directly over cabinets, without requiring additional sprinklers below the soffit or cabinets, where the soffit does not project horizontally more than 12 in. (305 mm) from the wall.

8.10.7.1.5.3 Where sidewall sprinklers are more than 3 ft (914 mm) above the top of cabinets, the sprinkler shall be permitted to be installed on the wall above the cabinets where the cabinets are no greater than 12 in. (305 mm) from the wall.

Copyright 2014 National Fire Protection Association (NFPA). Licensed, by agreement, for individual use and download on October 4, 2014 to LEADER and READER for designated user PATTARAPORN SRITRAKOOL. No other reproduction or transmission in any form permitted without written permission of NFPA. For inquires or to report unauthorized use, contact licensing@nfpa.org.

8.10.7.1.6* Obstructions on the wall opposite from the sidewall sprinkler shall be permitted where the obstruction is up to 2 ft (0.6 m) deep and 2 ft (0.6 m) wide.

8.10.7.2 Obstructions to Sprinkler Discharge Pattern Development.

8.10.7.2.1 General.

8.10.7.2.1.1 Continuous or noncontinuous obstructions less than or equal to 18 in. (457 mm) below the sprinkler deflector that prevent the pattern from fully developing shall comply with this section.

8.10.7.2.1.2 Regardless of the rules of this section, solid continuous obstructions shall meet the requirements of 8.10.7.1.2 and 8.10.7.1.3.

8.10.7.2.1.3* Unless the requirements of 8.10.7.2.1.4 through 8.10.7.2.1.7 are met, sprinklers shall be positioned away from obstructions a minimum distance of four times the maximum dimension of the obstruction.

(A) The maximum clear distance required shall be 36 in. (914 mm) from the sprinkler (e.g., truss webs and chords, pipe, columns, and fixtures).

8.10.7.2.1.4 Sidewall sprinklers shall be positioned in accordance with Figure 8.10.7.2.1.4 when obstructions are present.

8.10.7.2.1.5 The requirements of 8.10.7.2.1.3 and 8.10.7.2.1.4 shall not apply where sprinklers are positioned with respect to obstructions in accordance with 8.10.7.1.2 and 8.10.7.1.3.

8.10.7.2.1.6 The requirements of 8.10.7.2.1.3 shall not apply to sprinkler system piping less than 3 in. (80 mm) in diameter.

8.10.7.2.1.7* Sprinklers shall be permitted to be placed without regard to the blades of a ceiling fan, provided the plan view of the fan is at least 50 percent open.

8.10.7.2.2 Suspended or Floor-Mounted Vertical Obstructions. The distance from sprinklers to privacy curtains, free-standing partitions, room dividers, and similar obstructions in light hazard occupancies shall be in accordance with Table 8.10.7.2.2 and Figure 8.10.7.2.2.

Table 8.10.7.2.2 Suspended or Floor-Mounted Obstructions (Residential Sidewall Sprinklers) in Light Hazard Occupancies Only

Horizontal Distance *(A)*	Minimum Allowable Distance Below Deflector *(B)* (in.)
6 in. or less	3
More than 6 in. to 9 in.	4
More than 9 in. to 12 in.	6
More than 12 in. to 15 in.	8
More than 15 in. to 18 in.	9½
More than 18 in. to 24 in.	12½
More than 24 in. to 30 in.	15½
More than 30 in.	18

For SI units, 1 in. = 25.4 mm.
Note: For *A* and *B*, refer to Figure 8.10.7.2.2.

8.10.7.3* Obstructions that Prevent Sprinkler Discharge from Reaching Hazard.

8.10.7.3.1 Continuous or noncontinuous obstructions that interrupt the water discharge in a horizontal plane more than 18 in. (457 mm) below the sprinkler deflector in a manner to limit the distribution from reaching the protected hazard shall comply with this section.

8.10.7.3.2 Sprinklers shall be installed under fixed obstructions over 4 ft (1.2 m) wide, such as ducts, stairs, and landings.

8.10.7.3.3 Sprinklers shall not be required under obstructions that are not fixed in place.

8.10.7.3.4 Sprinklers installed under open gratings shall be shielded from the discharge of overhead sprinklers.

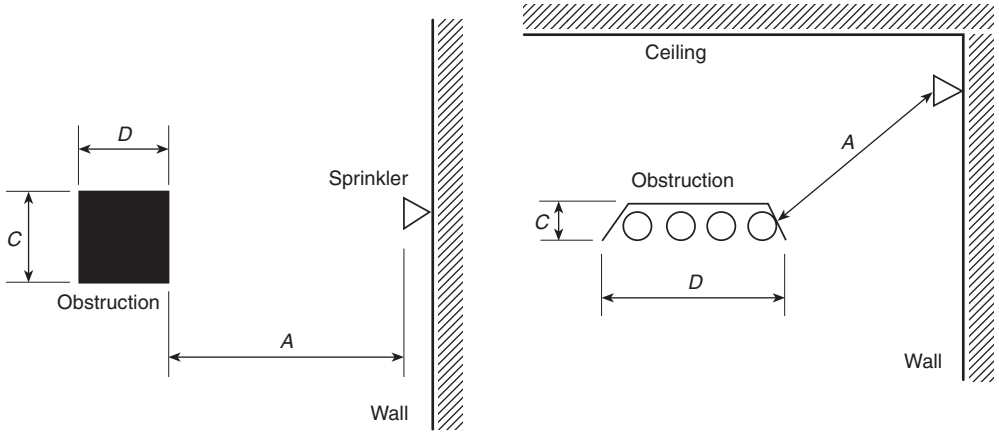

FIGURE 8.10.7.2.1.4 Minimum Distance from Obstruction (Residential Sidewall Sprinklers).

Copyright 2014 National Fire Protection Association (NFPA). Licensed, by agreement, for individual use and download on October 4, 2014 to LEADER and READER for designated user PATTARAPORN SRITRAKOOL. No other reproduction or transmission in any form permitted without written permission of NFPA. For inquires or to report unauthorized use, contact licensing@nfpa.org.

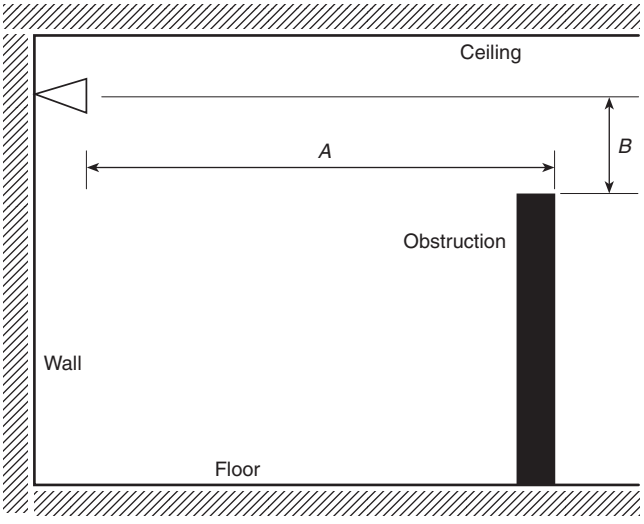

FIGURE 8.10.7.2.2 Suspended or Floor-Mounted Obstruction (Residential Sidewall Sprinklers) in Light Hazard Occupancy Only.

8.10.8 Ceiling Pockets.

8.10.8.1 Sprinklers shall be required in all ceiling pockets.

8.10.8.2 The requirement of 8.10.8.1 shall not apply where all of the following requirements are met:

(1) The total volume of the unprotected ceiling pocket does not exceed 100 ft^3 (2.83 m^3).
(2) The depth of the unprotected ceiling pocket does not exceed 12 in. (305 mm).
(3) The entire floor of the unprotected ceiling pocket is protected by the sprinklers at the lower ceiling elevation.
(4) The interior finish of the unprotected ceiling pocket is noncombustible or limited-combustible construction.

8.11 CMSA Sprinklers.

8.11.1 General. All requirements of Section 8.5 shall apply to CMSA sprinklers except as modified in Section 8.11.

8.11.1.1 CMSA pendent sprinklers shall be installed in accordance with Section 8.5 and the manufacturer's installation instructions in lieu of the requirements in Section 8.11.

8.11.2* Protection Areas per Sprinkler (CMSA Sprinklers).

8.11.2.1 Determination of Protection Area of Coverage. The protection area of coverage per sprinkler (A_s) shall be determined in accordance with 8.5.2.1.

8.11.2.2 Maximum Protection Area of Coverage.

8.11.2.2.1 The maximum allowable protection area of coverage for a sprinkler (A_s) shall be in accordance with the value indicated in Table 8.11.2.2.1.

8.11.2.2.2 In any case, the maximum area of coverage of any sprinkler shall not exceed 130 ft^2 (12.9 m^2).

8.11.2.3 Minimum Protection Area of Coverage. The minimum allowable protection area of coverage for a sprinkler (A_s) shall be not less than 80 ft^2 (7.4 m^2).

Table 8.11.2.2.1 Protection Areas and Maximum Spacing for CMSA Sprinklers

	Protection Area		Maximum Spacing	
Construction Type	**ft^2**	**m^2**	**ft**	**m**
Noncombustible unobstructed	130	12.1	12	3.7
Noncombustible obstructed	130	12.1	12	3.7
Combustible unobstructed	130	12.1	12	3.7
Combustible obstructed	100	9.3	10	3.1
Rack storage combustible obstructed	100	9.3	10	3.1
Rack storage unobstructed and noncombustible obstructed	100	9.3	12	3.7

8.11.3 Sprinkler Spacing (CMSA Sprinklers).

8.11.3.1* Maximum Distance Between Sprinklers.

8.11.3.1.1 Under unobstructed and obstructed noncombustible construction and unobstructed combustible construction, the distance between sprinklers shall be limited to not more than 12 ft (3.7 m) between sprinklers, as shown in Table 8.11.2.2.1.

8.11.3.1.2 Under obstructed combustible construction, the maximum distance shall be limited to 10 ft (3 m).

8.11.3.2 Maximum Distance from Walls. The distance from sprinklers to walls shall not exceed one-half of the allowable distance permitted between sprinklers as indicated in Table 8.11.2.2.1.

8.11.3.3 Minimum Distance from Walls. Sprinklers shall be located a minimum of 4 in. (102 mm) from a wall.

8.11.3.4 Minimum Distance Between Sprinklers. Sprinklers shall be spaced not less than 8 ft (2.4 m) on center.

8.11.4 Deflector Position (CMSA Sprinklers).

8.11.4.1* Distance Below Ceilings.

8.11.4.1.1 Unobstructed Construction. Under unobstructed construction, the distance between the sprinkler deflector and the ceiling shall be a minimum of 6 in. (152 mm) and a maximum of 8 in. (203 mm).

8.11.4.1.2 Obstructed Construction. Under obstructed construction, the sprinkler deflector shall be located in accordance with one of the following arrangements:

(1) Installed with the deflectors located a minimum of 6 in. (152 mm) and a maximum of 12 in. (305 mm) from the ceiling.
(2) Installed with the deflectors within the horizontal planes 1 in. to 6 in. (25.4 mm to 152 mm) below wood joist, composite wood joist, solid obstructed noncombustible, or solid obstructed limited combustible construction, to a maximum distance of 22 in. (559 mm) below the ceiling/

Copyright 2014 National Fire Protection Association (NFPA). Licensed, by agreement, for individual use and download on October 4, 2014 to LEADER and READER for designated user PATTARAPORN SRITRAKOOL. No other reproduction or transmission in any form permitted without written permission of NFPA. For inquires or to report unauthorized use, contact licensing@nfpa.org.

roof or deck. Where CMSA sprinklers are installed under open wood joist construction, their minimum operating pressure shall be 50 psi (3.4 bar) for a K-11.2 (160) sprinkler or 22 psi (1.5 bar) for a K-16.8 (240) sprinkler in accordance with 16.2.2.4, 16.3.2.4, and 17.2.2.3.

(3) Installed with deflectors of sprinklers under concrete tee construction with stems spaced less than 7 ft 6 in. (2.3 m) but more than 3 ft (0.9 m) on centers, regardless of the depth of the tee, located at or above a horizontal plane 1 in. (25.4 mm) below the bottom of the stems of the tees and in compliance with Table 8.11.5.1.2.

8.11.4.2 Deflector Orientation. Deflectors of sprinklers shall be aligned parallel to ceilings or roofs.

8.11.5* Obstructions to Sprinkler Discharge (CMSA Sprinklers).

8.11.5.1 Performance Objective.

8.11.5.1.1 Sprinklers shall be located so as to minimize obstructions to discharge as defined in 8.5.5.2 and 8.5.5.3, or additional sprinklers shall be provided to ensure adequate coverage of the hazard.

8.11.5.1.2 Sprinklers shall be arranged to comply with 8.5.5.2, Table 8.11.5.1.2, and Figure 8.11.5.1.2.

Table 8.11.5.1.2 Positioning of Sprinklers to Avoid Obstructions to Discharge (CMSA Sprinklers)

Distance from Sprinkler to Side of Obstruction *(A)*	Maximum Allowable Distance of Deflector Above Bottom of Obstruction *(B)* (in.)
Less than 1 ft	0
1 ft to less than 1 ft 6 in.	1½
1 ft 6 in. to less than 2 ft	3
2 ft to less than 2 ft 6 in.	5½
2 ft 6 in. to less than 3 ft	8
3 ft to less than 3 ft 6 in.	10
3 ft 6 in. to less than 4 ft	12
4 ft to less than 4 ft 6 in.	15
4 ft 6 in. to less than 5 ft	18
5 ft to less than 5 ft 6 in.	22
5 ft 6 in. to less than 6 ft	26
6 ft	31

For SI units, 1 in. = 25.4 mm; 1 ft = 0.3048 m.
Note: For *A* and *B*, refer to Figure 8.11.5.1.2.

8.11.5.1.3 The requirements of 8.11.5.1.2 shall not apply where sprinklers are positioned on opposite sides of the obstruction.

8.11.5.2 Obstructions to Sprinkler Discharge Pattern Development.

8.11.5.2.1 General.

8.11.5.2.1.1 Continuous or noncontinuous obstructions less than or equal to 36 in. (914 mm) below the sprinkler deflector that prevent the pattern from fully developing shall comply with 8.11.5.2.

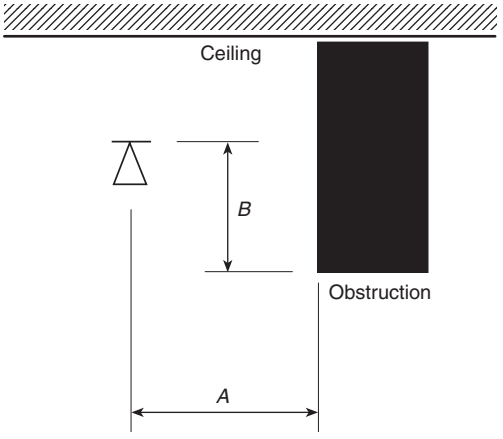

FIGURE 8.11.5.1.2 Positioning of Sprinkler to Avoid Obstruction to Discharge (CMSA Sprinklers).

8.11.5.2.1.2 Regardless of the rules of this section, solid continuous obstructions shall meet the requirements of 8.11.5.1.2 or 8.11.5.1.3.

8.11.5.2.1.3* Unless the requirements of 8.11.5.1.2 or 8.11.5.1.3 are met, for obstructions 8 in. (203 mm) or less in width, as shown in Figure 8.11.5.2.1.3, sprinklers shall be positioned such that they are located at least a distance three times greater than the maximum dimension of the obstruction from the sprinkler (e.g., webs and chord members, pipe, columns, and fixtures).

8.11.5.2.2 Branch Lines. Upright sprinklers shall be positioned with respect to branch lines in accordance with one of the following:

(1) Upright sprinklers shall be permitted to be attached directly to branch lines less than or equal to 4 in. (100 mm) nominal in diameter.
(2) Upright sprinklers shall be permitted to be offset horizontally a minimum of 12 in. (305 mm) from the pipe.
(3) Upright sprinklers shall be permitted to be supplied by a riser nipple (sprig) to elevate the sprinkler deflector a minimum of 12 in. (305 mm) from the centerline of any pipe over 4 in. (100 mm) nominal in diameter.

8.11.5.3* Obstructions that Prevent Sprinkler Discharge from Reaching Hazard.

8.11.5.3.1 Continuous or noncontinuous obstructions that interrupt the water discharge in a horizontal plane below the sprinkler deflector in a manner to limit the distribution from reaching the protected hazard shall comply with 8.11.5.3.

8.11.5.3.2 Sprinklers shall be positioned with respect to fluorescent lighting fixtures, ducts, and obstructions more than 24 in. (610 mm) wide and located entirely below the sprinklers so that the minimum horizontal distance from the near side of the obstruction to the center of the sprinkler is not less than the value specified in Table 8.11.5.3.2 and Figure 8.11.5.3.2.

8.11.5.3.3 Sprinklers installed under open gratings shall be shielded from the discharge of overhead sprinklers.

8.11.5.3.4 Where the bottom of the obstruction is located 24 in. (610 mm) or more below the sprinkler deflectors, the following shall occur:

Copyright 2014 National Fire Protection Association (NFPA). Licensed, by agreement, for individual use and download on October 4, 2014 to LEADER and READER for designated user PATTARAPORN SRITRAKOOL. No other reproduction or transmission in any form permitted without written permission of NFPA. For inquires or to report unauthorized use, contact licensing@nfpa.org.

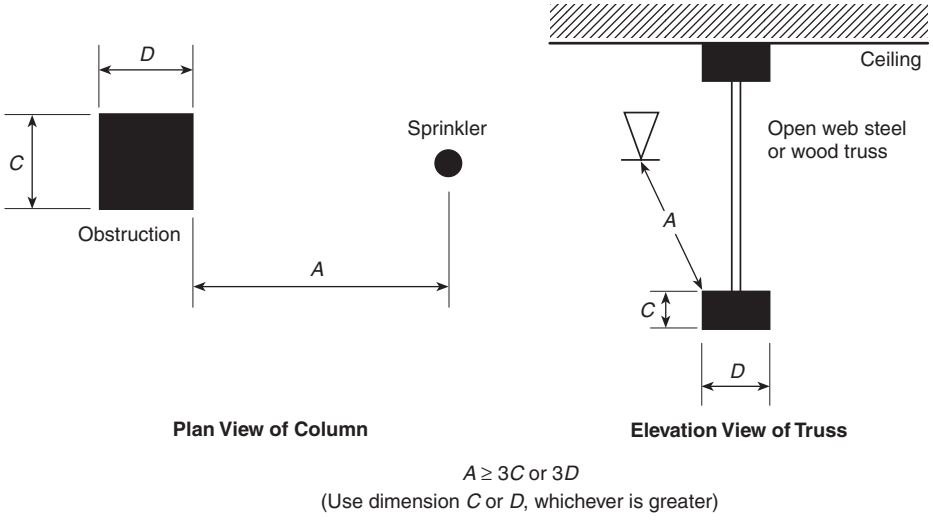

FIGURE 8.11.5.2.1.3 Minimum Distance from Obstruction (CMSA Sprinklers).

Table 8.11.5.3.2 Obstruction Entirely Below Sprinkler (CMSA Sprinklers)

Minimum Distance to Side of Obstruction (ft) *(A)*	Distance of Deflector Above Bottom of Obstruction *(B)* (in.)
Less than 6 in.	1½
6 in. to less than 12 in.	3
12 in. to less than 18 in.	4
18 in. to less than 24 in.	5
24 in. to less than 30 in.	5½
30 in. to less than 36 in.	6

For SI units, 1 in. = 25.4 mm; 1 ft = 0.3048 m.
Note: For *A* and *B*, refer to Figure 8.11.5.3.2.

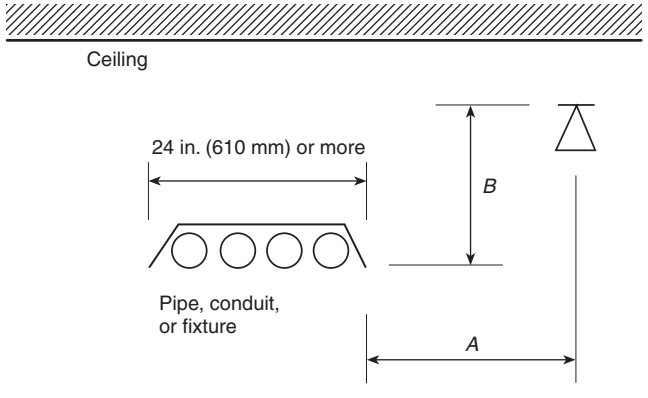

FIGURE 8.11.5.3.2 Obstruction Entirely Below Sprinkler (CMSA Sprinklers).

(1) Sprinklers shall be positioned so that the obstruction is centered between adjacent sprinklers in accordance with Figure 8.11.5.3.4.

(2) The obstruction width shall meet the following requirements:
   (a) The obstruction shall be limited to a maximum width of 24 in. (610 mm) in accordance with Figure 8.11.5.3.4.
   (b) Where the obstruction is greater than 24 in. (610 mm) wide, one or more lines of sprinklers shall be installed below the obstruction.

(3) The obstruction extension shall meet the following requirements:
   (a) The obstruction shall not extend more than 12 in. (305 mm) to either side of the midpoint between sprinklers in accordance with Figure 8.11.5.3.4.
   (b) Where the extensions of the obstruction exceed 12 in. (305 mm), one or more lines of sprinklers shall be installed below the obstruction.

(4) At least 18 in. (457 mm) clearance shall be maintained between the top of storage and the bottom of the obstruction in accordance with Figure 8.11.5.3.4.

8.11.5.3.5 In the special case of an obstruction running parallel to or directly below a branch line, the following shall occur:

(1) The sprinkler shall be located at least 36 in. (914 mm) above the top of the obstruction in accordance with Figure 8.11.5.3.5.
(2) The obstruction shall be limited to a maximum width of 12 in. (305 mm) in accordance with Figure 8.11.5.3.5.
(3) The obstruction shall be limited to a maximum extension of 6 in. (152 mm) to either side of the centerline of the branch line in accordance with Figure 8.11.5.3.5.

8.11.6 Clearance to Storage (CMSA Sprinklers). The clearance between the deflector and the top of storage shall be 36 in. (914 mm) or greater.

8.12 Early Suppression Fast-Response Sprinklers.

8.12.1 General. All requirements of Section 8.5 shall apply except as modified in Section 8.12.

Copyright 2014 National Fire Protection Association (NFPA). Licensed, by agreement, for individual use and download on October 4, 2014 to LEADER and READER for designated user PATTARAPORN SRITRAKOOL. No other reproduction or transmission in any form permitted without written permission of NFPA. For inquires or to report unauthorized use, contact licensing@nfpa.org.

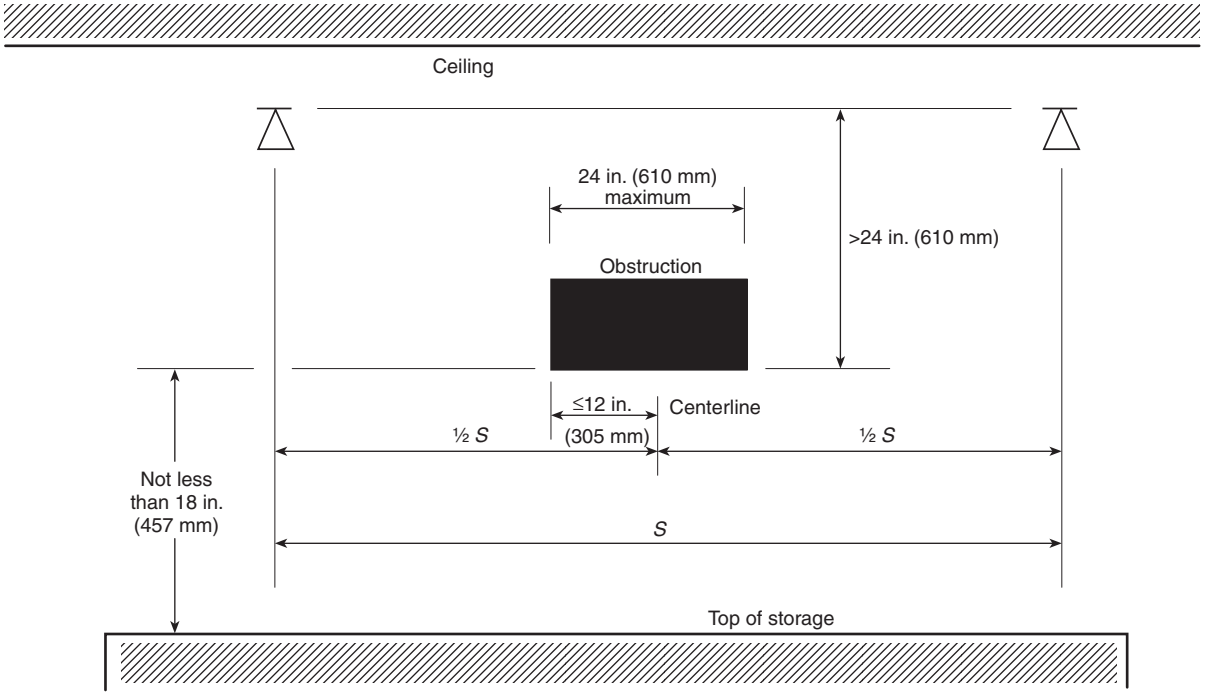

FIGURE 8.11.5.3.4 Obstruction More Than 24 in. (610 mm) Below Sprinklers (CMSA Sprinklers).

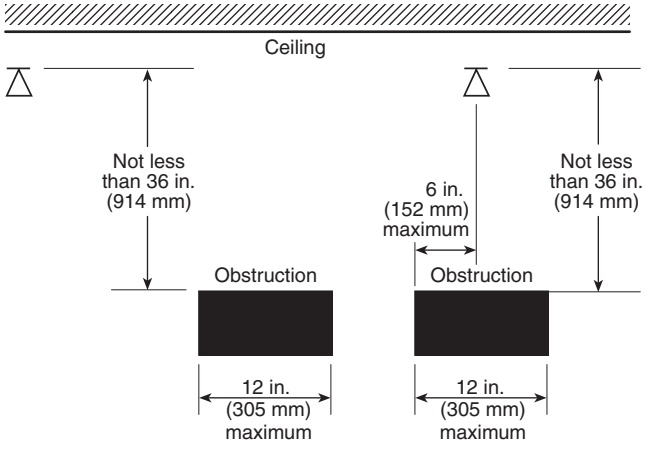

FIGURE 8.11.5.3.5 Obstruction More Than 36 in. (914 mm) Below Sprinklers (CMSA Sprinklers).

8.12.2 Protection Areas per Sprinkler (Early Suppression Fast-Response Sprinklers).

8.12.2.1 Determination of Protection Area of Coverage. The protection area of coverage per sprinkler *(A_s)* shall be determined in accordance with 8.5.2.1.

8.12.2.2 Maximum Protection Area of Coverage.

8.12.2.2.1 The maximum allowable protection area of coverage for a sprinkler *(A_s)* shall be in accordance with the value indicated in Table 8.12.2.2.1.

8.12.2.2.2 Unless the requirements of 8.12.2.2.3 are met, the maximum area of coverage of any sprinkler shall not exceed 100 ft^2 (9.3 m^2).

8.12.2.2.3* Deviations from the maximum sprinkler spacing shall be permitted to eliminate obstructions created by structural elements (such as trusses, bar joists, and wind bracing) by moving a sprinkler along the branch line a maximum of 1 ft (0.31 m) from its allowable spacing, provided coverage for that sprinkler does not exceed 110 ft^2 (10.2 m^2) per sprinkler where all of the following conditions are met:

(1) The average actual floor area protected by the moved sprinkler and the adjacent sprinklers shall not exceed 100 ft^2 (9.3 m^2).
(2) Adjacent branch lines shall maintain the same pattern.
(3) In no case shall the distance between sprinklers exceed 12 ft (3.7 m).

8.12.2.2.4 Deviations from the maximum sprinkler spacing shall be permitted to eliminate obstructions created by structural elements (such as trusses, bar joists, and wind bracing) by moving a single branch line a maximum of 1 ft (0.31 m) from its allowable spacing, provided coverage for the sprinklers on that branch line and the sprinklers on the branch line it is moving away from does not exceed 110 ft^2 (10.2 m^2) per sprinkler where all of the following conditions are met:

(1) The average actual floor area protected by the sprinklers on the moved branch line and the sprinklers on the adjacent branch lines shall not exceed 100 ft^2 (9.3 m^2) per sprinkler.
(2) In no case shall the distance between sprinklers exceed 12 ft (3.7 m).
(3) It shall not be permitted to move a branch line where there are moved sprinklers on a branch line that exceed the maximum sprinkler spacing.

8.12.2.3 Minimum Protection Area of Coverage. The minimum allowable protection area of coverage for a sprinkler *(A_s)* shall not be less than 64 ft^2 (6 m^2).

Copyright 2014 National Fire Protection Association (NFPA). Licensed, by agreement, for individual use and download on October 4, 2014 to LEADER and READER for designated user PATTARAPORN SRITRAKOOL. No other reproduction or transmission in any form permitted without written permission of NFPA. For inquires or to report unauthorized use, contact licensing@nfpa.org.

Table 8.12.2.2.1 Protection Areas and Maximum Spacing of ESFR Sprinklers

	Ceiling/Roof Heights Up to 30 ft (9.1 m)				Ceiling/Roof Heights Over 30 ft (9.1 m)			
	Protection Area		Spacing		Protection Area		Spacing	
Construction Type	ft^2	m^2	ft	m	ft^2	m^2	ft	m
Noncombustible unobstructed	100	9.3	12	3.7	100	9.3	10	3.1
Noncombustible obstructed	100	9.3	12	3.7	100	9.3	10	3.1
Combustible unobstructed	100	9.3	12	3.7	100	9.3	10	3.1
Combustible obstructed	N/A		N/A		N/A		N/A	

8.12.3 Sprinkler Spacing (Early Suppression Fast-Response Sprinklers).

8.12.3.1 Maximum Distance Between Sprinklers. The maximum distance between sprinklers shall be in accordance with the following:

(1) Where the storage height is less than or equal to 25 ft (7.6 m) and the ceiling height is less than or equal to 30 ft (9.1 m), the distance between sprinklers shall be limited to not more than 12 ft (3.7 m) between sprinklers as shown in Table 8.12.2.2.1.

(2) Unless the requirements of 8.12.3.1(3) or 8.12.3.1(4) are met, where the storage height exceeds 25 ft (7.6 m) and ceiling height exceeds 30 ft (9.1 m), the distance between sprinklers shall be limited to not more than 10 ft (3 m) between sprinklers.

(3)*Regardless of the storage or ceiling height arrangement, deviations from the maximum sprinkler spacing shall be permitted to eliminate obstructions created by structural elements (such as trusses, bar joists, and wind bracing) by moving a sprinkler along the branch line a maximum of 1 ft (0.31 m) from its allowable spacing, provided coverage for that sprinkler does not exceed 110 ft^2 (10.2 m^2) where all of the following conditions are met:

(a) The average actual floor area protected by the moved sprinkler and the adjacent sprinklers shall not exceed 100 ft^2 (9.3 m^2).

(b) Adjacent branch lines shall maintain the same pattern.

(c) In no case shall the distance between sprinklers exceed 12 ft (3.7 m).

(4) Where branch lines are parallel to trusses and bar joists, deviations from the maximum sprinkler spacing shall be permitted to eliminate obstructions created by structural elements (such as trusses, bar joists, and wind bracing) by moving a single branch line a maximum of 1 ft (0.31 m) from its allowable spacing, provided coverage for the sprinklers on that branch line and the sprinklers on the branch line it is moving away from does not exceed 110 ft^2 (10.2 m^2) per sprinkler where all of the following conditions are met:

(a) The average actual floor area protected by the sprinklers on the moved branch line and the sprinklers on the adjacent branch lines shall not exceed 100 ft^2 (9.3 m^2) per sprinkler.

(b) In no case shall the distance between sprinklers exceed 12 ft (3.7 m).

(c) It shall not be permitted to move a branch line where there are moved sprinklers on a branch line that exceed the maximum sprinkler spacing.

8.12.3.2 Maximum Distance from Walls. The distance from sprinklers to walls shall not exceed one-half of the allowable distance permitted between sprinklers as indicated in Table 8.12.2.2.1.

8.12.3.3 Minimum Distance from Walls. Sprinklers shall be located a minimum of 4 in. (102 mm) from a wall.

8.12.3.4 Minimum Distance Between Sprinklers. Sprinklers shall be spaced not less than 8 ft (2.4 m) on center.

8.12.4 Deflector Position (Early Suppression Fast-Response Sprinklers).

8.12.4.1 Distance Below Ceilings.

8.12.4.1.1 Pendent sprinklers with a nominal K-factor of K-14 (200) shall be positioned so that deflectors are a maximum 14 in. (356 mm) and a minimum 6 in. (152 mm) below the ceiling.

8.12.4.1.2 Pendent sprinklers with a nominal K-factor of K-16.8 (240) shall be positioned so that deflectors are a maximum 14 in. (356 mm) and a minimum 6 in. (152 mm) below the ceiling.

8.12.4.1.3 Pendent sprinklers with a nominal K-factor of K-22.4 (320) and K-25.2 (360) shall be positioned so that deflectors are a maximum 18 in. (457 mm) and a minimum 6 in. (152 mm) below the ceiling.

8.12.4.1.4 Upright sprinklers with a nominal K-factor of K-14 (200) shall be positioned so that the deflector is 3 in. to 12 in. (76 mm to 305 mm) below the ceiling.

8.12.4.1.5 Upright sprinklers with a nominal K-factor of K-16.8 (240) shall be positioned so that the deflector is 3 in. to 12 in. (76 mm to 305 mm) below the ceiling.

8.12.4.1.6 With obstructed construction, the branch lines shall be permitted to be installed across the beams, but sprinklers shall be located in the bays and not under the beams.

8.12.4.2 Deflector Orientation. Deflectors of sprinklers shall be aligned parallel to ceilings or roofs.

8.12.5 Obstructions to Sprinkler Discharge (Early Suppression Fast-Response Sprinklers).

8.12.5.1 Obstructions at or Near Ceiling.

8.12.5.1.1 Sprinklers shall be arranged to comply with Table 8.12.5.1.1 and Figure 8.12.5.1.1 for obstructions at the ceiling, such as beams, ducts, lights, and top chords of trusses and bar joists.

8.12.5.1.2 The requirements of 8.12.5.1.1 shall not apply where sprinklers are spaced on opposite sides of obstructions

Copyright 2014 National Fire Protection Association (NFPA). Licensed, by agreement, for individual use and download on October 4, 2014 to LEADER and READER for designated user PATTARAPORN SRITRAKOOL. No other reproduction or transmission in any form permitted without written permission of NFPA. For inquires or to report unauthorized use, contact licensing@nfpa.org.

Table 8.12.5.1.1 Positioning of Sprinklers to Avoid Obstructions to Discharge (ESFR Sprinklers)

Distance from Sprinkler to Side of Obstruction *(A)*	Maximum Allowable Distance of Deflector Above Bottom of Obstruction *(B)* (in.)
Less than 1 ft	0
1 ft to less than 1 ft 6 in.	1½
1 ft 6 in. to less than 2 ft	3
2 ft to less than 2 ft 6 in.	5½
2 ft 6 in. to less than 3 ft	8
3 ft to less than 3 ft 6 in.	10
3 ft 6 in. to less than 4 ft	12
4 ft to less than 4 ft 6 in.	15
4 ft 6 in. to less than 5 ft	18
5 ft to less than 5 ft 6 in.	22
5 ft 6 in. to less than 6 ft	26
6 ft	31

For SI units, 1 in. = 25.4 mm; 1 ft = 0.3048 m.
Note: For *A* and *B*, refer to Figure 8.12.5.1.1.

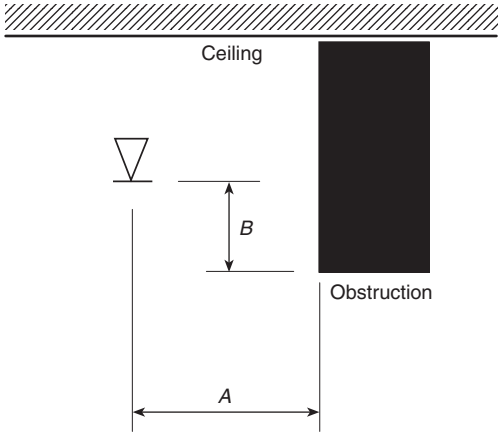

FIGURE 8.12.5.1.1 Positioning of Sprinkler to Avoid Obstruction to Discharge (ESFR Sprinklers).

less than 24 in. (610 mm) wide, provided the distance from the centerline on the obstructions to the sprinklers does not exceed one-half the allowable distance between sprinklers.

8.12.5.1.3 Sprinklers with a special obstruction allowance shall be installed according to their listing.

8.12.5.2* Isolated Obstructions Below Elevation of Sprinklers. Sprinklers shall be arranged with respect to obstructions in accordance with one of the following:

(1) Sprinklers shall be installed below isolated noncontinuous obstructions that restrict only one sprinkler and are located below the elevation of sprinklers such as light fixtures and unit heaters.
(2) Additional sprinklers shall not be required where the obstruction is 2 ft (0.6 m) or less in width and the sprinkler is located horizontally 1 ft (0.3 m) or greater from the nearest edge of the obstruction.
(3) Additional sprinklers shall not be required where sprinklers are positioned with respect to the bottom of obstructions in accordance with 8.12.5.1.
(4) Additional sprinklers shall not be required where the obstruction is 2 in. (51 mm) or less in width and is located a minimum of 2 ft (0.6 m) below the elevation of the sprinkler deflector or is positioned a minimum of 1 ft (0.3 m) horizontally from the sprinkler.
(5) Sprinklers with a special obstruction allowance shall be installed according to their listing.

8.12.5.3 Continuous Obstructions Below Sprinklers.

8.12.5.3.1 General Continuous Obstructions. Sprinklers shall be arranged with respect to obstructions in accordance with one of the following:

(1) Sprinklers shall be installed below continuous obstructions, or they shall be arranged to comply with Table 8.12.5.1.1 for horizontal obstructions entirely below the elevation of sprinklers that restrict sprinkler discharge pattern for two or more adjacent sprinklers such as ducts, lights, pipes, and conveyors.
(2) Additional sprinklers shall not be required where the obstruction is 2 in. (51 mm) or less in width and is located a minimum of 2 ft (0.6 m) below the elevation of the sprinkler deflector or is positioned a minimum of 1 ft (0.3 m) horizontally from the sprinkler.
(3) Additional sprinklers shall not be required where the obstruction is 1 ft (0.3 m) or less in width and located a minimum of 1 ft (0.3 m) horizontally from the sprinkler.
(4) Additional sprinklers shall not be required where the obstruction is 2 ft (0.6 m) or less in width and located a minimum of 2 ft (0.6 m) horizontally from the sprinkler.
(5) Ceiling sprinklers shall not be required to comply with Table 8.12.5.1.1 where a row of sprinklers is installed under the obstruction.

8.12.5.3.2 Bottom Chords of Bar Joists or Open Trusses. ESFR sprinklers shall be positioned a minimum of 1 ft (0.3 m) horizontally from the nearest edge to any bottom chord of a bar joist or open truss.

8.12.5.3.2.1 The requirements of 8.12.5.3.2 shall not apply where upright sprinklers are located over the bottom chords of bar joists or open trusses that are 4 in. (102 mm) maximum in width.

8.12.5.3.3 Open Gratings. Sprinklers installed under open gratings shall be of the intermediate level/rack storage type or otherwise shielded from the discharge of overhead sprinklers.

8.12.5.3.4 Overhead Doors. Quick-response spray sprinklers shall be permitted to be utilized under overhead doors.

8.12.5.3.5 Special Obstruction Allowance. Sprinklers with a special obstruction allowance shall be installed according to their listing.

8.12.6 Clearance to Storage (Early Suppression Fast-Response Sprinklers). The clearance between the deflector and the top of storage shall be 36 in. (914 mm) or greater.

8.13 In-Rack Sprinklers.

8.13.1 System Size. The area protected by a single system of sprinklers in racks shall not exceed 40,000 ft^2 (3716 m^2) of floor area occupied by the racks, including aisles, regardless of the number of levels of in-rack sprinklers.

Copyright 2014 National Fire Protection Association (NFPA). Licensed, by agreement, for individual use and download on October 4, 2014 to LEADER and READER for designated user PATTARAPORN SRITRAKOOL. No other reproduction or transmission in any form permitted without written permission of NFPA. For inquires or to report unauthorized use, contact licensing@nfpa.org.

8.13.2 Type of In-Rack Sprinklers.

8.13.2.1 Sprinklers in racks shall be ordinary-temperature standard-response or quick-response classification with a nominal K-factor of K-5.6 (80), K-8.0 (115), or K-11.2 (160), pendent or upright.

8.13.2.2 Sprinklers with intermediate- and high-temperature ratings shall be used near heat sources as required by 8.3.2.

8.13.3 In-Rack Sprinkler Water Shields.

8.13.3.1 In-Rack Sprinkler Water Shields for Storage of Class I Through Class IV Commodities. Water shields shall be provided directly above in-rack sprinklers, or listed intermediate level/rack storage sprinklers shall be used where there is more than one level, if not shielded by horizontal barriers. *(See Section C.3.)*

8.13.3.2 In-Rack Sprinkler Water Shields for Plastic Storage. Where in-rack sprinklers are not shielded by horizontal barriers, water shields shall be provided above the sprinklers, or listed intermediate level/rack storage sprinklers shall be used.

8.13.4 Location, Position, and Spacing of In-Rack Sprinklers. The location, position, and spacing of in-rack sprinklers shall comply with the requirements in Chapters 12 through 20 as applicable.

8.13.4.1 Minimum Distance Between In-Rack Sprinklers. In-rack sprinklers shall be permitted to be placed less than 6 ft (1.8 m) on center.

8.13.5 Obstructions to In-Rack Sprinkler Discharge. In-rack sprinklers shall not be required to meet the obstruction criteria and clearance from storage requirements of Section 8.5.

8.14 Pilot Line Detectors.

8.14.1 Pilot line detectors and related components including pipe and fittings shall be corrosion resistant when installed in areas exposed to weather or corrosive conditions.

8.14.2 Where subject to mechanical or physical damage, pilot line detectors and related detection system components shall be protected.

8.14.3 Where spray sprinklers are used as pilot line detectors, they shall be installed in accordance with Section 8.14 and the spacing and location rules of Section 8.6, except that the obstruction to water distribution rules for automatic sprinklers shall not be required to be followed.

8.14.3.1 Where located under a ceiling, pilot sprinklers shall be positioned in accordance with the requirements of Section 8.6.

8.14.4 The temperature rating of spray sprinklers utilized as pilot line detectors shall be selected in accordance with 8.3.2.

8.14.5 Maximum horizontal spacing for indoor locations shall not exceed 12 ft (3.7 m).

8.14.6 Pilot line detectors shall be permitted to be spaced more than 22 in. (559 mm) below a ceiling or deck where the maximum spacing between pilot line detectors is 10 ft (3 m) or less.

8.14.6.1 Other maximum horizontal spacing differing from those required in 8.14.5 shall be permitted where installed in accordance with their listing.

8.14.7 Pilot line detectors located outdoors, such as in open process structures, shall be spaced such that the elevation of a single level of pilot line detectors and between additional levels of pilot line detectors shall not exceed 17 ft (5.2 m).

8.14.8 The maximum distance between pilot line detectors installed outdoors shall not exceed 8 ft (2.5 m).

8.14.8.1 The horizontal distance between pilot line detectors installed outdoors on a given level shall be permitted to be increased to 10 ft (3 m) when all of the following conditions are met:

(1) The elevation of the first level does not exceed 15 ft (4.6 m).
(2) The distance between additional levels does not exceed 12 ft (3.7 m).
(3) The pilot line actuators are staggered vertically.

8.14.8.2 Alternate vertical spacing of pilot line detectors differing from those required in 8.14.8.1 shall be permitted where installed in accordance with their listing.

8.14.9 Pilot line detectors located in open-sided buildings shall follow the indoor spacing rules.

8.14.9.1 A row of pilot line detectors spaced in accordance with the outdoor pilot line detector spacing rules shall be located along the open sides of open-sided buildings.

8.14.9.2 Pilot line detectors located under open gratings shall be spaced in accordance with the outdoor rules.

8.14.9.3 Where two or more adjacent water spray systems in one fire area are controlled by separate pilot line detector systems, the detectors on each system shall be spaced independently as if the dividing line between the systems were a wall or draft curtain.

8.14.9.4 Where pilot line detectors are installed in water cooling tower applications, they shall be in accordance with Section 22.21.

8.14.10 Pipe supplying pilot line detectors shall be permitted to be supported from the same points of hanger attachment as the piping system it serves.

8.14.10.1 Pipe supplying pilot line detectors shall not be required to meet the requirements of 9.3.5.

8.15 Special Situations.

8.15.1 Concealed Spaces.

8.15.1.1 Concealed Spaces Requiring Sprinkler Protection. Concealed spaces of exposed combustible construction shall be protected by sprinklers except in concealed spaces where sprinklers are not required to be installed by 8.15.1.2.1 through 8.15.1.2.18 and 8.15.6.

8.15.1.2* Concealed Spaces Not Requiring Sprinkler Protection.

8.15.1.2.1* Concealed spaces of noncombustible and limited-combustible construction with minimal combustible loading having no access shall not require sprinkler protection.

8.15.1.2.1.1 The space shall be considered a concealed space even with small openings such as those used as return air for a plenum.

8.15.1.2.2 Concealed spaces of noncombustible and limited-combustible construction with limited access and not permitting occupancy or storage of combustibles shall not require sprinkler protection.

Copyright 2014 National Fire Protection Association (NFPA). Licensed, by agreement, for individual use and download on October 4, 2014 to LEADER and READER for designated user PATTARAPORN SRITRAKOOL. No other reproduction or transmission in any form permitted without written permission of NFPA. For inquires or to report unauthorized use, contact licensing@nfpa.org.

8.15.1.2.2.1 The space shall be considered a concealed space even with small openings such as those used as return air for a plenum.

8.15.1.2.3 Concealed spaces formed by studs or joists with less than 6 in. (152 mm) between the inside or near edges of the studs or joists shall not require sprinkler protection. *(See Figure 8.6.4.1.5.1.)*

8.15.1.2.4 Concealed spaces formed by bar joists with less than 6 in. (152 mm) between the roof or floor deck and ceiling shall not require sprinkler protection.

8.15.1.2.5* Concealed spaces formed by ceilings attached directly to or within 6 in. (152 mm) of wood joist or similar solid member construction shall not require sprinkler protection.

8.15.1.2.6* Concealed spaces formed by ceilings attached to composite wood joist construction either directly or onto metal channels not exceeding 1 in. (25.4 mm) in depth, provided the joist channels are firestopped into volumes each not exceeding 160 ft^3 (4.53 m^3) using materials equivalent to the web construction and at least 3½ in. (90 mm) of batt insulation is installed at the bottom of the joist channels when the ceiling is attached utilizing metal channels, shall not require sprinkler protection.

8.15.1.2.7 Concealed spaces filled with noncombustible insulation shall not require sprinkler protection.

8.15.1.2.7.1 A maximum 2 in. (50 mm) air gap at the top of the space shall be permitted.

8.15.1.2.8 Concealed spaces within wood joist construction and composite wood joist construction having noncombustible insulation filling the space from the ceiling up to the bottom edge of the joist of the roof or floor deck, provided that in composite wood joist construction the joist channels are firestopped into volumes each not exceeding 160 ft^3 (4.53 m^3) to the full depth of the joist with material equivalent to the web construction, shall not require sprinkler protection.

8.15.1.2.9 Concealed spaces over isolated small rooms not exceeding 55 ft^2 (5.1 m^2) in area shall not require sprinkler protection.

8.15.1.2.10 Concealed spaces where rigid materials are used and the exposed surfaces have a flame spread index of 25 or less, and the materials have been demonstrated not to propagate fire more than 10.5 ft (3.2 m) when tested in accordance with ASTM E 84, *Standard Test Method of Surface Burning Characteristics of Building Materials*, or ANSI/UL 723, *Standard for Test for Surface Burning Characteristics of Building Materials*, extended for an additional 20 minutes in the form in which they are installed, shall not require sprinkler protection.

8.15.1.2.11* Concealed spaces in which the exposed materials are constructed entirely of fire retardant–treated wood as defined by NFPA 703 shall not require sprinkler protection.

8.15.1.2.12 Noncombustible concealed spaces having exposed combustible insulation where the heat content of the facing and substrate of the insulation material does not exceed 1000 Btu/ft^2 (11,356 kJ/m^2) shall not require sprinkler protection.

8.15.1.2.13 Concealed spaces below insulation that is laid directly on top of or within wood joists or composite wood joists used as ceiling joists in an otherwise sprinklered concealed space, with the ceiling attached directly to the bottom of the joists, shall not require sprinkler protection.

8.15.1.2.14 Vertical pipe chases under 10 ft^2 (0.93 m^2), where provided in multifloor buildings where the chases are firestopped at each floor using materials equivalent to the floor construction, and where such pipe chases shall contain no sources of ignition, piping shall be water-filled or noncombustible and pipe penetrations at each floor shall be properly sealed and shall not require sprinkler protection.

8.15.1.2.15 Exterior columns under 10 ft^2 (0.93 m^2) in area, formed by studs or wood joist supporting exterior canopies that are fully protected with a sprinkler system, shall not require sprinkler protection.

8.15.1.2.16* Concealed spaces formed by noncombustible or limited-combustible ceilings suspended from the bottom of wood joists, composite wood joists, wood bar joists, or wood trusses that have insulation filling all of the gaps between the bottom of the trusses or joists, and where sprinklers are present in the space above the insulation within the trusses or joists, shall not require sprinkler protection.

8.15.1.2.16.1 The heat content of the facing, substrate, and support of the insulation material shall not exceed 1000 Btu/ft^2 (11,356 kJ/m^2).

8.15.1.2.17* Concealed spaces formed by noncombustible or limited-combustible ceilings suspended from the bottom of wood joists and composite wood joists with a maximum nominal chord width of 2 in. (50.8 mm), where joist spaces are full of noncombustible batt insulation with a maximum 2 in. (50.8 m) air space between the roof decking material and the top of the batt insulation shall not require sprinklers.

8.15.1.2.17.1 Facing that meets the requirements for noncombustible or limited-combustible material covering the surface of the bottom chord of each joist and secured in place per the manufacturer's recommendations shall not require sprinklers.

8.15.1.2.18 Soffits, Eaves, Overhangs, and Decorative Frame Elements. Sprinklers shall be permitted to be omitted from within combustible soffits, eaves, overhangs, and decorative frame elements that are constructed in accordance with 8.15.1.2.18.1 through 8.15.1.2.18.4.

8.15.1.2.18.1 Combustible soffits, eaves, overhangs, and decorative frame elements shall not exceed 4 ft 0 in. (1.2 m) in width.

8.15.1.2.18.2 Combustible soffits, eaves, overhangs, and decorative frame elements shall be draftstopped, with a material equivalent to that of the soffit, into volumes not exceeding 160 ft^3 (4.5 m^3).

8.15.1.2.18.3 Combustible soffits, eaves, overhangs, and decorative frame elements shall be separated from the interior of the building by walls or roofs of noncombustible or limited-combustible construction.

8.15.1.2.18.4 Combustible soffits, eaves, overhangs, and decorative frame elements shall have no openings or unprotected penetrations directly into the building.

8.15.1.3 Concealed Space Design Requirements. Sprinklers in concealed spaces having no access for storage or other use shall be installed in accordance with the requirements for light hazard occupancy.

8.15.1.4 Heat-Producing Devices with Composite Wood Joist Construction. Where heat-producing devices such as furnaces or process equipment are located in the joist channels above a ceiling attached directly to the underside of composite wood joist construction that would not otherwise require sprinkler protection of the spaces, the joist channel containing the heat-producing devices shall be sprinklered by installing sprinklers in each joist channel, on each side, adjacent to the heat-producing device.

Copyright 2014 National Fire Protection Association (NFPA). Licensed, by agreement, for individual use and download on October 4, 2014 to LEADER and READER for designated user PATTARAPORN SRITRAKOOL. No other reproduction or transmission in any form permitted without written permission of NFPA. For inquires or to report unauthorized use, contact licensing@nfpa.org.

8.15.1.5 Localized Protection of Exposed Combustible Construction or Exposed Combustibles. When otherwise noncombustible or limited-combustible concealed spaces that would not require sprinkler protection have localized exposed combustible construction, or contain localized areas of exposed combustibles, the combustibles shall be permitted to be protected as follows:

(1) If the exposed combustibles are in the vertical partitions or walls around all or a portion of the enclosure, a single row of sprinklers spaced not over 12 ft (3.7 m) apart nor more than 6 ft (1.8 m) from the inside of the partition shall be permitted to protect the surface. The first and last sprinklers in such a row shall not be over 5 ft (1.5 m) from the ends of the partitions.
(2) If the exposed combustibles are in the horizontal plane, the area of the combustibles shall be permitted to be protected with sprinklers on a light hazard spacing. Additional sprinklers shall be installed no more than 6 ft (1.8 m) outside the outline of the area and not more than 12 ft (3.7 m) on center along the outline. When the outline returns to a wall or other obstruction, the last sprinkler shall not be more than 6 ft (1.8 m) from the wall or obstruction.

8.15.1.6 Sprinklers used in horizontal combustible concealed spaces (with a slope not exceeding 2 in 12) with combustible wood truss, wood joist construction, or bar joist construction having a combustible upper surface and where the depth of the space is less than 36 in. (914 mm) from deck to deck or with double wood joist construction with a maximum of 36 in. (914 mm) between the top of the bottom joist and the bottom of the upper joist shall be listed for such use.

8.15.1.6.1 Sprinklers specifically listed to provide protection of combustible concealed spaces described in 8.15.1.6 shall be permitted to be used in accordance with 8.3.1.2 where the space is less than 12 in. (305 mm) from deck to deck.

8.15.1.7 Sprinklers specifically listed to provide protection of combustible concealed spaces described in 8.15.1.6 shall be permitted to protect composite wood joist construction with a maximum of 36 in. (914 mm) between the top of the bottom joist and the bottom of the upper joist.

8.15.2 Vertical Shafts.

8.15.2.1 General. Unless the requirements of 8.15.2.1.1 or 8.15.2.1.2 are met, one sprinkler shall be installed at the top of shafts.

8.15.2.1.1 Noncombustible or limited-combustible, nonaccessible vertical duct shafts shall not require sprinkler protection.

8.15.2.1.2 Noncombustible or limited-combustible, nonaccessible vertical electrical or mechanical shafts shall not require sprinkler protection.

8.15.2.2* Shafts with Combustible Surfaces.

8.15.2.2.1 Where vertical shafts have combustible surfaces, one sprinkler shall be installed at each alternate floor level.

8.15.2.2.2 Where a shaft having combustible surfaces is trapped, an additional sprinkler shall be installed at the top of each trapped section.

8.15.2.3 Accessible Shafts with Noncombustible Surfaces. Where accessible vertical shafts have noncombustible surfaces, one sprinkler shall be installed near the bottom.

8.15.3 Stairways.

8.15.3.1 Combustible Construction. Sprinklers shall be installed beneath all stairways of combustible construction.

8.15.3.1.1 Sprinklers shall be installed at the top of combustible stair shafts.

8.15.3.1.2* Sprinklers shall be installed under the landings at each floor level.

8.15.3.1.3 Sprinklers shall be installed beneath the lowest intermediate landing.

8.15.3.2 Noncombustible Construction.

8.15.3.2.1 In noncombustible stair shafts having noncombustible stairs with noncombustible or limited-combustible finishes, sprinklers shall be installed at the top of the shaft and under the first accessible landing above the bottom of the shaft.

8.15.3.2.2 Where noncombustible stair shafts are divided by walls or doors, sprinklers shall be provided on each side of the separation.

8.15.3.2.3 Sprinklers shall be installed beneath landings or stairways where the area beneath is used for storage.

8.15.3.2.3.1 Sprinklers shall be permitted to be omitted from the bottom of the stairwell when the space under the stairs at the bottom is blocked off so that storage cannot occur.

8.15.3.2.4 Sprinklers shall be permitted to be omitted from exterior stair towers when the exterior walls of the stair tower are at least 50 percent open and when the stair tower is entirely of noncombustible construction.

8.15.3.3* Stairs Serving Two or More Areas. When stairs have openings to each side of a fire wall(s), sprinklers shall be installed in the stair shaft at each floor landing with multiple openings.

8.15.4* Vertical Openings.

8.15.4.1* General. Unless the requirements of 8.15.4.4 are met, where moving stairways, staircases, or similar floor openings are unenclosed and where sprinkler protection is serving as the alternative to enclosure of the vertical opening, the floor openings involved shall be protected by closely spaced sprinklers in combination with draft stops in accordance with 8.15.4.2 and 8.15.4.3.

8.15.4.2 Draft Stops. Draft stops shall meet all of the following criteria:

(1) The draft stops shall be located immediately adjacent to the opening.
(2) The draft stops shall be at least 18 in. (457 mm) deep.
(3) The draft stops shall be of noncombustible or limited-combustible material that will stay in place before and during sprinkler operation.

8.15.4.3 Sprinklers.

8.15.4.3.1 Sprinklers shall be spaced not more than 6 ft (1.8 m) apart and placed 6 in. to 12 in. (152 mm to 305 mm) from the draft stop on the side away from the opening.

8.15.4.3.2 Where sprinklers are closer than 6 ft (1.8 m), cross baffles shall be provided in accordance with 8.6.3.4.2.

8.15.4.4 Large Openings. Closely spaced sprinklers and draft stops are not required around large openings such as those found in shopping malls, atrium buildings, and similar structures

Copyright 2014 National Fire Protection Association (NFPA). Licensed, by agreement, for individual use and download on October 4, 2014 to LEADER and READER for designated user PATTARAPORN SRITRAKOOL. No other reproduction or transmission in any form permitted without written permission of NFPA. For inquires or to report unauthorized use, contact licensing@nfpa.org.

where all adjoining levels and spaces are protected by automatic sprinklers in accordance with this standard and where the openings have all horizontal dimensions between opposite edges of 20 ft (6 m) or greater and an area of 1000 ft^2 (93 m^2) or greater.

8.15.5 Elevator Hoistways and Machine Rooms.

8.15.5.1* Sidewall spray sprinklers shall be installed at the bottom of each elevator hoistway not more than 2 ft (0.61 m) above the floor of the pit.

8.15.5.2 The sprinkler required at the bottom of the elevator hoistway by 8.15.5.1 shall not be required for enclosed, noncombustible elevator shafts that do not contain combustible hydraulic fluids.

8.15.5.3 Automatic fire sprinklers shall not be required in elevator machine rooms, elevator machinery spaces, control spaces, or hoistways of traction elevators installed in accordance with the applicable provisions in NFPA *101*, or the applicable building code, where all of the following conditions are met:

(1) The elevator machine room, machinery space, control room, control space, or hoistway of traction elevator is dedicated to elevator equipment only.
(2) The elevator machine room, machine room, machinery space, control room, control space, or hoistway of traction elevators are protected by smoke detectors, or other automatic fire detection, installed in accordance with *NFPA 72*.
(3) The elevator machinery space, control room, control space, or hoistway of traction elevators is separated from the remainder of the building by walls and floor/ceiling or roof/ceiling assemblies having a fire resistance rating of not less than that specified by the applicable building code.
(4) No materials unrelated to elevator equipment are permitted to be stored in elevator machine rooms, machinery spaces, control rooms, control spaces, or hoistways of traction elevators.
(5) The elevator machinery is not of the hydraulic type.

8.15.5.4* Automatic sprinklers in elevator machine rooms or at the tops of hoistways shall be of ordinary- or intermediate-temperature rating.

8.15.5.5* Upright, pendent, or sidewall spray sprinklers shall be installed at the top of elevator hoistways.

8.15.5.6 The sprinkler required at the top of the elevator hoistway by 8.15.5.5 shall not be required where the hoistway for passenger elevators is noncombustible or limited-combustible and the car enclosure materials meet the requirements of ASME A17.1, *Safety Code for Elevators and Escalators*.

8.15.5.7 Combustible Suspension in Elevators.

8.15.5.7.1 Sprinklers shall be installed at the top and bottom of elevator hoistways where elevators utilize combustible suspension means such as noncircular elastomeric-coated or polyurethane-coated steel belts.

8.15.5.7.2 The sprinklers in the elevator hoistway shall not be required when the suspension means provide not less than an FT-1 rating when tested to the vertical burn test requirements of UL 62, *Flexible Cords and Cables*, and UL 1581, *Reference Standard for Electrical Wires, Cables, and Flexible Cords*.

8.15.6 Spaces Under Ground Floors, Exterior Docks, and Platforms.

8.15.6.1 Unless the requirements of 8.15.6.2 are met, sprinklers shall be installed in spaces under all combustible ground floors and combustible exterior docks and platforms.

8.15.6.2 Sprinklers shall be permitted to be omitted from spaces under ground floors, exterior docks, and platforms where all of the following conditions exist:

(1) The space is not accessible for storage purposes and is protected against accumulation of wind-borne debris.
(2) The space contains no equipment such as conveyors or fuel-fired heating units.
(3) The floor over the space is of tight construction.
(4) No combustible or flammable liquids or materials that under fire conditions would convert into combustible or flammable liquids are processed, handled, or stored on the floor above the space.

8.15.7* Exterior Projections.

8.15.7.1 Unless the requirements of 8.15.7.2, 8.15.7.3, or 8.15.7.4 are met, sprinklers shall be installed under exterior projections exceeding 4 ft (1.2 m) in width.

8.15.7.2* Sprinklers shall be permitted to be omitted where the exterior projections are constructed with materials that are noncombustible, limited-combustible, or fire retardant–treated wood as defined in NFPA 703.

8.15.7.3 Sprinklers shall be permitted to be omitted from below the exterior projections of combustible construction, provided the exposed finish material on the exterior projections are noncombustible, limited-combustible, or fire retardant–treated wood as defined in NFPA 703, and the exterior projections contain only sprinklered concealed spaces or any of the following unsprinklered combustible concealed spaces:

(1) Combustible concealed spaces filled entirely with noncombustible insulation
(2) Light or ordinary hazard occupancies where noncombustible or limited-combustible ceilings are directly attached to the bottom of solid wood joists so as to create enclosed joist spaces 160 ft^3 (4.5 m^3) or less in volume, including space below insulation that is laid directly on top or within the ceiling joists in an otherwise sprinklered attic *[see 11.2.3.1.4(4)(d)]*
(3) Concealed spaces over isolated small exterior projections not exceeding 55 ft^2 (5.1 m^2) in area

8.15.7.4 Sprinklers shall be permitted to be omitted from exterior exit corridors when the exterior walls of the corridor are at least 50 percent open and when the corridor is entirely of noncombustible construction.

8.15.7.5* Sprinklers shall be installed under exterior projections greater than 2 ft (0.6 m) wide over areas where combustibles are stored.

8.15.8 Dwelling Units.

8.15.8.1 Bathrooms.

8.15.8.1.1* Sprinklers shall not be required in bathrooms that are located within dwelling units of hotels and motels, that do not exceed 55 ft^2 (5.1 m^2) in area, and that have walls and ceilings of noncombustible or limited-combustible materials with a 15-minute thermal barrier rating, including the walls and ceilings behind any shower enclosure or tub.

8.15.8.2* Closets and Pantries. Sprinklers are not required in clothes closets, linen closets, and pantries within dwelling units in hotels and motels where the area of the space does not exceed 24 ft^2 (2.2 m^2), the least dimension does not exceed 3 ft (0.9 m), and the walls and ceilings are surfaced with noncombustible or limited-combustible materials.

Copyright 2014 National Fire Protection Association (NFPA). Licensed, by agreement, for individual use and download on October 4, 2014 to LEADER and READER for designated user PATTARAPORN SRITRAKOOL. No other reproduction or transmission in any form permitted without written permission of NFPA. For inquires or to report unauthorized use, contact licensing@nfpa.org.

8.15.9* Hospital Clothes Closets. Sprinklers shall not be required in clothes closets of patient sleeping rooms in hospitals where the area of the closet does not exceed 6 ft^2 (0.55 m^2), provided the distance from the sprinkler in the patient sleeping room to the back wall of the closet does not exceed the maximum distance permitted by 8.5.3.2.

8.15.10* Library Stack Areas and Record Storage. Where books or records are stored in fixed open book shelves, sprinklers shall be installed in accordance with one of the following:

(1) Sprinklers shall be permitted to be installed without regard to aisles where clearance between sprinkler deflectors and tops of stacks is 18 in. (457 mm) or more.
(2) Where the 18 in. (457 mm) clearance between sprinkler deflectors and tops of stacks cannot be maintained, sprinklers shall be installed in every aisle and at every tier of stacks with distance between sprinklers along aisles not to exceed 12 ft (3.7 m) in accordance with Figure 8.15.10(a).
(3) Where the 18 in. (457 mm) clearance between sprinkler deflectors and tops of stacks cannot be maintained and where vertical shelf dividers are incomplete and allow water distribution to adjacent aisles, sprinklers shall be permitted to be omitted in alternate aisles on each tier, and where ventilation openings are also provided in tier floors, sprinklers shall be staggered vertically in accordance with Figure 8.15.10(b).

8.15.11 Electrical Equipment.

8.15.11.1 Unless the requirements of 8.15.11.3 are met, sprinkler protection shall be required in electrical equipment rooms.

8.15.11.2 Hoods or shields installed to protect important electrical equipment from sprinkler discharge shall be noncombustible.

8.15.11.3 Sprinklers shall not be required in electrical equipment rooms where all of the following conditions are met:

(1) The room is dedicated to electrical equipment only.
(2) Only dry-type electrical equipment is used.
(3) Equipment is installed in a 2-hour fire-rated enclosure including protection for penetrations.
(4) No combustible storage is permitted to be stored in the room.

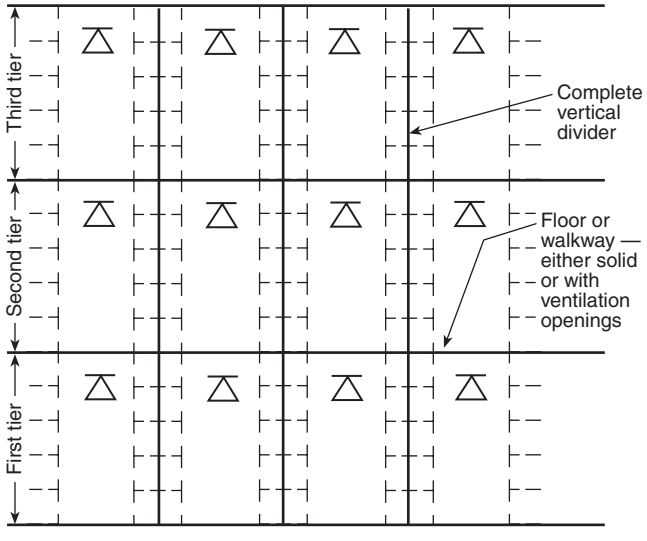

FIGURE 8.15.10(a) Sprinklers in Multitier Bookstacks with Complete Vertical Dividers.

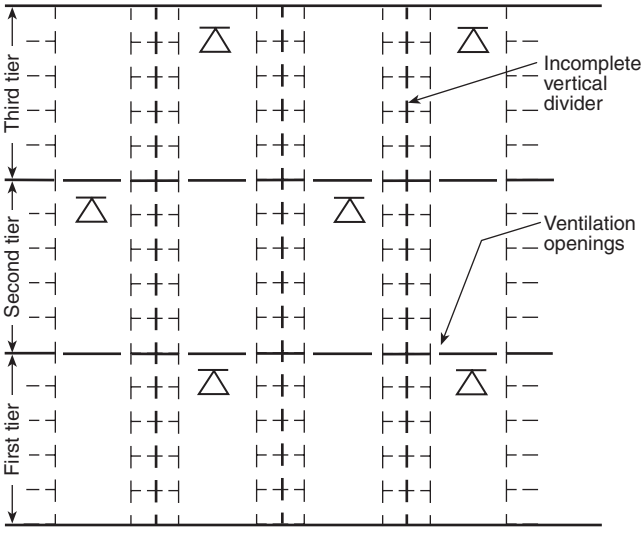

FIGURE 8.15.10(b) Sprinklers in Multitier Bookstacks with Incomplete Vertical Dividers.

8.15.12* Industrial Ovens and Furnaces.

8.15.13 Duct Protection. Duct protection shall be required to meet the requirements of 8.15.12 where required by the authority having jurisdiction or the applicable referenced code or standard.

8.15.13.1 Sprinkler Location.

8.15.13.1.1 Unless the requirements of 8.15.13.1.2 or 8.15.13.1.3 are met, ducts shall have one sprinkler located at the top of each vertical riser and at the midpoint of each offset.

8.15.13.1.2 Sprinklers shall not be required in a vertical riser located outside of a building, provided the riser does not expose combustible material or provided the interior of the building and the horizontal distance between the hood outlet and the vertical riser is at least 25 ft (7.6 m).

8.15.13.1.3 Horizontal exhaust ducts shall have sprinklers located on 10 ft (3 m) centers beginning no more than 5 ft (1.5 m) from the duct entrance.

8.15.13.2 Protection Against Freezing. Sprinklers in exhaust ducts subject to freezing shall be properly protected against freezing. *(See 8.16.4.1.)*

8.15.13.3 Sprinkler Access. Access shall be provided to all sprinklers for inspection, testing, and maintenance.

8.15.13.4 Strainers. A listed line strainer shall be installed in the main water supply preceding sprinklers having nominal K-factors smaller than K-2.8 (40).

8.15.14* Open-Grid Ceilings. Open-grid ceilings shall only be installed beneath sprinklers where one of the following is met:

(1) Open-grid ceilings in which the openings are ¼ in. (6.4 mm) or larger in the least dimension, where the thickness or depth of the material does not exceed the least dimension of the opening, and where such openings constitute 70 percent of the area of the ceiling material.

Copyright 2014 National Fire Protection Association (NFPA). Licensed, by agreement, for individual use and download on October 4, 2014 to LEADER and READER for designated user PATTARAPORN SRITRAKOOL. No other reproduction or transmission in any form permitted without written permission of NFPA. For inquires or to report unauthorized use, contact licensing@nfpa.org.

The spacing of the sprinklers over the open-grid ceiling shall then comply with the following:

(a) In light hazard occupancies where sprinkler spacing (either spray or old-style sprinklers) is less than 10 ft × 10 ft (3 m × 3 m), a minimum clearance of at least 18 in. (457 mm) shall be provided between the sprinkler deflectors and the upper surface of the open-grid ceiling. Where spacing is greater than 10 ft × 10 ft (3 m × 3 m) but less than 10 ft × 12 ft (3 m × 3.7 m), a clearance of at least 24 in. (610 mm) shall be provided from spray sprinklers and at least 36 in. (914 mm) from old-style sprinklers. Where spacing is greater than 10 ft × 12 ft (3 m × 3.7 m), a clearance of at least 48 in. (1219 mm) shall be provided.

(b) In ordinary hazard occupancies, open-grid ceilings shall be permitted to be installed beneath spray sprinklers only. Where sprinkler spacing is less than 10 ft × 10 ft (3 m × 3 m), a minimum clearance of at least 24 in. (610 mm) shall be provided between the sprinkler deflectors and the upper surface of the open-grid ceiling. Where spacing is greater than 10 ft × 10 ft (3 m × 3 m), a clearance of at least 36 in. (914 mm) shall be provided.

(2) Other types of open-grid ceilings shall be permitted to be installed beneath sprinklers where they are listed for such service and are installed in accordance with instructions contained in each package of ceiling material.

8.15.15 Drop-Out Ceilings.

8.15.15.1 Drop-out ceilings shall be permitted to be installed beneath sprinklers where ceilings are listed for that service and are installed in accordance with their listings.

8.15.15.2 Drop-out ceilings shall not be installed below quick-response or extended coverage sprinklers unless specifically listed for that application.

8.15.15.3 Drop-out ceilings shall not be considered ceilings within the context of this standard.

8.15.15.4* Piping installed above drop-out ceilings shall not be considered concealed piping.

8.15.15.5* Sprinklers shall not be installed beneath drop-out ceilings.

8.15.16 Old-Style Sprinklers.

8.15.16.1 Unless required by 8.15.16.2 or 8.15.16.3, old-style sprinklers shall not be used in a new installation.

8.15.16.2* Old-style sprinklers shall be installed in fur storage vaults.

8.15.16.3 Use of old-style sprinklers shall be permitted where construction features or other special situations require unique water distribution.

8.15.17 Stages.

8.15.17.1 Sprinklers shall be installed under the roof at the ceiling, in spaces under the stage either containing combustible materials or constructed of combustible materials, and in all adjacent spaces and dressing rooms, storerooms, and workshops.

8.15.17.2 Where proscenium opening protection is required, a deluge system shall be provided with open sprinklers located not more than 3 ft (0.9 m) away from the stage side of the proscenium arch and spaced up to a maximum of 6 ft (1.8 m) on center. *(See Chapter 11 for design criteria.)*

8.15.18 Stair Towers. Stair towers, or other construction with incomplete floors, if piped on independent risers, shall be treated as one area with reference to pipe sizes.

8.15.19 Return Bends.

8.15.19.1 Unless the requirements of 8.15.19.3, 8.15.19.4, or 8.15.19.5 are met, return bends shall be used where pendent sprinklers are supplied from a raw water source, a mill pond, or open-top reservoirs.

8.15.19.2 Return bends shall be connected to the top of branch lines in order to avoid accumulation of sediment in the drop nipples in accordance with Figure 8.15.19.2.

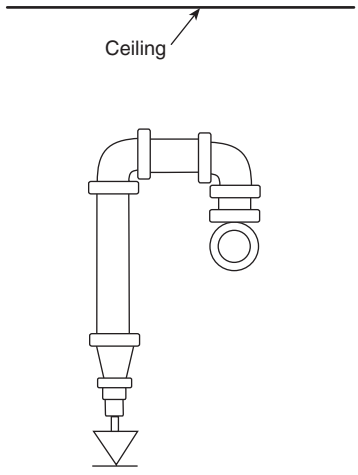

FIGURE 8.15.19.2 Return Bend Arrangement.

8.15.19.3 Return bends shall not be required for deluge systems.

8.15.19.4 Return bends shall not be required where dry pendent sprinklers are used.

8.15.19.5 Return bends shall not be required for wet pipe systems where sprinklers with a nominal K-factor of K-11.2 (160) or larger are used.

8.15.20 Piping to Sprinklers Below Ceilings.

8.15.20.1* In new installations expected to supply sprinklers below a ceiling, minimum 1 in. (25 mm) outlets shall be provided.

8.15.20.2* In new installations, it shall be permitted to provide minimum 1 in. (25 mm) outlets with hexagonal bushings to accommodate sprinklers attached directly to branch line fittings to allow for future system modifications.

8.15.20.3 When systems are revamped to accommodate added ceilings, sprinkler outlets utilized for new armover or drop nipples shall have hexagonal bushings removed.

8.15.20.4 Revamping of Pipe Schedule Systems.

8.15.20.4.1 When pipe schedule systems are revamped, a nipple not exceeding 4 in. (100 mm) in length shall be permitted to be installed in the branch line fitting.

8.15.20.4.2 All piping other than the nipple permitted in 8.15.20.4.1 and 8.15.20.4.3 shall be a minimum of 1 in. (25 mm) in diameter in accordance with Figure 8.15.20.4.2.

Copyright 2014 National Fire Protection Association (NFPA). Licensed, by agreement, for individual use and download on October 4, 2014 to LEADER and READER for designated user PATTARAPORN SRITRAKOOL. No other reproduction or transmission in any form permitted without written permission of NFPA. For inquires or to report unauthorized use, contact licensing@nfpa.org.

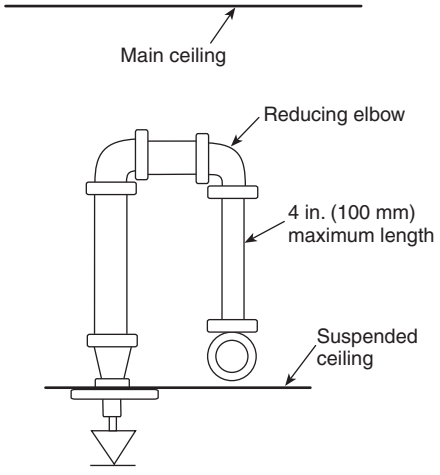

FIGURE 8.15.20.4.2 Nipple and Reducing Elbow Supplying Sprinkler Below Ceiling.

8.15.20.4.3 When it is necessary to pipe two new ceiling sprinklers from an existing outlet in an overhead system, the use of a nipple not exceeding 4 in. (100 mm) in length and of the same pipe thread size as the existing outlet shall be permitted, provided that a hydraulic calculation verifies that the design flow rate will be achieved in accordance with Figure 8.15.20.4.3.

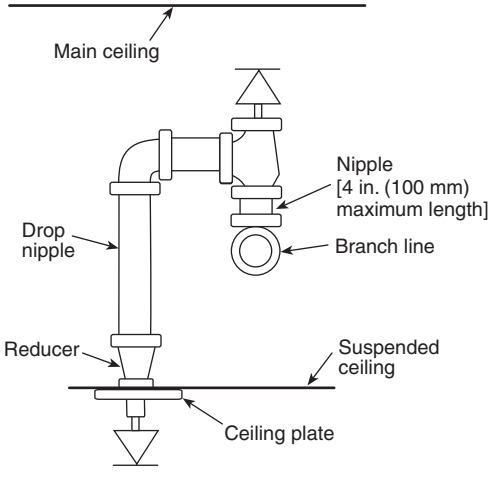

FIGURE 8.15.20.4.3 Sprinklers in Concealed Space and Below Ceiling.

8.15.20.4.4 Where an armover is attached to connect to a sprinkler, the use of pipe nipples less than 1 in. (25 mm) in diameter shall not be permitted where seismic design is required on the system.

8.15.20.5 Revamping of Hydraulic Design Systems.

8.15.20.5.1 When hydraulically designed systems are revamped, any existing bushing shall be removed and a nipple not exceeding 4 in. (100 mm) in length shall be permitted to be installed in the branch line fitting.

8.15.20.5.2* Calculations shall be provided to verify that the system design flow rate will be achieved.

8.15.20.5.3 When it is necessary to pipe two new ceiling sprinklers from an existing outlet in an overhead system, any bushings shall be removed and the use of a nipple not exceeding 4 in. (100 mm) in length and of the same pipe thread size as the existing outlet shall be permitted, provided that a hydraulic calculation verifies that the design flow rate will be achieved.

8.15.20.5.4 Where an armover is attached to connect to a sprinkler, the use of pipe nipples less than 1 in. (25 mm) in diameter shall not be permitted where seismic design is required on the system.

8.15.21 Dry Pipe Underground.

8.15.21.1 Where necessary to place pipe that will be under air pressure underground, the pipe shall be protected against corrosion.

8.15.21.2 Unprotected cast-iron or ductile-iron pipe shall be permitted where joined with a gasketed joint listed for air service underground.

8.15.22* System Subdivision. Where individual floor/zone control valves are not provided, a flanged joint or mechanical coupling shall be used at the riser at each floor for connections to piping serving floor areas in excess of 5000 ft^2 (465 m^2).

8.15.23 Spaces Above Ceilings.

8.15.23.1 Where spaces have ceilings that are lower than the rest of the area, the space above this lower ceiling shall be sprinklered unless it complies with the rules of 8.15.1.2 for allowable unsprinklered concealed spaces.

8.15.23.2 Where the space above a drop ceiling is sprinklered, the sprinkler system shall conform to the rules of 11.1.2 and Section 12.3.

8.15.23.3* Where there is a noncombustible space above a noncombustible or limited-combustible drop ceiling that is sprinklered because it is open to an adjacent sprinklered space on only one side and where there is no possibility for storage above the drop ceiling, the sprinkler system shall be permitted to extend only as far into the space as 0.6 times the square root of the design area of the sprinkler system in the adjacent space.

8.15.23.3.1 The sprinkler system shall extend at least 24 ft (7.2 m) into the space above the ceiling.

8.16 Piping Installation.

8.16.1 Valves.

8.16.1.1* Control Valves.

8.16.1.1.1* General.

8.16.1.1.1.1 Each sprinkler system shall be provided with a listed indicating valve in an accessible location, so located as to control all automatic sources of water supply.

8.16.1.1.1.2 At least one listed indicating valve shall be installed in each source of water supply.

8.16.1.1.1.3 The requirements of 8.16.1.1.1.2 shall not apply to the fire department connection, and there shall be no shutoff valve in the fire department connection.

8.16.1.1.2* Supervision.

8.16.1.1.2.1 Valves on connections to water supplies, sectional control and isolation valves, and other valves in supply pipes to

Copyright 2014 National Fire Protection Association (NFPA). Licensed, by agreement, for individual use and download on October 4, 2014 to LEADER and READER for designated user PATTARAPORN SRITRAKOOL. No other reproduction or transmission in any form permitted without written permission of NFPA. For inquires or to report unauthorized use, contact licensing@nfpa.org.

sprinklers and other fixed water-based fire suppression systems shall be supervised by one of the following methods:

(1) Central station, proprietary, or remote station signaling service
(2) Local signaling service that will cause the sounding of an audible signal at a constantly attended point
(3) Valves locked in the correct position
(4) Valves located within fenced enclosures under the control of the owner, sealed in the open position, and inspected weekly as part of an approved procedure

8.16.1.1.2.2 Floor control valves in high-rise buildings and valves controlling flow to sprinklers in circulating closed loop systems shall comply with 8.16.1.1.2.1(1) or 8.16.1.1.2.1(2).

8.16.1.1.2.3 The requirements of 8.16.1.1.2.1 shall not apply to underground gate valves with roadway boxes.

8.16.1.1.2.4 Where control valves are installed overhead, they shall be positioned so that the indicating feature is visible from the floor below.

8.16.1.1.2.5 A listed backflow prevention assembly shall be permitted to be considered a control valve, provided both control valves are listed for fire protection system use and an additional control valve shall not be required.

8.16.1.1.3* Check Valves.

8.16.1.1.3.1 Where there is more than one source of water supply, a check valve shall be installed in each connection.

8.16.1.1.3.2 A listed backflow prevention device shall be considered a check valve, and an additional check valve shall not be required.

8.16.1.1.3.3 Where cushion tanks are used with automatic fire pumps, no check valve is required in the cushion tank connection.

8.16.1.1.3.4 Check valves shall be installed in a vertical or horizontal position in accordance with their listing.

8.16.1.1.3.5* Where a single wet pipe sprinkler system is equipped with a fire department connection, the alarm valve is considered a check valve, and an additional check valve shall not be required.

8.16.1.1.4* Control Valves with Check Valves.

8.16.1.1.4.1 In a connection serving as one source of supply, listed indicating valves or post-indicator valves shall be installed on both sides of all check valves required in 8.16.1.1.3.

8.16.1.1.4.2 The city services control valve (non-indicating control valve) shall be permitted to serve as the supply side control valve.

8.16.1.1.4.3 The requirements of 8.16.1.1.4.1 shall not apply to the check valve located in the fire department connection piping, and there shall be no control valves in the fire department connection piping.

8.16.1.1.4.4 The requirements of 8.16.1.1.4.1 shall not apply where the city connection serves as the only automatic source of supply to a wet pipe sprinkler system; a control valve is not required on the system side of the check valve or the alarm check valve.

8.16.1.1.5* Control Valves for Gravity Tanks. Gravity tanks shall have listed indicating valves installed on both sides of the check valve.

8.16.1.1.6* Pumps. When a pump is located in a combustible pump house or exposed to danger from fire or falling walls, or when a tank discharges into a private fire service main fed by another supply, either the check valve in the connection shall be located in a pit or the control valve shall be of the post-indicator type located a safe distance outside buildings.

8.16.1.1.7* Control Valve Accessibility. All control valves shall be located where accessible and free of obstructions.

8.16.1.1.8 Control Valve Identification. Identification signs shall be provided at each valve to indicate its function and what it controls.

8.16.1.2 Pressure-Reducing Valves.

8.16.1.2.1 In portions of systems where all components are not listed for pressure greater than 175 psi (12.1 bar) and the potential exists for normal (nonfire condition) water pressure in excess of 175 psi (12.1 bar), a listed pressure-reducing valve shall be installed and set for an outlet pressure not exceeding 165 psi (11.37 bar) at the maximum inlet pressure.

8.16.1.2.2 Pressure gauges shall be installed on the inlet and outlet sides of each pressure-reducing valve.

8.16.1.2.3* A listed relief valve of not less than ½ in. (13 mm) in size shall be provided on the discharge side of the pressure-reducing valve set to operate at a pressure not exceeding the rated pressure of the components of the system.

8.16.1.2.4 A listed indicating valve shall be provided on the inlet side of each pressure-reducing valve, unless the pressure-reducing valve meets the listing requirements for use as an indicating valve.

8.16.1.2.5 Means shall be provided downstream of all pressure-reducing valves for flow tests at sprinkler system demand.

8.16.1.3* Post-Indicator Valves.

8.16.1.3.1 Where post-indicator valves are used, they shall be set so that the top of the post is 32 in. to 40 in. (0.8 m to 1.0 m) above the final grade.

8.16.1.3.2 Post-indicator valves shall be properly protected against mechanical damage where needed.

8.16.1.3.3 The requirements of 8.16.1.3.1 shall not apply to wall post-indicator valves.

8.16.1.4 Valves in Pits.

8.16.1.4.1 General. Where it is impractical to provide a post-indicator valve, valves shall be permitted to be placed in pits with permission of the authority having jurisdiction.

8.16.1.4.2* Valve Pit Construction.

8.16.1.4.2.1 When used, valve pits shall be of adequate size and accessible for inspection, operation, testing, maintenance, and removal of equipment contained therein.

8.16.1.4.2.2 Valve pits shall be constructed and arranged to properly protect the installed equipment from movement of earth, freezing, and accumulation of water.

8.16.1.4.2.3 Poured-in-place or precast concrete, with or without reinforcement, or brick (all depending upon soil conditions and size of pit) shall be appropriate materials for construction of valve pits.

8.16.1.4.2.4 Other approved materials shall be permitted to be used for valve pit construction.

Copyright 2014 National Fire Protection Association (NFPA). Licensed, by agreement, for individual use and download on October 4, 2014 to LEADER and READER for designated user PATTARAPORN SRITRAKOOL. No other reproduction or transmission in any form permitted without written permission of NFPA. For inquires or to report unauthorized use, contact licensing@nfpa.org.

8.16.1.4.2.5 Where the water table is low and the soil is porous, crushed stone or gravel shall be permitted to be used for the floor of the pit. *[See Figure A.8.17.2(b) for a suggested arrangement.]*

8.16.1.4.2.6 Valve pits located at or near the base of the riser of an elevated tank shall be designed in accordance with Chapter 9 of NFPA 22.

8.16.1.4.3 Valve Pit Marking. The location of the valve shall be clearly marked, and the cover of the pit shall be kept free of obstructions.

8.16.1.5 Floor Control Valve Assemblies.

8.16.1.5.1* Multistory buildings exceeding two stories in height shall be provided with a floor control valve, check valve, main drain valve, and flow switch for isolation, control, and annunciation of water flow on each floor level.

8.16.1.5.2 The floor control valve, check valve, main drain valve, and flow switch required by 8.16.1.6.3 shall not be required where sprinklers on the top level of a multistory building are supplied by piping on the floor below.

8.16.1.5.3 The floor control valve, check valve, main drain valve, and flow switch required by 8.16.1.6.3 shall not be required where the total area of all floors combined does not exceed the system protection area limitations of 8.2.1.

8.16.1.6* In-Rack Sprinkler System Control Valves.

8.16.1.6.1 Unless the requirements of 8.16.1.6.2 or 8.16.1.6.3 are met, where sprinklers are installed in racks, separate indicating control valves and drains shall be provided and arranged so that ceiling and in-rack sprinklers can be controlled independently.

8.16.1.6.2 Installation of 20 or fewer in-rack sprinklers supplied by any one ceiling sprinkler system shall not require a separate indicating control valve.

8.16.1.6.3 The separate indicating valves shall be permitted to be arranged as sectional control valves supplied from the ceiling sprinkler system where in-rack sprinklers are required and the racks including the adjacent aisles occupy 8000 ft^2 (750 m^2) or less of the area protected by the ceiling sprinklers.

8.16.2 Drainage.

8.16.2.1* General. All sprinkler pipe and fittings shall be installed so that the system can be drained.

8.16.2.2 Wet Pipe Systems.

8.16.2.2.1 On wet pipe systems, sprinkler pipes shall be permitted to be installed level.

8.16.2.2.2 Trapped piping shall be drained in accordance with 8.16.2.5.

8.16.2.3 Dry Pipe and Preaction Systems. Piping shall be pitched to drain as stated in 8.16.2.3.1 through 8.16.2.3.3.

8.16.2.3.1 Dry Pipe Systems in Nonrefrigerated Areas. In dry pipe system, branch lines shall be pitched at least ½ in. per 10 ft (4 mm/m), and mains shall be pitched at least ¼ in. per 10 ft (2 mm/m) in nonrefrigerated areas.

8.16.2.3.2 Preaction Systems. In preaction systems, branch lines shall be pitched at least ½ in. per 10 ft (4 mm/m), and mains shall be pitched at least ¼ in. per 10 ft (2 mm/m).

8.16.2.3.3 Dry Pipe and Preaction Systems in Refrigerated Areas. Branch lines shall be pitched at least ½ in. per 10 ft (4 mm/m), and mains shall be pitched at least ½ in. per 10 ft (4 mm/m) in refrigerated areas.

8.16.2.4* System, Main Drain, or Sectional Drain Connections.

8.16.2.4.1* Provisions shall be made to properly drain all parts of the system.

8.16.2.4.2 Drain connections for systems supply risers and mains shall be sized as shown in Table 8.16.2.4.2.

Table 8.16.2.4.2 Drain Size

Riser or Main Size (in.)	Size of Drain Connection (in.)
Up to 2	¾ or larger
2½, 3, 3½	1¼ or larger
4 and larger	2 only

For SI units, 1 in. = 25.4 mm.

8.16.2.4.3 Where an interior sectional or floor control valve(s) is provided, it shall be provided with a drain connection having a minimum size as shown in Table 8.16.2.4.2 to drain that portion of the system controlled by the sectional valve.

8.16.2.4.4 Drains shall discharge outside or to a drain connection capable of handling the flow of the drain. *[See Figure A.8.17.4.2(b).]*

8.16.2.4.5 For those drains serving pressure-reducing valves, the drain, drain connection, and all other downstream drain piping shall be sized to permit a flow of at least the greatest system demand supplied by the pressure-reducing valve.

8.16.2.4.6 The test connections required by 8.17.4.1 shall be permitted to be used as main drain connections.

8.16.2.4.7 Where drain connections for floor control valves are tied into a common drain riser, the drain riser shall be one pipe size larger downstream of each size drain connection tying into it.

8.16.2.4.8 Where subject to freezing, a minimum 4 ft (1.22 m) of exposed drain pipe shall be in a heated area between the drain valve and the exterior wall when drain piping extends through the wall to the outside.

8.16.2.5 Auxiliary Drains.

8.16.2.5.1 Auxiliary drains shall be provided where a change in piping direction prevents drainage of system piping through the main drain valve.

8.16.2.5.2 Auxiliary Drains for Wet Pipe Systems and Preaction Systems in Areas Not Subject to Freezing.

8.16.2.5.2.1* Where the capacity of isolated trapped sections of pipe is 50 gal (189 L) or more, the auxiliary drain shall consist of a valve not smaller than 1 in. (25 mm), piped to an accessible location.

8.16.2.5.2.2 Where the capacity of isolated trapped sections of pipe is more than 5 gal (18.9 L) and less than 50 gal (189 L), the auxiliary drain shall consist of a valve ¾ in. (20 mm) or larger and a plug or a nipple and cap.

8.16.2.5.2.3 Where the capacity of trapped sections of pipes in wet systems is less than 5 gal (18.9 L), one of the following arrangements shall be provided:

Copyright 2014 National Fire Protection Association (NFPA). Licensed, by agreement, for individual use and download on October 4, 2014 to LEADER and READER for designated user PATTARAPORN SRITRAKOOL. No other reproduction or transmission in any form permitted without written permission of NFPA. For inquires or to report unauthorized use, contact licensing@nfpa.org.

(1) An auxiliary drain shall consist of a nipple and cap or plug not less than ½ in. (15 mm) in size.
(2) An auxiliary drain shall not be required for trapped sections less than 5 gal (18.9 L) where the system piping can be drained by removing a single pendent sprinkler.
(3) Where flexible couplings or other easily separated connections are used, the nipple and cap or plug shall be permitted to be omitted.

8.16.2.5.2.4 Tie-in drains shall not be required on wet pipe systems and preaction systems protecting nonfreezing environments.

8.16.2.5.3 Auxiliary Drains for Dry Pipe Systems and Preaction Systems.

8.16.2.5.3.1 Auxiliary drains located in areas subject to freezing shall be accessible.

8.16.2.5.3.2 Auxiliary drains located in areas maintained at freezing temperatures shall be accessible and shall consist of a valve not smaller than 1 in. (25 mm) and a plug or a nipple and cap.

8.16.2.5.3.3 Where the capacity of trapped sections of pipe is less than 5 gal (18.9 L), the auxiliary drain shall consist of a valve not smaller than ½ in. (13 mm) and a plug or a nipple and cap.

8.16.2.5.3.4 Auxiliary drains are not for pipe drops supplying dry pendent sprinklers installed in accordance with 7.2.2.

8.16.2.5.3.5* Where the capacity of isolated trapped sections of system piping is more than 5 gal (18.9 L), the auxiliary drain shall consist of two 1 in. (25 mm) valves and one 2 in. × 12 in. (50 mm × 305 mm) condensate nipple or equivalent, accessibly located in accordance with Figure 8.16.2.5.3.5, or a device listed for this service.

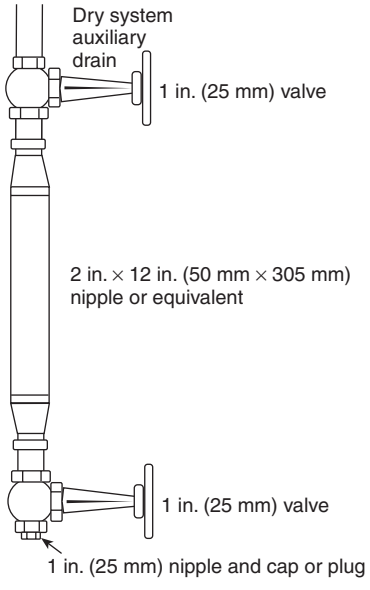

FIGURE 8.16.2.5.3.5 Dry System Auxiliary Drain.

8.16.2.5.3.6 Tie-in drains shall be provided for multiple adjacent trapped branch pipes and shall be only 1 in. (25 mm). Tie-in drain lines shall be pitched a minimum of ½ in. per 10 ft (4 mm/m).

8.16.2.5.3.7 Systems with low point drains shall have a sign at the dry pipe or preaction valve indicating the number of low point drains and the location of each individual drain.

8.16.2.6 Discharge of Drain Valves.

8.16.2.6.1* Direct interconnections shall not be made between sprinkler drains and sewers.

8.16.2.6.2 The drain discharge shall conform to any health or water department regulations.

8.16.2.6.3 Where drain pipes are buried underground, approved corrosion-resistant pipe shall be used.

8.16.2.6.4 Drain pipes shall not terminate in blind spaces under the building.

8.16.2.6.5 Where exposed to the atmosphere, drain pipes shall be fitted with a turned-down elbow.

8.16.2.6.6 Drain pipes shall be arranged to avoid exposing any of the water-filled portion of the sprinkler system to freezing conditions.

8.16.3 Provision for Flushing Systems.

8.16.3.1 All sprinkler systems shall be arranged for flushing.

8.16.3.2 Readily removable fittings shall be provided at the end of all cross mains.

8.16.3.3 All cross mains shall terminate in 1¼ in. (32 mm) or larger pipe.

8.16.3.4 All branch lines on gridded systems shall be arranged to facilitate flushing.

8.16.4 Protection of Piping.

8.16.4.1 Protection of Piping Against Freezing.

8.16.4.1.1* Where any portion of a system is subject to freezing and the temperatures cannot be reliably maintained at or above 40°F (4°C), the system shall be installed as a dry pipe or preaction system.

8.16.4.1.1.1 The requirements of 8.16.4.1.1 shall not apply where alternate methods of freeze prevention are provided in accordance with one of the methods described in 8.16.4.1.2 through 8.16.4.1.4.1.

8.16.4.1.2 Unheated areas shall be permitted to be protected by antifreeze systems or by other systems specifically listed for the purpose.

8.16.4.1.3 Where aboveground water-filled supply pipes, risers, system risers, or feed mains pass through open areas, cold rooms, passageways, or other areas exposed to temperatures below 40°F (4°C), the pipe shall be permitted to be protected against freezing by insulating coverings, frostproof casings, or other means of maintaining a minimum temperature between 40°F and 120°F (4°C and 48.9°C).

8.16.4.1.4 Listed heat-tracing systems shall be permitted in accordance with 8.16.4.1.4.1 and 8.16.4.1.4.2.

8.16.4.1.4.1 Where used to protect branch lines, the heat-tracing system shall be specifically listed for use on branch lines.

8.16.4.1.4.2 Electric supervision of the heat-tracing system shall provide positive confirmation that the circuit is energized.

8.16.4.1.5 Water-filled piping shall be permitted to be installed in areas where the temperature is less than 40°F (4°C) when heat loss calculations performed by a professional engineer verify that the system will not freeze.

Copyright 2014 National Fire Protection Association (NFPA). Licensed, by agreement, for individual use and download on October 4, 2014 to LEADER and READER for designated user PATTARAPORN SRITRAKOOL. No other reproduction or transmission in any form permitted without written permission of NFPA. For inquires or to report unauthorized use, contact licensing@nfpa.org.

8.16.4.2* Protection of Piping Against Corrosion.

8.16.4.2.1* Where corrosive conditions are known to exist due to moisture or fumes from corrosive chemicals or both, special types of fittings, pipes, and hangers that resist corrosion shall be used, or a protective coating shall be applied to all unprotected exposed surfaces of the sprinkler system.

8.16.4.2.2* Where water supplies or environmental conditions are known to have unusual corrosive properties, piping shall have a corrosion resistance ratio (CRR) of 1 or more, and the system shall be treated in accordance with 24.1.5.

8.16.4.2.3 Where corrosive conditions exist or piping is exposed to the weather, corrosion-resistant types of pipe, fittings, and hangers or protective corrosion-resistant coatings shall be used.

8.16.4.2.4 Where steel pipe is used underground, the pipe shall be protected against corrosion.

8.16.4.3* Protection of Piping in Hazardous Areas.

8.16.4.3.1 Private service main aboveground piping shall not pass through hazardous areas and shall be located so that it is protected from mechanical and fire damage.

8.16.4.3.2 Private service main aboveground piping shall be permitted to be located in hazardous areas protected by an automatic sprinkler system.

8.16.5 Protection of Risers Subject to Mechanical Damage. Sprinkler risers subject to mechanical damage shall be protected by steel posts, concrete barriers, or other approved means.

8.17 System Attachments.

8.17.1* Sprinkler Alarms/Waterflow Alarms.

8.17.1.1 Local Waterflow Alarms. A local waterflow alarm shall be provided on every sprinkler system having more than 20 sprinklers.

8.17.1.2 Retarding Devices. On each alarm check valve used under conditions of variable water pressure, a retarding device shall be installed.

8.17.1.3 Alarm Bypass Test Connections.

8.17.1.3.1 Alarm, dry pipe, preaction, and deluge valves shall be fitted with an alarm bypass test connection for an electric alarm switch, water motor gong, or both.

8.17.1.3.2 The alarm bypass test connection for alarm, dry pipe, preaction, and deluge valves shall be made on the water supply side of the system and provided with a control valve and drain for the alarm piping.

8.17.1.3.3 The alarm bypass test connection for alarm valves at the riser shall be permitted to be made on the system side of an alarm valve.

8.17.1.3.4 A check valve shall be installed between the intermediate chamber of a dry pipe valve and the waterflow alarm device so as to prevent flow from the alarm bypass test connection from entering the intermediate chamber of a dry pipe valve during an alarm test via the alarm bypass test connection.

8.17.1.4 Indicating Control Valves.

8.17.1.4.1 Where a control valve is installed in the connection to pressure-type contactors or water motor-operated alarm devices, it shall be of the indicating type.

8.17.1.4.2 Such valves shall be sealed, locked, or electrically supervised in the open position.

8.17.1.5* Attachments — Mechanically Operated.

8.17.1.5.1 For all types of sprinkler systems employing water motor-operated alarms, a listed ¾ in. (20 mm) strainer shall be installed at the alarm outlet of the waterflow detecting device.

8.17.1.5.2 Where a retarding chamber is used in connection with an alarm valve, the strainer shall be located at the outlet of the retarding chamber unless the retarding chamber is provided with an approved integral strainer in its outlet.

8.17.1.6* Alarm Attachments — High-Rise Buildings. When a fire must be fought internally due to the height of a building, the following additional alarm apparatus shall be provided:

(1) Each sprinkler system on each floor shall be equipped with a separate waterflow device. The waterflow device shall be connected to an alarm system in such a manner that operation of one sprinkler will actuate the alarm system, and the location of the operated flow device shall be indicated on an annunciator and/or register. The annunciator or register shall be located at grade level at the normal point of fire department access, at a constantly attended building security control center, or at both locations.
(2) Where the location within the protected buildings where supervisory or alarm signals are received is not under constant supervision by qualified personnel in the employ of the owner, a connection shall be provided to transmit a signal to a remote central station.
(3) A distinct trouble signal shall be provided to indicate a condition that will impair the satisfactory operation of the sprinkler system.

8.17.1.7 Sprinkler Waterflow Alarm for In-Rack Sprinklers. See Section C.4.

8.17.2* Fire Department Connections.

8.17.2.1* Unless the requirements of 8.17.2.2 are met, a fire department connection shall be provided as described in 8.17.2 in accordance with Figure 8.17.2.1.

8.17.2.2 The following systems shall not require a fire department connection:

(1) Buildings located in remote areas that are inaccessible for fire department support
(2) Large-capacity deluge systems exceeding the pumping capacity of the fire department
(3) Single-story buildings not exceeding 2000 ft^2 (186 m^2) in area

8.17.2.3* Size. The size of the pipe for the fire department connection shall be in accordance with one of the following:

(1) Pipe size shall be a minimum of 4 in. (100 mm) for fire engine connections.
(2) Pipe size shall be a minimum of 6 in. (150 mm) for fire boat connections.
(3) For hydraulically calculated systems, the fire department connection shall be permitted to be less than 4 in. (100 mm) and no less than the size of system riser, where serving one system riser.

8.17.2.4* Arrangement. See Figure 8.17.2.1.

8.17.2.4.1* The fire department connection shall be on the system side of the water supply check valve.

8.17.2.4.1.1 The fire department connection shall not be attached to branch line piping.

Copyright 2014 National Fire Protection Association (NFPA). Licensed, by agreement, for individual use and download on October 4, 2014 to LEADER and READER for designated user PATTARAPORN SRITRAKOOL. No other reproduction or transmission in any form permitted without written permission of NFPA. For inquires or to report unauthorized use, contact licensing@nfpa.org.

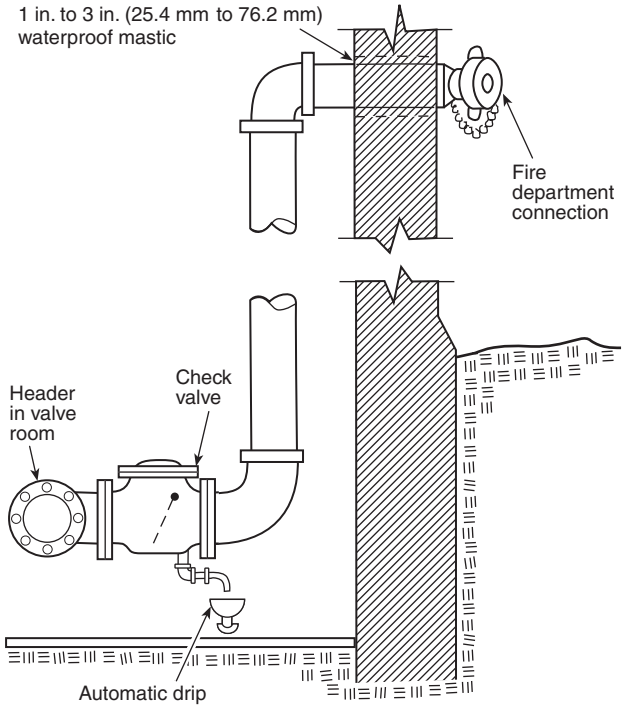

FIGURE 8.17.2.1 Fire Department Connection.

8.17.2.4.1.2 The fire department connection shall be permitted to be connected to main piping on the system it serves.

8.17.2.4.2 For single systems, the fire department connection shall be installed as follows:

(1) Wet system — on the system side of system control, check, and alarm valves *(see Figure A.8.16.1.1)*
(2) Dry system — between the system control valve and the dry pipe valve
(3) Preaction system — between the preaction valve and the check valve on the system side of the preaction valve
(4) Deluge system — on the system side of the deluge valve

8.17.2.4.3 For multiple systems, the fire department connection shall be connected between the supply control valves and the system control valves.

8.17.2.4.4* The requirements of 8.17.2.4.2 and 8.17.2.4.3 shall not apply where the fire department connection is connected to the underground piping.

8.17.2.4.5 Where a fire department connection services only a portion of a building, a sign shall be attached indicating the portions of the building served.

8.17.2.4.6* Fire department connections shall be located at the nearest point of fire department apparatus accessibility or at a location approved by the authority having jurisdiction.

8.17.2.4.7 Signs.

8.17.2.4.7.1 Each fire department connection to sprinkler systems shall be designated by a sign having raised or engraved letters at least 1 in. (25.4 mm) in height on plate or fitting reading service design — for example, AUTOSPKR., OPEN SPKR., AND STANDPIPE.

8.17.2.4.7.2 A sign shall also indicate the pressure required at the inlets to deliver the greatest system demand.

8.17.2.4.7.3 The sign required in 8.17.2.4.7.2 shall not be required where the system demand pressure is less than 150 psi (10.3 bar).

8.17.2.4.8 Fire department connections shall not be connected on the suction side of fire pumps.

8.17.2.4.9 Fire department connections shall be properly supported.

8.17.2.5 Valves.

8.17.2.5.1 A listed check valve shall be installed in each fire department connection and shall be located in an accessible location.

8.17.2.5.2 There shall be no shutoff valve in the fire department connection piping.

8.17.2.6* Drainage. The piping between the check valve and the outside hose coupling shall be equipped with an approved automatic drip in areas subject to freezing.

8.17.3 Gauges.

8.17.3.1 A pressure gauge with a connection not smaller than ¼ in. (6 mm) shall be installed at the system main drain, at each main drain associated with a floor control valve, and on the inlet and outlet side of each pressure-reducing valve.

8.17.3.2 Each gauge connection shall be equipped with a shutoff valve and provisions for draining.

8.17.3.3 The required pressure gauges shall be approved and shall have a maximum limit not less than twice the normal system working pressure at the point where installed.

8.17.3.4 Gauges shall be installed to permit removal and shall be located where they will not be subject to freezing.

8.17.4 System Connections.

8.17.4.1* Main Drain Test Connections.

8.17.4.1.1 Main drain test connections shall be provided at locations that will permit flow tests of water supplies and connections.

8.17.4.1.2 They shall be so installed that the valve can be opened wide for a sufficient time to assure a proper test without causing water damage.

8.17.4.1.3 Main drain connections shall be sized in accordance with 8.16.2.4 and 8.16.2.6.

8.17.4.2* Wet Pipe Systems.

8.17.4.2.1 An alarm test connection not less than 1 in. (25 mm) in diameter, terminating in a smooth bore corrosion-resistant orifice, giving a flow equal to or less than one sprinkler of a type having the smallest K-factor installed on the particular system, shall be provided to test each waterflow alarm device for each system.

8.17.4.2.2 The test connection valve shall be accessible.

8.17.4.2.3 The discharge shall be to the outside, to a drain connection capable of accepting full flow under system pressure, or to another location where water damage will not result.

8.17.4.2.4 The alarm test connection shall be permitted to be installed in any location on the fire sprinkler system downstream of the waterflow alarm.

Copyright 2014 National Fire Protection Association (NFPA). Licensed, by agreement, for individual use and download on October 4, 2014 to LEADER and READER for designated user PATTARAPORN SRITRAKOOL. No other reproduction or transmission in any form permitted without written permission of NFPA. For inquires or to report unauthorized use, contact licensing@nfpa.org.

8.17.4.3* Dry Pipe Systems.

8.17.4.3.1 A trip test connection or manifold not less than 1 in. (25 mm) in diameter, terminating in a smooth bore corrosion-resistant orifice, to provide a flow equivalent to one sprinkler of a type installed on the particular system, shall be installed.

8.17.4.3.2 The trip test connection or manifold shall be located on the end of the most distant sprinkler pipe in the upper story and shall be equipped with an accessible shutoff valve and a plug not less than 1 in. (25 mm), of which at least one shall be brass.

8.17.4.3.3 In lieu of a plug, a nipple and cap shall be acceptable.

8.17.4.3.4 When the capacity (volume) of the dry pipe system has been determined in accordance with 7.2.3.2, 7.2.3.3, 7.2.3.4 or 7.2.3.5, a trip test connection shall be permitted to provide a flow equivalent to one sprinkler in accordance with 8.17.4.3.1 through 8.17.4.3.3.

8.17.4.3.5 When the capacity (volume) of the dry pipe system has been determined in accordance with 7.2.3.7, the following shall apply:

(1) When flow is from four sprinklers, the trip test manifold shall be arranged to simulate two sprinklers on each of two sprinkler branch lines.
(2) When flow is from three sprinklers, the test manifold shall be arranged to simulate two sprinklers on the most remote branch line and one sprinkler on the next adjacent branch line.
(3) When flow is from two sprinklers, the test manifold shall be arranged to simulate two sprinklers on the most remote branch line.
(4) When flow is from one sprinkler, the test manifold shall be installed per the requirements for a trip test connection in accordance with 8.17.4.3.1 through 8.17.4.3.3.

8.17.4.4 Preaction Systems.

8.17.4.4.1 A test connection shall be provided on a preaction system using supervisory air.

8.17.4.4.2 The connection used to control the level of priming water shall be considered adequate to test the operation of the alarms monitoring the supervisory air pressure.

8.17.4.4.3 For double interlock preaction systems, a trip test connection or manifold not less than 1 in. (25 mm) in diameter, terminating in a smooth bore corrosion-resistant orifice to provide a flow equivalent to one sprinkler of a type installed on the particular system, shall be installed.

8.17.4.4.4 For double interlock preaction systems, the trip test connection or manifold shall be located on the end of the most distant sprinkler pipe in the upper story and shall be equipped with an accessible shutoff valve and a plug not less than 1 in. (25 mm), of which at least one shall be brass.

8.17.4.4.5 In lieu of a plug, a nipple and cap shall be acceptable.

8.17.4.4.6 When the capacity (volume) of the double interlock preaction system has been determined in accordance with 7.3.2.3.1.1, 7.3.2.3.1.2, or 7.3.2.3.1.3, a trip test connection shall be permitted to provide a flow equivalent to one sprinkler in accordance with 8.17.4.4.3 through 8.17.4.4.5.

8.17.4.4.7 When the capacity (volume) of the double interlock preaction system has been determined in accordance with 7.3.2.3.1.4, the following shall apply:

(1) When flow is from four sprinklers, the trip test manifold shall be arranged to simulate two sprinklers on each of two sprinkler branch lines.
(2) When flow is from three sprinklers, the test manifold shall be arranged to simulate two sprinklers on the most remote branch line and one sprinkler on the next adjacent branch line.
(3) When flow is from two sprinklers, the test manifold shall be arranged to simulate two sprinklers on the most remote branch line.
(4) When flow is from one sprinkler, the test manifold shall be installed as per the requirements for a trip test connection in accordance with 8.17.4.4.3 through 8.17.4.4.5.

8.17.4.5 Deluge Systems. A test connection shall not be required on a deluge system.

8.17.4.6* Backflow Devices.

8.17.4.6.1* Backflow Prevention Valves. Means shall be provided downstream of all backflow prevention valves for flow tests at system demand.

8.17.4.6.2 Retroactive Installation. When backflow prevention devices are to be retroactively installed on existing systems, a thorough hydraulic analysis, including revised hydraulic calculations, new fire flow data, and all necessary system modifications to accommodate the additional friction loss, shall be completed as a part of the installation.

8.17.5 Hose Connections.

8.17.5.1 Small [1½ in. (38 mm)] Hose Connections. See Section C.5.

8.17.5.1.1* Where required, small [1½ in. (40 mm)] hose connections shall be installed.

8.17.5.1.1.1 Valves shall be available to reach all portions of the area with 100 ft (30.5 m) of hose plus 30 ft (9.1 m) of hose stream distance.

8.17.5.1.1.2 Where the building is protected throughout by an approved automatic sprinkler system, the presence of 1½ in. (38 mm) hose lines for use by the building occupants shall not be required, subject to the approval of the authority having jurisdiction.

8.17.5.1.1.3 Where approved by the authority having jurisdiction, the location of valves shall be permitted to exceed the distances specified in 8.17.5.1.1.1.

8.17.5.1.2 The hose connections shall not be required to meet the requirements of Class II hose systems defined by NFPA 14.

8.17.5.1.3 Hose connections shall be supplied from one of the following:

(1) Outside hydrants
(2) Separate piping system for small hose connections
(3) Valved hose connections on sprinkler risers where such connections are made upstream of all sprinkler control valves
(4) Adjacent sprinkler systems
(5) In rack storage areas, the ceiling sprinkler system in the same area (as long as in-rack sprinklers are provided in the same area and are separately controlled)
(6) In nonstorage occupancies that are not a part of a standpipe system, ceiling sprinkler piping in the same area as the hose connection

Copyright 2014 National Fire Protection Association (NFPA). Licensed, by agreement, for individual use and download on October 4, 2014 to LEADER and READER for designated user PATTARAPORN SRITRAKOOL. No other reproduction or transmission in any form permitted without written permission of NFPA. For inquires or to report unauthorized use, contact licensing@nfpa.org.

8.17.5.1.4* Hose connections used for fire purposes only shall be permitted to be connected to wet pipe sprinkler systems only, subject to the following restrictions:

(1) Hose connection's supply pipes shall not be connected to any pipe smaller than 2½ in. (65 mm) in diameter.
(2) The requirements of 8.17.5.1.4(1) shall not apply to hydraulically designed loops and grids, where the minimum size pipe between the hose connection's supply pipe and the source shall be permitted to be 2 in. (51 mm).
(3) For piping serving a single hose connection, pipe shall be a minimum of 1 in. (25.4 mm) for horizontal runs up to 20 ft (6.1 m), a minimum of 1¼ in. (33 mm) for the entire run for runs between 20 ft and 80 ft (6.1 m and 24.4 m), and a minimum of 1½ in. (38 mm) for the entire run for runs greater than 80 ft (24.4 m). For piping serving multiple hose connections, runs shall be a minimum of 1½ in. (38 mm) throughout.
(4) Piping shall be at least 1 in. (25 mm) for vertical runs.
(5) Where the residual pressure at a 1½ in. (38 mm) outlet on a hose connection exceeds 100 psi (6.9 bar), an approved pressure-regulating device shall be provided to limit the residual pressure at the outlet to 100 psi (6.9 bar).
(6) Where the static pressure at a 1½ in. (38 mm) hose connection exceeds 175 psi (12.1 bar), an approved pressure-regulating device shall be provided to limit static and residual pressures at the outlet to 100 psi (6.9 bar).

8.17.5.2 Hose Connections for Fire Department Use.

8.17.5.2.1 In buildings of light or ordinary hazard occupancy, 2½ in. (64 mm) hose valves for fire department use shall be permitted to be attached to wet pipe sprinkler system risers.

8.17.5.2.2* The following restrictions shall apply:

(1) Each connection from a standpipe that is part of a combined system to a sprinkler system shall have an individual control valve and check valve of the same size as the connection.
(2) The minimum size of the riser shall be 4 in. (102 mm) unless hydraulic calculations indicate that a smaller size riser will satisfy sprinkler and hose stream allowances.
(3) Each combined sprinkler and standpipe riser shall be equipped with a riser control valve to permit isolating a riser without interrupting the supply to other risers from the same source of supply. *(For fire department connections serving standpipe and sprinkler systems, refer to Section 6.8.)*

Chapter 9 Hanging, Bracing, and Restraint of System Piping

9.1 Hangers.

9.1.1* General.

9.1.1.1 Unless the requirements of 9.1.1.2 are met, types of hangers shall be in accordance with the requirements of Section 9.1.

9.1.1.2 Hangers certified by a registered professional engineer to include all of the following shall be an acceptable alternative to the requirements of Section 9.1:

(1) Hangers shall be designed to support five times the weight of the water-filled pipe plus 250 lb (114 kg) at each point of piping support.
(2) These points of support shall be adequate to support the system.
(3) The spacing between hangers shall not exceed the value given for the type of pipe as indicated in Table 9.2.2.1(a) or Table 9.2.2.1(b).
(4) Hanger components shall be ferrous.
(5) Detailed calculations shall be submitted, when required by the reviewing authority, showing stresses developed in hangers, piping, and fittings, and safety factors allowed.

9.1.1.3 Shared support structures shall be certified by a registered professional engineer in accordance with 9.1.1.2 and 9.1.1.3.

9.1.1.3.1* The design of a shared support structure shall be based on either 9.1.1.3.1.1 or 9.1.1.3.1.2.

9.1.1.3.1.1 Sprinkler pipe and other distribution systems shall be permitted to be supported from a shared support structure designed to support five times the weight of water-filled sprinkler pipe and other supported distribution systems plus 250 lb (114 kg), based on the allowable ultimate stress.

9.1.1.3.1.2 Sprinkler pipe and other distribution systems shall be permitted to be supported from a shared support structure designed to support five times the weight of the water-filled sprinkler pipe plus 250 lb (114 kg), and one and one-half times the weight of all other supported distribution systems.

9.1.1.3.1.3 The building structure shall not be considered a shared support structure.

9.1.1.3.1.4* The requirements of 9.1.1.3.1 shall not apply to 9.2.1.3.3.

9.1.1.3.1.5 Systems that are incompatible with the fire sprinkler systems based on vibration, thermal expansion and contraction, or other factors shall not share support structures.

9.1.1.4 Where water-based fire protection systems are required to be protected against damage from earthquakes, hangers shall also meet the requirements of 9.3.7.

9.1.1.5 Listing.

9.1.1.5.1 Unless permitted by 9.1.1.5.2 or 9.1.1.5.3, the components of hanger assemblies that directly attach to the pipe or to the building structure shall be listed.

9.1.1.5.2* Mild steel hangers formed from rods shall be permitted to be not listed.

9.1.1.5.3* Fasteners as specified in 9.1.3, 9.1.4, and 9.1.5 shall be permitted to be not listed.

9.1.1.5.4 Other fasteners shall be permitted as part of a hanger assembly that has been tested, listed, and installed in accordance with the listing requirements.

9.1.1.6 Component Material.

9.1.1.6.1 Unless permitted by 9.1.1.6.2 or 9.1.1.6.3, hangers and their components shall be ferrous.

9.1.1.6.2 Nonferrous components that have been proven by fire tests to be adequate for the hazard application, that are listed for this purpose, and that are in compliance with the other requirements of this section shall be acceptable.

9.1.1.6.3 Holes through solid structural members shall be permitted to serve as hangers for the support of system piping provided such holes are permitted by applicable building codes and the spacing and support provisions for hangers of this standard are satisfied.

9.1.1.7* Trapeze Hangers.

9.1.1.7.1 For trapeze hangers, the minimum size of steel angle or pipe span between purlins or joists shall be such that the section modulus required in Table 9.1.1.7.1(a) does not exceed the available section modulus of the trapeze member from Table 9.1.1.7.1(b).

Copyright 2014 National Fire Protection Association (NFPA). Licensed, by agreement, for individual use and download on October 4, 2014 to LEADER and READER for designated user PATTARAPORN SRITRAKOOL. No other reproduction or transmission in any form permitted without written permission of NFPA. For inquires or to report unauthorized use, contact licensing@nfpa.org.

Table 9.1.1.7.1(a) Section Modulus Required for Trapeze Members (in.^{3})

Nominal Diameter of Pipe Being Supported — Schedule 10 Steel												
Span (ft)	**1**	**1.25**	**1.5**	**2**	**2.5**	**3**	**3.5**	**4**	**5**	**6**	**8**	**10**
1.5	0.08	0.08	0.09	0.09	0.10	0.11	0.12	0.13	0.15	0.18	0.26	0.34
2.0	0.11	0.11	0.12	0.13	0.14	0.15	0.16	0.17	0.20	0.24	0.34	0.45
2.5	0.14	0.14	0.15	0.16	0.18	0.21	0.23	0.25	0.30	0.36	0.50	0.69
3.0	0.16	0.17	0.18	0.19	0.20	0.22	0.24	0.26	0.31	0.36	0.51	0.67
3.5	0.19	0.20	0.21	0.22	0.24	0.26	0.28	0.30	0.36	0.42	0.60	0.78
4.0	0.22	0.22	0.24	0.25	0.27	0.30	0.32	0.34	0.41	0.48	0.68	0.89
4.5	0.24	0.25	0.27	0.28	0.30	0.33	0.36	0.38	0.46	0.54	0.77	1.01
5.0	0.27	0.28	0.30	0.31	0.34	0.37	0.40	0.43	0.51	0.60	0.85	1.12
5.5	0.30	0.31	0.33	0.34	0.37	0.41	0.44	0.47	0.56	0.66	0.94	1.23
6.0	0.33	0.34	0.35	0.38	0.41	0.44	0.48	0.51	0.61	0.71	1.02	1.34
6.5	0.35	0.36	0.38	0.41	0.44	0.48	0.52	0.56	0.66	0.77	1.11	1.45
7.0	0.38	0.39	0.41	0.44	0.47	0.52	0.56	0.60	0.71	0.83	1.19	1.56
7.5	0.41	0.42	0.44	0.47	0.51	0.55	0.60	0.64	0.76	0.89	1.28	1.68
8.0	0.43	0.45	0.47	0.50	0.54	0.59	0.63	0.68	0.82	0.95	1.36	1.79
8.5	0.46	0.48	0.50	0.53	0.58	0.63	0.67	0.73	0.87	1.01	1.45	1.90
9.0	0.49	0.50	0.53	0.56	0.61	0.66	0.71	0.77	0.92	1.07	1.53	2.01
9.5	0.52	0.53	0.56	0.60	0.64	0.70	0.75	0.81	0.97	1.13	1.62	2.12
10.0	0.54	0.56	0.59	0.63	0.68	0.74	0.79	0.85	1.02	1.19	1.70	2.23
10.5	0.57	0.59	0.62	0.66	0.71	0.78	0.83	0.90	1.07	1.25	1.79	2.35
11.0	0.60	0.62	0.65	0.69	0.74	0.81	0.87	0.94	1.12	1.31	1.87	2.46
11.5	0.63	0.64	0.68	0.72	0.78	0.85	0.91	0.98	1.17	1.37	1.96	2.57
12.0	0.65	0.67	0.71	0.75	0.81	0.89	0.95	1.02	1.22	1.43	2.04	2.68
12.5	0.68	0.70	0.74	0.78	0.85	0.92	0.99	1.07	1.27	1.49	2.13	2.79
13.0	0.71	0.73	0.77	0.81	0.88	0.96	1.03	1.11	1.33	1.55	2.21	2.90
13.5	0.73	0.76	0.80	0.85	0.91	1.00	1.07	1.15	1.38	1.61	2.30	3.02
14.0	0.76	0.78	0.83	0.88	0.95	1.03	1.11	1.20	1.43	1.67	2.38	3.13
14.5	0.79	0.81	0.86	0.91	0.98	1.07	1.15	1.24	1.48	1.73	2.47	3.24
15.0	0.82	0.84	0.89	0.94	1.02	1.11	1.19	1.28	1.53	1.79	2.56	3.35
15.5	0.84	0.87	0.92	0.97	1.05	1.14	1.23	1.32	1.58	1.85	2.64	3.46
16.0	0.87	0.90	0.95	1.00	1.08	1.18	1.27	1.37	1.63	1.91	2.73	3.58
Nominal Diameter of Pipe Being Supported — Schedule 40 Steel												
Span (ft)	**1**	**1.25**	**1.5**	**2**	**2.5**	**3**	**3.5**	**4**	**5**	**6**	**8**	**10**
1.5	0.08	0.09	0.09	0.1	0.11	0.12	0.14	0.15	0.18	0.22	0.30	0.41
2.0	0.11	0.11	0.12	0.13	0.15	0.16	0.18	0.20	0.24	0.29	0.40	0.55
2.5	0.14	0.14	0.15	0.16	0.17	0.18	0.20	0.21	0.25	0.30	0.43	0.56
3.0	0.16	0.17	0.18	0.20	0.22	0.25	0.27	0.30	0.36	0.43	0.60	0.82
3.5	0.19	0.20	0.21	0.23	0.26	0.29	0.32	0.35	0.42	0.51	0.70	0.96
4.0	0.22	0.23	0.24	0.26	0.29	0.33	0.36	0.40	0.48	0.58	0.80	1.10
4.5	0.25	0.26	0.27	0.29	0.33	0.37	0.41	0.45	0.54	0.65	0.90	1.23
5.0	0.27	0.29	0.30	0.33	0.37	0.41	0.45	0.49	0.60	0.72	1.00	1.37
5.5	0.30	0.31	0.33	0.36	0.40	0.45	0.50	0.54	0.66	0.79	1.10	1.51
6.0	0.33	0.34	0.36	0.39	0.44	0.49	0.54	0.59	0.72	0.87	1.20	1.64
6.5	0.36	0.37	0.40	0.42	0.48	0.54	0.59	0.64	0.78	0.94	1.31	1.78
7.0	0.38	0.40	0.43	0.46	0.52	0.58	0.63	0.69	0.84	1.01	1.41	1.92
7.5	0.41	0.43	0.46	0.49	0.55	0.62	0.68	0.74	0.90	1.08	1.51	2.06
8.0	0.44	0.46	0.49	0.52	0.59	0.66	0.72	0.79	0.96	1.16	1.61	2.19
8.5	0.47	0.48	0.52	0.56	0.63	0.70	0.77	0.84	1.02	1.23	1.71	2.33
9.0	0.49	0.51	0.55	0.59	0.66	0.74	0.81	0.89	1.08	1.30	1.81	2.47
9.5	0.52	0.54	0.58	0.62	0.70	0.78	0.86	0.94	1.14	1.37	1.91	2.60
10.0	0.55	0.57	0.61	0.65	0.74	0.82	0.90	0.99	1.20	1.45	2.01	2.74
10.5	0.58	0.60	0.64	0.69	0.77	0.86	0.95	1.04	1.26	1.52	2.11	2.88
11.0	0.60	0.63	0.67	0.72	0.81	0.91	0.99	1.09	1.32	1.59	2.21	3.01
11.5	0.63	0.66	0.70	0.75	0.85	0.95	1.04	1.14	1.38	1.66	2.31	3.15
12.0	0.66	0.68	0.73	0.78	0.88	0.99	1.08	1.19	1.44	1.73	2.41	3.29
12.5	0.69	0.71	0.76	0.82	0.92	1.03	1.13	1.24	1.5	1.81	2.51	3.43
13.0	0.71	0.74	0.79	0.85	0.96	1.07	1.17	1.29	1.56	1.88	2.61	3.56
13.5	0.74	0.77	0.82	0.88	0.99	1.11	1.22	1.34	1.62	1.95	2.71	3.70
14.0	0.77	0.80	0.85	0.91	1.03	1.15	1.26	1.39	1.68	2.02	2.81	3.84
14.5	0.80	0.83	0.88	0.95	1.07	1.19	1.31	1.43	1.74	2.1	2.91	3.97
15.0	0.82	0.86	0.91	0.98	1.10	1.24	1.35	1.48	1.8	2.17	3.01	4.11
15.5	0.85	0.88	0.94	1.01	1.14	1.28	1.4	1.53	1.86	2.24	3.11	4.25
16.0	0.88	0.91	0.97	1.05	1.18	1.32	1.44	1.58	1.92	2.31	3.21	4.39

Copyright 2014 National Fire Protection Association (NFPA). Licensed, by agreement, for individual use and download on October 4, 2014 to LEADER and READER for designated user PATTARAPORN SRITRAKOOL. No other reproduction or transmission in any form permitted without written permission of NFPA. For inquires or to report unauthorized use, contact licensing@nfpa.org.

Table 9.1.1.7.1(b) Available Section Modulus of Common Trapeze Hangers (in.^{3})

Pipe		Modulus		
in.	mm	(in.^{3})	Angles (in.)	Modulus (in.^{3})
Schedule 10				
1	25	0.12	1½ × 1½ × 3⁄16	0.10
1¼	32	0.19	2 × 2 × ⅛	0.13
1½	40	0.26	2 × 1½ × 3⁄16	0.18
2	50	0.42	2 × 2 × 3⁄16	0.19
2½	65	0.69	2 × 2 × ¼	0.25
3	80	1.04	2½ × 1½ × 3⁄16	0.28
3½	90	1.38	2½ × 2 × 3⁄16	0.29
4	100	1.76	2 × 2 × 5⁄16	0.30
5	125	3.03	2½ × 2½ × 3⁄16	0.30
6	150	4.35	2 × 2 × ⅜	0.35
			2½ × 2½ × ¼	0.39
			3 × 2 × 3⁄16	0.41
Schedule 40				
1	25	0.13	3 × 2½ × 3⁄16	0.43
1¼	32	0.23	3 × 3 × 3⁄16	0.44
1½	40	0.33	2½ × 2½ × 5⁄16	0.48
2	50	0.56	3 × 2 × ¼	0.54
2½	65	1.06	2½ × 2 × ⅜	0.55
3	80	1.72	2½ × 2½ × ⅜	0.57
3½	90	2.39	3 × 3 × ¼	0.58
4	100	3.21	3 × 3 × 5⁄16	0.71
5	125	5.45	2½ × 2½ × ½	0.72
6	150	8.50	3½ × 2½ × ¼	0.75
			3 × 2½ × ⅜	0.81
			3 × 3 × ⅜	0.83
			3½ × 2½ × 5⁄16	0.93
			3 × 3 × 7⁄16	0.95
			4 × 4 × ¼	1.05
			3 × 3 × ½	1.07
			4 × 3 × 5⁄16	1.23
			4 × 4 × 5⁄16	1.29
			4 × 3 × ⅜	1.46
			4 ×4 × ⅜	1.52
			5 × 3½ × 5⁄16	1.94
			4 × 4 × ½	1.97
			4 × 4 × 5⁄8	2.40
			4 × 4 × ¾	2.81
			6 × 4 × ⅜	3.32
			6 × 4 × ½	4.33
			6 × 4 × ¾	6.25
			6 × 6 × 1	8.57

For SI units, 1 in. = 25.4 mm; 1 ft = 0.3048 m.

9.1.1.7.2 Any other sizes or shapes giving equal or greater section modulus shall be acceptable.

9.1.1.7.3 All angles shall be installed with the longer leg vertical.

9.1.1.7.4 The trapeze member shall be secured to prevent slippage.

9.1.1.7.5* All components of each hanger assembly that attach to a trapeze member shall conform to 9.1.1.5 and be sized to support the suspended sprinkler pipe.

9.1.1.7.6 The ring, strap, or clevis installed on a pipe trapeze shall be manufactured to fit the pipe size of the trapeze member.

9.1.1.7.7 Holes for bolts shall not exceed 1⁄16 in. (1.6 mm) greater than the diameter of the bolt.

9.1.1.7.8 Bolts shall be provided with a flat washer and nut.

9.1.1.8 Support of Non-System Components.

9.1.1.8.1* Sprinkler piping or hangers shall not be used to support non-system components.

9.1.1.8.2 Sprinkler piping shall be permitted to utilize shared support structures in accordance with 9.1.1.3.

9.1.2 Hanger Rods.

9.1.2.1 Unless the requirements of 9.1.2.2 are met, hanger rod size shall be the same as that approved for use with the hanger assembly, and the size of rods shall not be less than that given in Table 9.1.2.1.

Table 9.1.2.1 Hanger Rod Sizes

Pipe Size		Diameter of Rod	
in.	mm	in.	mm
Up to and including 4	100	⅜	9.5
5	125	½	12.7
6	150		
8	200		
10	250	⅝	15.9
12	300		

9.1.2.2 Rods of smaller diameters than indicated in Table 9.1.2.1 shall be permitted where the hanger assembly has been tested and listed by a testing laboratory and installed within the limits of pipe sizes expressed in individual listings.

9.1.2.3 Where the pitch of the branch line is 6 in 12 or greater, a reduction in the lateral loading on branch line hanger rods shall be done by one of the following:

(1)*Second hanger installed in addition to the required main hangers
(2) Lateral sway brace assemblies on the mains
(3) Branch line hangers utilizing an articulating structural attachment
(4) Equivalent means providing support to the branch line hanger rods

9.1.2.4 U-Hooks. The size of the rod material of U-hooks shall not be less than that given in Table 9.1.2.4.

9.1.2.5 Eye Rods.

9.1.2.5.1 The size of the rod material for eye rods shall not be less than specified in Table 9.1.2.5.1.

9.1.2.5.2 Eye rods shall be secured with lock washers to prevent lateral motion.

9.1.2.5.3 Where eye rods are fastened to wood structural members, the eye rod shall be backed with a large flat washer

Copyright 2014 National Fire Protection Association (NFPA). Licensed, by agreement, for individual use and download on October 4, 2014 to LEADER and READER for designated user PATTARAPORN SRITRAKOOL. No other reproduction or transmission in any form permitted without written permission of NFPA. For inquires or to report unauthorized use, contact licensing@nfpa.org.

Table 9.1.2.4 U-Hook Rod Sizes

Pipe Size		Hook Material Diameter	
in.	mm	in.	mm
Up to and including 2	50	5/16	7.9
2½ to 6	65 to 150	3/8	9.5
8	200	½	12.7

Table 9.1.2.5.1 Eye Rod Sizes

Pipe Size		Diameter of Rod			
		With Bent Eye		With Welded Eye	
in.	mm	in.	mm	in.	mm
Up to and including 4	100	3/8	9.5	3/8	9.5
5	125	½	12.7	½	12.7
6	150	½	12.7	½	12.7
8	200	¾	19.1	½	12.7

bearing directly against the structural member, in addition to the lock washer.

9.1.2.6 Threaded Sections of Rods. Threaded sections of rods shall not be formed or bent.

9.1.3* Fasteners in Concrete.

9.1.3.1 Unless prohibited by 9.1.3.2 or 9.1.3.3, the use of listed inserts set in concrete and listed post-installed anchors to support hangers shall be permitted for mains and branch lines.

9.1.3.2 Post-installed anchors shall not be used in cinder concrete, except for branch lines where the post-installed anchors are alternated with through-bolts or hangers attached to beams.

9.1.3.3 Post-installed anchors shall not be used in ceilings of gypsum or other similar soft material.

9.1.3.4 Unless the requirements of 9.1.3.5 are met, post-installed anchors shall be installed in a horizontal position in the sides of concrete beams.

9.1.3.5 Post-installed anchors shall be permitted to be installed in the vertical position under any of the following conditions:

(1) When used in concrete having gravel or crushed stone aggregate to support pipes 4 in. (100 mm) or less in diameter
(2) When post-installed anchors are alternated with hangers connected directly to the structural members, such as trusses and girders, or to the sides of concrete beams [to support pipe 5 in. (125 mm) or larger]
(3) When post-installed anchors are spaced not over 10 ft (3 m) apart [to support pipe 4 in. (100 mm) or larger]

9.1.3.6 Holes for post-installed anchors in the side of beams shall be above the centerline of the beam or above the bottom reinforcement steel rods.

9.1.3.7 Holes for post-installed anchors used in the vertical position shall be drilled to provide uniform contact with the shield over its entire circumference.

9.1.3.8 The depth of the post-installed anchor hole shall not be less than specified for the type of shield used.

9.1.3.9 Powder-Driven Studs.

9.1.3.9.1 Powder-driven studs, welding studs, and the tools used for installing these devices shall be listed.

9.1.3.9.2 Pipe size, installation position, and construction material into which they are installed shall be in accordance with individual listings.

9.1.3.9.3* Representative samples of concrete into which studs are to be driven shall be tested to determine that the studs will hold a minimum load of 750 lb (341 kg) for 2 in. (50 mm) or smaller pipe; 1000 lb (454 kg) for 2½ in., 3 in., or 3½ in. (65 mm, 80 mm, or 90 mm) pipe; and 1200 lb (545 kg) for 4 in. or 5 in. (100 mm or 125 mm) pipe.

9.1.3.9.4 Increaser couplings shall be attached directly to the powder-driven studs.

9.1.3.10 Minimum Bolt Size for Concrete.

9.1.3.10.1 The size of a bolt used with a hanger and installed through concrete shall not be less than specified in Table 9.1.3.10.1.

Table 9.1.3.10.1 Minimum Bolt Size for Concrete

Pipe Size		Size of Bolt	
in.	mm	in.	mm
Up to and including 4	100	3/8	10
5 6 8	125 150 200	½	13
10	250	5/8	15
12	300	¾	20

9.1.3.10.2 Holes for bolts shall not exceed 1/16 in. (1.6 mm) greater than the diameter of the bolt.

9.1.3.10.3 Bolts shall be provided with a flat washer and nut.

9.1.4 Fasteners in Steel.

9.1.4.1* Powder-driven studs, welding studs, and the tools used for installing these devices shall be listed.

9.1.4.2 Pipe size, installation position, and construction material into which they are installed shall be in accordance with individual listings.

9.1.4.3 Increaser couplings shall be attached directly to the powder-driven studs or welding studs.

9.1.4.4 Welding studs or other hanger parts shall not be attached by welding to steel less than U.S. Standard, 12 gauge (2.78 mm).

Copyright 2014 National Fire Protection Association (NFPA). Licensed, by agreement, for individual use and download on October 4, 2014 to LEADER and READER for designated user PATTARAPORN SRITRAKOOL. No other reproduction or transmission in any form permitted without written permission of NFPA. For inquires or to report unauthorized use, contact licensing@nfpa.org.

9.1.4.5 Minimum Bolt Size for Steel.

9.1.4.5.1 The size of a bolt used with a hanger and installed through steel shall not be less than specified in Table 9.1.4.5.1.

Table 9.1.4.5.1 Minimum Bolt Size for Steel

Pipe Size		Size of Bolt	
in.	mm	in.	mm
Up to and including 4	100	⅜	10
5	125	½	12
6	150		
8	200		
10	250	⅝	15
12	300	¾	20

9.1.4.5.2 Holes for bolts shall not exceed 1⁄16 in. (1.6 mm) greater than the diameter of the bolt.

9.1.4.5.3 Bolts shall be provided with a flat washer and nut.

9.1.5 Fasteners in Wood.

9.1.5.1 Drive Screws.

9.1.5.1.1 Drive screws shall be used only in a horizontal position as in the side of a beam and only for 2 in. (50 mm) or smaller pipe.

9.1.5.1.2 Drive screws shall only be used in conjunction with hangers that require two points of attachments.

9.1.5.2 Ceiling Flanges and U-Hooks with Screws.

9.1.5.2.1 Unless the requirements of 9.1.5.2.2 or 9.1.5.2.3 are met, for ceiling flanges and U-hooks, screw dimensions shall not be less than those given in Table 9.1.5.2.1.

9.1.5.2.2 When the thickness of planking and thickness of flange do not permit the use of screws 2 in. (50 mm) long, screws 1¾ in. (45 mm) long shall be permitted with hangers spaced not over 10 ft (3 m) apart.

9.1.5.2.3 When the thickness of beams or joists does not permit the use of screws 2½ in. (60 mm) long, screws 2 in. (50 mm) long shall be permitted with hangers spaced not over 10 ft (3 m) apart.

9.1.5.3 Bolt or Lag Screw.

9.1.5.3.1 Unless the requirements of 9.1.5.3.2 are met, the size of bolt or lag screw used with a hanger and installed on the side of the beam shall not be less than specified in Table 9.1.5.3.1.

9.1.5.3.2 Where the thickness of beams or joists does not permit the use of screws 2½ in. (64 mm) long, screws 2 in. (50 mm) long shall be permitted with hangers spaced not over 10 ft (3 m) apart.

9.1.5.3.3 All holes for lag screws shall be pre-drilled ⅛ in. (3.2 mm) less in diameter than the maximum root diameter of the lag screw thread.

Table 9.1.5.2.1 Screw Dimensions for Ceiling Flanges and U-Hooks

Pipe Size		
in.	mm	Two Screw Ceiling Flanges
Up to and including 2	50	Wood screw No. 18 × 1½ in. or Lag screw 5⁄16 in. × 1½ in.
		Three Screw Ceiling Flanges
Up to and including 2	50	Wood screw No. 18 × 1½ in.
2½	65	Lag screw ⅜ in. × 2 in.
3	80	
3½	90	
4	100	Lag screw ½ in. × 2 in.
5	125	
6	150	
8	200	Lag screw ⅝ in. × 2 in.
		Four Screw Ceiling Flanges
Up to and including 2	50	Wood screw No. 18 × 1½ in.
2½	65	Lag screw ⅜ in. × 1½ in.
3	80	
3½	90	
4	100	Lag screw ½ in. × 2 in.
5	125	
6	150	
8	200	Lag screw ⅝ in. × 2 in.
		U-Hooks
Up to and including 2	50	Drive screw No. 16 × 2 in.
2½	65	Lag screw ⅜ in. × 2½ in.
3	80	
3½	90	
4	100	Lag screw ½ in. × 3 in.
5	125	
6	150	
8	200	Lag screw ⅝ in. × 3 in.

9.1.5.3.4 Holes for bolts shall not exceed 1⁄16 in. (1.6 mm) greater than the diameter of the bolt.

9.1.5.3.5 Bolts shall be provided with a flat washer and nut.

9.1.5.4 Wood Screws. Wood screws shall be installed with a screwdriver.

9.1.5.5 Nails. Nails shall not be acceptable for fastening hangers.

Copyright 2014 National Fire Protection Association (NFPA). Licensed, by agreement, for individual use and download on October 4, 2014 to LEADER and READER for designated user PATTARAPORN SRITRAKOOL. No other reproduction or transmission in any form permitted without written permission of NFPA. For inquires or to report unauthorized use, contact licensing@nfpa.org.

Table 9.1.5.3.1 Minimum Bolt or Lag Screw Sizes for Side of Beam Installation

Pipe Size		Size of Bolt or Lag Screw		Length of Lag Screw Used with Wood Beams	
in.	mm	in.	mm	in.	mm
Up to and including 2	50	⅜	10	2½	64
2½ to 6 (inclusive)	65 to 150	½	12	3	76
8	200	⅝	15	3	76

9.1.5.6 Screws in Side of Timber or Joists.

9.1.5.6.1 Screws in the side of a timber or joist shall be not less than 2½ in. (64 mm) from the lower edge where supporting branch lines and not less than 3 in. (76 mm) where supporting main lines.

9.1.5.6.2 The requirements of 9.1.5.6.1 shall not apply to 2 in. (51 mm) or thicker nailing strips resting on top of steel beams.

9.1.5.7 Coach Screw Rods.

9.1.5.7.1 Minimum Coach Screw Rod Size. The size of coach screw rods shall not be less than the requirements of Table 9.1.5.7.1.

Table 9.1.5.7.1 Minimum Coach Screw Rod Size

Pipe Size		Diameter of Rod		Minimum Penetration	
in.	mm	in.	mm	in.	mm
Up to and including 4	100	⅜	10	3	76
Larger than 4	100	NP	NP	NP	NP

NP: Not permitted.

9.1.5.7.2 The minimum plank thickness and the minimum width of the lower face of beams or joists in which coach screw rods are used shall be not less than that specified in Table 9.1.5.7.2.

9.1.5.7.3 Coach screw rods shall not be used for support of pipes larger than 4 in. (100 mm) in diameter.

9.1.5.7.4 All holes for coach screw rods shall be predrilled ⅛ in. (3.2 mm) less in diameter than the maximum root diameter of the wood screw thread.

9.2* Installation of Pipe Hangers.

9.2.1 General.

9.2.1.1 Ceiling Sheathing.

9.2.1.1.1* Unless the requirements of 9.2.1.1.2 are met, sprinkler piping shall be supported independently of the ceiling sheathing.

Table 9.1.5.7.2 Minimum Plank Thicknesses and Beam or Joist Widths

Pipe Size		Nominal Plank Thickness		Nominal Width of Beam or Joist Face	
in.	mm	in.	mm	in.	mm
Up to and including 2	50	3	76	2	50
2½	65	4	102	2	50
3	80				
3½	90				
4	100	4	102	3	76

9.2.1.1.2 Toggle hangers shall be permitted only for the support of pipe 1½ in. (40 mm) or smaller in size under ceilings of hollow tile or metal lath and plaster.

9.2.1.2 Storage Racks. Where sprinkler piping is installed in storage racks, piping shall be supported from the storage rack structure or building in accordance with all applicable provisions of Sections 9.2 and 9.3.

9.2.1.3* Building Structure.

9.2.1.3.1 Unless the requirements of 9.2.1.3.3 apply, sprinkler piping shall be substantially supported from the building structure, which must support the added load of the water-filled pipe plus a minimum of 250 lb (114 kg) applied at the point of hanging, except where permitted by 9.2.1.1.2, 9.2.1.3.3, and 9.2.1.4.1.

9.2.1.3.2 Trapeze hangers shall be used where necessary to transfer loads to appropriate structural members.

9.2.1.3.3* Flexible Sprinkler Hose Fittings.

9.2.1.3.3.1 Listed flexible sprinkler hose fittings and their anchoring components intended for use in installations connecting the sprinkler system piping to sprinklers shall be installed in accordance with the requirements of the listing, including any installation instructions.

9.2.1.3.3.2 When installed and supported by suspended ceilings, the ceiling shall meet ASTM C 635, *Standard Specification for the Manufacture, Performance, and Testing of Metal Suspension Systems for Acoustical Tile and Lay-In Panel Ceilings*, and shall be installed in accordance with ASTM C 636, *Standard Practice for Installation of Metal Ceiling Suspension Systems for Acoustical Tile and Lay-In Panels*.

9.2.1.3.3.3* Where flexible sprinkler hose fittings exceed 6 ft (1.83 m) in length and are supported by a suspended ceiling in accordance with 9.2.1.3.3.2, a hanger(s) attached to the structure shall be required to ensure that the maximum unsupported length does not exceed 6 ft (1.83 m).

9.2.1.3.3.4* Where flexible sprinkler hose fittings are used to connect sprinklers to branch lines in suspended ceilings, a label limiting relocation of the sprinkler shall be provided on the anchoring component.

Copyright 2014 National Fire Protection Association (NFPA). Licensed, by agreement, for individual use and download on October 4, 2014 to LEADER and READER for designated user PATTARAPORN SRITRAKOOL. No other reproduction or transmission in any form permitted without written permission of NFPA. For inquires or to report unauthorized use, contact licensing@nfpa.org.

9.2.1.4 Metal Deck.

9.2.1.4.1* Branch line hangers attached to metal deck shall be permitted only for the support of pipe 1 in. (25 mm) or smaller in size, by drilling or punching the vertical portion of the metal deck and using through bolts.

9.2.1.4.2 The distance from the bottom of the bolt hole to the bottom of the vertical member shall be not less than ⅜ in. (9.5 mm).

9.2.1.5 Where sprinkler piping is installed below ductwork, piping shall be supported from the building structure or from the ductwork supports, provided such supports are capable of handling both the load of the ductwork and the load specified in 9.2.1.3.1.

9.2.2* Maximum Distance Between Hangers.

9.2.2.1 The maximum distance between hangers shall not exceed that specified in Table 9.2.2.1(a) or Table 9.2.2.1(b), except where the provisions of 9.2.4 apply.

9.2.2.2 The maximum distance between hangers for listed nonmetallic pipe shall be modified as specified in the individual product listings.

9.2.3 Location of Hangers on Branch Lines.

9.2.3.1 Subsection 9.2.3 shall apply to the support of steel pipe or copper tube as specified in 6.3.1 and subject to the provisions of 9.2.2.

9.2.3.2* Minimum Number of Hangers.

9.2.3.2.1 Unless the requirements of 9.2.3.2.2 through 9.2.3.2.5 are met, there shall be not less than one hanger for each section of pipe.

9.2.3.2.2* Unless the requirements of 9.2.3.2.3 are met, where sprinklers are spaced less than 6 ft (1.8 m) apart, hangers spaced up to a maximum of 12 ft (3.7 m) shall be permitted.

9.2.3.2.3 For welded or mechanical outlets on a continuous section of pipe, hanger spacing shall be according to Table 9.2.2.1(a) or Table 9.2.2.1(b).

9.2.3.2.4* Starter lengths less than 6 ft (1.8 m) shall not require a hanger, unless on the end line of a sidefeed system or where an intermediate cross main hanger has been omitted.

9.2.3.2.5* A single section of pipe shall not require a hanger when the cumulative distance between hangers on the branch line does not exceed the spacing required by Table 9.2.2.1(a) and Table 9.2.2.1(b).

9.2.3.3 Clearance to Hangers. The distance between a hanger and the centerline of an upright sprinkler shall not be less than 3 in. (76 mm).

9.2.3.4* Unsupported Lengths.

9.2.3.4.1 For steel pipe, the unsupported horizontal length between the end sprinkler and the last hanger on the line shall not be greater than 36 in. (0.9 m) for 1 in. (25 mm) pipe, 48 in. (1.2 m) for 1¼ in. (32 mm) pipe, and 60 in. (1.5 m) for 1½ in. (40 mm) or larger pipe.

Table 9.2.2.1(a) Maximum Distance Between Hangers (ft-in.)

	Nominal Pipe Size (in.)											
	¾	1	1¼	1½	2	2½	3	3½	4	5	6	8
Steel pipe except threaded lightwall	NA	12-0	12-0	15-0	15-0	15-0	15-0	15-0	15-0	15-0	15-0	15-0
Threaded lightwall steel pipe	NA	12-0	12-0	12-0	12-0	12-0	12-0	NA	NA	NA	NA	NA
Copper tube	8-0	8-0	10-0	10-0	12-0	12-0	12-0	15-0	15-0	15-0	15-0	15-0
CPVC	5-6	6-0	6-6	7-0	8-0	9-0	10-0	NA	NA	NA	NA	NA
Ductile-iron pipe	NA	NA	NA	NA	NA	NA	15-0	NA	15-0	NA	15-0	15-0

NA: Not applicable.

Table 9.2.2.1(b) Maximum Distance Between Hangers (m-mm)

	Nominal Pipe Size (mm)											
	20	25	32	40	50	65	80	90	100	125	150	200
Steel pipe except threaded lightwall	NA	3.66	3.66	4.57	4.57	4.57	4.57	4.57	4.57	4.57	4.57	4.57
Threaded lightwall steel pipe	NA	3.66	3.66	3.66	3.66	3.66	3.66	NA	NA	NA	NA	NA
Copper tube	2.44	2.44	3.05	3.05	3.66	3.66	3.66	4.57	4.57	4.57	4.57	4.57
CPVC	1.68	1.83	1.98	2.13	2.44	2.74	3.05	NA	NA	NA	NA	NA
Ductile-iron pipe	NA	NA	NA	NA	NA	NA	4.57	NA	4.57	NA	4.57	4.57

NA: Not applicable.

Copyright 2014 National Fire Protection Association (NFPA). Licensed, by agreement, for individual use and download on October 4, 2014 to LEADER and READER for designated user PATTARAPORN SRITRAKOOL. No other reproduction or transmission in any form permitted without written permission of NFPA. For inquires or to report unauthorized use, contact licensing@nfpa.org.

9.2.3.4.2 For copper tube, the unsupported horizontal length between the end sprinkler and the last hanger on the line shall not be greater than 18 in. (457 mm) for 1 in. (25 mm) pipe, 24 in. (610 mm) for 1¼ in. (32 mm) pipe, and 30 in. (762 mm) for 1½ in. (40 mm) or larger pipe.

9.2.3.4.3 Where the limits of 9.2.3.4.1 and 9.2.3.4.2 are exceeded, the pipe shall be extended beyond the end sprinkler and shall be supported by an additional hanger.

9.2.3.4.4* Unsupported Length with Maximum Pressure Exceeding 100 psi (6.9 bar) and Branch Line Above Ceiling Supplying Sprinklers in Pendent Position Below Ceiling.

9.2.3.4.4.1 Where the maximum static or flowing pressure, whichever is greater at the sprinkler, applied other than through the fire department connection, exceeds 100 psi (6.9 bar) and a branch line above a ceiling supplies sprinklers in a pendent position below the ceiling, the hanger assembly supporting the pipe supplying an end sprinkler in a pendent position shall be of a type that prevents upward movement of the pipe.

9.2.3.4.4.2 The unsupported length between the end sprinkler in a pendent position or drop nipple and the last hanger on the branch line shall not be greater than 12 in. (305 mm) for steel pipe or 6 in. (152 mm) for copper pipe.

9.2.3.4.4.3 When the limit of 9.2.3.4.4.2 is exceeded, the pipe shall be extended beyond the end sprinkler and supported by an additional hanger.

9.2.3.4.4.4 The hanger closest to the sprinkler shall be of a type that prevents upward movement of the pipe.

9.2.3.5* Unsupported Armover Length.

9.2.3.5.1 The cumulative horizontal length of an unsupported armover to a sprinkler, sprinkler drop, or sprig shall not exceed 24 in. (610 mm) for steel pipe or 12 in. (305 mm) for copper tube.

9.2.3.5.2* Unsupported Armover Length with Maximum Pressure Exceeding 100 psi (6.9 bar) and Branch Line Above Ceiling Supplying Sprinklers in Pendent Position Below Ceiling.

9.2.3.5.2.1 Where the maximum static or flowing pressure, whichever is greater at the sprinkler, applied other than through the fire department connection, exceeds 100 psi (6.9 bar) and a branch line above a ceiling supplies sprinklers in a pendent position below the ceiling, the cumulative horizontal length of an unsupported armover to a sprinkler or sprinkler drop shall not exceed 12 in. (305 mm) for steel pipe and 6 in. (152 mm) for copper tube.

9.2.3.5.2.2 The hanger closest to the sprinkler shall be of a type that prevents upward movement of the pipe.

9.2.3.6* Wall-mounted sidewall sprinklers shall be restrained to prevent movement.

9.2.3.7 Sprigs. Sprigs 4 ft (1.2 m) or longer shall be restrained against lateral movement.

9.2.4 Location of Hangers on Mains.

9.2.4.1 Unless the requirements of 9.2.4.2, 9.2.4.3, 9.2.4.4, 9.2.4.5, or 9.2.4.6 are met, hangers for mains shall be in accordance with 9.2.2, between each branch line, or on each section of pipe, whichever is the lesser dimension.

9.2.4.2 For welded or mechanical outlets on a continuous section of pipe, hanger spacing shall be according to Table 9.2.2.1(a) or Table 9.2.2.1(b).

9.2.4.3 For cross mains in steel pipe systems in bays having two branch lines, the intermediate hanger shall be permitted to be omitted, provided that a hanger attached to a purlin is installed on each branch line located as near to the cross main as the location of the purlin permits.

9.2.4.3.1 The remaining branch line hangers shall be installed in accordance with 9.2.3.

9.2.4.4 For cross mains in steel pipe systems only in bays having three branch lines, either side or center feed, one (only) intermediate hanger shall be permitted to be omitted, provided that a hanger attached to a purlin is installed on each branch line located as near to the cross main as the location of the purlin permits.

9.2.4.4.1 The remaining branch line hangers shall be installed in accordance with 9.2.3.

9.2.4.5 For cross mains in steel pipe systems only in bays having four or more branch lines, either side or center feed, two intermediate hangers shall be permitted to be omitted, provided the maximum distance between hangers does not exceed the distances specified in 9.2.2 and a hanger attached to a purlin on each branch line is located as near to the cross main as the purlin permits.

9.2.4.6 At the end of the main, intermediate trapeze hangers shall be installed unless the main is extended to the next framing member with a hanger installed at this point, in which event an intermediate hanger shall be permitted to be omitted in accordance with 9.2.4.3, 9.2.4.4, and 9.2.4.5.

9.2.4.7* A single section of pipe shall not require a hanger when the cumulative distance between hangers on the main does not exceed the spacing required by Table 9.2.2.1(a) and Table 9.2.2.1(b).

9.2.5 Support of Risers.

9.2.5.1 Risers shall be supported by riser clamps or by hangers located on the horizontal connections within 24 in. (610 mm) of the centerline of the riser.

9.2.5.2 Riser clamps supporting risers by means of set screws shall not be used.

9.2.5.3* Riser clamps anchored to walls using hanger rods in the horizontal position shall not be permitted to vertically support risers.

9.2.5.4 Multistory Buildings.

9.2.5.4.1 In multistory buildings, riser supports shall be provided at the lowest level, at each alternate level above, above and below offsets, and at the top of the riser.

9.2.5.4.2* Supports above the lowest level shall also restrain the pipe to prevent movement by an upward thrust where flexible fittings are used.

9.2.5.4.3 Where risers are supported from the ground, the ground support shall constitute the first level of riser support.

9.2.5.4.4 Where risers are offset or do not rise from the ground, the first ceiling level above the offset shall constitute the first level of riser support.

9.2.5.5 Distance between supports for risers shall not exceed 25 ft (7.6 m).

Copyright 2014 National Fire Protection Association (NFPA). Licensed, by agreement, for individual use and download on October 4, 2014 to LEADER and READER for designated user PATTARAPORN SRITRAKOOL. No other reproduction or transmission in any form permitted without written permission of NFPA. For inquires or to report unauthorized use, contact licensing@nfpa.org.

9.2.6* Pipe Stands.

9.2.6.1 Pipe stands shall be sized to support a minimum of five times the weight of the water-filled pipe plus 250 lb (114 kg).

9.2.6.2 The pipe stand base shall be secured by an approved method.

9.2.6.3 Where pipe stands are utilized, they shall be approved.

9.3 Protection of Piping Against Damage Where Subject to Earthquakes.

9.3.1* General.

9.3.1.1 Where water-based fire protection systems are required to be protected against damage from earthquakes, the requirements of Section 9.3 shall apply, unless the requirements of 9.3.1.2 are met.

9.3.1.2 Alternative methods of providing earthquake protection of sprinkler systems based on a seismic analysis certified by a registered professional engineer such that system performance will be at least equal to that of the building structure under expected seismic forces shall be permitted.

9.3.1.3 Obstructions to Sprinklers. Braces and restraints shall not obstruct sprinklers and shall comply with the obstruction rules of Chapter 8.

9.3.2* Couplings.

9.3.2.1 Listed flexible pipe couplings joining grooved end pipe shall be provided as flexure joints to allow individual sections of piping 2½ in. (65 mm) or larger to move differentially with the individual sections of the building to which it is attached.

9.3.2.2 Couplings shall be arranged to coincide with structural separations within a building.

9.3.2.3 Systems having more flexible couplings than required by this section shall be provided with additional sway bracing as required in 9.3.5.5.9.

9.3.2.3.1 The flexible couplings shall be installed as follows:

(1)*Within 24 in. (610 mm) of the top and bottom of all risers, unless the following provisions are met:
   (a) In risers less than 3 ft (0.9 m) in length, flexible couplings are permitted to be omitted.
   (b) In risers 3 ft to 7 ft (0.9 m to 2.1 m) in length, one flexible coupling is adequate.
(2) Within 12 in. (305 mm) above and within 24 in. (610 mm) below the floor in multistory buildings
(3) On both sides of concrete or masonry walls within 1 ft (305 mm) of the wall surface, unless clearance is provided in accordance with 9.3.4
(4)*Within 24 in. (610 mm) of building expansion joints
(5) Within 24 in. (610 mm) of the top of drops exceeding 15 ft (4.6 m) in length to portions of systems supplying more than one sprinkler, regardless of pipe size
(6) Within 24 in. (610 mm) above and 24 in. (610 mm) below any intermediate points of support for a riser or other vertical pipe

9.3.2.3.2 When the flexible coupling below the floor is above the tie-in main to the main supplying that floor, a flexible coupling shall be provided in accordance with one of the following:

(1)*On the horizontal portion within 24 in. (610 mm) of the tie-in where the tie-in is horizontal
(2)*On the vertical portion of the tie-in where the tie-in incorporates a riser

9.3.2.4* Flexible Couplings for Drops. Flexible couplings for drops to hose lines, rack sprinklers, mezzanines, and free-standing structures shall be installed regardless of pipe sizes as follows:

(1) Within 24 in. (610 mm) of the top of the drop
(2) Within 24 in. (610 mm) above the uppermost drop support attachment, where drop supports are provided to the structure, rack, or mezzanine
(3) Within 24 in. (610 mm) above the bottom of the drop where no additional drop support is provided

9.3.3* Seismic Separation Assembly.

9.3.3.1 An approved seismic separation assembly shall be installed where sprinkler piping, regardless of size, crosses building seismic separation joints at ground level and above.

9.3.3.2 Seismic separation assemblies shall consist of flexible fittings or flexible piping so as to allow movement sufficient to accommodate closing of the separation, opening of the separation to twice its normal size, and movement relative to the separation in the other two dimensions in an amount equal to the separation distance.

9.3.3.3* The seismic separation assembly shall include a four-way brace upstream and downstream within 6 ft (1.8 m) of the seismic separation assembly.

9.3.3.4 Bracing shall not be attached to the seismic separation assembly.

9.3.4* Clearance.

9.3.4.1 Clearance shall be provided around all piping extending through walls, floors, platforms, and foundations, including drains, fire department connections, and other auxiliary piping.

9.3.4.2 Unless the requirements of 9.3.4.3 through 9.3.4.7 are met, where pipe passes through holes in platforms, foundations, walls, or floors, the holes shall be sized such that the diameter of the holes is nominally 2 in. (50 mm) larger than the pipe for pipe 1 in. (25 mm) nominal to 3½ in. (90 mm) nominal and 4 in. (100 mm) larger than the pipe for pipe 4 in. (100 mm) nominal and larger.

9.3.4.3 Where clearance is provided by a pipe sleeve, a nominal diameter 2 in. (50 mm) larger than the nominal diameter of the pipe shall be acceptable for pipe sizes 1 in. (25 mm) through 3½ in. (90 mm), and the clearance provided by a pipe sleeve of nominal diameter 4 in. (100 mm) larger than the nominal diameter of the pipe shall be acceptable for pipe sizes 4 in. (100 mm) and larger.

9.3.4.4 No clearance shall be required for piping passing through gypsum board or equally frangible construction that is not required to have a fire resistance rating.

9.3.4.5 No clearance shall be required if flexible couplings are located within 1 ft (305 mm) of each side of a wall, floor, platform, or foundation.

9.3.4.6 No clearance shall be required where horizontal piping passes perpendicularly through successive studs or joists that form a wall or floor/ceiling assembly.

9.3.4.7 No clearance shall be required where nonmetallic pipe has been demonstrated to have inherent flexibility equal

Copyright 2014 National Fire Protection Association (NFPA). Licensed, by agreement, for individual use and download on October 4, 2014 to LEADER and READER for designated user PATTARAPORN SRITRAKOOL. No other reproduction or transmission in any form permitted without written permission of NFPA. For inquires or to report unauthorized use, contact licensing@nfpa.org.

to or greater than the minimum provided by flexible couplings located within 1 ft (305 mm) of each side of a wall, floor, platform, or foundation.

9.3.4.8 Where required, the clearance shall be filled with a flexible material that is compatible with the piping material.

9.3.4.9 Clearance from structural members not penetrated or used, collectively or independently, to support the piping shall be at least 2 in. (50 mm).

9.3.4.10 No clearance shall be required where piping is supported by holes through structural members as permitted by 9.1.1.6.3.

9.3.5* Sway Bracing.

9.3.5.1 General.

9.3.5.1.1 The system piping shall be braced to resist both lateral and longitudinal horizontal seismic loads and to prevent vertical motion resulting from seismic loads.

9.3.5.1.2 The structural components to which bracing is attached shall be determined to be capable of resisting the added applied seismic loads.

9.3.5.1.3* Horizontal loads on system piping shall be determined in accordance with 9.3.5.9.

9.3.5.1.4* A shared support structure shall be permitted to support both the gravity loads addressed in 9.1.1.3.1 and the seismic loads addressed in 9.3.5.9.

9.3.5.1.4.1 When a shared support structure is used to support gravity and seismic loads, the structure shall be designed to support these loads for all pipe and distribution systems on the structure using either 9.3.5.9.5 or 9.3.5.9.6 with an importance factor, *Ip*, of 1.5 being applied to all of the distribution systems.

9.3.5.1.5* If a shared support structure is used to support sprinkler pipe and other distribution systems per 9.1.1.3.1 and that structure does not provide seismic resistance as required in 9.3.5.1.4, the following shall be met:

(1) The sprinkler pipe shall be braced using the method in 9.3.5.6 with the zone of influence including the water-filled sprinkler pipe and all other distribution systems that are not independently equipped with seismic protection and attached to the shared support structure.
(2) The sprinkler sway bracing attachment shall be connected to the same building or structure as the shared support structure.

9.3.5.1.6 Bracing requirements of 9.3.5 shall not apply to drain piping downstream of the drain valve.

9.3.5.2 Listing.

9.3.5.2.1 Sway bracing assemblies shall be listed for a maximum load rating, unless the requirements of 9.3.5.2.2 are met.

9.3.5.2.2 Where sway bracing utilizing pipe, angles, flats, or rods as shown in Table 9.3.5.11.8(a), Table 9.3.5.11.8(b), and Table 9.3.5.11.8(c) is used, the components shall not require listing.

9.3.5.2.2.1 Bracing fittings and connections used with those specific materials shall be listed.

9.3.5.2.3 The loads shall be reduced as shown in Table 9.3.5.2.3 for installations where the brace is less than 90 degrees from vertical.

Table 9.3.5.2.3 Allowable Horizontal Load on Brace Assemblies Based on Weakest Component of Brace Assembly

Brace Angle Degrees from Vertical	Allowable Horizontal Load
30 to 44	Listed load rating divided by 2.000
45 to 59	Listed load rating divided by 1.414
60 to 89	Listed load rating divided by 1.155
90	Listed load rating

9.3.5.3 Component Material.

9.3.5.3.1 Unless permitted by 9.3.5.3.2, components of sway brace assemblies shall be ferrous.

9.3.5.3.2 Nonferrous components that have been proven by fire tests to be adequate for the hazard application, that are listed for this purpose, and that are in compliance with the other requirements of this section shall be acceptable.

9.3.5.4 Sway Bracing Design.

9.3.5.4.1 Sway braces shall be designed to withstand forces in tension and compression, unless the requirements of 9.3.5.4.2 are met.

9.3.5.4.2* Tension-only bracing systems shall be permitted for use where listed for this service and where installed in accordance with their listing limitations, including installation instructions.

9.3.5.4.3 For all braces, whether or not listed, the maximum allowable load shall be based on the weakest component of the brace with safety factors.

9.3.5.5 Lateral Sway Bracing.

9.3.5.5.1* Lateral sway bracing shall be provided on all feed and cross mains regardless of size and all branch lines and other piping with a diameter of 2½ in. (65 mm) and larger.

9.3.5.5.1.1 Where branch lines are not provided with lateral sway bracing, they shall be provided with restraint in accordance with 9.3.6.

9.3.5.5.2* Lateral sway bracing shall be in accordance with either Table 9.3.5.5.2(a), (b), (c), (d), or (e), or 9.3.5.5.3, based on the piping material of the sprinkler system.

9.3.5.5.2.1 Specially listed nonstandard pipe shall be permitted using the values in Table 9.3.5.5.2(c) or with values provided by the manufacturer.

9.3.5.5.2.2 Spacing shall not exceed a maximum interval of 40 ft (12.2 m) on center.

9.3.5.5.2.3 The maximum permissible load in the zone of influence of a sway brace shall not exceed the values given in Table 9.3.5.5.2(a) through Table 9.3.5.5.2(e) or the values calculated in accordance with 9.3.5.5.3.

9.3.5.5.3 The maximum load (F_{pw}) in the zone of influence for specially listed pipe shall be calculated. *(See Annex E.)*

9.3.5.5.4 The requirements of 9.3.5.5.1 shall not apply to 2½ in. (65 mm) starter pieces that do not exceed 12 ft (3.66 m) in length.

9.3.5.5.5 The distance between the last brace and the end of the pipe shall not exceed 6 ft (1.8 m).

Copyright 2014 National Fire Protection Association (NFPA). Licensed, by agreement, for individual use and download on October 4, 2014 to LEADER and READER for designated user PATTARAPORN SRITRAKOOL. No other reproduction or transmission in any form permitted without written permission of NFPA. For inquires or to report unauthorized use, contact licensing@nfpa.org.

Table 9.3.5.5.2(a) Maximum Load (F_{pw}) in Zone of Influence (lb), (F_y = 30 ksi) Schedule 10 Steel Pipe

Pipe (in.)	Lateral Sway Brace Spacing (ft)[a]				
	20[b]	25[b]	30[c]	35[c]	40[d]
1	111	89	73	63	52
1¼	176	141	116	99	83
1½	241	193	158	136	114
2	390	312	256	219	183
2½	641	513	420	360	301
3	966	773	633	543	454
3½	1281	1025	840	720	603
4	1634	1307	1071	918	769
5	2814	2251	1844	1581	1324
6 and larger[e]	4039	3231	2647	2269	1900

Note: ASTM A 106 Grade B or ASTM A 53 Grade B has an F_y = 35 ksi. An F_y = 30 ksi was used also as a conservative value to account for differences in material properties as well as other operational stresses.
[a] The tables for the maximum load, F_{pw}, in zone of influence are based on specific configurations of mains and branch lines.
[b] Assumes branch lines at center of pipe span and near each support.
[c] Assumes branch lines at third-points of pipe span and near each support.
[d] Assumes branch lines at quarter-points of pipe span and near each support.
[e] Larger diameter pipe can be used when justified by engineering analysis.

Table 9.3.5.5.2(b) Maximum Load (F_{pw}) in Zone of Influence (lb), (F_y= 30 ksi) Schedule 40 Steel Pipe

Pipe (in.)	Lateral Sway Brace Spacing (ft)[a]				
	20[b]	25[b]	30[c]	35[c]	40[d]
1	121	97	79	68	57
1¼	214	171	140	120	100
1½	306	245	201	172	144
2	520	416	341	292	245
2½	984	787	645	553	463
3	1597	1278	1047	897	751
3½	2219	1775	1455	1247	1044
4	2981	2385	1954	1675	1402
5	5061	4049	3317	2843	2381
6 and larger[e]	7893	6314	5173	4434	3713

Note: ASTM A 106 Grade B or ASTM A 53 Grade B has an F_y = 35 ksi. An F_y = 30 ksi was used also as a conservative value to account for differences in material properties as well as other operational stresses.
[a] The tables for the maximum load, F_{pw}, in zone of influence are based on specific configurations of mains and branch lines.
[b] Assumes branch lines at center of pipe span and near each support.
[c] Assumes branch lines at third-points of pipe span and near each support.
[d] Assumes branch lines at quarter-points of pipe span and near each support.
[e] Larger diameter pipe can be used when justified by engineering analysis.

Table 9.3.5.5.2(c) Maximum Load (F_{pw}) in Zone of Influence (lb), (F_y = 30 ksi) Schedule 5 Steel Pipe

Pipe (in.)	Lateral Sway Brace Spacing (ft)[a]				
	20[b]	25[b]	30[c]	35[c]	40[d]
1	71	56	46	40	33
1¼	116	93	76	65	55
1½	154	124	101	87	73
2	246	197	161	138	116
2½	459	367	301	258	216
3	691	552	453	388	325
3½	910	728	597	511	428
4[e]	1160	928	760	652	546

Note: ASTM A 106 Grade B or ASTM A 53 Grade B has an F_y = 35 ksi. An F_y = 30 ksi was used also as a conservative value to account for differences in material properties as well as other operational stresses.
[a] The tables for the maximum load, F_{pw}, in zone of influence are based on specific configurations of mains and branch lines.
[b] Assumes branch lines at center of pipe span and near each support.
[c] Assumes branch lines at third-points of pipe span and near each support.
[d] Assumes branch lines at quarter-points of pipe span and near each support.
[e] Larger diameter pipe can be used when justified by engineering analysis.

Table 9.3.5.5.2(d) Maximum Load (F_{pw}) in Zone of Influence (lb), (F_y = 8 ksi) CPVC Pipe

Pipe (in.)	Lateral Sway Brace Spacing (ft)[a]				
	20[b]	25[b]	30[c]	35[c]	40[d]
¾	15	12	10	8	7
1	28	22	18	15	13
1¼	56	45	37	30	26
1½	83	67	55	45	39
2	161	129	105	87	76
2½	286	229	188	154	135
3	516	413	338	278	243

[a] The tables for the maximum load, F_{pw}, in zone of influence are based on specific configurations of mains and branch lines.
[b] Assumes branch lines at center of pipe span and near each support.
[c] Assumes branch lines at third-points of pipe span and near each support.
[d] Assumes branch lines at quarter-points of pipe span and near each support.

9.3.5.5.6 Where there is a change in direction of the piping, the cumulative distance between consecutive lateral sway braces shall not exceed the maximum permitted distance in accordance with 9.3.5.5.2.2.

9.3.5.5.7 The last length of pipe at the end of a feed or cross main shall be provided with a lateral brace.

9.3.5.5.8 Lateral braces shall be allowed to act as longitudinal braces if they are within 24 in. (610 mm) of the centerline of the piping braced longitudinally and the lateral brace is on a pipe of equal or greater size than the pipe being braced longitudinally.

Copyright 2014 National Fire Protection Association (NFPA). Licensed, by agreement, for individual use and download on October 4, 2014 to LEADER and READER for designated user PATTARAPORN SRITRAKOOL. No other reproduction or transmission in any form permitted without written permission of NFPA. For inquires or to report unauthorized use, contact licensing@nfpa.org.

Table 9.3.5.5.2(e) Maximum Load (F_{pw}) in Zone of Influence (lb), (F_y = 30 ksi) Type M Copper Tube (with Soldered Joints)

Pipe (in.)	Lateral Sway Brace Spacing (ft)[a]				
	20[b]	25[b]	30[c]	35[c]	40[d]
¾	16	13	10	9	8
1	29	24	19	16	14
1¼	53	42	35	28	25
1½	86	69	56	46	41
2[e]	180	144	118	97	85

[a] The tables for the maximum load, F_{pw}, in zone of influence are based on specific configurations of mains and branch lines.
[b] Assumes branch lines at center of pipe span and near each support.
[c] Assumes branch lines at third-points of pipe span and near each support.
[d] Assumes branch lines at quarter-points of pipe span and near each support.
[e] Larger diameter pipe can be used when justified by engineering analysis.

9.3.5.5.9 Where flexible couplings are installed on mains other than as required in 9.3.2, a lateral brace shall be provided within 24 in. (610 mm) of every other coupling, including flexible couplings at grooved fittings, but not more than 40 ft (12.2 m) on center.

9.3.5.5.10* The requirements of 9.3.5.5 shall not apply to pipes individually supported by rods less than 6 in. (152 mm) long measured between the top of the pipe and the point of attachment to the building structure.

9.3.5.5.11 The requirements of 9.3.5.5 shall not apply where U-type hooks of the wraparound type or those U-type hooks arranged to keep the pipe tight to the underside of the structural element shall be permitted to be used to satisfy the requirements for lateral sway bracing, provided the legs are bent out at least 30 degrees from the vertical and the maximum length of each leg and the rod size satisfies the conditions of Table 9.3.5.11.8(a), Table 9.3.5.11.8(b), and Table 9.3.5.11.8(c).

9.3.5.6 Longitudinal Sway Bracing.

9.3.5.6.1 Longitudinal sway bracing spaced at a maximum of 80 ft (24.4 m) on center shall be provided for feed and cross mains.

9.3.5.6.2 Longitudinal braces shall be allowed to act as lateral braces if they are within 24 in. (610 mm) of the centerline of the piping braced laterally.

9.3.5.6.3 The distance between the last brace and the end of the pipe or a change in direction shall not exceed 40 ft (12.2 m).

9.3.5.7 Pipe with Change(s) in Direction.

9.3.5.7.1 Each run of pipe between changes in direction shall be provided with both lateral and longitudinal bracing, unless the requirements of 9.3.5.7.2 are met.

9.3.5.7.2* Pipe runs less than 12 ft (3.7 m) in length shall be permitted to be supported by the braces on adjacent runs of pipe.

9.3.5.8 Sway Bracing of Risers.

9.3.5.8.1* Tops of risers exceeding 3 ft (1 m) in length shall be provided with a four-way brace.

9.3.5.8.2 Riser nipples shall be permitted to omit the four-way brace required by 9.3.5.8.1.

9.3.5.8.3 When a four-way brace at the top of a riser is attached on the horizontal piping, it shall be within 24 in. (610 mm) of the centerline of the riser and the loads for that brace shall include both the vertical and horizontal pipe.

9.3.5.8.4 Distance between four-way braces for risers shall not exceed 25 ft (7.6 m).

9.3.5.8.5 Four-way bracing shall not be required where risers penetrate intermediate floors in multistory buildings where the clearance does not exceed the limits of 9.3.4.

9.3.5.9* Horizontal Seismic Loads.

9.3.5.9.1* The horizontal seismic load for the braces shall be as determined in 9.3.5.9.6 or 9.3.5.9.7, or as required by the authority having jurisdiction.

9.3.5.9.2 The weight of the system being braced (W_p) shall be taken as 1.15 times the weight of the water-filled piping. *(See A.9.3.5.9.1.)*

9.3.5.9.3 The horizontal force, F_{pw}, acting on the brace shall be taken as $F_{pw} = C_p W_p$, where C_p is the seismic coefficient selected in Table 9.3.5.9.3 utilizing the short period response parameter, S_s.

Table 9.3.5.9.3 Seismic Coefficient Table

S_s	C_p
0.33 or less	0.35
0.40	0.38
0.50	0.40
0.60	0.42
0.70	0.42
0.75	0.42
0.80	0.44
0.90	0.48
0.95	0.50
1.00	0.51
1.10	0.54
1.20	0.57
1.25	0.58
1.30	0.61
1.40	0.65
1.50	0.70
1.60	0.75
1.70	0.79
1.75	0.82
1.80	0.84
1.90	0.89
2.00	0.93
2.10	0.98
2.20	1.03
2.30	1.07
2.40	1.12
2.50	1.17
2.60	1.21
2.70	1.26
2.80	1.31
2.90	1.35
3.00	1.40

Copyright 2014 National Fire Protection Association (NFPA). Licensed, by agreement, for individual use and download on October 4, 2014 to LEADER and READER for designated user PATTARAPORN SRITRAKOOL. No other reproduction or transmission in any form permitted without written permission of NFPA. For inquires or to report unauthorized use, contact licensing@nfpa.org.

9.3.5.9.3.1 The value of S_s used in Table 9.3.5.9.3 shall be obtained from the authority having jurisdiction or from seismic hazard maps.

9.3.5.9.3.2* Linear interpolation shall be permitted to be used for intermediate values of S_s.

9.3.5.9.4* The horizontal force, F_{pw}, acting on the brace shall be permitted to be determined in accordance with Section 13.3.1 of SEI/ASCE 7, *Minimum Design Loads of Buildings and Other Structures*, multiplied by 0.7 to convert to allowable stress design (ASD).

9.3.5.9.5* Where data for determining C_p are not available, the horizontal seismic force acting on the braces shall be determined as specified in 9.3.5.9.3 with $C_p = 0.5$.

9.3.5.9.6* The zone of influence for lateral braces shall include all branch lines and mains tributary to the brace, except branch lines that are provided with longitudinal bracing or as prohibited by 9.3.5.9.6.1.

9.3.5.9.6.1* When riser nipples are provided in systems requiring seismic protection and are longer than 4 ft (1.2 m), the weight of the water-filled branch line pipe in the zone of influence (W_p) as defined by 9.3.5.9.1, including the length of the riser nipple, multiplied by the seismic coefficient (C_p), and by the height of the riser nipple (H_r), divided by the section modulus (S) of the riser nipple piping shall not meet or exceed the yield strength (F_y) of the riser nipple piping. If the calculated value is equal to or greater than the yield strength or the riser nipple, the longitudinal seismic load of each line shall be evaluated individually and branch lines shall be provided with longitudinal sway bracing per 9.3.5.6.

$$\frac{\left(H_r \cdot W_p \cdot C_p\right)}{S} \geq F_y$$

where:

H_r = length of riser nipple piping (in inches)
W_p = tributary weight (in pounds) for the branch line or portion of branch line within the zone of influence including the riser nipple
C_p = seismic coefficient
S = sectional modulus of the riser nipple pipe
F_y = allowable yield strength of 30,000 psi for steel, 30,000 psi for copper (soldered), 8000 psi for CPVC

9.3.5.9.6.2 If the calculated value is equal to or greater than the yield strength of the riser nipple, the longitudinal seismic load of each line shall be evaluated individually and branch lines shall be provided with longitudinal sway bracing per 9.3.5.4.

9.3.5.9.7 The zone of influence for longitudinal braces shall include all mains tributary to the brace.

9.3.5.10 Net Vertical Reaction Forces. Where the horizontal seismic loads used exceed 0.5 W_p and the brace angle is less than 45 degrees from vertical or where the horizontal seismic load exceeds 1.0 W_p and the brace angle is less than 60 degrees from vertical, the braces shall be arranged to resist the net vertical reaction produced by the horizontal load.

9.3.5.11* Sway Brace Installation.

9.3.5.11.1 Bracing shall be attached directly to the system pipe.

9.3.5.11.2 Sway bracing shall be tight.

9.3.5.11.3 For individual braces, the slenderness ratio *(l/r)* shall not exceed 300, where *l* is the length of the brace and *r* is the least radius of gyration.

9.3.5.11.4 Where threaded pipe is used as part of a sway brace assembly, it shall not be less than Schedule 30.

9.3.5.11.5 All parts and fittings of a brace shall lie in a straight line to avoid eccentric loadings on fittings and fasteners.

9.3.5.11.6 For longitudinal braces only, the brace shall be permitted to be connected to a tab welded to the pipe in conformance to 6.5.2.

9.3.5.11.7 For tension-only braces, two tension-only brace components opposing each other must be installed at each lateral or longitudinal brace location.

9.3.5.11.8* The loads determined in 9.3.5.9 shall not exceed the lesser of the maximum allowable loads provided in Table 9.3.5.11.8(a), Table 9.3.5.11.8(b), and Table 9.3.5.11.8(c) or the manufacturer's certified maximum allowable horizontal loads for brace angles of 30 to 44 degrees, 45 to 59 degrees, 60 to 89 degrees, or 90 degrees.

9.3.5.11.9* Other pipe schedules and materials not specifically included in Table 9.3.5.11.8(a), Table 9.3.5.11.8(b), and Table 9.3.5.11.8(c) shall be permitted to be used if certified by a registered professional engineer to support the loads determined in accordance with the criteria in the tables.

9.3.5.11.9.1 Calculations shall be submitted where required by the authority having jurisdiction.

9.3.5.11.10 C-type clamps including beam and large flange clamps, with or without restraining straps, shall not be used to attach braces to the building structure.

9.3.5.11.11 Powder-driven fasteners shall not be used to attach braces to the building structure, unless they are specifically listed for service in resisting lateral loads in areas subject to earthquakes.

9.3.5.12* Fasteners.

9.3.5.12.1* For individual fasteners, the loads determined in 9.3.5.9 shall not exceed the allowable loads provided in Figure 9.3.5.12.1.

9.3.5.12.2 The type of fasteners used to secure the bracing assembly to the structure shall be limited to those shown in Figure 9.3.5.12.1 or to listed devices.

9.3.5.12.3* For connections to wood, through-bolts with washers on each end shall be used, unless the requirements of 9.3.5.12.4 are met.

9.3.5.12.4 Where it is not practical to install through-bolts due to the thickness of the wood member in excess of 12 in. (305 mm) or inaccessibility, lag screws shall be permitted and holes shall be pre-drilled ⅛ in. (3.2 mm) smaller than the maximum root diameter of the lag screw.

9.3.5.12.5 Holes for through-bolts and similar listed attachments shall be 1/16 in. (1.6 mm) greater than the diameter of the bolt.

9.3.5.12.6 The requirements of 9.3.5.12 shall not apply to other fastening methods, which shall be acceptable for use if certified by a registered professional engineer to support the loads determined in accordance with the criteria in 9.3.5.9.

Copyright 2014 National Fire Protection Association (NFPA). Licensed, by agreement, for individual use and download on October 4, 2014 to LEADER and READER for designated user PATTARAPORN SRITRAKOOL. No other reproduction or transmission in any form permitted without written permission of NFPA. For inquires or to report unauthorized use, contact licensing@nfpa.org.

Table 9.3.5.11.8(a) Maximum Horizontal Loads for Sway Braces with $l/r = 100$ for Steel Braces with $F_y = 36$ ksi

Brace Shape and Size (in.)		Area (in.^{2})	Least Radius of Gyration (r) (in.)	Maximum Length for $l/r = 100$		Maximum Horizontal Load (lb)		
						Brace Angle		
				ft	in.	30° to 44° Angle from Vertical	45° to 59° Angle from Vertical	60° to 90° Angle from Vertical
Pipe Schedule 40	1	0.494	0.421	3	6	3,150	4,455	5,456
	1¼	0.669	0.540	4	6	4,266	6,033	7,389
	1½	0.799	0.623	5	2	5,095	7,206	8,825
	2	1.07	0.787	6	6	6,823	9,650	11,818
Angles	1½ × 1½ × ¼	0.688	0.292	2	5	4,387	6,205	7,599
	2 × 2 × ¼	0.938	0.391	3	3	5,982	8,459	10,360
	2½ × 2 × ¼	1.06	0.424	3	6	6,760	9,560	11,708
	2½ × 2½ × ¼	1.19	0.491	4	1	7,589	10,732	13,144
	3 × 2½ × ¼	1.31	0.528	4	4	8,354	11,814	14,469
	3 × 3 × ¼	1.44	0.592	4	11	9,183	12,987	15,905
Rods (all thread)	⅜	0.07	0.075	0	7	446	631	773
	½	0.129	0.101	0	10	823	1,163	1,425
	⅝	0.207	0.128	1	0	1,320	1,867	2,286
	¾	0.309	0.157	1	3	1,970	2,787	3,413
	⅞	0.429	0.185	1	6	2,736	3,869	4,738
Rods (threaded at ends only)	⅜	0.11	0.094	0	9	701	992	1,215
	½	0.196	0.125	1	0	1,250	1,768	2,165
	⅝	0.307	0.156	1	3	1,958	2,769	3,391
	¾	0.442	0.188	1	6	2,819	3,986	4,882
	⅞	0.601	0.219	1	9	3,833	5,420	6,638
Flats	1½ × ¼	0.375	0.0722	0	7	2,391	3,382	4,142
	2 × ¼	0.5	0.0722	0	7	3,189	4,509	5,523
	2 × ⅜	0.75	0.1082	0	10	4,783	6,764	8,284

9.3.5.12.6.1 Calculations shall be submitted where required by the authority having jurisdiction.

9.3.5.12.7 Concrete Anchors.

9.3.5.12.7.1* Concrete anchors shall be prequalified for seismic applications in accordance with ACI 355.2, *Qualification of Post-Installed Mechanical Anchors in Concrete and Commentary*, and installed in accordance with the manufacturer's instructions.

9.3.5.12.7.2 Concrete anchors other than those shown in Figure 9.3.5.12.1 shall be acceptable for use where designed in accordance with the requirements of the building code and certified by a registered professional engineer.

9.3.5.13 Braces to Buildings with Differential Movement. A length of pipe shall not be braced to sections of the building that will move differentially.

9.3.6 Restraint of Branch Lines.

9.3.6.1* Restraint is considered a lesser degree of resisting loads than bracing and shall be provided by use of one of the following:

(1) Listed sway brace assembly
(2) Wraparound U-hook satisfying the requirements of 9.3.5.5.11
(3) No. 12, 440 lb (200 kg) wire installed at least 45 degrees from the vertical plane and anchored on both sides of the pipe
(4) CPVC hangers utilizing two points of attachment
(5)*Hanger not less than 45 degrees from vertical installed within 6 in. (152 mm) of the vertical hanger arranged for restraint against upward movement, provided it is utilized such that l/r does not exceed 400, where the rod shall extend to the pipe or have a surge clip installed
(6) Other approved means

9.3.6.2 Wire Restraint.

9.3.6.2.1 Wire used for restraint shall be located within 2 ft (610 mm) of a hanger.

9.3.6.2.2 The hanger closest to a wire restraint shall be of a type that resists upward movement of a branch line.

9.3.6.3 The end sprinkler on a branch line shall be restrained.

9.3.6.4* Branch lines shall be laterally restrained at intervals not exceeding those specified in Table 9.3.6.4(a) or Table 9.3.6.4(b) based on branch line diameter and the value of C_p.

Copyright 2014 National Fire Protection Association (NFPA). Licensed, by agreement, for individual use and download on October 4, 2014 to LEADER and READER for designated user PATTARAPORN SRITRAKOOL. No other reproduction or transmission in any form permitted without written permission of NFPA. For inquires or to report unauthorized use, contact licensing@nfpa.org.

Table 9.3.5.11.8(b) Maximum Horizontal Loads for Sway Braces with $l/r = 200$ for Steel Braces with $F_y = 36$ ksi

Brace Shape and Size (in.)		Area (in.^{2})	Least Radius of Gyration *(r)* (in.)	Maximum Length for $l/r = 200$		Maximum Horizontal Load (lb)		
						Brace Angle		
				ft	in.	30° to 44° Angle from Vertical	45° to 59° Angle from Vertical	60° to 90° Angle from Vertical
Pipe Schedule 40	1	0.494	0.421	7	0	926	1310	1604
	1¼	0.669	0.540	9	0	1254	1774	2173
	1½	0.799	0.623	10	4	1498	2119	2595
	2	1.07	0.787	13	1	2006	2837	3475
Angles	1½ × 1½ × ¼	0.688	0.292	4	10	1290	1824	2234
	2 × 2 × ¼	0.938	0.391	6	6	1759	2487	3046
	2½ × 2 × ¼	1.06	0.424	7	0	1988	2811	3442
	2½ × 2½ × ¼	1.19	0.491	8	2	2231	3155	3865
	3 × 2½ × ¼	1.31	0.528	8	9	2456	3474	4254
	3 × 3 × ¼	1.44	0.592	9	10	2700	3818	4677
Rods (all thread)	⅜	0.07	0.075	1	2	131	186	227
	½	0.129	0.101	1	8	242	342	419
	⅝	0.207	0.128	2	1	388	549	672
	¾	0.309	0.157	2	7	579	819	1004
	⅞	0.429	0.185	3	0	804	1138	1393
Rods (threaded at ends only)	⅜	0.11	0.094	1	6	206	292	357
	½	0.196	0.125	2	0	368	520	637
	⅝	0.307	0.156	2	7	576	814	997
	¾	0.442	0.188	3	1	829	1172	1435
	⅞	0.601	0.219	3	7	1127	1594	1952
Flats	1½ × ¼	0.375	0.0722	1	2	703	994	1218
	2 × ¼	0.5	0.0722	1	2	938	1326	1624
	2 × ⅜	0.75	0.1082	1	9	1406	1989	2436

9.3.6.5 Where the branch lines are supported by rods less than 6 in. (152 mm) long measured between the top of the pipe and the point of attachment to the building structure, the requirements of 9.3.6.1 through 9.3.6.4 shall not apply and additional restraint shall not be required for the branch lines.

9.3.6.6* Sprigs 4 ft (1.2 m) or longer shall be restrained against lateral movement.

9.3.6.7 Drops and armovers shall not require restraint.

9.3.7 Hangers and Fasteners Subject to Earthquakes.

9.3.7.1 Where seismic protection is provided, C-type clamps (including beam and large flange clamps) used to attach hangers to the building structure shall be equipped with a restraining strap unless the provisions of 9.3.7.1.1 are satisfied.

9.3.7.1.1 As an alternative to the installation of a required restraining strap, a device investigated and specifically listed to restrain the clamp to the structure is permitted where the intent of the device is to resist the worst-case expected horizontal load.

9.3.7.2 The restraining strap shall be listed for use with a C-type clamp or shall be a steel strap of not less than 16 gauge (1.57 mm) thickness and not less than 1 in. (25.4 mm) wide for pipe diameters 8 in. (200 mm) or less and 14 gauge (1.98 mm) thickness and not less than 1¼ in. (31.7 mm) wide for pipe diameters greater than 8 in. (200 mm).

9.3.7.3 The restraining strap shall wrap around the beam flange not less than 1 in. (25.4 mm).

9.3.7.4 A lock nut on a C-type clamp shall not be used as a method of restraint.

9.3.7.5 A lip on a "C" or "Z" purlin shall not be used as a method of restraint.

9.3.7.6 Where purlins or beams do not provide a secure lip to a restraining strap, the strap shall be through-bolted or secured by a self-tapping screw.

9.3.7.7 In areas where the horizontal force factor exceeds 0.50 W_p, powder-driven studs shall be permitted to attach hangers to the building structure where they are specifically listed for use in areas subject to earthquakes.

9.3.7.8 Where seismic protection is provided, concrete anchors used to secure hangers to the building structure shall be in accordance with ACI 355.2, *Qualification of Post-Installed Mechanical Anchors in Concrete and Commentary*, and installed in accordance with manufacturer's instructions.

Copyright 2014 National Fire Protection Association (NFPA). Licensed, by agreement, for individual use and download on October 4, 2014 to LEADER and READER for designated user PATTARAPORN SRITRAKOOL. No other reproduction or transmission in any form permitted without written permission of NFPA. For inquires or to report unauthorized use, contact licensing@nfpa.org.

Table 9.3.5.11.8(c) Maximum Horizontal Loads for Sway Braces with $l/r = 300$ for Steel Braces with $F_y = 36$ ksi

Brace Shape and Size (in.)		Area (in.^{2})	Least Radius of Gyration (r) (in.)	Maximum Length for $l/r = 300$		Maximum Horizontal Load (lb)		
						Brace Angle		
				ft	in.	30° to 44° Angle from Vertical	45° to 59° Angle from Vertical	60° to 90° Angle from Vertical
Pipe Schedule 40	1	0.494	0.421	10	6	412	582	713
	1¼	0.669	0.540	13	6	558	788	966
	1½	0.799	0.623	15	6	666	942	1153
	2	1.07	0.787	19	8	892	1261	1544
Angles	1½ × 1½ × ¼	0.688	0.292	7	3	573	811	993
	2 × 2 × ¼	0.938	0.391	9	9	782	1105	1354
	2½ × 2 × ¼	1.06	0.424	10	7	883	1249	1530
	2½ × 2½ × ¼	1.19	0.491	12	3	992	1402	1718
	3 × 2½ × ¼	1.31	0.528	13	2	1092	1544	1891
	3 × 3 × ¼	1.44	0.592	14	9	1200	1697	2078
Rods (all thread)	⅜	0.07	0.075	1	10	58	82	101
	½	0.129	0.101	2	6	108	152	186
	⅝	0.207	0.128	3	2	173	244	299
	¾	0.309	0.157	3	11	258	364	446
	⅞	0.429	0.185	4	7	358	506	619
Rods (threaded at ends only)	⅜	0.11	0.094	2	4	92	130	159
	½	0.196	0.125	3	1	163	231	283
	⅝	0.307	0.156	3	10	256	362	443
	¾	0.442	0.188	4	8	368	521	638
	⅞	0.601	0.219	5	5	501	708	867
Flats	1½ × ¼	0.375	0.0722	1	9	313	442	541
	2 × ¼	0.5	0.0722	1	9	417	589	722
	2 × ⅜	0.75	0.1082	2	8	625	884	1083

Copyright 2014 National Fire Protection Association (NFPA). Licensed, by agreement, for individual use and download on October 4, 2014 to LEADER and READER for designated user PATTARAPORN SRITRAKOOL. No other reproduction or transmission in any form permitted without written permission of NFPA. For inquires or to report unauthorized use, contact licensing@nfpa.org.

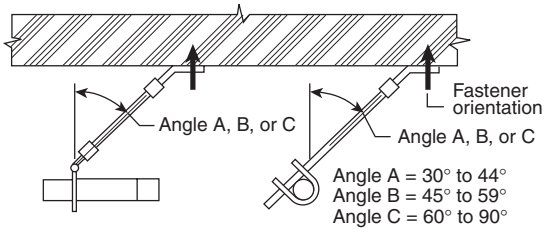

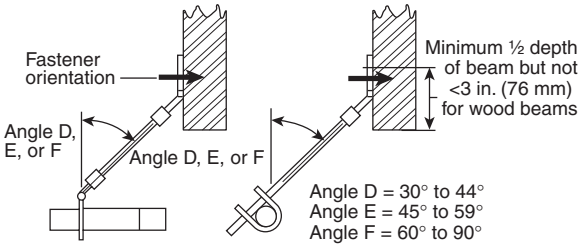

Load Perpendicular to Structural Member

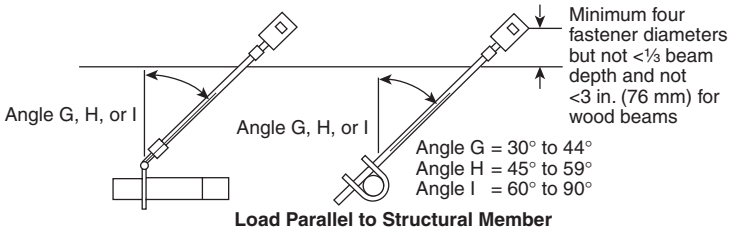

Load Parallel to Structural Member

Wedge Anchors in 3000 psi Lightweight Concrete-Filled Metal Decking										
Diameter (in.)	Embedment (in.)	A	B	C	D	E	F	G	H	I
⅜	2	116	216	420	—	—	—	—	—	—
½	3¼	215	406	826	—	—	—	—	—	—
⅝	4	369	673	1282	—	—	—	—	—	—

Wedge Anchors in 3000 psi Normal Weight Cracked Concrete										
Diameter (in.)	Embedment (in.)	A	B	C	D	E	F	G	H	I
⅜	2	173	308	557	321	308	301	458	591	678
½	3¼	391	713	1358	784	713	678	1215	1537	1741
⅝	4	553	1021	2008	1159	1021	956	1904	2378	2671
¾	4¾	717	1332	2638	1523	1332	1243	2536	3155	3537

Undercut Anchors in 3000 psi Normal Weight Concrete										
Diameter (in.)	Embedment (in.)	A	B	C	D	E	F	G	H	I
⅜	4	685	1106	1714	989	1106	1187	1171	1571	1849
½	5	855	1479	2552	1473	1479	1483	1975	2582	2988
⅝	7½	1153	2041	3675	2121	2041	1997	3022	3902	4478

Wedge Anchors in 3000 psi Lightweight Cracked Concrete										
Diameter (in.)	Embedment (in.)	A	B	C	D	E	F	G	H	I
⅜	2	110	206	410	236	206	191	396	492	551
½	3¼	245	467	970	559	467	426	1021	1239	1368
⅝	4	344	661	1406	811	661	597	1569	1876	2055
¾	4¾	446	859	1839	1061	859	774	2078	2476	2706

Wedge Anchors in 4000 psi Normal Weight Cracked Concrete										
Diameter (in.)	Embedment (in.)	A	B	C	D	E	F	G	H	I
⅜	2	196	342	600	346	342	341	473	616	711
½	3¼	443	797	1477	852	797	769	1264	1616	1842
⅝	4	627	1147	2198	1268	1147	1088	1990	2513	2843
¾	4¾	816	1498	2891	1668	1498	1414	2653	3339	3770

Wedge Anchors in 6000 psi Normal Weight Cracked Concrete										
Diameter (in.)	Embedment (in.)	A	B	C	D	E	F	G	H	I
⅜	2	232	394	661	381	394	402	492	648	754
½	3¼	528	928	1649	951	928	916	1326	1720	1979
⅝	4	750	1344	2474	1428	1344	1300	2102	2694	3077
¾	4¾	976	1756	3261	1882	1756	1691	2807	3587	4089

Connections to Steel (Values Assume Bolt Perpendicular to Mounting Surface)																		
Diameter of Unfinished Steel Bolt (in.)																		
¼									⅜									
A	B	C	D	E	F	G	H	I	A	B	C	D	E	F	G	H	I	
400	500	600	300	500	650	325	458	565	900	1200	1400	800	1200	1550	735	1035	1278	
Diameter of Unfinished Steel Bolt (in.)																		
½									⅝									
A	B	C	D	E	F	G	H	I	A	B	C	D	E	F	G	H	I	
1600	2050	2550	1450	2050	2850	1300	1830	2260	2500	3300	3950	2250	3300	4400	2045	2880	3557	

Through-Bolts in Sawn Lumber or Glue-Laminated Timbers (Load Perpendicular to Grain)																												
Length of Bolt in Timber (in.)		Bolt Diameter (in.)																										
		½									⅝										¾							
		A	B	C	D	E	F	G	H	I	A	B	C	D	E	F	G	H	I		A	B	C	D	E	F	G	H	I
	1½	115	165	200	135	230	395	130	215	310	135	190	235	155	270	460	155	255	380		155	220	270	180	310	530	170	300	450
	2½	140	200	240	160	280	480	165	275	410	160	225	280	185	320	550	190	320	495		180	255	310	205	360	615	215	365	575
	3½	175	250	305	200	350	600	200	330	485	200	285	345	230	400	685	235	405	635		220	310	380	255	440	755	260	455	730
	5½	—	—	—	—	—	—	—	—	—	280	395	485	325	560	960	315	515	735		310	440	535	360	620	1065	360	610	925

Lag Screws and Lag Bolts in Wood (Load Perpendicular to Grain — Holes Predrilled Using Good Practice)																												
Length of Bolt in Timber (in.)		Lag Bolt Diameter (in.)																										
		⅜									½										⅝							
		A	B	C	D	E	F	G	H	I	A	B	C	D	E	F	G	H	I		A	B	C	D	E	F	G	H	I
	3½	165	190	200	170	220	310	80	120	170	—	—	—	—	—	—	—	—	—		—	—	—	—	—	—	—	—	—
	4½	180	200	200	175	235	350	80	120	170	300	355	380	315	400	550	145	230	325		—	—	—	—	—	—	—	—	—
	5½	190	200	200	175	245	380	80	120	170	320	370	380	320	420	610	145	230	325		435	525	555	425	550	775	195	320	460
	6½	195	205	200	175	250	400	80	120	170	340	375	380	325	435	650	145	230	325		465	540	555	430	570	840	195	320	460

Note: Wood fastener maximum capacity values are based on 2001 National Design Specifications (NDS) for wood with a specific gravity of 0.35. Values for other types of wood can be obtained by multiplying the above values by the following factors:

Specific Gravity of Wood	Multiplier
0.36 thru 0.49	1.17
0.50 thru 0.65	1.25
0.66 thru 0.73	1.50

For SI values, 1 in. = 25.4 mm.

FIGURE 9.3.5.12.1 Maximum Loads for Various Types of Structures and Maximum Loads for Various Types of Fasteners to Structures.

Copyright 2014 National Fire Protection Association (NFPA). Licensed, by agreement, for individual use and download on October 4, 2014 to LEADER and READER for designated user PATTARAPORN SRITRAKOOL. No other reproduction or transmission in any form permitted without written permission of NFPA. For inquires or to report unauthorized use, contact licensing@nfpa.org.

Table 9.3.6.4(a) Maximum Spacing (ft) of Steel Branch Line Restraints

	Seismic Coefficient (C_p)		
Pipe (in.)	$C_p \leq 0.50$	$0.5 < C_p \leq 0.71$	$C_p > 0.71$
1	43	36	26
1¼	46	39	27
1½	49	41	29
2	53	45	31

Table 9.3.6.4(b) Maximum Spacing (ft) of CPVC and Copper Branch Line Restraints

	Seismic Coefficient (C_p)		
Pipe (in.)	$C_p \leq 0.50$	$0.5 < C_p \leq 0.71$	$C_p > 0.71$
¾	31	26	18
1	34	28	20
1¼	37	31	22
1½	40	34	24
2	45	38	27

Chapter 10 Underground Piping

10.1* Piping Materials. [**24:**10.1]

10.1.1* Listing. Piping shall be listed for fire protection service or shall comply with the standards in Table 10.1.1. [**24:**10.1.1]

10.1.2 Steel Pipe. Steel piping shall not be used for general underground service unless specifically listed for such service. [**24:**10.1.2]

10.1.3 Steel Pipe Used with Fire Department Connections. Where externally coated and wrapped and internally galvanized, steel pipe shall be permitted to be used between the check valve and the outside hose coupling for the fire department connection. [**24:**10.1.3]

10.1.4* Pipe Type and Class. The type and class of pipe for a particular underground installation shall be determined through consideration of the following factors:

(1) Fire resistance of the pipe
(2) Maximum system working pressure
(3) Depth at which the pipe is to be installed
(4) Soil conditions
(5) Corrosion
(6) Susceptibility of pipe to other external loads, including earth loads, installation beneath buildings, and traffic or vehicle loads

[**24:**10.1.4]

10.1.5* Working Pressure. Piping, fittings, and other system components shall be rated for the maximum system working pressure to which they are exposed but shall not be rated at less than 150 psi (10 bar). [**24:**10.1.5]

10.1.6* Lining of Buried Pipe. [**24:**10.1.6]

10.1.6.1 Unless the requirements of 10.1.6.2 are met, all ferrous metal pipe shall be lined in accordance with the applicable standards in Table 10.1.1. [**24:**10.1.6.1]

10.1.6.2 Steel pipe utilized in fire department connections and protected in accordance with the requirements of 10.1.3 shall not be required to be internally lined. [**24:**10.1.6.2]

10.2 Fittings. [**24:**10.2]

10.2.1* Buried Fittings. Fittings shall be of an approved type with joints and pressure class ratings compatible with the pipe used. [**24:** 10.2.1]

10.2.2 Standard Fittings.

10.2.2.1 Fittings shall meet the standards in Table 10.2.2.1 or shall be in accordance with 10.2.3. [**24:**10.2.2.1]

10.2.2.2 In addition to the standards in Table 10.2.2.2, CPVC fittings shall also be in accordance with 10.2.3 and with the portions of the ASTM standards specified in Table 10.2.2.2 that apply to fire protection service. [**24:**10.2.2.2]

10.2.3 Special Listed Fittings. Other types of fittings investigated for suitability in automatic sprinkler installations and listed for this service, including, but not limited to, polybutylene, CPVC, and steel differing from that provided in Table 10.2.2.1, shall be permitted when installed in accordance with their listing limitations, including installation instructions. [**24:**10.2.3]

10.2.4 Pressure Limits. Listed fittings shall be permitted for system pressures as specified in their listings, but not less than 150 psi (10 bar). [**24:**10.2.4]

• **10.3 Joining of Pipe and Fittings.** [**24:**10.3]

10.3.1 Buried Joints. Joints shall be approved. [**24:**10.3.1]

10.3.2 Threaded Pipe and Fittings. All threaded steel pipe and fittings shall have threads cut in accordance with ASME B1.20.1, *Pipe Threads, General Purpose (Inch).* [**24:**10.3.2]

10.3.3* Groove Joining Methods. Pipes joined with grooved fittings shall be joined by a listed combination of fittings, gaskets, and grooves. [**24:**10.3.3]

10.3.4 Brazed and Pressure Fitting Methods. Joints for the connection of copper tube shall be brazed or joined using pressure fittings as specified in Table 10.2.2.1. [**24:**10.3.4]

10.3.5 Other Joining Methods. Other joining methods listed for this service shall be permitted where installed in accordance with their listing limitations. [**24:**10.3.5]

10.3.6 Pipe Joint Assembly. [**24:**10.3.6]

10.3.6.1 Joints shall be assembled by persons familiar with the particular materials being used and in accordance with the manufacturer's instructions and specifications. [**24:**10.3.6.1]

10.3.6.2* All bolted joint accessories shall be cleaned and thoroughly coated with asphalt or other corrosion-retarding material after installation. [**24:**10.3.6.2]

10.4 Depth of Cover. [**24:**10.4]

10.4.1* The depth of cover over water pipes shall be determined by the maximum depth of frost penetration in the locality where the pipe is laid. [**24:**10.4.1]

10.4.2 The top of the pipe shall be buried not less than 1 ft (0.3 m) below the frost line for the locality. [**24:**10.4.2]

Copyright 2014 National Fire Protection Association (NFPA). Licensed, by agreement, for individual use and download on October 4, 2014 to LEADER and READER for designated user PATTARAPORN SRITRAKOOL. No other reproduction or transmission in any form permitted without written permission of NFPA. For inquires or to report unauthorized use, contact licensing@nfpa.org.

Table 10.1.1 Manufacturing Standards for Underground Pipe

Materials and Dimensions	Standard
Ductile Iron	
Cement Mortar Lining for Ductile Iron Pipe and Fittings for Water	AWWA C104
Polyethylene Encasement for Ductile Iron Pipe Systems	AWWA C105
Ductile Iron and Gray Iron Fittings, 3 in. Through 48 in., for Water and Other Liquids	AWWA C110
Rubber-Gasket Joints for Ductile Iron Pressure Pipe and Fittings	AWWA C111
Flanged Ductile Iron Pipe with Ductile Iron or Gray Iron Threaded Flanges	AWWA C115
Protective Fusion-Bonded Epoxy Coatings for the Interior and Exterior Surfaces of Ductile-Iron and Gray-Iron Fittings for Water Supply Service	AWWA C116
Thickness Design of Ductile Iron Pipe	AWWA C150
Ductile Iron Pipe, Centrifugally Cast for Water	AWWA C151
Ductile-Iron Compact Fittings for Water Service	AWWA C153
Standard for the Installation of Ductile Iron Water Mains and Their Appurtenances	AWWA C600
Steel	
Steel Water Pipe 6 in. and Larger	AWWA C200
Coal-Tar Protective Coatings and Linings for Steel Water Pipelines Enamel and Tape — Hot Applied	AWWA C203
Cement-Mortar Protective Lining and Coating for Steel Water Pipe 4 in. and Larger — Shop Applied	AWWA C205
Field Welding of Steel Water Pipe	AWWA C206
Steel Pipe Flanges for Waterworks Service — Sizes 4 in. Through 144 in.	AWWA C207
Dimensions for Fabricated Steel Water Pipe Fittings	AWWA C208
A Guide for Steel Pipe Design and Installation	AWWA M11
Concrete	
Reinforced Concrete Pressure Pipe, Steel-Cylinder Type	AWWA C300
Prestressed Concrete Pressure Pipe, Steel-Cylinder Type	AWWA C301
Reinforced Concrete Pressure Pipe, Non-Cylinder Type	AWWA C302
Reinforced Concrete Pressure Pipe, Steel-Cylinder Type, Pretensioned	AWWA C303
Standard for Asbestos-Cement Distribution Pipe, 4 in. Through 16 in., for Water Distribution Systems	AWWA C400
Standard for the Selection of Asbestos-Cement Pressure Pipe	AWWA C401
Cement-Mortar Lining of Water Pipe Lines 4 in. and Larger — in Place	AWWA C602
Standard for the Installation of Asbestos-Cement Water Pipe	AWWA C603
Plastic	
Polyvinyl Chloride (PVC) Pressure Pipe, 4 in. Through 12 in., for Water Distribution	AWWA C900
Polyvinyl Chloride (PVC) Pressure Pipe, 14 in. Through 48 in., for Water Distribution	AWWA C905
Polyethylene (PE) Pressure Pipe and Fittings, 4 in. (100 mm) Through 63 in. (1575 mm) for Water Distribution	AWWA C906
Copper	
Specification for Seamless Copper Tube	ASTM B 75
Specification for Seamless Copper Water Tube	ASTM B 88
Requirements for Wrought Seamless Copper and Copper-Alloy Tube	ASTM B 251

[**24:** Table 10.1.1]

Copyright 2014 National Fire Protection Association (NFPA). Licensed, by agreement, for individual use and download on October 4, 2014 to LEADER and READER for designated user PATTARAPORN SRITRAKOOL. No other reproduction or transmission in any form permitted without written permission of NFPA. For inquires or to report unauthorized use, contact licensing@nfpa.org.

Table 10.2.2.1 Fittings Materials and Dimensions

Materials and Dimensions	Standard
Cast Iron	
Cast Iron Threaded Fittings, Classes 125 and 250	ASME B16.4
Cast Iron Pipe Flanges and Flanged Fittings, Classes 12, 125, and 250	ASME B16.1
Malleable Iron	
Malleable Iron Threaded Fittings, Class 150 and 300	ASME B16.3
Steel	
Factory-Made Wrought Steel Buttweld Fittings	ASME B16.9
Buttwelding Ends	ASME B16.25
Specification for Piping Fittings of Wrought Carbon Steel and Alloy Steel for Moderate and Elevated Temperatures	ASTM A 234
Pipe Flanges and Flanged Fittings, NPS ½ Through 24	ASME B16.5
Forged Steel Fittings, Socket Welded and Threaded	ASME B16.11
Copper	
Wrought Copper and Bronze Solder Joint Pressure Fittings	ASME B16.22
Cast Bronze Solder Joint Pressure Fittings	ASME B16.18

[**24:** Table 10.2.2.1]

Table 10.2.2.2 Specially Listed Fittings Materials and Dimensions

Materials and Dimensions	Standard
Chlorinated Polyvinyl Chloride (CPVC) Specification for Schedule 80 CPVC Threaded Fittings	ASTM F 437
Specification for Schedule 40 CPVC Socket-Type Fittings	ASTM F 438
Specification for Schedule 80 CPVC Socket-Type Fittings	ASTM F 439

[**24:** Table 10.2.2.2]

10.4.3 In those locations where frost is not a factor, the depth of cover shall be not less than 2½ ft (0.8 m) to prevent mechanical damage. [**24:**10.4.3]

10.4.4 Pipe under driveways shall be buried a minimum of 3 ft (0.9 m). [**24:**10.4.4]

10.4.5 Pipe under railroad tracks shall be buried at a minimum of 4 ft (1.2 m). [**24:**10.4.5]

10.4.6 The depth of cover shall be measured from the top of the pipe to finished grade, and due consideration shall always be given to future or final grade and nature of soil. [**24:**10.4.6]

10.5 Protection Against Freezing. [**24:**10.5]

10.5.1* Where it is impracticable to bury pipe, pipe shall be permitted to be laid aboveground, provided the pipe is protected against freezing and mechanical damage. [**24:**10.5.1]

10.5.2 Pipe shall be buried below the frost line where entering streams and other bodies of water. [**24:**10.5.2]

10.5.3 Where pipe is laid in water raceways or shallow streams, care shall be taken that there will be sufficient depth of running water between the pipe and the frost line during all seasons of frost; a safer method is to bury the pipe 1 ft (0.30 m) or more under the bed of the waterway. [**24:**10.5.3]

10.5.4 Pipe shall be located at a distance from stream banks and embankment walls that prevents danger of freezing through the side of the bank. [**24:**10.5.4]

10.6 Protection Against Damage. [**24:**10.6]

10.6.1 Pipe shall not be run under the building except where permitted in 10.6.2 and 10.6.3. [**24:**10.6.1]

10.6.2 Where approved, pipe shall be permitted to be run under buildings, and special precautions shall be taken, including the following:

(1) Arching the foundation walls over the pipe
(2) Running pipe in covered trenches
(3) Providing valves to isolate sections of pipe under buildings

[**24:**10.6.2]

10.6.3 Fire service mains shall be permitted to enter the building adjacent to the foundation. [**24:**10.6.3]

10.6.3.1* The requirements of 10.6.2(2) and 10.6.2(3) shall not apply where fire service mains enter under the building no more than 10 ft (3 m) as measured from the outside edge of the building to the center of the vertical pipe. [**24:**10.6.3.1]

10.6.4* Pipe joints shall not be located under foundation footings. [**24:**10.6.4]

10.6.5* Piping shall be run at least 1 ft (305 mm) below the bottom of foundations/footers. [**24:**10.6.5]

10.6.5.1 The requirements of 10.6.6 shall not apply when piping is sleeved. [**24:**10.6.5.1]

10.6.6 Mains shall be subjected to an evaluation of the following specific loading conditions and protected, if necessary:

(1) Mains running under railroads carrying heavy cargo
(2) Mains running under large piles of heavy commodities
(3) Mains located in areas that subject the main to heavy shock and vibrations

[**24:**10.6.6]

10.6.7* Where it is necessary to join metal pipe with pipe of dissimilar metal, the joint shall be insulated against the passage of an electric current using an approved method. [**24:**10.6.7]

10.6.8* In no case shall the underground piping be used as a grounding electrode for electrical systems. [**24:**10.6.8]

10.6.8.1* The requirement of 10.6.8 shall not preclude the bonding of the underground piping to the lightning protection grounding system as required by NFPA 780 in those cases where lightning protection is provided for the structure. [**24:**10.6.8.1]

10.7 Requirement for Laying Pipe [**24:**10.7]

10.7.1 Pipes, valves, hydrants, gaskets, and fittings shall be inspected for damage when received and shall be inspected prior to installation. *(See Figure 10.10.1.)* [**24:**10.7.1]

Copyright 2014 National Fire Protection Association (NFPA). Licensed, by agreement, for individual use and download on October 4, 2014 to LEADER and READER for designated user PATTARAPORN SRITRAKOOL. No other reproduction or transmission in any form permitted without written permission of NFPA. For inquires or to report unauthorized use, contact licensing@nfpa.org.

10.7.2 The torquing of bolted joints shall be checked. [**24:**10.7.2]

10.7.3 Pipe, valves, hydrants, and fittings shall be clean inside. [**24:**10.7.3]

10.7.4 When work is stopped, the open ends of pipe, valves, hydrants, and fittings shall be plugged to prevent stones and foreign materials from entering. [**24:**10.7.4]

10.7.5 All pipe, fittings, valves, and hydrants shall be carefully lowered into the trench using appropriate equipment and carefully examined for cracks or other defects while suspended above the trench. [**24:**10.7.5]

10.7.6 Plain ends shall be inspected for signs of damage prior to installation. [**24:**10.7.6]

10.7.7 Under no circumstances shall water main materials be dropped or dumped. [**24:**10.7.7]

10.7.8 Pipe shall not be rolled or skidded against other pipe materials. [**24:**10.7.8]

10.7.9 Pipes shall bear throughout their full length and shall not be supported by the bell ends only or by blocks. [**24:**10.7.9]

10.7.10 If ground is soft, or of a quicksand nature, special provisions shall be made for supporting pipe. [**24:**10.7.10]

10.7.11 Valves and fittings used with nonmetallic pipe shall be supported and restrained in accordance with the manufacturer's specifications. [**24:**10.7.11]

10.8 Joint Restraint. [**24:**10.8]

10.8.1 General. [**24:**10.8.1]

10.8.1.1* All tees, plugs, caps, bends, reducers, valves, and hydrant branches shall be restrained against movement by using thrust blocks in accordance with 10.8.2 or restrained joint systems in accordance with 10.8.3. [**24:**10.8.1.1]

10.8.1.2* Piping with fused, threaded, grooved, or welded joints shall not require additional restraining, provided that such joints can pass the hydrostatic test of 10.10.2.2 without shifting of piping or leakage in excess of permitted amounts. [**24:**10.8.1.2]

10.8.1.3 Steep Grades. On steep grades, mains shall be additionally restrained to prevent slipping. [**24:**10.8.1.3]

10.8.1.3.1 Pipe shall be restrained at the bottom of a hill and at any turns (lateral or vertical). [**24:**10.8.1.3.1]

10.8.1.3.2 The restraint specified in 10.8.1.3.1 shall be to natural rock or to suitable piers built on the downhill side of the bell. [**24:**10.8.1.3.2]

10.8.1.3.3 Bell ends shall be installed facing uphill. [**24:**10.8.1.3.3]

10.8.1.3.4 Straight runs on hills shall be restrained as determined by the design engineer. [**24:**10.8.1.3.4]

10.8.2* Thrust Blocks. [**24:**10.8.2]

10.8.2.1 Thrust blocks shall be considered satisfactory where soil is suitable for their use. [**24:**10.8.2.1]

10.8.2.2 Thrust blocks shall be of a concrete mix not leaner than one part cement, two and one-half parts sand, and five parts stone. [**24:**10.8.2.2]

10.8.2.3 Thrust blocks shall be placed between undisturbed earth and the fitting to be restrained and shall be capable of resisting the calculated thrust forces. [**24:**10.8.2.3]

10.8.2.4 Wherever possible, thrust blocks shall be placed so that the joints are accessible for repair. [**24:**10.8.2.4]

10.8.3* Restrained Joint Systems. Fire mains utilizing restrained joint systems shall include one or more of the following:

(1) Locking mechanical or push-on joints
(2) Mechanical joints utilizing setscrew retainer glands
(3) Bolted flange joints
(4) Heat-fused or welded joints
(5) Pipe clamps and tie rods
(6) Threaded or grooved joints
(7) Other approved methods or devices

[**24:**10.8.3]

10.8.3.1 Sizing Clamps, Rods, Bolts, and Washers. [**24:**10.8.3.1]

10.8.3.1.1 Clamps. [**24:**10.8.3.1.1]

10.8.3.1.1.1 Clamps shall have the following dimensions:

(1) ½ in. × 2 in. (12.7 mm × 50.8 mm) for 4 in. (102 mm) to 6 in. (152 mm) pipe
(2) ⅝ in. × 2½ in. (15.9 mm × 63.5 mm) for 8 in. (204 mm) to 10 in. (254 mm) pipe
(3) ⅝ in. × 3 in. (15.9 mm × 76.2 mm) for 12 in. (305 mm) pipe

[**24:**10.8.3.1.1.1]

10.8.3.1.1.2 The diameter of a bolt hole shall be 1⁄16 in. (1.6 mm) larger than that of the corresponding bolts. [**24:**10.8.3.1.1.2]

10.8.3.1.2 Rods. [**24:**10.8.3.1.2]

10.8.3.1.2.1 Rods shall be not less than ⅝ in. (15.9 mm) in diameter. [**24:**10.8.3.1.2.1]

10.8.3.1.2.2 Table 10.8.3.1.2.2 provides numbers of various diameter rods that shall be used for a given pipe size. [**24:**10.8.3.1.2.2]

Table 10.8.3.1.2.2 Rod Number — Diameter Combinations

Nominal Pipe Size (in.)	⅝ in. (15.9 mm)	¾ in. (19.1 mm)	⅞ in. (22.2 mm)	1 in. (25.4 mm)
4	2	—	—	—
6	2	—	—	—
8	3	2	—	—
10	4	3	2	—
12	6	4	3	2
14	8	5	4	3
16	10	7	5	4

Note: This table has been derived using pressure of 225 psi (15.5 bar) and design stress of 25,000 psi (172.4 MPa).
[**24:** Table 10.8.3.1.2.2]

Copyright 2014 National Fire Protection Association (NFPA). Licensed, by agreement, for individual use and download on October 4, 2014 to LEADER and READER for designated user PATTARAPORN SRITRAKOOL. No other reproduction or transmission in any form permitted without written permission of NFPA. For inquires or to report unauthorized use, contact licensing@nfpa.org.

10.8.3.1.2.3 When using bolting rods, the diameter of mechanical joint bolts shall limit the diameter of rods to ¾ in. (19.1 mm). [**24:**10.8.3.1.2.3]

10.8.3.1.2.4 Threaded sections of rods shall not be formed or bent. [**24:**10.8.3.1.2.4]

10.8.3.1.2.5 Where using clamps, rods shall be used in pairs for each clamp. [**24:**10.8.3.1.2.5]

10.8.3.1.2.6 Assemblies in which a restraint is made by means of two clamps canted on the barrel of the pipe shall be permitted to use one rod per clamp if approved for the specific installation by the authority having jurisdiction. [**24:**10.8.3.1.2.6]

10.8.3.1.2.7 Where using combinations of rods, the rods shall be symmetrically spaced. [**24:**10.8.3.1.2.7]

10.8.3.1.3 Clamp Bolts. Clamp bolts shall have the following diameters:

(1) ⅝ in. (15.9 mm) for pipe 4 in. (102 mm), 6 in. (152 mm), and 8 in. (204 mm)
(2) ¾ in. (19.1 mm) for 10 in. (254 mm) pipe
(3) ⅞ in. (22.2 mm) for 12 in. (305 mm) pipe

[**24:**10.8.3.1.3]

10.8.3.1.4 Washers. [**24:**10.8.3.1.4]

10.8.3.1.4.1 Washers shall be permitted to be cast iron or steel and round or square. [**24:**10.8.3.1.4.1]

10.8.3.1.4.2 Cast-iron washers shall have the following dimensions:

(1) ⅝ in. × 3 in. (15.9 mm × 76.2 mm) for 4 in. (102 mm), 6 in. (152 mm), 8 in. (204 mm), and 10 in. (254 mm) pipe
(2) ¾ in. × 3½ in. (19.1 mm × 88.9 mm) for 12 in. (305 mm) pipe

[**24:**10.8.3.1.4.2]

10.8.3.1.4.3 Steel washers shall have the following dimensions:

(1) ½ in. × 3 in. (12.7 mm × 76.2 mm) for 4 in. (102 mm), 6 in. (152 mm), 8 in. (204 mm), and 10 in. (254 mm) pipe
(2) ½ in. × 3½ in. (12.7 mm × 88.9 mm) for 12 in. (305 mm) pipe

[**24:**10.8.3.1.4.3]

10.8.3.1.4.4 The diameter of holes shall be ⅛ in. (3.2 mm) larger than that of rods. [**24:**10.8.3.1.4.4]

10.8.3.2 Sizes of Restraint Straps for Tees. [**24:**10.8.3.2]

10.8.3.2.1 Restraint straps for tees shall have the following dimensions:

(1) ⅝ in. (15.9 mm) thick and 2½ in. (63.5 mm) wide for 4 in. (102 mm), 6 in. (152 mm), 8 in. (204 mm), and 10 in. (254 mm) pipe
(2) ⅝ in. (15.9 mm) thick and 3 in. (76.2 mm) wide for 12 in. (305 mm) pipe

[**24:**10.8.3.2.1]

10.8.3.2.2 The diameter of rod holes shall be 1/16 in. (1.6 mm) larger than that of rods. [**24:**10.8.3.2.2]

10.8.3.2.3 Figure 10.8.3.2.3 and Table 10.8.3.2.3 shall be used in sizing the restraint straps for both mechanical and push-on joint tee fittings. [**24:**10.8.3.2.3]

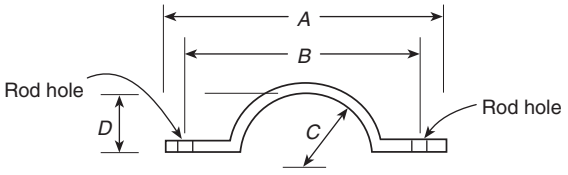

FIGURE 10.8.3.2.3 Restraint Straps for Tees. [24:Figure 10.8.3.2.3]

10.8.3.3 Sizes of Plug Strap for Bell End of Pipe. [**24:**10.8.3.3]

10.8.3.3.1 The strap shall be ¾ in. (19.1 mm) thick and 2½ in. (63.5 mm) wide. [**24:**10.8.3.3.1]

10.8.3.3.2 The strap length shall be the same as dimension *A* for tee straps as shown in Figure 10.8.3.2.3. [**24:**10.8.3.3.2]

10.8.3.3.3 The distance between the centers of rod holes shall be the same as dimension *B* for tee straps as shown in Figure 10.8.3.2.3. [**24:**10.8.3.3.3]

10.8.3.4 Material. Clamps, rods, rod couplings or turnbuckles, bolts, washers, restraint straps, and plug straps shall be of a material that has physical and chemical characteristics that indicate its deterioration under stress can be predicted with reliability. [**24:**10.8.3.4]

10.8.3.5* Corrosion Resistance. After installation, rods, nuts, bolts, washers, clamps, and other restraining devices shall be cleaned and thoroughly coated with a bituminous or other acceptable corrosion-retarding material. [**24:**10.8.3.5]

Table 10.8.3.2.3 Restraint Straps for Tees

Nominal Pipe Size (in.)	A		B		C		D	
	in.	mm	in.	mm	in.	mm	in.	mm
4	12½	318	10⅛	257	2½	64	1¾	44
6	14½	368	12⅛	308	3 9/16	90	2 13/16	71
8	16¾	425	14⅜	365	4 21/32	118	3 29/32	99
10	19 1/16	484	16 11/16	424	5¾	146	5	127
12	22 5/16	567	19 3/16	487	6¾	171	5⅞	149

[**24:** Table 10.8.3.2.3]

Copyright 2014 National Fire Protection Association (NFPA). Licensed, by agreement, for individual use and download on October 4, 2014 to LEADER and READER for designated user PATTARAPORN SRITRAKOOL. No other reproduction or transmission in any form permitted without written permission of NFPA. For inquires or to report unauthorized use, contact licensing@nfpa.org.

10.9 Backfilling. [**24:**10.9]

10.9.1 Backfill shall be tamped in layers or puddled under and around pipes to prevent settlement or lateral movement and shall contain no ashes, cinders, refuse, organic matter, or other corrosive materials. [**24:**10.9.1]

10.9.2 Rocks shall not be placed in trenches. [**24:**10.9.2]

10.9.3 Frozen earth shall not be used for backfilling. [**24:**10.9.3]

10.9.4 In trenches cut through rock, tamped backfill shall be used for at least 6 in. (150 mm) under and around the pipe and for at least 2 ft (0.6 m) above the pipe. [**24:**10.9.4]

10.10 Testing and Acceptance. [**24:**10.10]

10.10.1 Approval of Underground Piping. The installing contractor shall be responsible for the following:

(1) Notifying the authority having jurisdiction and the owner's representative of the time and date testing is to be performed
(2) Performing all required acceptance tests
(3) Completing and signing the contractor's material and test certificate(s) shown in Figure 10.10.1.

[**24:**10.10.1]

10.10.2 Acceptance Requirements. [**24:**10.10.2]

10.10.2.1* Flushing of Piping. [**24:**10.10.2.1]

10.10.2.1.1 Underground piping, from the water supply to the system riser, and lead-in connections to the system riser shall be completely flushed before connection is made to downstream fire protection system piping. [**24:**10.10.2.1.1]

10.10.2.1.2 The flushing operation shall be continued for a sufficient time to ensure thorough cleaning. [**24:**10.10.2.1.2]

10.10.2.1.3 The minimum rate of flow shall be not less than one of the following:

(1) Hydraulically calculated water demand rate of the system, including any hose requirements
(2)*Flow in accordance with Table 10.10.2.1.3
(3) Maximum flow rate available to the system under fire conditions

[**24:**10.10.2.1.3]

10.10.2.1.4 Provision shall be made for the proper disposal of water used for flushing or testing. [**24:** Table 10.10.2.1.3]

10.10.2.2 Hydrostatic Test. [**24:**10.10.2.2]

10.10.2.2.1* All piping and attached appurtenances subjected to system working pressure shall be hydrostatically tested at 200 psi (13.8 bar) or 50 psi (3.5 bar) in excess of the system working pressure, whichever is greater, and shall maintain that pressure ±5 psi (0.35 bar) for 2 hours. [**24:**10.10.2.2.1]

10.10.2.2.2 Pressure loss shall be determined by a drop in gauge pressure or visual leakage. [**24:**10.10.2.2.2]

10.10.2.2.3 The test pressure shall be read from one of the following, located at the lowest elevation of the system or the portion of the system being tested: [**24:**10.10.2.2.3]

(1) A gauge located at one of the hydrant outlets
(2) A gauge located at the lowest point where no hydrants are provided

10.10.2.2.4* The trench shall be backfilled between joints before testing to prevent movement of pipe.

10.10.2.2.5 Where required for safety measures presented by the hazards of open trenches, the pipe and joints shall be permitted to be backfilled, provided the installing contractor takes the responsibility for locating and correcting leakage.

10.10.2.2.6* Hydrostatic Testing Allowance. Where additional water is added to the system to maintain the test pressures required by 10.10.2.2.1, the amount of water shall be measured and shall not exceed the limits of Table 10.10.2.2.6, which are based upon the following equation:

U.S. Customary Units:

$$L = \frac{SD\sqrt{P}}{148{,}000} \qquad \textbf{[10.10.2.2.6(a)]}$$

where:
L = testing allowance (makeup water) [gph (gal/hr)]
S = length of pipe tested (ft)
D = nominal diameter of the pipe (in.)
P = average test pressure during hydrostatic test (gauge psi)

Metric Units:

$$L = \frac{SD\sqrt{P}}{794{,}797} \qquad \textbf{[10.10.2.2.6(b)]}$$

where:
L = testing allowance (makeup water) (L/hr)
S = length of pipe tested (m)
D = nominal diameter of pipe (mm)
P = average test pressure during the hydrostatic test (kPa)

[**24:**10.10.2.2.4]

10.10.2.3 Other Means of Hydrostatic Tests. Where required by the authority having jurisdiction, hydrostatic tests shall be permitted to be completed in accordance with the requirements of AWWA C600, AWWA C602, AWWA C603, and AWWA C900. [**24:**10.10.2.3]

10.10.2.4 Operating Test. [**24:**10.10.2.4]

10.10.2.4.1 Each hydrant shall be fully opened and closed under system water pressure. [**24:**10.10.2.4.1]

10.10.2.4.2 Dry barrel hydrants shall be checked for proper drainage. [**24:**10.10.2.4.2]

10.10.2.4.3 All control valves shall be fully closed and opened under system water pressure to ensure proper operation. [**24:**10.10.2.4.3]

10.10.2.4.4 Where fire pumps are available, the operating tests required by 10.10.2.4 shall be completed with the pumps running. [**24:**10.10.2.4.4]

10.10.2.5 Backflow Prevention Assemblies. [**24:**10.10.2.5]

10.10.2.5.1 The backflow prevention assembly shall be forward flow tested to ensure proper operation. [**24:**10.10.2.5.1]

10.10.2.5.2 The minimum flow rate required by 10.10.2.5.1 shall be the system demand, including hose stream demand where applicable. [**24:**10.10.2.5.2]

Copyright 2014 National Fire Protection Association (NFPA). Licensed, by agreement, for individual use and download on October 4, 2014 to LEADER and READER for designated user PATTARAPORN SRITRAKOOL. No other reproduction or transmission in any form permitted without written permission of NFPA. For inquires or to report unauthorized use, contact licensing@nfpa.org.

Contractor's Material and Test Certificate for Underground Piping

PROCEDURE

Upon completion of work, inspection and tests shall be made by the contractor's representative and witnessed by an owner's representative. All defects shall be corrected and system left in service before contractor's personnel finally leave the job.

A certificate shall be filled out and signed by both representatives. Copies shall be prepared for approving authorities, owners, and contractor. It is understood the owner's representative's signature in no way prejudices any claim against contractor for faulty material, poor workmanship, or failure to comply with approving authority's requirements or local ordinances.

Property name	Date
Property address	

Plans	Accepted by approving authorities (names)		
	Address		
	Installation conforms to accepted plans	❑ Yes	❑ No
	Equipment used is approved If no, state deviations	❑ Yes	❑ No
Instructions	Has person in charge of fire equipment been instructed as to location of control valves and care and maintenance of this new equipment? If no, explain	❑ Yes	❑ No
	Have copies of appropriate instructions and care and maintenance charts been left on premises? If no, explain	❑ Yes	❑ No
Location	Supplies buildings		
Underground pipes and joints	Pipe types and class / Type joint		
	Pipe conforms to _____ standard Fittings conform to _____ standard If no, explain	❑ Yes ❑ Yes	❑ No ❑ No
	Joints needing anchorage clamped, strapped, or blocked in accordance with _____ standard If no, explain	❑ Yes	❑ No
Test description	Flushing: Flow the required rate until water is clear as indicated by no collection of foreign material in burlap bags at outlets such as hydrants and blow-offs. Flush at one of the flow rates as specified in 10.10.2.1.3. Hydrostatic: All piping and attached appurtenances subjected to system working pressure shall be hydrostatically tested at 200 psi (13.8 bar) or 50 psi (3.5 bar) in excess of the system working pressure, whichever is greater, and shall maintain that pressure ±5 psi (0.35 bar) for 2 hours. Hydrostatic Testing Allowance: Where additional water is added to the system to maintain the test pressures required by 10.10.2.2.1, the amount of water shall be measured and shall not exceed the limits of the following equation (for metric equation, see 10.10.2.2.6): $L = \frac{SD\sqrt{P}}{148{,}000}$ L = testing allowance (makeup water), in gallons per hour S = length of pipe tested, in feet D = nominal diameter of the pipe, in inches P = average test pressure during the hydrostatic test, in pounds per square inch (gauge)		
Flushing tests	New underground piping flushed according to _____ standard by (company) If no, explain	❑ Yes	❑ No
	How flushing flow was obtained: ❑ Public water ❑ Tank or reservoir ❑ Fire pump / Through what type opening: ❑ Hydrant butt ❑ Open pipe		
	Lead-ins flushed according to _____ standard by (company) If no, explain	❑ Yes	❑ No
	How flushing flow was obtained: ❑ Public water ❑ Tank or reservoir ❑ Fire pump / Through what type opening: ❑ Y connection to flange and spigot ❑ Open pipe		

© 2012 National Fire Protection Association NFPA 13 (p. 1 of 2)

FIGURE 10.10.1 Sample of Contractor's Material and Test Certificate for Underground Piping. [24: Figure 10.10.1]

Copyright 2014 National Fire Protection Association (NFPA). Licensed, by agreement, for individual use and download on October 4, 2014 to LEADER and READER for designated user PATTARAPORN SRITRAKOOL. No other reproduction or transmission in any form permitted without written permission of NFPA. For inquires or to report unauthorized use, contact licensing@nfpa.org.

Hydrostatic test	All new underground piping hydrostatically tested at _____ psi for _____ hours		Joints covered ❑ Yes ❑ No
Leakage test	Total amount of leakage measured _____ gallons _____ hours		
	Allowable leakage _____ gallons _____ hours		
Forward flow test of backflow preventer	Foward flow test performed in accordance with 10.10.2.5.2:		❑ Yes ❑ No
Hydrants	Number installed	Type and make	All operate satisfactorily ❑ Yes ❑ No
Control valves	Water control valves left wide open If no, state reason		❑ Yes ❑ No
	Hose threads of fire department connections and hydrants interchangeable with those of fire department answering alarm		❑ Yes ❑ No
Remarks	Date left in service		
Signatures	Name of installing contractor		
	Tests witnessed by		
	For property owner (signed)	Title	Date
	For installing contractor (signed)	Title	Date

Additional explanation and notes

© 2012 National Fire Protection Association NFPA 13 (p. 2 of 2)

FIGURE 10.10.1 ***Continued***

Copyright 2014 National Fire Protection Association (NFPA). Licensed, by agreement, for individual use and download on October 4, 2014 to LEADER and READER for designated user PATTARAPORN SRITRAKOOL. No other reproduction or transmission in any form permitted without written permission of NFPA. For inquires or to report unauthorized use, contact licensing@nfpa.org.

Table 10.10.2.1.3 Flow Required to Produce a Velocity of 10 ft/sec (3 m/sec) in Pipes

Pipe Size		Flow Rate	
in.	mm	gpm	L/min
2	51	100	379
2½	63	150	568
3	76	220	833
4	102	390	1,476
5	127	610	2,309
6	152	880	3,331
8	203	1,560	5,905
10	254	2,440	9,235
12	305	3,520	13,323

[**24:** Table 10.10.2.1.3]

Table 10.10.2.2.6 Hydrostatic Testing Allowance at 200 psi (gph/100 ft of Pipe)

Nominal Pipe Diameter (in.)	Testing Allowance
2	0.019
4	0.038
6	0.057
8	0.076
10	0.096
12	0.115
14	0.134
16	0.153
18	0.172
20	0.191
24	0.229

Notes:
(1) For other length, diameters, and pressures, utilize Equation 10.10.2.2.6(a) or 10.10.2.2.6(b) to determine the appropriate testing allowance.
(2) For test sections that contain various sizes and sections of pipe, the testing allowance is the sum of the testing allowances for each size and section.
[**24:** Table 10.10.2.2.6]

Chapter 11 Design Approaches

11.1 General. The requirements of Section 11.1 shall apply to all sprinkler systems unless modified by a specific section of Chapter 11 or Chapter 12.

11.1.1 A building or portion thereof shall be permitted to be protected in accordance with any applicable design approach at the discretion of the designer.

11.1.2* Adjacent Hazards or Design Methods. For buildings with two or more adjacent hazards or design methods, the following shall apply:

(1) Where areas are not physically separated by a barrier or partition capable of delaying heat from a fire in one area from fusing sprinklers in the adjacent area, the required sprinkler protection for the more demanding design basis shall extend 15 ft (4.6 m) beyond its perimeter.
(2) The requirements of 11.1.2(1) shall not apply where the areas are separated by a barrier partition that is capable of preventing heat from a fire in one area from fusing sprinklers in the adjacent area.
(3) The requirements of 11.1.2(1) shall not apply to the extension of more demanding criteria from an upper ceiling level to beneath a lower ceiling level where the difference in height between the ceiling levels is at least 2 ft (0.6 m).

11.1.3 For hydraulically calculated systems, the total system water supply requirements for each design basis shall be determined in accordance with the procedures of Section 23.4 unless modified by a section of Chapter 11 or Chapter 12.

11.1.4 Water Demand.

11.1.4.1* The water demand requirements shall be determined from the following:

(1) Occupancy hazard fire control approach and special design approaches of Chapter 11
(2) Storage design approaches of Chapter 12 through Chapter 20
(3) Special occupancy approaches of Chapter 22

11.1.4.2* The minimum water demand requirements for a sprinkler system shall be determined by adding the hose stream allowance to the water demand for sprinklers.

11.1.5 Water Supplies.

11.1.5.1 The minimum water supply shall be available for the minimum duration specified in Chapter 11.

11.1.5.2* Tanks shall be sized to supply the equipment that they serve.

11.1.5.3* Pumps shall be sized to supply the equipment that they serve.

11.1.6 Hose Allowance.

11.1.6.1 Systems with Multiple Hazard Classifications. For systems with multiple hazard classifications, the hose stream allowance and water supply duration shall be in accordance with one of the following:

(1) The water supply requirements for the highest hazard classification within the system shall be used.
(2) The water supply requirements for each individual hazard classification shall be used in the calculations for the design area for that hazard.
(3) *For systems with multiple hazard classifications where the higher classification only lies within single rooms less than or equal to 400 ft^2 (37.2 m^2) in area with no such rooms adjacent, the water supply requirements for the principal occupancy shall be used for the remainder of the system.

11.1.6.2* Water allowance for outside hose shall be added to the sprinkler requirement at the connection to the city main or a private fire hydrant, whichever is closer to the system riser.

11.1.6.3 Where inside hose connections are planned or are required, the following shall apply:

(1) A total water allowance of 50 gpm (189 L/min) for a single hose connection installation shall be added to the sprinkler requirements.
(2) A total water allowance of 100 gpm (379 L/min) for a multiple hose connection installation shall be added to the sprinkler requirements.

Copyright 2014 National Fire Protection Association (NFPA). Licensed, by agreement, for individual use and download on October 4, 2014 to LEADER and READER for designated user PATTARAPORN SRITRAKOOL. No other reproduction or transmission in any form permitted without written permission of NFPA. For inquires or to report unauthorized use, contact licensing@nfpa.org.

(3) The water allowance shall be added in 50 gpm (189 L/min) increments beginning at the most remote hose connection, with each increment added at the pressure required by the sprinkler system design at that point.

11.1.6.4* When hose valves for fire department use are attached to wet pipe sprinkler system risers in accordance with 8.17.5.2, the following shall apply:

(1) The sprinkler system demand shall not be required to be added to standpipe demand as determined from NFPA 14.
(2) Where the combined sprinkler system demand and hose stream allowance of Table 11.2.3.1.2 exceeds the requirements of NFPA 14, this higher demand shall be used.
(3) For partially sprinklered buildings, the sprinkler demand, not including hose stream allowance, as indicated in Figure 11.2.3.1.1 shall be added to the requirements given in NFPA 14.

11.1.7* High Volume Low Speed (HVLS) Fans. The installation of HVLS fans in buildings equipped with sprinklers, including ESFR sprinklers, shall comply with the following:

(1) The maximum fan diameter shall be 24 ft (7.3 m).
(2) The HVLS fan shall be centered approximately between four adjacent sprinklers.
(3) The vertical clearance from the HVLS fan to sprinkler deflector shall be a minimum of 3 ft (0.9 m).
(4) All HVLS fans shall be interlocked to shut down immediately upon receiving a waterflow signal from the alarm system in accordance with the requirements of *NFPA 72*.

11.2 Occupancy Hazard Fire Control Approach for Spray Sprinklers.

11.2.1 General.

11.2.1.1* The water demand requirements shall be determined by either the pipe schedule method in accordance with 11.2.2 or the hydraulic calculation method in accordance with 11.2.3.

11.2.1.2 Occupancy Classifications.

11.2.1.2.1 Occupancy classifications for this standard shall relate to sprinkler installations and their water supplies only.

11.2.1.2.2 Occupancy classifications shall not be used as a general classification of occupancy hazards.

11.2.1.2.3 Occupancies or portions of occupancies shall be classified according to the quantity and combustibility of contents, the expected rates of heat release, the total potential for energy release, the heights of stockpiles, and the presence of flammable and combustible liquids, using the definitions contained in Section 5.2 through Section 5.5.

11.2.1.2.4 Classifications shall be as follows:

(1) Light hazard
(2) Ordinary hazard (Groups 1 and 2)
(3) Extra hazard (Groups 1 and 2)
(4) Special occupancy hazard *(see Chapter 22)*

11.2.2 Water Demand Requirements — Pipe Schedule Method.

11.2.2.1 Table 11.2.2.1 shall be used in determining the minimum water supply requirements for light and ordinary hazard occupancies protected by systems with pipe sized according to the pipe schedules of Section 23.5.

11.2.2.2 Pressure and flow requirements for extra hazard occupancies shall be based on the hydraulic calculation methods of 11.2.3.

Table 11.2.2.1 Water Supply Requirements for Pipe Schedule Sprinkler Systems

Occupancy Classification	Minimum Residual Pressure Required		Acceptable Flow at Base of Riser (Including Hose Stream Allowance)		Duration (minutes)
	psi	bar	gpm	L/min	
Light hazard	15	1	500–750	1893–2839	30–60
Ordinary hazard	20	1.4	850–1500	3218–5678	60–90

11.2.2.3 The pipe schedule method shall be permitted as follows:

(1) Additions or modifications to existing pipe schedule systems sized according to the pipe schedules of Section 23.5
(2) Additions or modifications to existing extra hazard pipe schedule systems
(3) New systems of 5000 ft^2 (465 m^2) or less
(4) New systems exceeding 5000 ft^2 (465 m^2) where the flows required in Table 11.2.2.1 are available at a minimum residual pressure of 50 psi (3.4 bar) at the highest elevation of sprinkler

11.2.2.4 Table 11.2.2.1 shall be used in determining the minimum water supply requirements.

11.2.2.5 The lower duration value of Table 11.2.2.1 shall be acceptable only where the sprinkler system waterflow alarm device(s) and supervisory device(s) are electrically supervised and such supervision is monitored at an approved, constantly attended location.

11.2.2.6* Residual Pressure.

11.2.2.6.1 The residual pressure requirement of Table 11.2.2.1 shall be met at the elevation of the highest sprinkler.

11.2.2.6.2 Friction Loss Due to Backflow Prevention Valves.

11.2.2.6.2.1 When backflow prevention valves are installed on pipe schedule systems, the friction losses of the device shall be accounted for when determining acceptable residual pressure at the top level of sprinklers.

11.2.2.6.2.2 The friction loss of this device [in psi (bar)] shall be added to the elevation loss and the residual pressure at the top row of sprinklers to determine the total pressure needed at the water supply.

11.2.2.7 The lower flow figure of Table 11.2.2.1 shall be permitted only where the building is of noncombustible construction or the potential areas of fire are limited by building size or compartmentation such that no open areas exceed 3000 ft^2 (279 m^2) for light hazard or 4000 ft^2 (372 m^2) for ordinary hazard.

11.2.3 Water Demand Requirements — Hydraulic Calculation Methods.

11.2.3.1 General.

11.2.3.1.1 The water demand for sprinklers shall be determined only from one of the following, at the discretion of the designer:

(1) Density/area curves of Figure 11.2.3.1.1 in accordance with the density/area method of 11.2.3.2

Copyright 2014 National Fire Protection Association (NFPA). Licensed, by agreement, for individual use and download on October 4, 2014 to LEADER and READER for designated user PATTARAPORN SRITRAKOOL. No other reproduction or transmission in any form permitted without written permission of NFPA. For inquires or to report unauthorized use, contact licensing@nfpa.org.

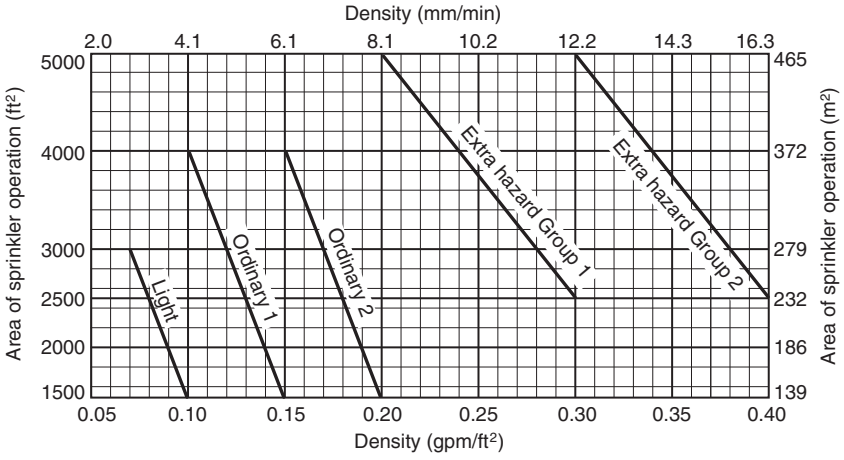

FIGURE 11.2.3.1.1 Density/Area Curves.

(2) The room that creates the greatest demand in accordance with the room design method of 11.2.3.3
(3) Special design areas in accordance with 11.2.3.4

11.2.3.1.2 The minimum water supply shall be available for the minimum duration specified in Table 11.2.3.1.2.

11.2.3.1.3 The lower duration values in Table 11.2.3.1.2 shall be permitted where the sprinkler system waterflow alarm device(s) and supervisory device(s) are electrically supervised and such supervision is monitored at an approved, constantly attended location.

11.2.3.1.4 Restrictions. When either the density/area method or room design method is used, the following shall apply:

(1)*For areas of sprinkler operation less than 1500 ft^2 (139 m^2) used for light and ordinary hazard occupancies, the density for 1500 ft^2 (139 m^2) shall be used.
(2) For areas of sprinkler operation less than 2500 ft^2 (232 m^2) for extra hazard occupancies, the density for 2500 ft^2 (232 m^2) shall be used.
(3)*Unless the requirements of 11.2.3.1.4(4) are met for buildings having unsprinklered combustible concealed spaces, as described in 8.15.1.2 and 8.15.6, the minimum area of sprinkler operation for that portion of the building shall be 3000 ft^2 (279 m^2). The design area of 3000 ft^2 (279 m^2) shall be applied only to the sprinkler system or portions of the sprinkler system that are adjacent to the qualifying combustible concealed space. The term *adjacent* shall apply to any sprinkler system protecting a space above, below, or next to the qualifying concealed space except where a barrier with a fire resistance rating at least equivalent to the water supply duration completely separates the concealed space from the sprinklered area.
(4) The following unsprinklered concealed spaces shall not require a minimum area of sprinkler operation of 3000 ft^2 (279 m^2):
  (a) Noncombustible and limited-combustible concealed spaces with minimal combustible loading having no access. The space shall be considered a concealed space even with small openings such as those used as return air for a plenum.
  (b) Noncombustible and limited-combustible concealed spaces with limited access and not permitting occupancy or storage of combustibles. The space shall be considered a concealed space even with small openings such as those used as return air for a plenum.
  (c) Combustible concealed spaces filled entirely with noncombustible insulation.
  (d)*Light or ordinary hazard occupancies where noncombustible or limited-combustible ceilings are directly attached to the bottom of solid wood joists or solid limited-combustible construction or noncombustible construction so as to create enclosed joist spaces 160 ft^3 (4.5 m^3) or less in volume, including space below insulation that is laid directly on top or within the ceiling joists in an otherwise sprinklered concealed space.
  (e) Concealed spaces where rigid materials are used and the exposed surfaces have a flame spread index of 25 or less and the materials have been demonstrated to not propagate fire more than 10.5 ft (3.2 m) when tested in accordance with ASTM E 84, *Standard Test Method of Surface Burning Characteristics of Building Materials,* or ANSI/UL 723, *Standard for Test for Surface Burning Characteristics of Building Materials,* extended for an additional 20 minutes in the form in which they are installed in the space.

Table 11.2.3.1.2 Hose Stream Allowance and Water Supply Duration Requirements for Hydraulically Calculated Systems

Occupancy	Inside Hose		Total Combined Inside and Outside Hose		Duration (minutes)
	gpm	L/min	gpm	L/min	
Light hazard	0, 50, or 100	0, 189, or 379	100	379	30
Ordinary hazard	0, 50, or 100	0, 189, or 379	250	946	60–90
Extra hazard	0, 50, or 100	0, 189, or 379	500	1893	90–120

Copyright 2014 National Fire Protection Association (NFPA). Licensed, by agreement, for individual use and download on October 4, 2014 to LEADER and READER for designated user PATTARAPORN SRITRAKOOL. No other reproduction or transmission in any form permitted without written permission of NFPA. For inquires or to report unauthorized use, contact licensing@nfpa.org.

(f) Concealed spaces in which the exposed materials are constructed entirely of fire-retardant treated wood as defined by NFPA 703.
(g) Concealed spaces over isolated small rooms not exceeding 55 ft^2 (5.1 m^2) in area.
(h) Vertical pipe chases under 10 ft^2 (0.93 m^2), provided that in multifloor buildings the chases are firestopped at each floor using materials equivalent to the floor construction, and where such pipe chases shall contain no sources of ignition, piping shall be noncombustible, and pipe penetrations at each floor shall be properly sealed.
(i) Exterior columns under 10 ft^2 (0.93 m^2) in area formed by studs or wood joists, supporting exterior canopies that are fully protected with a sprinkler system.
(j)*Light or ordinary hazard occupancies where noncombustible or limited-combustible ceilings are attached to the bottom of composite wood joists either directly or on to metal channels not exceeding 1 in. (25.4 mm) in depth, provided the adjacent joist channels are firestopped into volumes not exceeding 160 ft^3 (4.5 m^3) using materials equivalent to ½ in. (12.7 mm) gypsum board and at least 3½ in. (90 mm) of batt insulation is installed at the bottom of the joist channels when the ceiling is attached utilizing metal channels.

11.2.3.2 Density/Area Method.

11.2.3.2.1 Water Supply.

11.2.3.2.1.1 The water supply requirement for sprinklers only shall be calculated from the density/area curves of Figure 11.2.3.1.1 or from Chapter 22 where density/area criteria are specified for special occupancy hazards.

11.2.3.2.1.2 When using Figure 11.2.3.1.1, the calculations shall satisfy any single point on the appropriate density/area curve.

11.2.3.2.1.3 When using Figure 11.2.3.1.1, it shall not be necessary to meet all points on the selected curves.

11.2.3.2.2 Sprinklers.

11.2.3.2.2.1 The densities and areas provided in Figure 11.2.3.1.1 shall be for use only with spray sprinklers.

11.2.3.2.2.2 Quick-response sprinklers shall not be permitted for use in extra hazard occupancies or other occupancies where there are substantial amounts of flammable liquids or combustible dusts.

11.2.3.2.2.3 For extended coverage sprinklers, the minimum design area shall be that corresponding to the hazard in Figure 11.2.3.1.1 or the area protected by five sprinklers, whichever is greater.

11.2.3.2.2.4 Extended coverage sprinklers shall be listed with and designed for the minimum flow corresponding to the density for the hazard as specified in Figure 11.2.3.1.1.

11.2.3.2.3 Quick-Response Sprinklers.

11.2.3.2.3.1 Where listed quick-response sprinklers, including extended coverage quick-response sprinklers, are used throughout a system or portion of a system having the same hydraulic design basis, the system area of operation shall be permitted to be reduced without revising the density as indicated in Figure 11.2.3.2.3.1 when all of the following conditions are satisfied:

(1) Wet pipe system
(2) Light hazard or ordinary hazard occupancy
(3) 20 ft (6.1 m) maximum ceiling height
(4) There are no unprotected ceiling pockets as allowed by 8.6.7 and 8.8.7 exceeding 32 ft^2 (3 m^2)

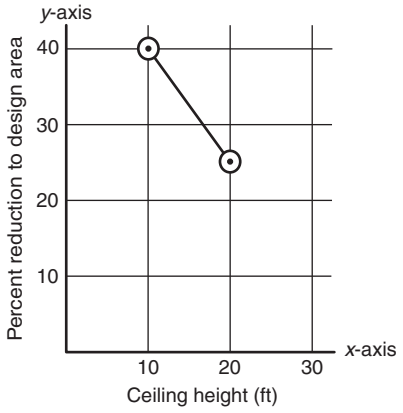

Note: $y = \frac{-3x}{2} + 55$

For ceiling height ≥10 ft and ≤20 ft, $y = \frac{-3x}{2} + 55$
For ceiling height <10 ft, $y = 40$
For ceiling height >20, $y = 0$
For SI units, 1 ft = 0.31 m.

FIGURE 11.2.3.2.3.1 Design Area Reduction for Quick-Response Sprinklers.

11.2.3.2.3.2 The number of sprinklers in the design area shall never be less than five.

11.2.3.2.3.3 Where quick-response sprinklers are used on a sloped ceiling or roof, the maximum ceiling or roof height shall be used for determining the percent reduction in design area.

11.2.3.2.4 Sloped Ceilings. The system area of operation shall be increased by 30 percent without revising the density when the following types of sprinklers are used on sloped ceilings with a pitch exceeding 1 in 6 (a rise of 2 units in a run of 12 units, a roof slope of 16.7 percent) in nonstorage applications:

(1) Spray sprinklers, including extended coverage sprinklers listed in accordance with 8.4.3(4), and quick-response sprinklers
(2) CMSA sprinklers

11.2.3.2.5* Dry Pipe and Double Interlock Preaction Systems. For dry pipe systems and double interlock preaction systems, the area of sprinkler operation shall be increased by 30 percent without revising the density.

11.2.3.2.6 High-Temperature Sprinklers. Where high-temperature sprinklers are used for extra hazard occupancies, the area of sprinkler operation shall be permitted to be reduced by 25 percent without revising the density, but not to less than 2000 ft^2 (186 m^2).

11.2.3.2.7* Multiple Adjustments.

11.2.3.2.7.1 Where multiple adjustments to the area of operation are required to be made in accordance with 11.2.3.2.3, 11.2.3.2.4, 11.2.3.2.5, or 11.2.3.2.6, these adjustments shall be

Copyright 2014 National Fire Protection Association (NFPA). Licensed, by agreement, for individual use and download on October 4, 2014 to LEADER and READER for designated user PATTARAPORN SRITRAKOOL. No other reproduction or transmission in any form permitted without written permission of NFPA. For inquires or to report unauthorized use, contact licensing@nfpa.org.

compounded based on the area of operation originally selected from Figure 11.2.3.1.1.

11.2.3.2.7.2 If the building has unsprinklered combustible concealed spaces, the rules of 11.2.3.1.4 shall be applied after all other modifications have been made.

11.2.3.3 Room Design Method.

11.2.3.3.1* The water supply requirements for sprinklers only shall be based upon the room that creates the greatest demand.

11.2.3.3.2 The density selected shall be that from Figure 11.2.3.1.1 corresponding to the occupancy hazard classification and room size.

11.2.3.3.3 To utilize the room design method, all rooms shall be enclosed with walls having a fire-resistance rating equal to the water supply duration indicated in Table 11.2.3.1.2.

11.2.3.3.4 If the room is smaller than the area specified in Figure 11.2.3.1.1, the provisions of 11.2.3.1.4(1) and 11.2.3.1.4(2) shall apply.

11.2.3.3.5 Minimum protection of openings shall be as follows:

(1) Light hazard — Nonrated automatic or self-closing doors.
(2) Light hazard with no opening protection — Where openings are not protected, calculations shall include the sprinklers in the room plus two sprinklers in the communicating space nearest each such unprotected opening unless the communicating space has only one sprinkler, in which case calculations shall be extended to the operation of that sprinkler. The selection of the room and communicating space sprinklers to be calculated shall be that which produces the greatest hydraulic demand. For light hazard occupancies with unprotected openings in walls, a minimum lintel of depth of 8 in. (203 mm) is required for openings and the opening shall not exceed 8 ft (2.44 m) in width. It shall be permitted to have a single opening of 36 in. (914 mm) or less without a lintel, provided there are no other openings to adjoining spaces.
(3) Ordinary and extra hazard — Automatic or self-closing doors with appropriate fire resistance ratings for the enclosure.

11.2.3.3.6 Where the room design method is used and the area under consideration is a corridor protected by a single row of sprinklers with protected openings in accordance with 11.2.3.3.5, the maximum number of sprinklers that needs to be calculated is five or, when extended coverage sprinklers are installed, all sprinklers contained within 75 linear feet (22.9 linear meters) of the corridor.

11.2.3.3.7 Where the area under consideration is a corridor protected by a single row of sprinklers with unprotected openings, in a light hazard occupancy, the design area shall include all sprinklers in the corridor to a maximum of five or, when extended coverage sprinklers are installed, all sprinklers within 75 linear feet (22.9 linear meters) of the corridor.

11.2.3.4 Special Design Areas.

11.2.3.4.1 Where the design area consists of a building service chute supplied by a separate riser, the maximum number of sprinklers that needs to be calculated is three, each with a minimum discharge of 15 gpm (57 L/min).

11.2.3.4.2* Where an area is to be protected by a single line of sprinklers, the design area shall include all sprinklers on the line up to a maximum of seven.

11.2.3.4.3 Sprinklers in ducts as described in Section 7.10 and 8.15.13 shall be hydraulically designed to provide a discharge pressure of not less than 7 psi (0.5 bar) at each sprinkler with all sprinklers within the duct flowing.

11.3 Special Design Approaches.

11.3.1 Residential Sprinklers.

11.3.1.1* The design area shall be the area that includes the four adjacent sprinklers that produce the greatest hydraulic demand.

11.3.1.2* Unless the requirements of 11.2.3.1.4(4) are met for buildings having unsprinklered combustible concealed spaces, as described in 8.15.1.2 and 8.15.6, the minimum design area of sprinkler operation for that portion of the building shall be eight sprinklers.

11.3.1.2.1* The design area of eight sprinklers shall be applied only to the portion of the residential sprinklers that are adjacent to the qualifying combustible concealed space.

11.3.1.2.2 The term *adjacent* shall apply to any sprinkler system protecting a space above, below, or next to the qualifying concealed space except where a barrier with a fire resistance rating at least equivalent to the water supply duration completely separates the concealed space from the sprinklered area.

11.3.1.3 Unless the requirements of 11.3.1.4 are met, the minimum required discharge from each of the four hydraulically most demanding sprinklers shall be the greater of the following:

(1) In accordance with minimum flow rates indicated in individual listings
(2) Calculated based on delivering a minimum of 0.1 gpm/ft^2 (4.1 mm/min) over the design area in accordance with the provisions of 8.5.2.1 or 8.6.2.1.2

11.3.1.4 For modifications or additions to existing systems equipped with residential sprinklers, the listed discharge criteria less than 0.1 gpm/ft^2 (4.1 mm/min) shall be permitted to be used.

11.3.1.5 Where areas such as attics, basements, or other types of occupancies are outside of dwelling units but within the same structure, these areas shall be protected as a separate design basis in accordance with Section 11.1.

11.3.1.6 Hose stream allowance and water supply duration requirements shall be in accordance with those for light hazard occupancies in Table 11.2.3.1.2.

11.3.2 Exposure Protection.

11.3.2.1* Piping shall be hydraulically calculated in accordance with Section 23.4 to furnish a minimum of 7 psi (0.5 bar) at any sprinkler with all sprinklers facing the exposure operating.

11.3.2.2 Where the water supply feeds other fire protection systems, it shall be capable of furnishing total demand for such systems as well as the exposure system demand.

11.3.3 Water Curtains.

11.3.3.1 Sprinklers in a water curtain such as described in 8.15.4 or 8.15.17.2 shall be hydraulically designed to provide a discharge of 3 gpm per lineal foot (37 L/min per lineal meter) of water curtain, with no sprinklers discharging less than 15 gpm (56.8 L/min).

Copyright 2014 National Fire Protection Association (NFPA). Licensed, by agreement, for individual use and download on October 4, 2014 to LEADER and READER for designated user PATTARAPORN SRITRAKOOL. No other reproduction or transmission in any form permitted without written permission of NFPA. For inquires or to report unauthorized use, contact licensing@nfpa.org.

11.3.3.2 For water curtains employing automatic sprinklers, the number of sprinklers calculated in this water curtain shall be the number in the length corresponding to the length parallel to the branch lines in the area determined by 23.4.4.1.1.

11.3.3.3 If a single fire can be expected to operate sprinklers within the water curtain and within the design area of a hydraulically calculated system, the water supply to the water curtain shall be added to the water demand of the hydraulic calculations and shall be balanced to the calculated area demand.

11.3.3.4 Hydraulic design calculations shall include a design area selected to include ceiling sprinklers adjacent to the water curtain.

11.3.4 Sprinklers Under Roof or Ceiling in Combustible Concealed Spaces of Wood Joist or Wood Truss Construction with Members 3 ft (914 mm) or Less on Center and Slope Having Pitch of 4 in 12 or Greater.

11.3.4.1 Where sprinkler spacing does not exceed 8 ft (2.5 m) measured perpendicular to the slope, the minimum sprinkler discharge pressure shall be 7 psi (0.5 bar).

11.3.4.2 Where sprinkler spacing exceeds 8 ft (2.5 m) measured perpendicular to the slope, the minimum sprinkler discharge pressure shall be 20 psi (1.4 bar).

11.3.4.3 Hose stream allowance and water supply duration requirements shall be in accordance with those for light hazard occupancies in Table 11.2.3.1.2.

Chapter 12 General Requirements for Storage

12.1 General. The requirements of Section 12.1 shall apply to all storage arrangements and commodities other than miscellaneous storage *(see Chapter 13)* and as modified by specific sections in Chapter 14 through Chapter 20.

12.1.1 Roof Vents and Draft Curtains. See Section C.6.

12.1.1.1* Manually operated roof vents or automatic roof vents with operating elements that have a higher temperature classification than the automatic sprinklers shall be permitted.

12.1.1.2 Early suppression fast-response (ESFR) sprinklers shall not be used in buildings with automatic heat or smoke vents unless the vents use a high-temperature rated, standard-response operating mechanism.

12.1.1.3* Draft curtains shall not be used within ESFR sprinkler systems.

12.1.1.3.1 Draft curtains separating ESFR sprinklers at system breaks or from control mode sprinklers or between hazards shall be permitted. *(See 8.4.6.4.)*

12.1.2 Ceiling Slope. The sprinkler system criteria specified in Chapter 12 and Chapters 14 through 20 are intended to apply to buildings with ceiling slopes not exceeding 2 in 12 (16.7 percent) unless modified by a specific section in Chapter 12 and Chapters 14 through 20.

12.1.3* Building and Storage Height.

12.1.3.1 The maximum building height shall be measured to the underside of the roof deck or ceiling.

12.1.3.2 ESFR sprinklers shall be used only in buildings equal to, or less than, the height of the building for which they have been listed.

12.1.3.3 The sprinkler system design shall be based on the storage height and clearance to ceiling that routinely or periodically exist in the building and create the greatest water demand. Where storage is placed above doors, the storage height shall be calculated from the base of storage above the door.

12.1.3.4 Clearance to Ceiling.

12.1.3.4.1* The clearance to ceiling shall be measured in accordance with 12.1.3.4.1.1 through 12.1.3.4.1.3.

12.1.3.4.1.1 For corrugated metal deck roofs up to 3 in. (76 mm) in depth, the clearance to ceiling shall be measured from the top of storage to the bottom of the deck.

12.1.3.4.1.2 For corrugated metal deck roofs deeper than 3 in. (76 mm), the clearance to ceiling shall be measured to the highest point on the deck.

12.1.3.4.1.3 For ceilings that have insulation attached directly to underside of the ceiling or roof structure, the clearance to ceiling shall be measured from the top of storage to the bottom of the insulation and shall be in accordance with 12.1.3.4.1.3(A) or 12.1.3.4.1.3(B).

(A) For insulation that is attached directly to the ceiling or roof structure and is installed flat and parallel to the ceiling or roof structure, the clearance to ceiling shall be measured from the top of storage to the underside of the insulation.

(B) For insulation that is installed in a manner that causes it to deflect or sag down from the ceiling or roof structure, the clearance to ceiling shall be measured from the top of storage to a point half of the distance of the deflection from the insulation high point to the insulation low point. If the deflection or sag in the insulation exceeds 6 in. (152 mm), the clearance to ceiling shall be measured from the top of storage to the high point of the insulation.

12.1.3.4.2 For spray sprinkler criteria where the clearance to ceiling exceeds those identified in this section, the requirements of 12.1.3.4.3 through 12.1.3.4.8 shall apply.

12.1.3.4.3 Where the clearance to ceiling exceeds 20 ft (6.1 m) for Chapters 14 and 15, protection shall be based upon the storage height that would result in a clearance to ceiling of 20 ft (6.1 m).

12.1.3.4.4 Where the clearance to ceiling exceeds 20 ft (6.1 m) for Section 16.2, protection shall be based upon the storage height that would result in a clearance to ceiling of 20 ft (6.1 m) or providing one level of supplemental, quick-response in-rack sprinklers located directly below the top tier of storage and at every flue space intersection.

12.1.3.4.5 Where the clearance to ceiling exceeds 10 ft (3.1 m) for Section 16.3 or Section 17.2, protection shall be based upon the storage height that would result in a clearance to ceiling of 10 ft (3.1 m) or providing one level of supplemental, quick-response in-rack sprinklers located directly below the top tier of storage and at every flue space intersection.

12.1.3.4.6 Where the clearance exceeds 10 ft (3.1 m) for Section 17.3, protection shall be based upon providing one level of supplemental, quick-response in-rack sprinklers located directly below the top tier of storage and at every flue space intersection.

12.1.3.4.7 When applying the supplemental in-rack sprinkler option, the ceiling density shall be based upon the given storage height with an assumed acceptable clearance to ceiling.

Copyright 2014 National Fire Protection Association (NFPA). Licensed, by agreement, for individual use and download on October 4, 2014 to LEADER and READER for designated user PATTARAPORN SRITRAKOOL. No other reproduction or transmission in any form permitted without written permission of NFPA. For inquires or to report unauthorized use, contact licensing@nfpa.org.

12.1.3.4.8 If in-rack sprinklers are required for the actual storage height with an acceptable clearance to ceiling, in-rack sprinklers shall be installed as indicated by that criteria.

12.1.4* High Volume Low Speed (HVLS) Fans.

12.1.4.1 The installation of HVLS fans in buildings equipped with sprinklers, including ESFR sprinklers, shall comply with the following:

(1) The maximum fan diameter shall be 24 ft (7.3 m).
(2) The HVLS fan shall be centered approximately between four adjacent sprinklers.
(3) The vertical clearance from the HVLS fan to sprinkler deflector shall be a minimum of 3 ft (0.9 m).
(4) All HVLS fans shall be interlocked to shut down immediately upon receiving a waterflow signal from the alarm system in accordance with the requirements of *NFPA 72*.

12.2* Hose Connections.

12.2.1 Small hose connections [1½ in. (38 mm)] shall be provided where required by the authority having jurisdiction in accordance with 8.17.5 for first-aid fire-fighting and overhaul operations.

12.2.2 Small hose connections shall not be required for the protection of Class I, II, III, and IV commodities stored 12 ft (3.7 m) or less in height.

12.3* Adjacent Hazards or Design Methods. For buildings with two or more adjacent hazards or design methods, the following shall apply:

(1) Where areas are not physically separated by a barrier or partition capable of delaying heat from a fire in one area from fusing sprinklers in the adjacent area, the required sprinkler protection for the more demanding design basis shall extend 15 ft (4.6 m) beyond its perimeter.
(2) The requirements of 12.3(1) shall not apply where the areas are separated by a barrier partition that is capable of preventing heat from a fire in one area from fusing sprinklers in the adjacent area.
(3) The requirements of 12.3(1) shall not apply to the extension of more demanding criteria from an upper ceiling level to beneath a lower ceiling level where the difference in height between the ceiling levels is at least 2 ft (0.6 m).

12.4* Wet Pipe Systems.

12.4.1 Sprinkler systems shall be wet pipe systems.

12.4.2* In areas that are subject to freezing or where special conditions exist, dry pipe systems and preaction systems shall be permitted to protect storage occupancies.

12.4.3 ESFR sprinklers shall only be permitted to be wet pipe systems.

12.5 Dry Pipe and Preaction Systems.

12.5.1 For dry pipe systems and preaction systems, the area of sprinkler operation shall be increased by 30 percent without revising the density.

12.5.2 Densities and areas shall be selected so that the final area of operation after the 30 percent increase is not greater than 3900 ft^2 (360 m^2).

12.6* Storage Applications.

12.6.1 For storage applications with densities of 0.20 gpm/ft^2 (8.2 mm/min) or less, standard-response sprinklers with a K-factor of K-5.6 (80) or larger shall be permitted.

12.6.2 For general storage applications, rack storage, rubber tire storage, roll paper storage, and baled cotton storage being protected with upright and pendent spray sprinklers with required densities of greater than 0.20 gpm/ft^2 to 0.34 gpm/ft^2 (8.2 mm/min to 13.9 mm/min), standard-response sprinklers with a nominal K-factor of K-8.0 (115) or larger shall be used.

12.6.3 For general storage applications, rack storage, rubber tire storage, roll paper storage, and baled cotton storage being protected with upright and pendent spray sprinklers with required densities greater than 0.34 gpm/ft^2 (13.9 mm/min), standard-response spray sprinklers with a K-factor of K-11.2 (161) or larger that are listed for storage applications shall be used.

12.6.4* Unless the requirements of 12.6.5 are met, the requirements of 12.6.2 and 12.6.3 shall not apply to modifications to existing storage application systems, using sprinklers with K-factors of K-8.0 (115) or less.

12.6.5 Where applying the requirements of Figure 17.2.1.2.1(b) and Figure 17.2.1.2.1(c) utilizing the design criteria of 0.6 gpm/ft^2 per 2000 ft^2 (24.4 mm/min per 186 m^2) to existing storage applications, the requirements of 12.6.3 shall apply.

12.6.6 The use of quick-response spray sprinklers for storage applications shall be permitted when listed for such use.

12.6.7 CMSA and ESFR sprinklers shall be permitted to protect storage of Class I through Class IV commodities, plastic commodities, miscellaneous storage, and other storage as specified in Chapter 12 through Chapter 20 or by other NFPA standards.

12.6.7.1 ESFR sprinklers designed to meet any criteria in Chapter 12 through Chapter 20 shall be permitted to protect light and ordinary hazard occupancies.

12.6.7.2 Quick-response CMSA sprinklers designed to meet any criteria in Chapter 12 through Chapter 20 shall be permitted to protect light and ordinary hazard occupancies.

12.6.7.3 Standard-response CMSA sprinklers designed to meet any criteria in Chapter 12 through Chapter 20 shall be permitted to protect ordinary hazard occupancies.

12.6.8 The design figures indicate water demands for ordinary-temperature-rated and nominal high-temperature-rated sprinklers at the ceiling.

12.6.8.1 The ordinary-temperature design densities correspond to ordinary-temperature-rated sprinklers and shall be used for sprinklers with ordinary- and intermediate-temperature classification.

12.6.8.2 The high-temperature design densities correspond to high-temperature-rated sprinklers and shall be used for sprinklers having a high-temperature rating.

12.6.9 Ordinary- and intermediate-temperature sprinklers with K-factors of K-11.2 (161) or larger, where listed for storage, shall be permitted to use the densities for high-temperature sprinklers.

12.7 Discharge Considerations.

12.7.1 The water supply for sprinklers only shall be determined either from the density/area requirements of Chapter 12 through Chapter 20 or shall be based upon the room design method in accordance with Section 12.10, at the discretion of the designer.

Copyright 2014 National Fire Protection Association (NFPA). Licensed, by agreement, for individual use and download on October 4, 2014 to LEADER and READER for designated user PATTARAPORN SRITRAKOOL. No other reproduction or transmission in any form permitted without written permission of NFPA. For inquires or to report unauthorized use, contact licensing@nfpa.org.

12.7.2* Systems with Multiple Hazard Classifications. For systems with multiple hazard classifications, the hose stream allowance and water supply duration shall be in accordance with Section 12.8 as well as one of the following:

(1) The water supply requirements for the highest hazard classification within the system shall be used.

(2) The water supply requirements for each individual hazard classification shall be used in the calculations for the design area for that hazard.

(3)*For systems with multiple hazard classifications where the higher classification only lies within single rooms less than or equal to 400 ft^2 (37.2 m^2) in area with no such rooms adjacent, the water supply requirements for the principal occupancy shall be used for the remainder of the system.

12.7.3 The calculations shall satisfy any single point on appropriate density/area curves.

12.7.4 The minimum water supply requirements shall be determined by adding the hose stream allowance from Section 12.8 to the water supply for sprinklers as determined by Chapter 12 through Chapter 20.

12.7.5 The minimum water supply requirements determined from 12.7.4 shall be available for the minimum duration specified in Section 12.8.

12.7.6 Total system water supply requirements shall be determined in accordance with the hydraulic calculation procedures of Chapter 23.

12.7.6.1 When using the density/area method, the design area shall meet the requirements of 23.4.4.1.1.1.

12.7.6.2 When using CMSA, the design area shall meet the requirements of 23.4.4.2.1.

12.7.6.3 When using ESFR sprinklers, the design area shall consist of the most hydraulically demanding area of 12 sprinklers, consisting of four sprinklers on each of three branch lines, unless other specific numbers of design sprinklers are required in other sections of this standard.

12.7.7 Multiple Adjustments.

12.7.7.1 Where multiple adjustments to the area of operation are required to be made, these adjustments shall be compounded based on the area of operation originally selected.

12.7.7.2 If the building has unsprinklered combustible concealed spaces, the rules of Section 12.9 shall be applied after all other modifications have been made.

12.7.7.3 The minimum design density for any sprinkler system installed in a storage occupancy shall be not less than 0.15 gpm/ft^2 (6.1 mm/min) after all adjustments are made.

12.8 Hose Stream Allowance and Water Supply Duration.

12.8.1* Tanks shall be sized to supply the equipment that they serve.

12.8.2* Pumps shall be sized to supply the equipment that they serve.

12.8.3 Water allowance for outside hose shall be added to the sprinkler requirement at the connection to the city main or a yard hydrant, whichever is closer to the system riser.

12.8.4 Where inside hose connections are planned or are required, the following shall apply:

(1) A total water allowance of 50 gpm (189 L/min) for a single hose connection installation shall be added to the sprinkler requirements.

(2) A total water allowance of 100 gpm (378 L/min) for a multiple hose connection installation shall be added to the sprinkler requirements.

(3) The water allowance shall be added in 50 gpm (189 L/min) increments beginning at the most remote hose connection, with each increment added at the pressure required by the sprinkler system design at that point.

12.8.5 When hose valves for fire department use are attached to wet pipe sprinkler system risers in accordance with 8.17.5.2, the following shall apply:

(1) The water supply shall not be required to be added to standpipe demand as determined from NFPA 14.

(2) Where the combined sprinkler system demand and hose stream allowance of Chapter 12 and Chapters 14 through 20 exceeds the requirements of NFPA 14, this higher demand shall be used.

(3) For partially sprinklered buildings, the sprinkler demand, not including hose stream allowance, as indicated in Chapter 12 and Chapters 14 through 20 shall be added to the requirements given in NFPA 14.

12.8.6 Hydraulically Designed Occupancy Hazard Fire Control Sprinkler System.

12.8.6.1 Unless indicated otherwise, the minimum water supply requirements for a hydraulically designed occupancy hazard fire control sprinkler system shall be determined by adding the hose stream allowance from Table 12.8.6.1 to the water supply for sprinklers.

12.8.6.2 Unless indicated otherwise, the supply determined in accordance with 12.8.6.1 shall be available for the minimum duration specified in Table 12.8.6.1.

12.9 Restrictions.

12.9.1* When using the density/area method, unless the requirements of 12.9.2 are met for buildings having unsprinklered combustible concealed spaces as described in 8.15.1.2 and 8.15.6, the minimum area of sprinkler operation for that portion of the building shall be 3000 ft^2 (279 m^2).

12.9.1.1 The design area of 3000 ft^2 (279 m^2) shall be applied only to the sprinkler system or portions of the sprinkler system that are adjacent to the qualifying combustible concealed space.

12.9.1.2 The term *adjacent* shall apply to any sprinkler system protecting a space above, below, or next to the qualifying concealed space except where a barrier with a fire resistance rating at least equivalent to the water supply duration completely separates the concealed space from the sprinklered area.

Copyright 2014 National Fire Protection Association (NFPA). Licensed, by agreement, for individual use and download on October 4, 2014 to LEADER and READER for designated user PATTARAPORN SRITRAKOOL. No other reproduction or transmission in any form permitted without written permission of NFPA. For inquires or to report unauthorized use, contact licensing@nfpa.org.

Table 12.8.6.1 Hose Stream Allowance and Water Supply Duration

Sprinkler Type	Sprinkler Spacing Type	Number of Sprinklers in Design Area*	Size of Design Area	Hose Stream Allowance		Water Supply Duration (minutes)
				gpm	L/min	
Control mode density/area	Standard and extended-coverage	NA	Up to 1200 ft^2 (111 m^2)	250	950	60
			Over 1200 ft^2 (111 m^2) up to 1500 ft^2 (139 m^2)	500	1900	90
			Over 1500 ft^2 (139 m^2) up to 2600 ft^2 (240 m^2)	500	1900	120
			Over 2600 ft^2 (240 m^2)	500	1900	150
CMSA	Standard	Up to 12	NA	250	950	60
		Over 12 to 15	NA	500	1900	90
		Over 15 to 25	NA	500	1900	120
		Over 25	NA	500	1900	150
	Extended-coverage	Up to 6	NA	250	950	60
		Up to 8	144 ft^2 (13.4 m^2) maximum	250	950	60
		Over 6 to 8	NA	500	1900	90
		Over 8 to 12	NA	500	1900	120
		Over 12	NA	500	1900	150
ESFR	Standard	Up to 12	NA	250	950	60
		Over 12 to 15	NA	500	1900	90
		Over 15 to 25	NA	500	1900	120
		Over 25	NA	500	1900	150

NA: Not applicable.
*For CSMA and ESFR sprinklers the additional sprinklers included in the design area for obstructions do not need to be considered in determining the total number of sprinklers in this column.

12.9.2 The following unsprinklered combustible concealed spaces shall not require a minimum design area of sprinkler operation of 3000 ft^2 (279 m^2):

(1) Noncombustible and limited-combustible concealed spaces with minimal combustible loading having no access. The space shall be considered a concealed space even with small openings such as those used as return air for a plenum.
(2) Noncombustible and limited-combustible concealed spaces with limited access and not permitting occupancy or storage of combustibles. The space shall be considered a concealed space even with small openings such as those used as return air for a plenum.
(3) Combustible concealed spaces filled entirely with noncombustible insulation.
(4) *Light or ordinary hazard occupancies where noncombustible or limited-combustible ceilings are directly attached to the bottom of solid wood joists so as to create enclosed joist spaces 160 ft^3 (4.5 m^3) or less in volume, including space below insulation that is laid directly on top or within the ceiling joists in an otherwise sprinklered concealed space.
(5) Concealed spaces where rigid materials are used and the exposed surfaces have a flame spread index of 25 or less and the materials have been demonstrated to not propagate fire more than 10.5 ft (3.2 m) when tested in accordance with ASTM E 84, *Standard Test Method for Surface Burning Characteristics of Building Materials,* or ANSI/UL 723, *Standard for Test for Surface Burning Characteristics of Building Materials,* extended for an additional 20 minutes in the form in which they are installed in the space.
(6) Concealed spaces in which the exposed materials are constructed entirely of fire retardant–treated wood as defined by NFPA 703.
(7) Concealed spaces over isolated small rooms not exceeding 55 ft^2 (5.1 m^2) in area.

Copyright 2014 National Fire Protection Association (NFPA). Licensed, by agreement, for individual use and download on October 4, 2014 to LEADER and READER for designated user PATTARAPORN SRITRAKOOL. No other reproduction or transmission in any form permitted without written permission of NFPA. For inquires or to report unauthorized use, contact licensing@nfpa.org.

(8) Vertical pipe chases under 10 ft^2 (0.93 m^2), provided that in multifloor buildings the chases are firestopped at each floor using materials equivalent to the floor construction. Such pipe chases shall contain no sources of ignition, piping shall be noncombustible, and pipe penetrations at each floor shall be properly sealed.

(9) Exterior columns under 10 ft^2 (0.93 m^2) in area formed by studs or wood joists, supporting exterior canopies that are fully protected with a sprinkler system.

(10)*Light or ordinary hazard occupancies where noncombustible or limited-combustible ceilings are attached to the bottom of composite wood joists either directly or on to metal channels not exceeding 1 in. (25.4 mm) in depth, provided the adjacent joist channels are firestopped into volumes not exceeding 160 ft^3 (4.5 m^3) using materials equivalent to ½ in. (12.7 mm) gypsum board and at least 3½ in. (90 mm) of batt insulation is installed at the bottom of the joist channels when the ceiling is attached utilizing metal channels.

12.10 Room Design Method.

12.10.1* The water supply requirements for sprinklers only shall be based upon the room that creates the greatest demand.

12.10.2 To utilize the room design method, all rooms shall be enclosed with walls having a fire resistance rating equal to the water supply duration indicated in Chapters 13 through 20.

12.10.2.1 Minimum protection of openings shall include automatic- or self-closing doors with the appropriate fire protection rating for the enclosure.

12.10.3 Where the room design method is used, the density shall correspond to that required for the smallest area acceptable under the density/area method.

12.11* High-Expansion Foam Systems.

12.11.1 High-expansion foam systems that are installed in addition to automatic sprinklers shall be installed in accordance with NFPA 11.

12.11.2 High-expansion foam systems shall be automatic in operation.

12.11.3 High-expansion foam used to protect the idle pallet shall have a maximum fill time of 4 minutes.

12.11.4 Detectors for high-expansion foam systems shall be listed and shall be installed at no more than one-half the listed spacing.

12.11.5 The release system for the high expansion foam deluge system shall be designed to operate prior to the sprinklers installed in the area.

12.12* Protection of Idle Pallets.

12.12.1 Wood Pallets.

12.12.1.1* Wood pallets shall be permitted to be stored in the following arrangements:

(1) Stored outside
(2) Stored in a detached structure
(3) Stored indoors where arranged and protected in accordance with 12.12.1.2

12.12.1.2 Wood pallets, where stored indoors, shall be protected in accordance with one of the following:

(1) Control mode density/area sprinkler protection as specified in Table 12.12.1.2(a).
(2) CMSA sprinkler protection in accordance with Table 12.12.1.2(b).
(3) ESFR sprinkler protection in accordance with Table 12.12.1.2(c).
(4) Control mode density/area sprinkler protection in accordance with the OH2 curve of Figure 13.2.1 existing with a hose stream demand of at least 250 gpm (946 L/min) for a duration of at least 60 minutes when pallets are stored no higher than 6 ft (1.8 m) and each pile of no more than four stacks shall be separated from other pallet piles by at least 8 ft (1.4 m) of clear space or 25 ft (7.6 m) of commodity. The maximum clearance to ceiling of 20 ft (6.1 m) specified in 12.1.3.4 shall not apply to arrangement 12.12.1.2(4).

12.12.1.3 Idle wood pallets shall not be stored in racks unless they are protected in accordance with the appropriate requirements of Table 12.12.1.2(a) or Table 12.12.1.2(c). *(See Section C.7.)*

Table 12.12.1.2(a) Control Mode Density/Area Sprinkler Protection for Indoor Storage of Idle Wood Pallets

Type of Sprinkler	Location of Storage	Nominal K-Factor	Maximum Storage Height		Maximum Celing/Roof Height		Sprinkler Density		Areas of Operation			
									High Temperature		Ordinary Temperature	
			ft	m	ft	m	gpm/ft^2	mm/min	ft^2	m^2	ft^2	m^2
Control mode density/area	On floor	8 (115) or larger	Up to 6	Up to 1.8	20	6.1	0.20	8.2	2000	186	3000	279
	On floor	11.2 (160) or larger	Up to 8	Up to 2.4	30	9.1	0.45	18.3	2500	232	4000	372
	On floor or rack without solid shelves	11.2 (160) or larger	8 to 12	2.4 to 3.7	30	9.1	0.6	24.5	3500	325	6000	557
			12 to 20	3.7 to 6.1	30	9.1	0.6	24.5	4500	418	—	—
	On floor	16.8 (240) or larger	Up to 20	Up to 6.1	30	9.1	0.6	24.5	—	—	2000	186

Copyright 2014 National Fire Protection Association (NFPA). Licensed, by agreement, for individual use and download on October 4, 2014 to LEADER and READER for designated user PATTARAPORN SRITRAKOOL. No other reproduction or transmission in any form permitted without written permission of NFPA. For inquires or to report unauthorized use, contact licensing@nfpa.org.

Table 12.12.1.2(b) CMSA Sprinkler Protection for Indoor Storage of Idle Wood Pallets

Storage Arrangement	Commodity Class	Maximum Storage Height		Maximum Ceiling/Roof Height		K-Factor/ Orientation	Type of System	Number of Design Sprinklers	Minimum Operating Pressure	
		ft	m	ft	m				psi	bar
On floor	Idle wood pallets	20	6.1	30	9.1	11.2 (160) Upright	Wet	15	25	1.7
							Dry	25	25	1.7
						16.8 (240) Upright	Wet	15	15	1.0
							Dry	25	15	1.0
						19.6 (280) Pendent	Wet	15	16	1.1
				35	10.6	19.6 (280) Pendent	Wet	15	25	1.7
				40	12.1	19.6 (280) Pendent	Wet	15	30	2.1

Table 12.12.1.2(c) ESFR Sprinkler Protection for Indoor Storage of Idle Wood Pallets

Type of Sprinkler (Orientation)	Location of Storage	Nominal K-Factor	Maximum Storage Height		Maximum Ceiling/ Roof Height		Minimum Operating Pressure	
			ft	m	ft	m	psi	bar
ESFR (pendent)	On floor or rack without solid shelves	14.0 (200)	25	7.6	30	9.1	50	3.4
			25	7.6	32	9.8	60	4.1
		16.8 (240)	25	7.6	30	9.1	35	2.4
			25	7.6	32	9.8	42	2.9
			35	10.7	40	12.2	52	3.6
		22.4 (320)	25	7.6	30	9.1	25	1.7
			30	9.1	35	10.7	35	2.4
			35	10.7	40	12.2	40	2.8
		25.2 (360)	25	7.6	30	9.1	15	1.0
			30	9.1	35	10.7	20	1.4
			35	10.7	40	12.2	25	1.7
ESFR (upright)	On floor	14.0 (200)	20	6.1	30	9.1	50	3.4
			20	6.1	35	10.7	75	5.2
		16.8 (240)	20	6.1	30	9.1	35	2.4
			20	6.1	35	10.7	52	3.6

12.12.2 Plastic Pallets.

12.12.2.1 Plastic pallets shall be permitted to be stored in the following manner:

(1) Plastic pallets shall be permitted to be stored outside.
(2) Plastic pallets shall be permitted to be stored in a detached structure.
(3) Plastic pallets shall be permitted to be stored indoors where arranged and protected in accordance with the requirements of 12.12.2.2.

12.12.2.2 Protection Criteria for Plastic Pallets Stored Indoors.

12.12.2.2.1 Plastic pallets having a demonstrated fire hazard that is equal to or less than idle wood pallets and is listed for such equivalency shall be permitted to be protected in accordance with 12.12.1.

12.12.2.2.2 When specific test data are available, the data shall take precedence in determining the required protection of idle plastic pallets.

Copyright 2014 National Fire Protection Association (NFPA). Licensed, by agreement, for individual use and download on October 4, 2014 to LEADER and READER for designated user PATTARAPORN SRITRAKOOL. No other reproduction or transmission in any form permitted without written permission of NFPA. For inquires or to report unauthorized use, contact licensing@nfpa.org.

Table 12.12.2.2.3 ESFR Sprinkler Protection for Indoor Storage of Idle Plastic Pallets

Type of Sprinkler (Orientation)	Location of Storage	Nominal K-Factor	Maximum Storage Height		Maximum Ceiling/Roof Height		Minimum Operating Pressure	
			ft	m	ft	m	psi	bar
ESFR (pendent)	On floor or rack without solid shelves	14.0 (200)	25	7.6	30	9.1	50	3.4
			25	7.6	32	9.8	60	4.1
		16.8 (240)	25	7.6	30	9.1	35	2.4
			25	7.6	32	9.8	42	2.9
			35	10.7	40	12.2	52	3.6

12.12.2.2.3 Protection with ESFR sprinklers shall be in accordance with the requirements of Table 12.12.2.2.3.

12.12.2.2.4 Protection with spray sprinklers shall be in accordance with one of the scenarios in 12.12.2.2.4.1 through 12.12.2.2.4.3.

12.12.2.2.4.1 Where plastic pallets are stored in cutoff rooms, the following shall apply:

(1) The cutoff rooms shall have at least one exterior wall.
(2) The plastic pallet storage shall be separated from the remainder of the building by 3 hour–rated fire walls.
(3) The storage shall be protected by sprinklers designed to deliver 0.6 gpm/ft^2 (24.5 mm/min) for the entire room or by high-expansion foam and sprinklers designed to deliver 0.30 gpm/ft^2 (12.2 mm/min) for the entire room.
(4) The storage shall be piled no higher than 12 ft (3.7 m).
(5) Any steel columns shall be protected by 1-hour fireproofing or a sidewall sprinkler directed to one side of the column at the top or at the 15 ft (4.6 m) level, whichever is lower. Flow from these sprinklers shall be permitted to be omitted from the sprinkler system demand for hydraulic calculations.

12.12.2.2.4.2 Where plastic pallets are stored without cutoffs from other storage, the following shall apply:

(1) Maximum storage height of 10 ft (3.05 m)
(2) Maximum ceiling height of 30 ft (9.1 m)
(3) Sprinkler density 0.6 gpm/ft^2 over 2000 ft^2 (24.4 mm/min over 186 m^2)
(4) Minimum sprinkler K-factor of 16.8 (240)

12.12.2.2.4.3 Plastic pallets shall have no impact on the required sprinkler protection when stored as follows:

(1) Storage shall be piled no higher than 4 ft (1.2 m).
(2) Sprinkler protection shall employ high temperature–rated sprinklers.
(3) Each pallet pile of no more than two stacks shall be separated from other pallet piles by at least 8 ft (2.4 m) of clear space or 25 ft (7.6 m) of stored commodity.
(4) Minimum ceiling design of OH2 shall be used.

12.12.2.3 Idle plastic pallets shall be stored only in racks where protected in accordance with the requirements of Table 12.12.2.2.3.

12.12.2.3.1 When specific test data and a product listing are available, the data shall take precedence in determining the required protection of idle plastic pallets stored in racks.

12.12.3 Idle Pallets Stored on Racks, on Shelves, and Above Doors.

12.12.3.1 Idle pallets shall not be stored on racks or shelves, except where permitted in 12.12.1.3, 12.12.2.3, and 12.12.3.2.

12.12.3.2 Idle pallets shall be permitted to be stored on the lowest level of storage only where no storage or shelves are located above the stored pallets and the applicable protection criteria referenced for on-floor storage in Section 12.12 are applied.

12.12.3.3 Where idle pallet storage is above a door, the idle pallet storage height and ceiling height shall be calculated from the base of storage above the door using the applicable protection criteria referenced in Section 12.12.

12.12.4 High-Expansion Foam — Reduction in Ceiling Density. A reduction in ceiling density to one-half that required for idle pallets shall be permitted without revising the design area, but the density shall be no less than 0.15 gpm/ft^2 (6.1 mm/min).

Chapter 13 Miscellaneous Storage

13.1 Miscellaneous Storage Up to 12 ft (3.7 m) in Height.

13.1.1 Hose Connections. Hose connections shall not be required for the protection of miscellaneous storage.

13.2 Design Basis.

13.2.1 Table 13.2.1 and Figure 13.2.1 shall apply to any of the following situations:

(1) Miscellaneous storage of Class I through Class IV commodities up to 12 ft (3.7 m) in height
(2) Miscellaneous storage of Group A plastics up to 12 ft (3.7 m) in height
(3) Miscellaneous storage of rubber tires up to 12 ft (3.7 m) in height
(4) Miscellaneous storage of rolled paper up to 12 ft (3.7 m) in height
(5) Storage of Class I through Class IV commodities up to 12 ft (3.7 m) in height as directed by 14.2.3.1 and 16.2.1.2.1
(6) Storage of Group A plastics up to 5 ft (1.5 m) in height as directed by 15.2.1 and 17.2.1.1

Copyright 2014 National Fire Protection Association (NFPA). Licensed, by agreement, for individual use and download on October 4, 2014 to LEADER and READER for designated user PATTARAPORN SRITRAKOOL. No other reproduction or transmission in any form permitted without written permission of NFPA. For inquires or to report unauthorized use, contact licensing@nfpa.org.

Table 13.2.1 Discharge Criteria for Miscellaneous Storage Up to 12 ft (3.7 m) in Height

Commodity	Type of Storage	Storage Height ft	Storage Height m	Maximum Ceiling Height ft	Maximum Ceiling Height m	Design Curve Figure 13.2.1	Note	Inside Hose gpm	Inside Hose L/min	Total Combined Inside and Outside Hose gpm	Total Combined Inside and Outside Hose L/min	Duration (minutes)
Class I to Class IV												
Class I	Solid-piled, palletized, bin box, shelf, rack, and back-to-back shelf storage	≤12	≤3.7	—	—	OH1		0, 50, 100	0, 189, 379	250	946	90
Class II		≤10	≤3.0	—	—	OH1		0, 50, 100	0, 189, 379	250	946	90
Class II		>10 to ≤12	>3.0 to ≤3.7	—	—	OH2		0, 50, 100	0, 189, 379	250	946	90
Class III		≤12	≤3.7	—	—	OH2		0, 50, 100	0, 189, 379	250	946	90
Class IV		≤10	≤3.0	—	—	OH2		0, 50, 100	0, 189, 379	250	946	90
Class IV	Palletized, bin box, shelf, and solid-piled	>10 to ≤12	>3.0 to ≤3.7	32	9.8	OH2		0, 50, 100	0, 189, 379	250	946	90
	Rack and back-to-back shelf storage	>10 to ≤12	>3.0 to ≤3.7	32	9.8	EH1		0, 50, 100	0, 189, 379	500	1893	120
Group A Plastic Storage												
Cartoned	Unexpanded and expanded	Solid-piled, palletized, bin box, shelf, rack, and back-to-back shelf storage	≤5	≤1.5	—	—	OH2		0, 50, 100	0, 189, 379	250	946	90
			>5 to ≤10	>1.5 to ≤3.0	15	4.6	EH1		0, 50, 100	0, 189, 379	500	1893	120
			>5 to ≤10	>1.5 to ≤3.0	20	6.1	EH2		0, 50, 100	0, 189, 379	500	1893	120
			>10 to ≤12	>3.0 to ≤3.7	17	5.2	EH2		0, 50, 100	0, 189, 379	500	1893	120
		Solid-piled, palletized, bin box, shelf, and back-to-back shelf storage	>10 to ≤12	>3.0 to ≤3.7	32	9.8	EH2		0, 50, 100	0, 189, 379	500	1893	120
		Rack	>10 to ≤12	>3.0 to ≤3.7	32	9.8	OH2	+ 1 level of in-rack	0, 50, 100	0, 189, 379	250	946	90

(continues)

Copyright 2014 National Fire Protection Association (NFPA). Licensed, by agreement, for individual use and download on October 4, 2014 to LEADER and READER for designated user PATTARAPORN SRITRAKOOL. No other reproduction or transmission in any form permitted without written permission of NFPA. For inquires or to report unauthorized use, contact licensing@nfpa.org.

Table 13.2.1 *Continued*

Commodity		Type of Storage	Storage Height ft	Storage Height m	Maximum Ceiling Height ft	Maximum Ceiling Height m	Design Curve Figure 13.2.1	Note	Inside Hose gpm	Inside Hose L/min	Total Combined Inside and Outside Hose gpm	Total Combined Inside and Outside Hose L/min	Duration (minutes)
Exposed	Unexpanded and expanded	Solid-piled, palletized, bin box, shelf, rack, and back-to-back shelf storage	≤5	≤1.5	—	—	OH2		0, 50, 100	0, 189, 379	250	946	90
		Solid-piled, palletized, bin box, shelf, and back-to-back shelf storage	>5 to ≤8	>1.5 to ≤2.4	28	8.5	EH2		0, 50, 100	0, 189, 379	500	1893	120
		Solid-piled, palletized, bin box, shelf, rack, and back-to-back shelf storage	>5 to ≤10	>1.5 to ≤3.0	15	4.6	EH2		0, 50, 100	0, 189, 379	500	1893	120
	Unexpanded	Solid-piled, palletized, bin box, shelf, rack, and back-to-back shelf storage	>5 to ≤10	>1.5 to ≤3.0	20	6.1	EH2		0, 50, 100	0, 189, 379	500	1893	120
	Expanded	Rack	>5 to ≤10	>1.5 to ≤3.0	20	6.1	OH2	+1 level of in-rack	0, 50, 100	0, 189, 379	250	946	90
	Unexpanded and expanded	Solid-piled, palletized, bin box, shelf, and back-to-back shelf storage	>10 to ≤12	>3.0 to ≤3.7	17	5.2	EH2		0, 50, 100	0, 189, 379	500	1893	120
		Rack	>10 to ≤12	>3.0 to ≤3.7	17	5.2	EH2		0, 50, 100	0, 189, 379	500	1893	120
			>10 to ≤12	>3.0 to ≤3.7	32	9.8	OH2	+1 level of in-rack	0, 50, 100	0, 189, 379	250	946	90
Tire Storage													
Tires		On floor, on side	>5 to ≤12	>1.5 to ≤3.7	32	9.8	EH1		0, 50, 100	0, 189, 379	500	1893	120
		On floor, on tread, or on side	≤5	≤1.5	—	—	OH2		0, 50, 100	0, 189, 379	250	946	90
		Single-, double-, or multiple-row racks on tread or on side	≤5	≤1.5	—	—	OH2		0, 50, 100	0, 189, 379	250	946	90
		Single-row rack, portable, on tread or on side	>5 to ≤12	>1.5 to ≤3.7	32	9.8	EH1		0, 50, 100	0, 189, 379	500	1893	120
		Single-row rack, fixed, on tread or on side	>5 to ≤12	>1.5 to ≤3.7	32	9.8	EH1		0, 50, 100	0, 189, 379	500	1893	120
			>5 to ≤12	>1.5 to ≤3.7	32	9.8	OH2	+1 level of in-rack	0, 50, 100	0, 189, 379	250	946	90
Rolled Paper Storage													
Heavyweight and mediumweight		On end	≤10	≤3.0	30	9.1	OH2		0, 50, 100	0, 189, 379	250	946	90
Tissue and lightweight		On end	≤10	≤3.0	30	9.1	EH1		0, 50, 100	0, 189, 379	250	946	120

Copyright 2014 National Fire Protection Association (NFPA). Licensed, by agreement, for individual use and download on October 4, 2014 to LEADER and READER for designated user PATTARAPORN SRITRAKOOL. No other reproduction or transmission in any form permitted without written permission of NFPA. For inquires or to report unauthorized use, contact licensing@nfpa.org.

13.2.2 Installation criteria as permitted by NFPA 13 and design criteria and modifiers as permitted by the density/area method of Chapter 11 for ordinary hazard Group 1, ordinary hazard Group 2, extra hazard Group 1, and extra hazard Group 2 occupancies shall be applicable for the protection of any of the following:

(1) Miscellaneous storage as described by Table 13.2.1
(2) Commodity Class I through Class IV storage 12 ft (3.7 m) or less in height as directed by 14.2.3.1 and 16.2.1.2.1
(3) Storage of Group A plastics up to 5 ft (1.5 m) in height as directed by 15.2.1 and 17.2.1.1

13.2.3 Where K-11.2 (160) or larger sprinklers are used with EH1 or EH2 design curves from Figure 13.2.1, the design area shall be permitted to be reduced by 25 percent but not below 2000 ft^2 (186 m^2), regardless of temperature rating.

13.3 In-Rack Sprinklers.

13.3.1 General. In-rack sprinklers required by Table 13.2.1 shall meet the requirements of this section and the applicable storage protection and arrangement sections of this chapter.

13.3.2 Discharge Criteria. In-rack sprinklers shall have a K-factor of 5.6 (80) or larger and operate at a minimum of 15 psi (1 bar).

13.3.3 Water Demand. Where one level of in-rack sprinklers is installed for miscellaneous storage, water demand shall be based on simultaneous operation of the hydraulically most demanding four adjacent sprinklers.

13.3.4 In-Rack Sprinkler Locations.

13.3.4.1 In-rack sprinklers for miscellaneous storage shall be located at the first tier level at or above one-half of the storage height.

13.3.4.2 Maximum horizontal spacing of in-rack sprinklers in single- or double-row racks with Class I, II, III, or IV commodities shall be in accordance with Table 13.3.4.2.

13.3.4.3 In-rack sprinklers shall be located in the longitudinal flue at the intersection of the transverse flues while not exceeding the maximum spacing rules.

13.3.4.3.1 If no longitudinal flue is provided in single- and double-row racks, in-rack sprinklers shall be located within 12 in. (300 mm) of the center of the rack while not exceeding the maximum spacing.

13.3.4.4 Where distances between transverse flues exceed the maximum allowable distances, sprinklers shall be installed at the intersection of the transverse and longitudinal flues and additional sprinklers shall be installed between transverse flues to meet the maximum distance rules.

13.3.4.5 Where no transverse flues exist, in-rack sprinklers shall not exceed the maximum spacing rules.

Chapter 14 Protection for Palletized, Solid-Piled, Bin Box, Shelf, or Back-to-Back Shelf Storage of Class I through Class IV Commodities

14.1 General.

14.1.1 This chapter shall apply to palletized, solid-piled, bin box, shelf, or back-to-back shelf storage for a broad range of combustibles.

14.1.2 The requirements of Chapter 12 shall apply unless modified by this chapter.

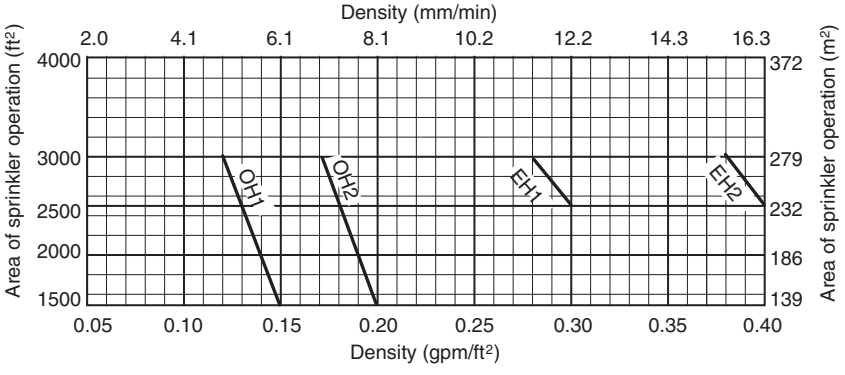

FIGURE 13.2.1 Miscellaneous Storage Up to 12 ft (3.7 m) in Height — Design Curves (see Table 13.2.1).

Table 13.3.4.2 In-Rack Sprinkler Spacing for Class I, II, III, and IV Commodities Stored in Single- or Double-Row Racks Up to 12 ft (3.7 m) in Height

			Commodity Class					
	Aisle Widths		I and II		III		IV	
Encapsulated	ft	m	ft	m	ft	m	ft	m
No	8	2.4	12	3.7	12	3.7	10	3.0
No	4	1.2	12	3.7	10	3.0	10	3.0
Yes	—	—	8	2.4	8	2.4	8	2.4

Copyright 2014 National Fire Protection Association (NFPA). Licensed, by agreement, for individual use and download on October 4, 2014 to LEADER and READER for designated user PATTARAPORN SRITRAKOOL. No other reproduction or transmission in any form permitted without written permission of NFPA. For inquires or to report unauthorized use, contact licensing@nfpa.org.

14.2* Control Mode Density/Area Sprinkler Protection Criteria for Palletized, Solid-Piled, Bin Box, Shelf, or Back-to-Back Shelf Storage of Class I Through Class IV Commodities.

14.2.1 Protection for Class I through Class IV commodities in the following configurations shall be provided in accordance with this section:

(1) Nonencapsulated commodities that are solid-piled, palletized, or bin box storage up to 30 ft (9.1 m) in height
(2) Nonencapsulated commodities on shelf storage up to 15 ft (4.6 m) in height
(3)*Encapsulated commodities that are solid-piled, palletized, bin box, or shelf storage up to 15 ft (4.6 m) in height
(4) Back-to-back shelf storage up to 15 ft (4.6 m) in height
(5) Encapsulated storage of solid-piled and palletized Class I through IV commodities permitted in accordance with 14.2.5 for storage heights over 15 ft (4.6 m) up to and including 20 ft (6.1 m)

14.2.2 The area and density for the hydraulically remote area and the water supply shall be determined as specified in 14.2.3 for storage up to and including 12 ft (3.7 m) and 14.2.4 for storage over 12 ft (3.7 m).

14.2.3 Protection Criteria for Palletized, Solid-Piled, Bin Box, Shelf, or Back-to-Back Shelf Storage of Class I Through Class IV Commodities Stored Up to 12 ft (3.7 m) in Height.

14.2.3.1 The protection criteria for storage up to and including 12 ft (3.7 m) shall be the same as for miscellaneous storage selected from Chapter 13.

14.2.3.2 The protection criteria in Chapter 13 shall be acceptable for storage of Class I to Class IV commodities up to and including 12 ft (3.7 m) in height *(see Table 13.2.1)*.

14.2.4 Protection Criteria for Palletized, Solid-Piled, Bin Box, Shelf, or Back-to-Back Shelf Storage of Class I Through Class IV Commodities Stored Over 12 ft (3.7 m) in Height.

14.2.4.1 Where using ordinary temperature–rated sprinklers, a single point shall be selected from the appropriate commodity curve on Figure 14.2.4.1.

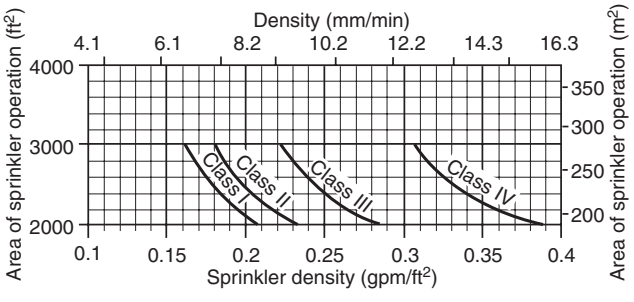

FIGURE 14.2.4.1 Sprinkler System Design Curves for 20 ft (6.1 m) High Storage — Ordinary Temperature–Rated Sprinklers.

14.2.4.2 Where using high temperature–rated sprinklers, a single point shall be selected from the appropriate commodity curve on Figure 14.2.4.2.

14.2.4.3 The densities selected in accordance with 14.2.4.1 or 14.2.4.2 shall be modified in accordance with Figure 14.2.4.3 without revising the design area.

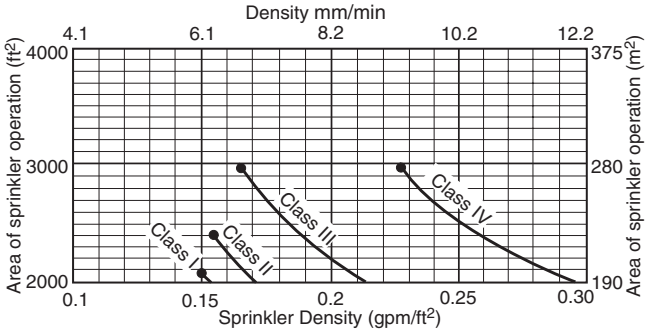

FIGURE 14.2.4.2 Sprinkler System Design Curves for 20 ft (6.1 m) High Storage — High Temperature–Rated Sprinklers.

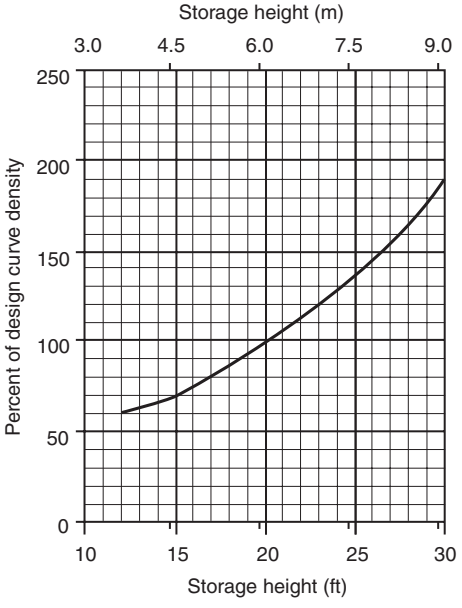

FIGURE 14.2.4.3 Ceiling Sprinkler Density vs. Storage Height.

14.2.4.4 In the case of metal bin boxes with face areas not exceeding 16 ft^2 (1.5 m^2) and metal closed shelves with face areas not exceeding 16 ft^2 (1.5 m^2), the area of application shall be permitted to be reduced by 33 percent, provided the minimum requirements of 14.2.4.5 and 14.2.4.6 are met.

14.2.4.5 For storage greater than 12 ft (3.7 m), the design density shall not be less than 0.15 gpm/ft^2 (6.1 mm/min), and the design area shall not be less than 2000 ft^2 (186 m^2) for wet systems or 2600 ft^2 (242 m^2) for dry systems for any commodity, class, or group.

14.2.4.6 For storage greater than 12 ft (3.7 m), the sprinkler design density for any given area of operation for a Class III or Class IV commodity, calculated in accordance with 14.2.4, shall not be less than the density for the corresponding area of operation for ordinary hazard Group 2.

14.2.4.7 For back-to-back shelf storage, the design density shall be taken from Figure 14.2.4.1 for storage greater than 12 ft (3.7 m) and up to 15 ft (4.6 m) with no reduction for design density referenced in Figure 14.2.4.3.

Copyright 2014 National Fire Protection Association (NFPA). Licensed, by agreement, for individual use and download on October 4, 2014 to LEADER and READER for designated user PATTARAPORN SRITRAKOOL. No other reproduction or transmission in any form permitted without written permission of NFPA. For inquires or to report unauthorized use, contact licensing@nfpa.org.

14.2.5 Encapsulated Storage Over 15 ft (4.6 m) in Height Up to and Including 20 ft (6.1 m) in Height.

14.2.5.1 Encapsulated storage over 15 ft (4.6 m) in height up to and including 20 ft (6.1 m) in height shall be limited to solid-piled and palletized storage.

14.2.5.2 Encapsulated storage over 15 ft (4.6 m) in height up to and including 20 ft (6.1 m) in height shall be protected by sprinklers with a K-factor of 11.2 (160) or larger.

14.2.5.3 Encapsulated storage over 15 ft (4.6 m) in height up to and including 20 ft (6.1 m) in height of Class I commodity shall be protected with a density/area of at least 0.46 gpm/ft^2 over 2000 ft^2 (18.7 mm/min over 186 m^2).

14.2.5.4 Encapsulated storage over 15 ft (4.6 m) in height up to and including 20 ft (6.1 m) in height of Class II commodity shall be protected with a density/area of at least 0.53 gpm/ft^2 over 2000 ft^2 (21.7 mm/min over 186 m^2).

14.2.5.5 Encapsulated storage over 15 ft (4.6 m) in height up to and including 20 ft (6.1 m) in height of Class III and Class IV commodity shall be protected with a density/area of at least 0.6 gpm/ft^2 over 2000 ft^2 (24.5 mm/min over 186 m^2).

14.3 CMSA Sprinklers for Palletized or Solid-Piled Storage of Class I Through Class IV Commodities.

14.3.1 Protection of palletized and solid-piled storage of Class I through Class IV commodities shall be in accordance with Table 14.3.1.

Table 14.3.1 CMSA Sprinkler Design Criteria for Palletized and Solid-Piled Storage of Class I Through Class IV Commodities (Encapsulated and Nonencapsulated)

Configuration	Commodity Class	Maximum Storage Height		Maximum Ceiling/Roof Height		K-Factor/ Orientation	Type of System	Number of Design Sprinklers	Minimum Operating Pressure	
		ft	m	ft	m				psi	bar
Palletized	Class I or II	25	7.6	30	9.1	11.2 (160) Upright	Wet	15	25	1.7
							Dry	25	25	1.7
						16.8 (240) Upright	Wet	15	10	0.7
							Dry	25	15	1.0
						19.6 (280) Pendent	Wet	15	16	1.1
				35	10.6	11.2 (160) Upright	Wet	15	25	1.7
							Dry	25	25	1.7
						16.8 (240) Upright	Wet	15	15	1.0
							Dry	25	15	1.0
		30	9.1	35	10.6	19.6 (280) Pendent	Wet	15	25	1.7
		35	10.6	40	12.1	19.6 (280) Pendent	Wet	15	30	2.1
	Class III	25	7.6	30	9.1	11.2 (160) Upright	Wet	15	25	1.7
							Dry	25	25	1.7
						16.8 (240) Upright	Wet	15	15	1.0
							Dry	25	15	1.0
						19.6 (280) Pendent	Wet	15	16	1.1
				35	10.6	11.2 (160) Upright	Wet	15	25	1.7
							Dry	25	25	1.7
						16.8 (240) Upright	Wet	15	15	1.0
							Dry	25	15	1.0
		30	9.1	35	10.6	19.6 (280) Pendent	Wet	15	25	1.7
		35	10.6	40	12.1	19.6 (280) Pendent	Wet	15	30	2.1

(continues)

Copyright 2014 National Fire Protection Association (NFPA). Licensed, by agreement, for individual use and download on October 4, 2014 to LEADER and READER for designated user PATTARAPORN SRITRAKOOL. No other reproduction or transmission in any form permitted without written permission of NFPA. For inquires or to report unauthorized use, contact licensing@nfpa.org.

Table 14.3.1 *Continued*

Configuration	Commodity Class	Maximum Storage Height		Maximum Ceiling/Roof Height		K-Factor/ Orientation	Type of System	Number of Design Sprinklers	Minimum Operating Pressure	
		ft	m	ft	m				psi	bar
Palletized	Class IV	20	6.1	30	9.1	11.2 (160) Upright	Wet	20	25	1.7
								15	50	3.5
						16.8 (240) Upright	Wet	20	15	1.0
								15	22	1.5
						19.6 (280) Pendent	Wet	15	16	1.1
		25	7.6	30	9.1	16.8 (240) Upright	Wet	15	22	1.5
						19.6 (280) Pendent	Wet	15	16	1.1
		30	9.1	35	10.6	19.6 (280) Pendent	Wet	15	25	1.7
		35	10.6	40	12.1	19.6 (280) Pendent	Wet	15	30	2.1
Solid piled	Class I or II	20	6.1	30	9.1	11.2 (160) Upright	Wet	15	25	1.7
							Dry	25	25	1.7
						16.8 (240) Upright	Wet	15	10	0.7
							Dry	25	15	1.0
						19.6 (280) Pendent	Wet	15	16	1.1
		25	7.6	30	9.1	16.8 (240) Upright	Wet	15	10	0.7
						19.6 (280) Pendent	Wet	15	16	1.1
		30	9.1	35	10.6	19.6 (280) Pendent	Wet	15	25	1.7
		35	10.6	40	12.1	19.6 (280) Pendent	Wet	15	30	2.1
	Class III	20	6.1	30	9.1	11.2 (160) Upright	Wet	15	25	1.7
							Dry	25	25	1.7
						16.8 (240) Upright	Wet	15	15	1.0
							Dry	25	15	1.0
						19.6 (280) Pendent	Wet	15	16	1.1
		25	7.6	30	9.1	16.8 (240) Upright	Wet	15	22	1.5
						19.6 (280) Pendent	Wet	15	16	1.1
		30	9.1	35	10.6	19.6 (280) Pendent	Wet	15	25	1.7
		35	10.6	40	12.1	19.6 (280) Pendent	Wet	15	30	2.1

Copyright 2014 National Fire Protection Association (NFPA). Licensed, by agreement, for individual use and download on October 4, 2014 to LEADER and READER for designated user PATTARAPORN SRITRAKOOL. No other reproduction or transmission in any form permitted without written permission of NFPA. For inquires or to report unauthorized use, contact licensing@nfpa.org.

Table 14.3.1 *Continued*

Configuration	Commodity Class	Maximum Storage Height ft	Maximum Storage Height m	Maximum Ceiling/Roof Height ft	Maximum Ceiling/Roof Height m	K-Factor/ Orientation	Type of System	Number of Design Sprinklers	Minimum Operating Pressure psi	Minimum Operating Pressure bar
	Class IV	20	6.1	30	9.1	11.2 (160) Upright	Wet	15	50	3.5
						16.8 (240) Upright	Wet	15	22	1.5
						19.6 (280) Pendent	Wet	15	16	1.1
		25	7.6	30	9.1	16.8 (240) Upright	Wet	15	22	1.5
						19.6 (280) Pendent	Wet	15	16	1.1
		30	9.1	35	10.6	19.6 (280) Pendent	Wet	15	25	1.7
		35	10.6	40	12.1	19.6 (280) Pendent	Wet	15	30	2.1

14.3.2 Protection shall be provided as specified in Table 14.3.1 or appropriate NFPA standards in terms of minimum operating pressure and the number of sprinklers to be included in the design area.

14.3.3 Open Wood Joist Construction.

14.3.3.1 Where CMSA sprinklers are installed under open wood joist construction, their minimum operating pressure shall be 50 psi (3.4 bar) for a K-11.2 (160) sprinkler or 22 psi (1.5 bar) for a K-16.8 (240) sprinkler.

14.3.3.2 For CMSA sprinklers, where each joist channel of open wood joist construction is fully firestopped to its full depth at intervals not exceeding 20 ft (6.1 m), the lower pressures specified in Table 14.3.1 shall be permitted to be used.

14.3.4 Hose stream allowance and water supply duration requirements shall be in accordance with Table 14.3.1.

14.3.5 Preaction Systems.

14.3.5.1 For the purpose of using Table 14.3.1, preaction systems shall be classified as dry pipe systems.

14.3.6 Building steel shall not require special protection where Table 14.3.1 are applied as appropriate for the storage configuration.

14.4 Early Suppression Fast-Response (ESFR) Sprinklers for Palletized or Solid-Piled Storage of Class I Through Class IV Commodities.

14.4.1 Protection of palletized and solid-piled storage of Class I through Class IV commodities shall be in accordance with Table 14.4.1.

14.4.2 ESFR sprinkler systems shall be designed such that the minimum operating pressure is not less than that indicated in Table 14.4.1 for commodity, storage height, and building height involved.

14.4.3 The design area shall consist of the most hydraulically demanding area of 12 sprinklers, consisting of four sprinklers on each of three branch lines.

14.5 Special Design for Palletized, Solid-Piled, Bin Box, or Shelf Storage of Class I Through Class IV Commodities.

14.5.1 Bin Box and Shelf Storage.

14.5.1.1 Bin box and shelf storage that is over 12 ft (3.7 m) but not in excess of the height limits of 14.2.1 and that is provided with walkways at vertical intervals of not over 12 ft (3.7 m) shall be protected with automatic sprinklers under the walkway(s).

14.5.1.2 Protection shall be as follows:

(1) Ceiling design density shall be based on the total height of storage within the building.
(2) Automatic sprinklers under walkways shall be designed to maintain a minimum discharge pressure of 15 psi (1 bar) for the most hydraulically demanding six sprinklers on each level. Walkway sprinkler demand shall not be required to be added to the ceiling sprinkler demand. Sprinklers under walkways shall not be spaced more than 8 ft (2.4 m) apart horizontally.

14.6 High-Expansion Foam — Reduction to Ceiling Density. A reduction in ceiling density to one-half that required for Class I through Class IV commodities, idle pallets, or plastics shall be permitted without revising the design area, but the density shall be no less than 0.15 gpm/ft^2 (6.1 mm/min).

Copyright 2014 National Fire Protection Association (NFPA). Licensed, by agreement, for individual use and download on October 4, 2014 to LEADER and READER for designated user PATTARAPORN SRITRAKOOL. No other reproduction or transmission in any form permitted without written permission of NFPA. For inquires or to report unauthorized use, contact licensing@nfpa.org.

Table 14.4.1 ESFR Protection of Palletized and Solid-Piled Storage of Class I Through Class IV Commodities

Commodity	Maximum Storage Height		Maximum Ceiling/Roof Height		Nominal K-Factor	Orientation	Minimum Operating Pressure	
	ft	m	ft	m			psi	bar
Class I, II, III, or IV, encapsulated and nonencapsulated (no open-top containers)	20	6.1	25	7.6	14.0 (200)	Upright/ pendent	50	3.4
					16.8 (240)	Upright/ pendent	35	2.4
					22.4 (320)	Pendent	25	1.7
					25.2 (360)	Pendent	15	1.0
	25	7.6	30	9.1	14.0 (200)	Upright/ pendent	50	3.4
					16.8 (240)	Upright/ pendent	35	2.4
					22.4 (320)	Pendent	25	1.7
					25.2 (360)	Pendent	15	1.0
			32	9.8	14.0 (200)	Upright/ pendent	60	4.1
					16.8 (240)	Pendent	42	2.9
	30	9.1	35	10.7	14.0 (200)	Upright/ pendent	75	5.2
					16.8 (240)	Upright/ pendent	52	3.6
					22.4 (320)	Pendent	35	2.4
					25.2 (360)	Pendent	20	1.4
	35	10.7	40	12.2	16.8 (240)	Upright/ pendent	52	3.6
					22.4 (320)	Pendent	40	2.8
					25.2 (360)	Pendent	25	1.7
	35	10.7	45	13.7	22.4 (320)	Pendent	40	2.8
					25.2 (360)	Pendent	40	2.8
	40	12.2	45	13.7	22.4 (320)	Pendent	40	2.8
					25.2 (360)	Pendent	40	2.8

Copyright 2014 National Fire Protection Association (NFPA). Licensed, by agreement, for individual use and download on October 4, 2014 to LEADER and READER for designated user PATTARAPORN SRITRAKOOL. No other reproduction or transmission in any form permitted without written permission of NFPA. For inquires or to report unauthorized use, contact licensing@nfpa.org.

Chapter 15 Protection for Palletized, Solid-Piled, Bin Box, Shelf, or Back-to-Back Shelf Storage of Plastic and Rubber Commodities

15.1 General. This chapter shall apply to palletized, solid-piled, bin box, shelf, or back-to-back shelf storage of plastic and rubber commodities. The requirements of Chapter 12 shall apply unless modified by this chapter.

15.1.1* Storage Conditions. The design of the sprinkler system shall be based on those conditions that routinely or periodically exist in a building and create the greatest water demand, which include the following:

(1) Pile height
(2) Clearance to ceiling
(3) Pile stability
(4) Array

15.2* Control Mode Density/Area Sprinkler Protection Criteria for Palletized, Solid-Piled, Bin Box, Shelf, or Back-to-Back Shelf Storage of Plastic and Rubber Commodities.

15.2.1 For the storage of Group A plastics stored 5 ft (1.5 m) or less in height, the sprinkler design criteria for miscellaneous storage specified in Chapter 13 shall be used. The protection criteria in Chapter 13 shall be acceptable for storage of Group A plastic commodities up to and including 5 ft (1.5 m) in height. *(See Table 13.2.1 for specific Group A plastic storage height protection criteria.)*

15.2.2* Protection for plastic and rubber commodities shall be in accordance with Section 15.2. The decision tree shown in Figure 15.2.2 shall be used to determine the protection in each specific situation, subject to the following limitations:

(1) Commodities that are stored palletized, solid piled, or in bin boxes up to 25 ft (7.6 m) in height.
(2) Commodities that are stored in shelf storage up to 15 ft (4.6 m) in height.
(3) Commodities that are stored using back-to-back shelf storage up to 15 ft (4.6 m) in height. The minimum aisle width shall be 60 in. (1524 mm). The design criteria shall be in accordance with Table 15.2.2. The back-to-back shelf shall have a full height solid vertical transverse barrier of ⅜ in. (9.5 mm) plywood or particleboard, 22 gauge sheet metal, or equivalent, from face of aisle to face of aisle, spaced at a maximum 45 ft (13.7 m) interval. The transverse barrier shall be permitted to terminate at the longitudinal barrier.

Table 15.2.2 Back-to-Back Shelf Storage of Cartoned Unexpanded Group A Plastics

Storage Height		Ceiling Height		Protection	
ft	m	ft	m		
Over 5 up to 8	1.5/2.4	Up to 14	4.3	Ordinary Hazard Group 2	
Up to 12	3.7	Up to 15	4.6	0.45 gpm/ft^2 over 2500 ft^2	18.3 mm/min/232 m^2
Up to 12	3.7	Up to 30	9.1	0.6 gpm/ft^2 over 2500 ft^2	24.5 mm/min/232 m^2
Up to 15	4.6	Up to 30	9.1	0.7 gpm/ft^2 over 2500 ft^2	28.5 mm/min/232 m^2

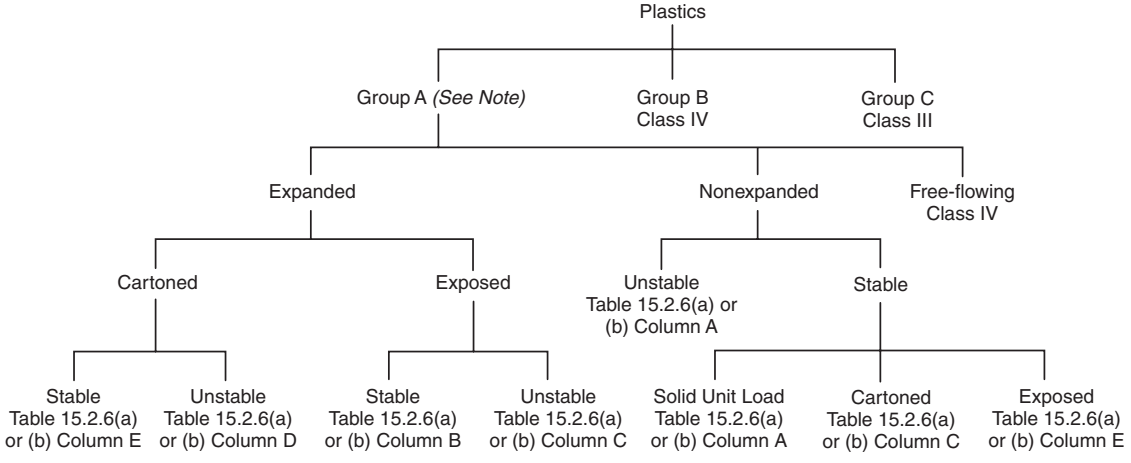

Note: Cartons that contain Group A plastic material are permitted to be treated as Class IV commodities under the following conditions:

(1) There are multiple layers of corrugation or equivalent outer material that would significantly delay fire involvement of the Group A plastic.
(2) The amount and arrangement of Group A plastic material within an ordinary carton would not be expected to significantly increase the fire hazard.

FIGURE 15.2.2 Decision Tree.

Copyright 2014 National Fire Protection Association (NFPA). Licensed, by agreement, for individual use and download on October 4, 2014 to LEADER and READER for designated user PATTARAPORN SRITRAKOOL. No other reproduction or transmission in any form permitted without written permission of NFPA. For inquires or to report unauthorized use, contact licensing@nfpa.org.

15.2.3* Factors affecting protection requirements such as closed/open array, clearance to ceiling, and stable/unstable piles shall be applicable only to storage of Group A plastics. This decision tree also shall be used to determine protection for commodities that are not wholly Group A plastics but contain such quantities and arrangements of the same that they are deemed more hazardous than Class IV commodities.

15.2.4 Group B plastics and free-flowing Group A plastics shall be protected in the same manner as a Class IV commodity. *(See Chapter 14 for protection of these storage commodities with spray sprinklers.)*

15.2.5 Group C plastics shall be protected in the same manner as a Class III commodity. *(See Chapter 14 for protection of these storage commodities with spray sprinklers.)*

15.2.6* Design areas and densities for the appropriate storage configuration shall be selected from Table 15.2.6(a) or Table 15.2.6(b) as appropriate.

15.2.7 The ceiling-only protection criteria specified in Chapter 17 for rack storage of plastic and rubber commodities shall be permitted to be used for solid-piled and palletized storage of the same commodity at the same height and clearance to ceiling.

15.2.8 For Table 15.2.6(a) and Table 15.2.6(b), the design areas shall be as follows:

(1) The area shall be a minimum of 2500 ft^2 (232 m^2).
(2) Where Table 15.2.6(a) and Table 15.2.6(b) allow densities and areas to be selected in accordance with Curve EH1 and Curve EH2 of Figure 13.2.1, any density/area from the curves in Figure 13.2.1 shall be permitted. When selecting a point from the EH1 or EH2 density/area curves of Figure 13.2.1, the following area reductions shall be permitted:
   (a) For K-8.0 (115) sprinklers used with Curve EH1, the design area shall be permitted to be reduced by 25 percent, but not below 2000 ft^2 (186 m^2), where high temperature sprinklers are used.
   (b) For K-11.2 (160) or larger sprinklers, the design area shall be permitted to be reduced by 25 percent, but not below 2000 ft^2 (186 m^2), regardless of temperature rating.
(3) For closed arrays, the area shall be permitted to be reduced to 2000 ft^2 (186 m^2).

15.2.9* Interpolation of densities between storage heights shall be permitted.

15.2.9.1 Densities shall be based on the 2500 ft^2 (232 m^2) design area.

15.2.9.2 Interpolation of ceiling/roof heights shall not be permitted.

Table 15.2.6(a) Design Densities for Palletized, Solid-Piled, Bin Box, or Shelf Storage of Plastic and Rubber Commodities (U.S. Customary Units)

Maximum Storage Height (ft)	Roof/Ceiling Height (ft)	Density (gpm/ft^2)				
		A	B	C	D	E
>5 to ≤12	Up to 15	0.2	EH2	0.3	EH1	EH2
	>15 to 20	0.3	0.6	0.5	EH2	EH2
	>20 to 32	0.4	0.8	0.6	0.45	0.7
15	Up to 20	0.3	0.6	0.5	0.4	0.45
	>20 to 25	0.4	0.8	0.6	0.45	0.7
	>25 to 35	0.45	0.9	0.7	0.55	0.85
20	Up to 25	0.4	0.8	0.6	0.45	0.7
	>25 to 30	0.45	0.9	0.7	0.55	0.85
	>30 to 35	0.6	1.2	0.85	0.7	1.1
25	Up to 30	0.45	0.9	0.7	0.55	0.85
	>30 to 35	0.6	1.2	0.85	0.7	1.1

Notes:
(1) Minimum clearance between sprinkler deflector and top of storage shall be maintained as required.
(2) Column designations correspond to the configuration of plastics storage as follows:
A: (1) Nonexpanded, unstable
(2) Nonexpanded, stable, solid unit load
B: Expanded, exposed, stable
C: (1) Expanded, exposed, unstable
(2) Nonexpanded, stable, cartoned
D: Expanded, cartoned, unstable
E: (1) Expanded, cartoned, stable
(2) Nonexpanded, stable, exposed
(3) EH1 = Density required by Figure 13.2.1 for Curve EH1
EH2 = Density required by Figure 13.2.1 for Curve EH2
(4) Roof/ceiling height >35 ft is not permitted.

Copyright 2014 National Fire Protection Association (NFPA). Licensed, by agreement, for individual use and download on October 4, 2014 to LEADER and READER for designated user PATTARAPORN SRITRAKOOL. No other reproduction or transmission in any form permitted without written permission of NFPA. For inquires or to report unauthorized use, contact licensing@nfpa.org.

Table 15.2.6(b) Design Densities for Palletized, Solid-Piled, Bin Box, or Shelf Storage of Plastic and Rubber Commodities (S.I. Units)

Maximum Storage Height (m)	Roof/Ceiling Height (m)	Density (mm/min)				
		A	B	C	D	E
>1.5 to ≤3.6	Up to 4.6	8.2	EH2	12.2	EH1	EH2
	>4.6 to 6.1	12.2	24.4	20.4	EH2	EH2
	>6.1 to 9.8	16.3	32.6	24.4	18.3	28.5
4.6	Up to 6.1	12.2	24.4	20.4	16.3	18.3
	>6.1 to 7.6	16.3	32.6	24.4	18.3	28.5
	>7.6 to 10.7	18.3	36.7	28.5	22.4	34.6
6.1	Up to 7.6	16.3	32.6	24.4	18.3	28.5
	>7.6 to 9.1	18.3	36.7	28.5	22.4	34.6
	>9.1 to 10.7	24.4	49.0	34.6	28.5	44.8
7.6	Up to 9.1	18.3	36.7	28.5	22.4	34.6
	>9.1 to 10.7	24.4	49.0	34.6	28.5	44.8

Notes:
(1) Minimum clearance between sprinkler deflector and top of storage shall be maintained as required.
(2) Column designations correspond to the configuration of plastics storage as follows:
A: (1) Nonexpanded, unstable
(2) Nonexpanded, stable, solid unit load
B: Expanded, exposed, stable
C: (1) Expanded, exposed, unstable
(2) Nonexpanded, stable, cartoned
D: Expanded, cartoned, unstable
E: (1) Expanded, cartoned, stable
(2) Nonexpanded, stable, exposed
(3) EH1 = Density required by Figure 13.2.1 for Curve EH1
EH2 = Density required by Figure 13.2.1 for Curve EH2
(4) Roof/ceiling height >35 ft is not permitted.

15.2.10 For storage of Group A plastics between 5 ft (1.5 m) and 12 ft (3.7 m) in height, the installation requirements for extra hazard systems shall apply.

15.3 CMSA Sprinklers for Palletized or Solid-Piled Storage of Plastic and Rubber Commodities.

15.3.1 Protection of palletized and solid-piled storage of unexpanded and expanded plastic and rubber commodities shall be in accordance with Table 15.3.1.

15.3.2 Protection shall be provided as specified in Table 15.3.1 or appropriate NFPA standards in terms of minimum operating pressure and the number of sprinklers to be included in the design area.

15.3.3 Open Wood Joist Construction.

15.3.3.1 Where CMSA sprinklers are installed under open wood joist construction, their minimum operating pressure shall be 50 psi (3.4 bar) for a K-11.2 (160) sprinkler or 22 psi (1.5 bar) for a K-16.8 (240) sprinkler.

15.3.3.2 Where each joist channel of open wood joist construction is fully firestopped to its full depth at intervals not exceeding 20 ft (6.1 m), the lower pressures specified in Table 15.3.1 shall be permitted to be used.

15.3.4 Preaction Systems. For the purpose of using Table 15.3.1, preaction systems shall be classified as dry pipe systems.

15.3.5 Building steel shall not require special protection where Table 15.3.1 is applied as appropriate for the storage configuration.

15.4 Early Suppression Fast-Response (ESFR) Sprinklers for Palletized or Solid-Piled Storage of Plastic and Rubber Commodities.

15.4.1 Protection of palletized and solid-piled storage of cartoned or uncartoned unexpanded plastic and cartoned expanded or exposed expanded plastic shall be in accordance with Table 15.4.1.

15.4.2 ESFR sprinkler systems shall be designed such that the minimum operating pressure is not less than that indicated in Table 15.4.1 for type of storage, commodity, storage height, and building height involved.

15.4.3 The design area shall consist of the most hydraulically demanding area of 12 sprinklers, consisting of four sprinklers on each of three branch lines.

15.4.4 Special Design for Palletized, Solid-Piled, Bin Box, or Shelf Storage of Plastic and Rubber Commodities. (Reserved)

15.5 High-Expansion Foam — Reduction in Ceiling Density. A reduction in ceiling density to one-half that required for Class I through Class IV commodities, idle pallets, or plastics shall be permitted without revising the design area, but the density shall be no less than 0.15 gpm/ft^2 (6.1 mm/min).

Copyright 2014 National Fire Protection Association (NFPA). Licensed, by agreement, for individual use and download on October 4, 2014 to LEADER and READER for designated user PATTARAPORN SRITRAKOOL. No other reproduction or transmission in any form permitted without written permission of NFPA. For inquires or to report unauthorized use, contact licensing@nfpa.org.

Table 15.3.1 CMSA Sprinkler Design Criteria for Palletized and Solid-Piled Storage of Plastic and Rubber Commodities

Storage Arrangement	Commodity Class	Maximum Storage Height		Maximum Ceiling/Roof Height		K-Factor/ Orientation	Type of System	Number of Design Sprinklers	Minimum Operating Pressure	
		ft	m	ft	m				psi	bar
Palletized	Cartoned unexpanded plastics	20	6.1	30	9.1	11.2 (160) Upright	Wet	25	25	1.7
						16.8 (240) Upright	Wet	15	22	1.5
						19.6 (280) Pendent	Wet	15	16	1.1
		25	7.6	30	9.1	16.8 (240) Upright	Wet	15	22	1.5
						19.6 (280) Pendent	Wet	15	16	1.1
		30	9.1	35	10.7	19.6 (280) Pendent	Wet	15	25	1.7
		35	10.6	40	12.1	19.6 (280) Pendent	Wet	15	30	2.1
Solid piled	Cartoned unexpanded plastics	20	6.1	30	9.1	11.2 (160) Upright	Wet	15	50	3.5
						16.8 (240) Upright	Wet	15	22	1.5
						19.6 (280) Pendent	Wet	15	16	1.1
		25	7.6	30	9.1	16.8 (240) Upright	Wet	15	22	1.5
						19.6 (280) Pendent	Wet	15	16	1.1
		30	9.1	35	10.7	19.6 (280) Pendent	Wet	15	25	1.7
		35	10.6	40	12.1	19.6 (280) Pendent	Wet	15	30	2.1
Palletized	Exposed unexpanded plastics	20	6.1	30	9.1	11.2 (160) Upright	Wet	25	25	1.7
						16.8 (240) Upright	Wet	15	22	1.5
		25	7.6	30	9.1	16.8 (240) Upright	Wet	15	22	1.5
	Cartoned or exposed expanded plastics	18	5.5	26	7.9	11.2 (160) Upright	Wet	15	50	3.5
						16.8 (240) Upright	Wet	15	22	1.5
Solid piled	Cartoned or exposed unexpanded plastics	20	6.1	30	9.1	11.2 (160) Upright	Wet	15	50	3.5
		25	7.6	30	9.1	16.8 (240) Upright	Wet	15	22	1.5

Copyright 2014 National Fire Protection Association (NFPA). Licensed, by agreement, for individual use and download on October 4, 2014 to LEADER and READER for designated user PATTARAPORN SRITRAKOOL. No other reproduction or transmission in any form permitted without written permission of NFPA. For inquires or to report unauthorized use, contact licensing@nfpa.org.

Table 15.4.1 ESFR Protection of Palletized and Solid-Piled Storage of Plastic and Rubber Commodities

Storage Arrangement	Commodity	Maximum Storage Height		Maximum Ceiling/Roof Height		Nominal K-Factor	Orientation	Minimum Operating Pressure	
		ft	m	ft	m			psi	bar
Palletized and solid-piled storage (no open-top containers)	Cartoned unexpanded plastic	20	6.1	25	7.6	14.0 (200)	Upright/ pendent	50	3.4
						16.8 (240)	Upright/ pendent	35	2.4
						22.4 (320)	Pendent	25	1.7
						25.2 (360)	Pendent	15	1.0
				30	9.1	14.0 (200)	Upright/ pendent	50	3.4
						16.8 (240)	Upright/ pendent	35	2.4
						22.4 (320)	Pendent	25	1.7
						25.2 (360)	Pendent	15	1.0
				35	10.7	14.0 (200)	Upright/ pendent	75	5.2
						16.8 (240)	Upright/ pendent	52	3.6
						22.4 (320)	Pendent	35	2.4
						25.2 (360)	Pendent	20	1.4
				40	12.2	16.8 (240)	Pendent	52	3.6
						22.4 (320)	Pendent	40	2.8
						25.2 (360)	Pendent	25	1.7
				45	13.7	22.4 (320)	Pendent	40	2.8
						25.2 (360)	Pendent	40	2.8
		25	7.6	30	9.1	14.0 (200)	Upright/ pendent	50	3.4
						16.8 (240)	Upright/ pendent	35	2.4
						22.4 (320)	Pendent	25	1.7
						25.2 (360)	Pendent	15	1.0
				32	9.8	14.0 (200)	Upright/ pendent	60	4.1
						16.8 (240)	Upright/ pendent	42	2.9
				35	10.7	14.0 (200)	Upright or pendent	75	5.2
						16.8 (240)	Upright/ pendent	52	3.6
						22.4 (320)	Pendent	35	2.4
						25.2 (360)	Pendent	20	1.4

(continues)

Copyright 2014 National Fire Protection Association (NFPA). Licensed, by agreement, for individual use and download on October 4, 2014 to LEADER and READER for designated user PATTARAPORN SRITRAKOOL. No other reproduction or transmission in any form permitted without written permission of NFPA. For inquires or to report unauthorized use, contact licensing@nfpa.org.

Table 15.4.1 *Continued*

Storage Arrangement	Commodity	Maximum Storage Height		Maximum Ceiling/Roof Height		Nominal K-Factor	Orientation	Minimum Operating Pressure	
		ft	m	ft	m			psi	bar
				40	12.2	16.8 (240)	Pendent	52	3.6
						22.4 (320)	Pendent	40	2.8
						25.2 (360)	Pendent	25	1.7
				45	13.7	22.4 (320)	Pendent	40	2.8
						25.2 (360)	Pendent	40	2.8
		30	9.1	35	10.7	14.0 (200)	Upright/ pendent	75	5.2
						16.8 (240)	Upright/ pendent	52	3.6
						22.4 (320)	Pendent	35	2.4
						25.2 (360)	Pendent	20	1.4
				40	12.2	16.8 (240)	Pendent	52	3.6
						22.4 (320)	Pendent	40	2.8
						25.2 (360)	Pendent	25	1.7
				45	13.7	22.4 (320)	Pendent	40	2.8
						25.2 (360)	Pendent	40	2.8
		35	10.7	40	12.2	16.8 (240)	Pendent	52	3.6
						22.4 (320)	Pendent	40	2.8
						25.2 (360)	Pendent	25	1.7
				45	13.7	22.4 (320)	Pendent	40	2.8
						25.2 (360)	Pendent	40	2.8
		40	12.2	45	13.7	22.4 (320)	Pendent	40	2.8
						25.2 (360)	Pendent	40	2.8
	Exposed unexpanded plastic	20	6.1	25	7.6	14.0 (200)	Pendent	50	3.4
						16.8 (240)	Pendent	35	2.4
				30	9.1	14.0 (200)	Pendent	50	3.4
						16.8 (240)	Pendent	35	2.4
				35	10.7	14.0 (200)	Pendent	75	5.2
						16.8 (240)	Pendent	52	3.6
				40	12.2	16.8 (240)	Pendent	52	3.6

Copyright 2014 National Fire Protection Association (NFPA). Licensed, by agreement, for individual use and download on October 4, 2014 to LEADER and READER for designated user PATTARAPORN SRITRAKOOL. No other reproduction or transmission in any form permitted without written permission of NFPA. For inquires or to report unauthorized use, contact licensing@nfpa.org.

Table 15.4.1 *Continued*

Storage Arrangement	Commodity	Maximum Storage Height		Maximum Ceiling/Roof Height		Nominal K-Factor	Orientation	Minimum Operating Pressure	
		ft	m	ft	m			psi	bar
		25	7.6	30	9.1	14.0 (200)	Pendent	50	3.4
						16.8 (240)	Pendent	35	2.4
				32	9.8	14.0 (200)	Pendent	60	4.1
						16.8 (240)	Pendent	42	2.9
				35	10.7	14.0 (200)	Pendent	75	5.2
						16.8 (240)	Pendent	52	3.6
				40	12.2	16.8 (240)	Pendent	52	3.6
						22.4 (320)	Pendent	50	3.4
						25.2 (360)	Pendent	50	3.4
		30	9.1	35	10.7	14.0 (200)	Pendent	75	5.2
						16.8 (240)	Pendent	52	3.6
				40	12.2	16.8 (240)	Pendent	52	3.6
						22.4 (320)	Pendent	50	3.4
						25.2 (360)	Pendent	50	3.4
		35	10.7	40	12.2	16.8 (240)	Pendent	52	3.6
						22.4 (320)	Pendent	50	3.4
						25.2 (360)	Pendent	50	3.4
	Cartoned expanded plastic	20	6.1	25	7.6	14.0 (200)	Upright/ pendent	50	3.4
						16.8 (240)	Upright/ pendent	35	2.4
				30	9.1	14.0 (200)	Upright/ pendent	50	3.4
						16.8 (240)	Upright/ pendent	35	2.4
		25	7.6	30	9.1	14.0 (200)	Upright/ pendent	50	3.4
						16.8 (240)	Upright/ pendent	35	2.4
				32	9.8	14.0 (200)	Pendent	60	4.1
						16.8 (240)	Upright/ pendent	42	2.9
	Exposed* expanded plastic	25	7.6	40	12.2	25.2 (360)	Pendent	60	4.1

*Applies to closed array storage only.

Copyright 2014 National Fire Protection Association (NFPA). Licensed, by agreement, for individual use and download on October 4, 2014 to LEADER and READER for designated user PATTARAPORN SRITRAKOOL. No other reproduction or transmission in any form permitted without written permission of NFPA. For inquires or to report unauthorized use, contact licensing@nfpa.org.

Chapter 16 Protection of Rack Storage of Class I Through Class IV Commodities

16.1 General.

16.1.1 This section shall apply to storage of materials representing the broad range of combustibles stored in racks. The requirements of Chapter 12 shall apply unless modified by this chapter. *(See Section C.9.)*

16.1.2* Sprinkler Protection Criteria.

16.1.2.1 Sprinkler protection criteria for the storage of materials on racks shall be in accordance with Section 16.2 for storage up to 25 ft (7.6 m) and Section 16.3 for storage over 25 ft (7.6 m).

16.1.2.2* Protection criteria for Group A plastics shall be permitted for the protection of the same storage height and configuration of Class I, II, III, and IV commodities.

16.1.3 Movable Racks. Rack storage in movable racks shall be protected in the same manner as multiple-row racks.

16.1.4 Fire Protection of Steel Columns — Columns Within Storage Racks of Class I Through Class IV and Plastic Commodities. See Section C.10.

16.1.4.1 Where fireproofing of building columns is not provided and storage heights are in excess of 15 ft (4.6 m), protection of building columns within the rack structure or vertical rack members supporting the building shall be protected in accordance with one of the following:

(1) Sidewall sprinklers at the 15 ft (4.6 m) elevation, pointed toward one side of the steel column
(2) Provision of ceiling sprinkler density for a minimum of 2000 ft^2 (186 m^2) with ordinary 165°F (74°C) or high-temperature 286°F (141°C) rated sprinklers as shown in Table 16.1.4.1 for storage heights above 15 ft (4.6 m), up to and including 20 ft (6.1 m)
(3) Provision of CMSA or ESFR ceiling sprinkler protection

Table 16.1.4.1 Ceiling Sprinkler Densities for Protection of Steel Building Columns

Commodity Classification	Aisle Width			
	4 ft (1.2 m)		8 ft (2.4 m)	
	gpm/ft^2	(L/min)/m^2	gpm/ft^2	(L/min)/m^2
Class I	0.37	15.1	0.33	13.5
Class II	0.44	17.9	0.37	15.1
Class III	0.49	20.0	0.42	17.1
Class IV	0.68	27.7	0.57	23.2

16.1.4.1.1 This protection shall not be required where storage in fixed racks is protected by in-rack sprinklers.

16.1.4.2 The flow from a column sprinkler(s) shall be permitted to be omitted from the sprinkler system hydraulic calculations.

16.1.5 High-Expansion Foam.

16.1.5.1 High-Expansion Foam Ceiling Sprinkler Density.

16.1.5.1.1 Where high-expansion foam systems are used in combination with ceiling sprinklers, the minimum ceiling sprinkler design density shall be 0.2 gpm/ft^2 (8.1 mm/min) for Class I, Class II, or Class III commodities or 0.25 gpm/ft^2 (10.2 mm/min) for Class IV commodities for the most hydraulically remote 2000 ft^2 (186 m^2) operating area.

16.1.5.1.2 Where high-expansion foam systems are used in combination with ceiling sprinklers, the maximum submergence time shall be 7 minutes for Class I, Class II, or Class III commodities and 5 minutes for Class IV commodities.

16.1.5.1.3 Where high-expansion foam systems are used for storage over 25 ft (7.6 m) high up to and including 35 ft (10.7 m) high, they shall be used in combination with ceiling sprinklers.

16.1.5.1.3.1 The maximum submergence time for the high-expansion foam shall be 5 minutes for Class I, Class II, or Class III commodities and 4 minutes for Class IV commodities.

16.1.5.2 In-rack sprinklers shall not be required where high-expansion foam systems are used in combination with ceiling sprinklers.

16.1.5.3 Detectors for High-Expansion Foam Systems.

16.1.5.3.1 Detectors shall be listed and shall be installed in one of the following configurations:

(1) At the ceiling only where installed at one-half the listed linear spacing [e.g., 15 ft × 15 ft (4.6 m × 4.6 m) rather than at 30 ft × 30 ft (9.1 m × 9.1 m)]; at the ceiling at the listed spacing and in racks at alternate levels
(2) Where listed for rack storage installation and installed in accordance with the listing to provide response within 1 minute after ignition using an ignition source that is equivalent to that used in a rack storage testing program

16.1.5.3.2 Ceiling detectors alone shall not be used where the clearance to ceiling exceeds 10 ft (3.1 m) or the height of the storage exceeds 25 ft (7.6 m).

16.1.5.4 Detectors for preaction systems shall be installed in accordance with 16.1.5.3.

16.1.6 Solid Shelf Rack.

16.1.6.1 Where solid shelving in single-, double-, and multiple-row racks exceeds 20 ft^2 (1.86 m^2) but does not exceed 64 ft^2 (5.95 m^2) in area, sprinklers shall not be required below every shelf, but shall be installed at the ceiling and below shelves at intermediate levels not more than 6 ft (2 m) apart vertically. *(See Section C.11.)*

16.1.6.2 Where solid shelving in single-, double-, and multiple-row racks exceeds 64 ft^2 (5.95 m^2) in area or where the levels of storage exceed 6 ft (2 m), sprinklers shall be installed at the ceiling and below each level of shelving.

16.1.6.3 Where multiple-row racks of any height have no longitudinal flue or where double-row racks with storage up 25 ft (7.6 m) in height have no longitudinal flue, the situation shall not be considered solid shelves where transverse flues exist at maximum 5 ft (1.5 m) intervals and additional in-rack sprinklers shall not be required in accordance with 16.1.6.1 and 16.1.6.2.

16.1.6.4 The maximum horizontal spacing between in-rack sprinklers shall be 10 ft (3.1 m).

16.1.6.5 Where the criteria in 16.1.6.5 are not met, the water demand for the in-rack sprinklers shall be based on a minimum flow of 30 gpm (114 L/min) discharging from the fol-

Copyright 2014 National Fire Protection Association (NFPA). Licensed, by agreement, for individual use and download on October 4, 2014 to LEADER and READER for designated user PATTARAPORN SRITRAKOOL. No other reproduction or transmission in any form permitted without written permission of NFPA. For inquires or to report unauthorized use, contact licensing@nfpa.org.

lowing number of sprinklers balanced to the ceiling sprinkler demand in accordance with Section 23.8:

(1) Six sprinklers where only one level of in-rack sprinklers is installed to protect Class I, Class II, or Class III commodity
(2) Eight sprinklers where only one level of in-rack sprinklers is installed to protect Class IV commodity
(3) Ten sprinklers (five on each of the top two levels) where more than one level of in-rack sprinklers is installed to protect Class I, Class II, or Class III commodity
(4) Fourteen sprinklers (seven on each of the top two levels) when more than one level of in-rack sprinklers is installed to protect Class IV commodity

16.1.6.6 The water demand for in-rack sprinklers shall not be required to be balanced to the ceiling sprinkler demand where additional face sprinklers are installed under each solid shelf at rack uprights and the in-rack sprinklers are calculated to discharge at least 60 gpm (227 L/min) from eight sprinklers.

16.1.7 Open-Top Containers. The protection of open-top containers shall be considered outside the scope of Chapter 16. *See Section C.12.*

16.1.8 In-Rack Sprinklers.

16.1.8.1 The number of sprinklers and the pipe sizing on a line of sprinklers in racks shall be restricted only by hydraulic calculations and not by any piping schedule.

16.1.8.2 When in-rack sprinklers are necessary to protect a higher-hazard commodity that occupies only a portion of the length of a rack, in-rack sprinklers shall be extended a minimum of 8 ft (2.44 m) or one bay, whichever is greater, in each direction along the rack on either side of the higher hazard. The in-rack sprinklers protecting the higher hazard shall not be required to extend across the aisle.

16.1.8.3 Where a storage rack, due to its length, requires less than the number of in-rack sprinklers specified, only those in-rack sprinklers in a single rack shall be included in the calculation.

16.1.9* Horizontal Barriers and In-Rack Sprinklers.

16.1.9.1 Where required by other sections of this standard, horizontal barriers used in conjunction with in-rack sprinklers to impede vertical fire development shall be constructed of sheet metal, wood, or similar material and shall extend the full length and depth of the rack.

16.1.9.2 Barriers shall be fitted within 2 in. (51 mm) horizontally around rack uprights.

16.1.10 Flue Space Requirements for Storage Up to and Including 25 ft (7.6 m). See Section C.13.

16.1.10.1 In double-row and multiple-row racks without solid shelves, a longitudinal (back-to-back clearance between loads) flue space shall not be required.

16.1.10.2 Nominal 6 in. (152.4 mm) transverse flue spaces between loads and at rack uprights shall be maintained in single-row, double-row, and multiple-row racks.

16.1.10.3 Random variations in the width of flue spaces or in their vertical alignment shall be permitted.

16.1.11 Flue Space Requirements for Storage Over 25 ft (7.6 m).

16.1.11.1 Nominal 6 in. (152.4 mm) transverse flue spaces between loads and at rack uprights shall be maintained in single-row, double-row, and multiple-row racks.

16.1.11.1.1 Nominal 6 in. (152.4 mm) longitudinal flue spaces shall be provided in double-row racks.

16.1.11.1.2 Random variations in the width of the flue spaces or in their vertical alignment shall be permitted.

16.1.11.2 In single-row, double-row, or multiple-row racks, a minimum 6 in. (152.4 mm) vertical clear space shall be maintained between the in-rack sprinkler deflectors and the top of a tier of storage.

16.1.11.2.1 Face sprinklers in such racks shall be located within the rack a minimum of 3 in. (76 mm) from rack uprights and no more than 18 in. (460 mm) from the aisle face of storage.

16.1.11.2.2 Longitudinal flue in-rack sprinklers shall be located at the intersection with the transverse flue space and with the deflector located at or below the bottom of horizontal load beams or above or below other adjacent horizontal rack members.

16.1.11.2.3 Such in-rack sprinklers shall be a minimum of 3 in. (76 mm) radially from the side of the rack uprights.

16.2 Protection Criteria for Rack Storage of Class I Through Class IV Commodities Stored Up to and Including 25 ft (7.6 m) in Height.

16.2.1 Control Mode Density/Area Sprinkler Protection Criteria for Rack Storage of Class I Through Class IV Commodities Stored Up to and Including 25 ft (7.6 m) in Height.

16.2.1.1 The area and density for the hydraulically remote area and the water supply shall be determined as specified in 16.2.1.2 for storage up to 12 ft (3.7 m) and 16.2.1.3 to 16.2.1.3.5 for storage over 12 ft (3.7 m).

16.2.1.2 Protection Criteria for Rack Storage of Class I Through Class IV Commodities Stored Up to 12 ft (3.7 m) in Height.

16.2.1.2.1 The protection criteria for storage up to and including 12 ft (3.7 m) shall be the same as miscellaneous storage from Chapter 13.

16.2.1.2.2 The protection criteria in Chapter 13 shall be acceptable for storage of Class I through Class IV commodities up to and including 12 ft (3.7 m) in height. *(See Table 13.2.1 for specific Class I through Class IV storage height protection criteria.)*

16.2.1.3 Protection Criteria for Rack Storage of Class I Through Class IV Commodities Stored Over 12 ft (3.7 m) in Height.

16.2.1.3.1* Ceiling sprinkler water demand shall be determined in accordance with 16.2.1.3.2 for single- and double-row racks or 16.2.1.3.3 for multiple-row racks. *(See Section C.14.)*

16.2.1.3.2* For single- or double-row racks for Class I, Class II, Class III, or Class IV commodities, encapsulated or nonencapsulated in single- or double-row racks, ceiling sprinkler water demand in terms of density [gpm/ft^2 (mm/min)] and area of sprinkler operation [ft^2 (m^2) of ceiling or roof] shall be selected from the density/area curves of Figure 16.2.1.3.2(a) through Figure 16.2.1.3.2(g) that are appropriate for each commodity and configuration as shown in Table 16.2.1.3.2 and shall be modified as appropriate by 16.2.1.3.4. These requirements shall apply to portable racks arranged in the same manner as single- or double-row racks.

Copyright 2014 National Fire Protection Association (NFPA). Licensed, by agreement, for individual use and download on October 4, 2014 to LEADER and READER for designated user PATTARAPORN SRITRAKOOL. No other reproduction or transmission in any form permitted without written permission of NFPA. For inquires or to report unauthorized use, contact licensing@nfpa.org.

Table 16.2.1.3.2 Single- or Double-Row Racks — Storage Height Over 12 ft (3.7 m) Up to and Including 25 ft (7.6 m)

Height	Commodity Class	Encapsulated	Aisles*		Sprinklers Mandatory In-Rack	Ceiling Sprinkler Water Demand					
						With In-Rack Sprinklers			Without In-Rack Sprinklers		
			ft	m		Figure	Curves	Apply Figure 16.2.1.3.4.1	Figure	Curves	Apply Figure 16.2.1.3.4.1
Over 12 ft (3.7 m) up to and including 20 ft (6.1 m)	I	No	4	1.2	No	16.2.1.3.2(a)	C and D	Yes	16.2.1.3.2(a)	F and H	Yes
			8	2.4			A and B			E and G	
		Yes	4	1.2	No	16.2.1.3.2(e)	C and D		16.2.1.3.2(e)	G and H	Yes
			8	2.4			A and B			E and F	
	II	No	4	1.2	No	16.2.1.3.2(b)	C and D		16.2.1.3.2(b)	G and H	Yes
			8	2.4			A and B			E and F	
		Yes	4	1.2	No	16.2.1.3.2(e)	C and D		16.2.1.3.2(e)	G and H	Yes
			8	2.4			A and B			E and F	
	III	No	4	1.2	No	16.2.1.3.2(c)	C and D		16.2.1.3.2(c)	G and H	Yes
			8	2.4			A and B			E and F	
		Yes	4	1.2	1 level	16.2.1.3.2(f)	C and D		—	—	—
			8	2.4			A and B				
	IV	No	4	1.2	No	16.2.1.3.2(d)	C and D		16.2.1.3.2(d)	G and H	Yes
			8	2.4			A and B			E and F	
		Yes	4	1.2	1 level	16.2.1.3.2(g)	C and D		—	—	—
			8	2.4			A and B				
Over 20 ft (6.1 m) up to and including 22 ft (6.7 m)	I	No	4	1.2	No	16.2.1.3.2(a)	C and D	No	16.2.1.3.2(a)	F and H	Yes
			8	2.4			A and B			E and G	
		Yes	4	1.2	1 level	16.2.1.3.2(e)	C and D		—	—	—
			8	2.4			A and B				
	II	No	4	1.2	No	16.2.1.3.2(b)	C and D		16.2.1.3.2(b)	G and H	Yes
			8	2.4			A and B			E and F	
		Yes	4	1.2	1 level	16.2.1.3.2(e)	C and D		—	—	—
			8	2.4			A and B				
	III	No	4	1.2	No	16.2.1.3.2(c)	C and D		16.2.1.3.2(c)	G and H	Yes
			8	2.4			A and B			E and F	
		Yes	4	1.2	1 level	16.2.1.3.2(f)	C and D		—	—	—
			8	2.4			A and B				
	IV	No	4	1.2	No	16.2.1.3.2(d)	C and D		16.2.1.3.2(d)	G and H	Yes
			8	2.4			A and B			E and F	
		Yes	4	1.2	1 level	16.2.1.3.2(g)	C and D		—	—	—
			8	2.4			A and B				

Copyright 2014 National Fire Protection Association (NFPA). Licensed, by agreement, for individual use and download on October 4, 2014 to LEADER and READER for designated user PATTARAPORN SRITRAKOOL. No other reproduction or transmission in any form permitted without written permission of NFPA. For inquires or to report unauthorized use, contact licensing@nfpa.org.

Table 16.2.1.3.2 *Continued*

Height	Commodity Class	Encapsulated	Aisles* ft	Aisles* m	Sprinklers Mandatory In-Rack	Ceiling Sprinkler Water Demand: With In-Rack Sprinklers: Figure	Curves	Apply Figure 16.2.1.3.4.1	Without In-Rack Sprinklers: Figure	Curves	Apply Figure 16.2.1.3.4.1
Over 22 ft (6.7 m) up to and including 25 ft (7.6 m)	I	No	4	1.2	No	16.2.1.3.2(a)	C and D	No	16.2.1.3.2(a)	F and H	Yes
			8	2.4			A and B			E and G	
		Yes	4	1.2	1 level	16.2.1.3.2(e)	C and D		—	—	—
			8	2.4			A and B				
	II	No	4	1.2	No	16.2.1.3.2(b)	C and D		16.2.1.3.2(b)	G and H	Yes
			8	2.4			A and B			E and F	
		Yes	4	1.2	1 level	16.2.1.3.2(e)	C and D		—	—	—
			8	2.4			A and B				
	III	No	4	1.2	No	16.2.1.3.2(c)	C and D		16.2.1.3.2(c)	G and H	Yes
			8	2.4			A and B			E and F	
		Yes	4	1.2	1 level	16.2.1.3.2(f)	C and D		—	—	—
			8	2.4			A and B				
	IV	No	4	1.2	1 level	16.2.1.3.2(d)	C and D		—	—	—
			8	2.4			A and B				
		Yes	4	1.2		16.2.1.3.2(g)	C and D		—	—	—
			8	2.4			A and B				

*See 16.2.1.3.2.1 for interpolation of aisle widths.

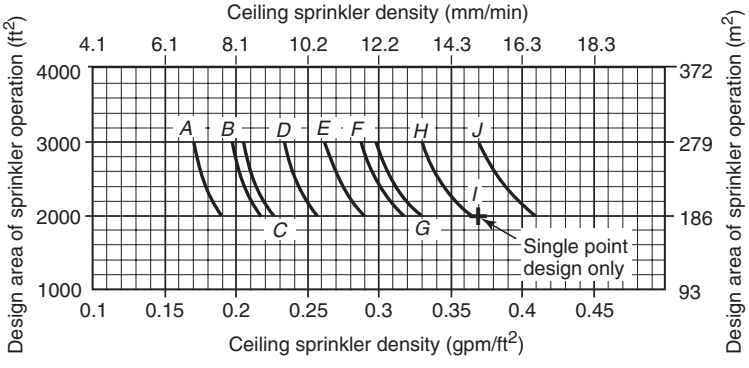

Curve **Legend**

A — Single- or double-row racks with 8 ft (2.44 m) aisles with high-temperature ceiling sprinklers and ordinary-temperature in-rack sprinklers

B — Single- or double-row racks with 8 ft (2.44 m) aisles with ordinary-temperature ceiling sprinklers and ordinary-temperature in-rack sprinklers

C — Single- or double-row racks with 4 ft (1.22 m) aisles or multiple-row racks with high-temperature ceiling sprinklers and ordinary-temperature in-rack sprinklers

D — Single- or double-row racks with 4 ft (1.22 m) aisles or multiple-row racks with ordinary-temperature ceiling sprinklers and ordinary-temperature in-rack sprinklers

Curve **Legend**

E — Single- or double-row racks with 8 ft (2.44 m) aisles and high-temperature ceiling sprinklers

F — Single- or double-row racks with 4 ft (1.22 m) aisles and high-temperature ceiling sprinklers

G — Single- or double-row racks with 8 ft (2.44 m) aisles and ordinary-temperature ceiling sprinklers

H — Single- or double-row racks with 4 ft (1.22 m) aisles and ordinary-temperature ceiling sprinklers

I — Multiple-row racks with 8 ft (2.44 m) or wider aisles and high-temperature ceiling sprinklers

J — Multiple-row racks with 8 ft (2.44 m) or wider aisles and ordinary-temperature ceiling sprinklers

FIGURE 16.2.1.3.2(a) Sprinkler System Design Curves — 20 ft (6.1 m) High Rack Storage — Class I Nonencapsulated Commodities — Conventional Pallets.

Copyright 2014 National Fire Protection Association (NFPA). Licensed, by agreement, for individual use and download on October 4, 2014 to LEADER and READER for designated user PATTARAPORN SRITRAKOOL. No other reproduction or transmission in any form permitted without written permission of NFPA. For inquires or to report unauthorized use, contact licensing@nfpa.org.

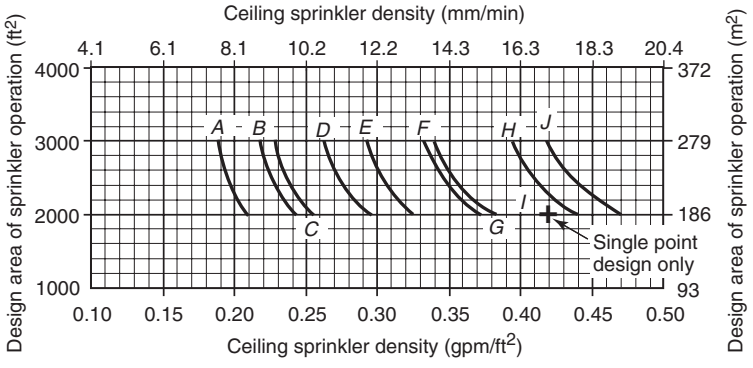

Curve	Legend
A	Single- or double-row racks with 8 ft (2.44 m) aisles with high-temperature ceiling sprinklers and ordinary-temperature in-rack sprinklers
B	Single- or double-row racks with 8 ft (2.44 m) aisles with ordinary-temperature ceiling sprinklers and ordinary-temperature in-rack sprinklers
C	Single- or double-row racks with 4 ft (1.22 m) aisles or multiple-row racks with high-temperature ceiling sprinklers and ordinary-temperature in-rack sprinklers
D	Single- or double-row racks with 4 ft (1.22 m) aisles or multiple-row racks with ordinary-temperature ceiling sprinklers and ordinary-temperature in-rack sprinklers
E	Single- or double-row racks with 8 ft (2.44 m) aisles and high-temperature ceiling sprinklers
F	Single- or double-row racks with 8 ft (2.44 m) aisles and ordinary-temperature ceiling sprinklers
G	Single- or double-row racks with 4 ft (1.22 m) aisles and high-temperature ceiling sprinklers
H	Single- or double-row racks with 4 ft (1.22 m) aisles and ordinary-temperature ceiling sprinklers
I	Multiple-row racks with 8 ft (2.44 m) or wider aisles and high-temperature ceiling sprinklers
J	Multiple-row racks with 8 ft (2.44 m) or wider aisles and ordinary-temperature ceiling sprinklers

FIGURE 16.2.1.3.2(b) Sprinkler System Design Curves — 20 ft (6.1 m) High Rack Storage — Class II Nonencapsulated Commodities — Conventional Pallets.

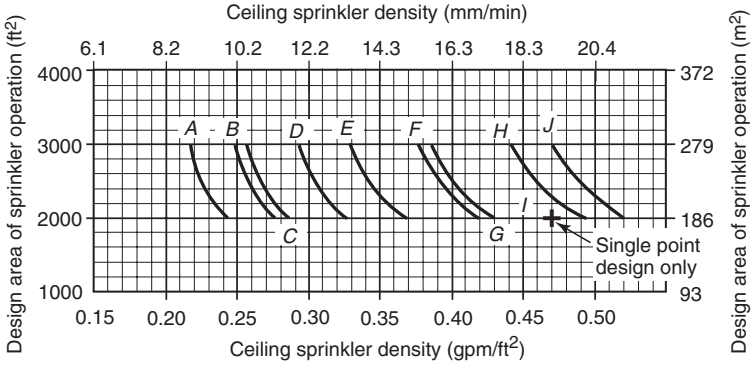

Curve	Legend
A	Single- or double-row racks with 8 ft (2.44 m) aisles with high-temperature ceiling sprinklers and ordinary-temperature in-rack sprinklers
B	Single- or double-row racks with 8 ft (2.44 m) aisles with ordinary-temperature ceiling sprinklers and ordinary-temperature in-rack sprinklers
C	Single- or double-row racks with 4 ft (1.22 m) aisles or multiple-row racks with high-temperature ceiling sprinklers and ordinary-temperature in-rack sprinklers
D	Single- or double-row racks with 4 ft (1.22 m) aisles or multiple-row racks with ordinary-temperature ceiling sprinklers and ordinary-temperature in-rack sprinklers
E	Single- or double-row racks with 8 ft (2.44 m) aisles and high-temperature ceiling sprinklers
F	Single- or double-row racks with 8 ft (2.44 m) aisles and ordinary-temperature ceiling sprinklers
G	Single- or double-row racks with 4 ft (1.22 m) aisles and high-temperature ceiling sprinklers
H	Single- or double-row racks with 4 ft (1.22 m) aisles and ordinary-temperature ceiling sprinklers
I	Multiple-row racks with 8 ft (2.44 m) or wider aisles and high-temperature ceiling sprinklers
J	Multiple-row racks with 8 ft (2.44 m) or wider aisles and ordinary-temperature ceiling sprinklers

FIGURE 16.2.1.3.2(c) Sprinkler System Design Curves — 20 ft (6.1 m) High Rack Storage — Class III Nonencapsulated Commodities — Conventional Pallets.

Copyright 2014 National Fire Protection Association (NFPA). Licensed, by agreement, for individual use and download on October 4, 2014 to LEADER and READER for designated user PATTARAPORN SRITRAKOOL. No other reproduction or transmission in any form permitted without written permission of NFPA. For inquires or to report unauthorized use, contact licensing@nfpa.org.

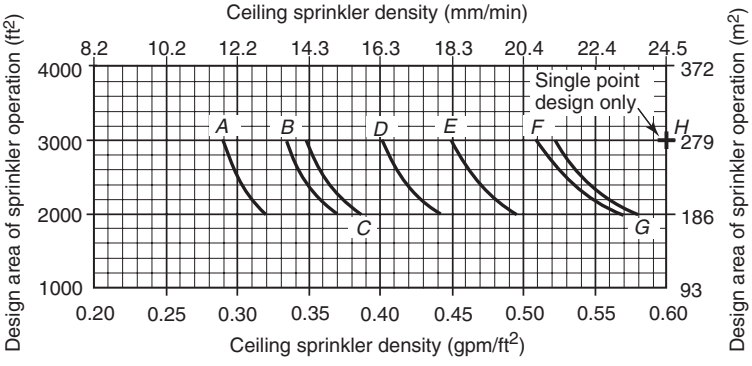

Note: Curves *C* and *D* also apply to ceiling sprinklers only for multiple-row rack storage up to and including 15 ft (4.57 m) high, and Figure 16.2.1.3.4.1 shall not be applied.

Curve	Legend
A	Single- or double-row racks with 8 ft (2.44 m) aisles with high-temperature ceiling sprinklers and ordinary-temperature in-rack sprinklers
B	Single- or double-row racks with 8 ft (2.44 m) aisles with ordinary-temperature ceiling sprinklers and ordinary-temperature in-rack sprinklers
C	Single- or double-row racks with 4 ft (1.22 m) aisles or multiple-row racks with high-temperature ceiling sprinklers and ordinary-temperature in-rack sprinklers
D	Single- or double-row racks with 4 ft (1.22 m) aisles or multiple-row racks with ordinary-temperature ceiling sprinklers and ordinary-temperature in-rack sprinklers
E	Single- or double-row racks with 8 ft (2.44 m) aisles and high-temperature ceiling sprinklers
F	Single- or double-row racks with 8 ft (2.44 m) aisles and ordinary-temperature ceiling sprinklers
G	Single- or double-row racks with 4 ft (1.22 m) aisles and high-temperature ceiling sprinklers
H	Single- or double-row racks with 4 ft (1.22 m) aisles and ordinary-temperature ceiling sprinklers

FIGURE 16.2.1.3.2(d) Sprinkler System Design Curves — 20 ft (6.1 m) High Rack Storage — Class IV Nonencapsulated Commodities — Conventional Pallets.

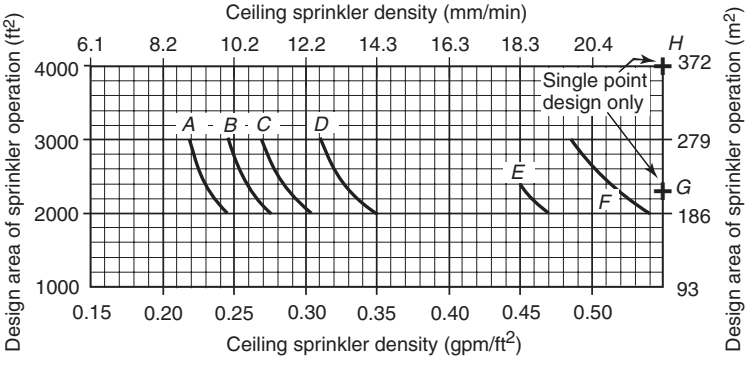

Curve	Legend
A	8 ft (2.44 m) aisles with high-temperature ceiling sprinklers and ordinary-temperature in-rack sprinklers
B	8 ft (2.44 m) aisles with ordinary-temperature ceiling sprinklers and ordinary-temperature in-rack sprinklers
C	4 ft (1.22 m) aisles with high-temperature ceiling sprinklers and ordinary-temperature in-rack sprinklers
D	4 ft (1.22 m) aisles with ordinary-temperature ceiling sprinklers and ordinary-temperature in-rack sprinklers
E	8 ft (2.44 m) aisles with high-temperature ceiling sprinklers
F	8 ft (2.44 m) aisles with ordinary-temperature ceiling sprinklers
G	4 ft (1.22 m) aisles with high-temperature ceiling sprinklers
H	4 ft (1.22 m) aisles with ordinary-temperature ceiling sprinklers

FIGURE 16.2.1.3.2(e) Single- or Double-Row Racks — 20 ft (6.1 m) High Rack Storage — Sprinkler System Design Curves — Class I and Class II Encapsulated Commodities — Conventional Pallets.

Copyright 2014 National Fire Protection Association (NFPA). Licensed, by agreement, for individual use and download on October 4, 2014 to LEADER and READER for designated user PATTARAPORN SRITRAKOOL. No other reproduction or transmission in any form permitted without written permission of NFPA. For inquires or to report unauthorized use, contact licensing@nfpa.org.

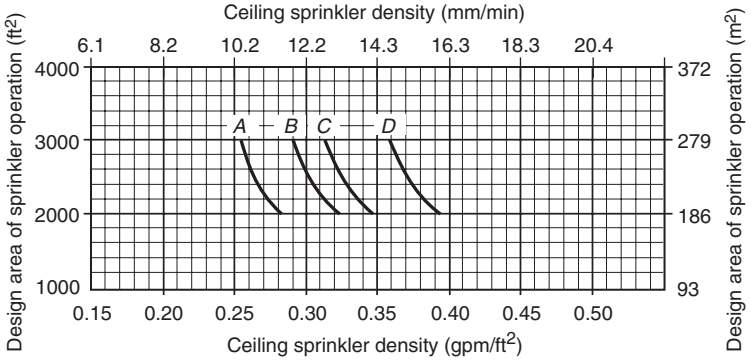

Curve	Legend
A	8 ft (2.44 m) aisles with high-temperature ceiling sprinklers and ordinary-temperature in-rack sprinklers
B	8 ft (2.44 m) aisles with ordinary-temperature ceiling sprinklers and ordinary-temperature in-rack sprinklers
C	4 ft (1.22 m) aisles with high-temperature ceiling sprinklers and ordinary-temperature in-rack sprinklers
D	4 ft (1.22 m) aisles with ordinary-temperature ceiling sprinklers and ordinary-temperature in-rack sprinklers

FIGURE 16.2.1.3.2(f) Single- or Double-Row Racks — 20 ft (6.1 m) High Rack Storage — Sprinkler System Design Curves — Class III Encapsulated Commodities — Conventional Pallets.

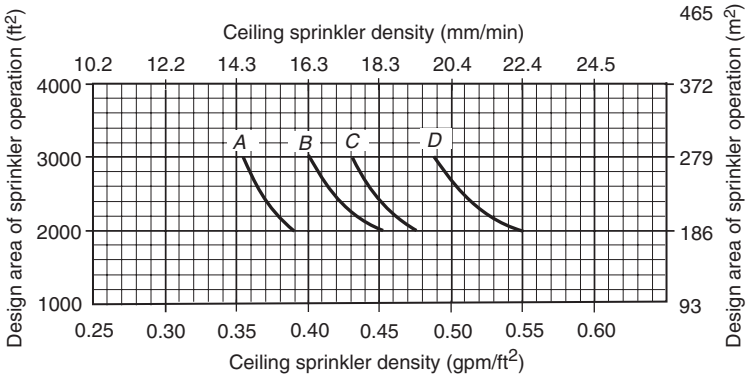

Curve	Legend
A	8 ft (2.44 m) aisles with high-temperature ceiling sprinklers and ordinary-temperature in-rack sprinklers
B	8 ft (2.44 m) aisles with ordinary-temperature ceiling sprinklers and ordinary-temperature in-rack sprinklers
C	4 ft (1.22 m) aisles with high-temperature ceiling sprinklers and ordinary-temperature in-rack sprinklers
D	4 ft (1.22 m) aisles with ordinary-temperature ceiling sprinklers and ordinary-temperature in-rack sprinklers

FIGURE 16.2.1.3.2(g) Single- or Double-Row Racks — 20 ft (6.1 m) High Rack Storage — Sprinkler System Design Curves — Class IV Encapsulated Commodities — Conventional Pallets.

16.2.1.3.2.1* Design densities for single- and double-row racks shall be selected to correspond to aisle width. *(See Section C.15.)*

(A) For aisle widths between 4 ft (1.2 m) and 8 ft (2.4 m), the rules for 4 ft (1.2 m) aisle width shall be used or direct linear interpolation between the densities shall be permitted.

(B) The density given for 8 ft (2.4 m) wide aisles shall be applied to aisles wider than 8 ft (2.4 m).

(C) The density given for 4 ft (1.2 m) wide aisles shall be applied to aisles more narrow than 4 ft (1.2 m) down to 3½ ft (1.07 m).

(D) Where aisles are more narrow than 3½ ft (1.07 m), racks shall be considered to be multiple-row racks.

16.2.1.3.3 Multiple-Row Racks — Storage Height Over 12 ft (3.7 m) Up to and Including 25 ft (7.6 m) Without Solid Shelves.

16.2.1.3.3.1 Multiple-Row Racks — Rack Depth Up to and Including 16 ft (4.9 m) with Aisles 8 ft (2.4 m) or Wider. For Class I, Class II, Class III, or Class IV commodities, encapsulated or nonencapsulated, ceiling sprinkler water demand in terms of density [gpm/ft^2 (mm/min)] and area of sprinkler operation [ft^2 (m^2) of ceiling or roof] shall be selected from the density/area curves of Figure 16.2.1.3.2(a) through Figure 16.2.1.3.2(g) that are appropriate for each commodity and configuration as shown in Table 16.2.1.3.3.1 and shall be modified as appropriate by 16.2.1.3.4. The protection criteria shall apply to portable racks arranged in the same manner as single- or double-row racks.

16.2.1.3.3.2 Multiple-Row Racks — Rack Depth Over 16 ft (4.9 m) or Aisles More Narrow Than 8 ft (2.4 m). For Class I, Class II, Class III, or Class IV commodities, encapsulated or nonencapsulated, ceiling sprinkler water demand in terms of density [gpm/ft^2 (mm/min)] and area of sprinkler operation [ft^2 (m^2) of ceiling or roof] shall be selected from the density/area curves of Figure 16.2.1.3.2(a) through Figure 16.2.1.3.2(g) that are appropriate for each commodity and configuration as shown in Table 16.2.1.3.3.2 and shall be modified as appropriate by 16.2.1.3.4. The protection criteria shall apply to portable racks arranged in the same manner as single-, double-, or multiple-row racks.

16.2.1.3.4 Ceiling Sprinkler Density Adjustments.

16.2.1.3.4.1 For storage height over 12 ft (3.7 m) up to and including 25 ft (7.6 m) protected with ceiling sprinklers only and for storage height over 12 ft (3.7 m) up to and including 20 ft (6.1 m) protected with ceiling sprinklers and minimum required in-rack sprinklers, densities obtained from design curves shall be adjusted in accordance with Figure 16.2.1.3.4.1.

16.2.1.3.4.2 For storage height over 20 ft (6.1 m) up to and including 25 ft (7.6 m) protected with ceiling sprinklers and

Copyright 2014 National Fire Protection Association (NFPA). Licensed, by agreement, for individual use and download on October 4, 2014 to LEADER and READER for designated user PATTARAPORN SRITRAKOOL. No other reproduction or transmission in any form permitted without written permission of NFPA. For inquires or to report unauthorized use, contact licensing@nfpa.org.

Table 16.2.1.3.3.1 Multiple-Row Racks — Rack Depth Up to and Including 16 ft (4.9 m), Aisles 8 ft (2.4 m) or Wider and Storage Height Over 12 ft (3.7 m) Up to 25 ft (7.6 m)

Height	Commodity Class	Encapsulated	Sprinklers Mandatory In-Rack	Ceiling Sprinkler Water Demand							
				With In-Rack Sprinklers				Without In-Rack Sprinklers			
				Figure	Curves	Apply Figure 16.2.1.3.4.1	1.25 × Density	Figure	Curves	Apply Figure 16.2.1.3.4.1	1.25 × Density
Over 12 ft (3.7 m) up to and including 15 ft (4.6 m)	I	No	No	16.2.1.3.2(a)	C and D	Yes	No	16.2.1.3.2(a)	I and J	Yes	No
		Yes		16.2.1.3.2(a)			Yes	16.2.1.3.2(a)	I and J		Yes
	II	No		16.2.1.3.2(b)			No	16.2.1.3.2(b)	I and J	Yes	No
		Yes		16.2.1.3.2(b)			Yes	16.2.1.3.2(b)	I and J		Yes
	III	No	No	16.2.1.3.2(c)			No	16.2.1.3.2(c)	I and J	Yes	No
		Yes	1 level	16.2.1.3.2(c)			Yes		NA	NA	NA
	IV	No	No	16.2.1.3.2(d)			No	16.2.1.3.2(d)	C and D	No	No
		Yes	1 level	16.2.1.3.2(d)	A and B		1.50 × density		NA	NA	NA
Over 15 ft (4.6 m) up to and including 20 ft (6.1 m)	I	No	No	16.2.1.3.2(a)	C and D	Yes	No	16.2.1.3.2(a)	I and J	Yes	No
		Yes		16.2.1.3.2(a)			Yes	16.2.1.3.2(a)	I and J		Yes
	II	No		16.2.1.3.2(b)			No	16.2.1.3.2(b)	I and J	Yes	No
		Yes		16.2.1.3.2(b)			Yes	16.2.1.3.2(b)	I and J		Yes
	III	No	No	16.2.1.3.2(c)			No	16.2.1.3.2(c)	I and J	Yes	No
		Yes	1 level	16.2.1.3.2(c)			Yes	NA	NA	NA	NA
	IV	No	1 level	16.2.1.3.2(d)			No				
		Yes		16.2.1.3.2(d)	A nd B		1.50 × density				
Over 20 ft (6.1 m) up to and including 25 ft (7.6 m)	I	No	No	16.2.1.3.2(a)	C and D	No	No	16.2.1.3.2(a)	I and J	Yes	No
		Yes	1 level	16.2.1.3.2(a)			Yes	NA	NA	NA	NA
	II	No	1 level	16.2.1.3.2(b)			No				
		Yes		16.2.1.3.2(b)			Yes				
	III	No		16.2.1.3.2(c)			No				
		Yes		16.2.1.3.2(c)			Yes				
	IV	No	2 levels	16.2.1.3.2(d)			No				
		Yes		16.2.1.3.2(d)	A and B		1.50 × density				

NA: Not applicable.

minimum required in-rack sprinklers, densities obtained from design curves shall be used. Densities shall not be adjusted in accordance with Figure 16.2.1.3.4.1.

16.2.1.3.4.3 For storage height over 12 ft (3.7 m) up to and including 20 ft (6.1 m) protected with ceiling sprinklers and with more than one level of in-rack sprinklers, but not in every tier, densities obtained from design curves and adjusted in accordance with Figure 16.2.1.3.4.1 shall be permitted to be reduced an additional 20 percent, as indicated in Table 16.2.1.3.4.3.

16.2.1.3.4.4 For storage height over 20 ft (6.1 m) up to and including 25 ft (7.6 m) protected with ceiling sprinklers and with more than the minimum required level of in-rack sprinklers, but not in every tier, densities obtained from design curves shall be permitted to be reduced 20 percent, as indicated in Table 16.2.1.3.4.3. Densities shall not be adjusted in accordance with Figure 16.2.1.3.4.1 for storage height.

16.2.1.3.4.5 For storage height over 12 ft (3.7 m) up to and including 20 ft (6.1 m) protected with ceiling sprinklers and in-rack sprinklers at each tier, densities obtained from design curves and adjusted in accordance with Figure 16.2.1.3.4.1 shall be permitted to be reduced an additional 40 percent, as indicated in Table 16.2.1.3.4.3.

16.2.1.3.4.6 For storage height over 20 ft (6.1 m) up to and including 25 ft (7.6 m) protected with ceiling sprinklers and in-rack sprinklers at each tier, densities obtained from design curves shall be permitted to be reduced 40 percent, as indicated in Table 16.2.1.3.4.3. Densities shall not be adjusted in accordance with Figure 16.2.1.3.4.1 for storage height.

Copyright 2014 National Fire Protection Association (NFPA). Licensed, by agreement, for individual use and download on October 4, 2014 to LEADER and READER for designated user PATTARAPORN SRITRAKOOL. No other reproduction or transmission in any form permitted without written permission of NFPA. For inquires or to report unauthorized use, contact licensing@nfpa.org.

Table 16.2.1.3.3.2 Multiple-Row Racks — Rack Depth Over 16 ft (4.9 m) or Aisles Narrower Than 8 ft (2.4 m), Storage Height Over 12 ft (3.7 m) Up to and Including 25 ft (7.6 m)

Height	Commodity Class	Encapsulated	Sprinklers Mandatory In-Rack	Ceiling Sprinkler Water Demand							
				With In-Rack Sprinklers				Without In-Rack Sprinklers			
				Figure	Curves	Apply Figure 16.2.1.3.4.1	1.25 × Density	Figure	Curves	Apply Figure 16.2.1.3.4.1	1.25 × Density
Over 12 ft (3.7 m) up to and including 15 ft (4.6 m)	I	No	No	16.2.1.3.2(a)	C and D	Yes	No	16.2.1.3.2(a)	I and J	Yes	No
		Yes		16.2.1.3.2(a)			Yes	16.2.1.3.2(a)	I and J		Yes
	II	No		16.2.1.3.2(b)			No	16.2.1.3.2(b)	I and J	Yes	No
		Yes		16.2.1.3.2(b)			Yes	16.2.1.3.2(b)	I and J		Yes
	III	No		16.2.1.3.2(c)			No	16.2.1.3.2(c)	I and J	Yes	No
		Yes	1 level	16.2.1.3.2(c)			Yes				
	IV	No	No	16.2.1.3.2(d)			No	16.2.1.3.2(d)	C and D	No	No
		Yes	1 level	16.2.1.3.2(d)			1.50 × density				
Over 15 ft (4.6 m) up to and including 20 ft (6.1 m)	I	No	1 level	16.2.1.3.2(a)	C and D	Yes	No	NA	NA	NA	NA
		Yes		16.2.1.3.2(a)			Yes				
	II	No		16.2.1.3.2(b)			No				
		Yes		16.2.1.3.2(b)			Yes				
	III	No		16.2.1.3.2(c)			No				
		Yes		16.2.1.3.2(c)			Yes				
	IV	No		16.2.1.3.2(d)			No				
		Yes		16.2.1.3.2(d)			1.50 × density				
Over 20 ft (6.1 m) up to and including 25 ft (7.6 m)	I	No	1 level	16.2.1.3.2(a)	C and D	No	No	NA	NA	NA	NA
		Yes		16.2.1.3.2(a)			Yes				
	II	No		16.2.1.3.2(b)			No				
		Yes		16.2.1.3.2(b)			Yes				
	III	No		16.2.1.3.2(c)			No				
		Yes		16.2.1.3.2(c)			Yes				
	IV	No	2 levels	16.2.1.3.2(d)			No				
		Yes		16.2.1.3.2(d)			1.50 × density				

NA: Not applicable.

16.2.1.3.4.7 Where solid, flat-bottom, combustible pallets (slave pallets) are used with storage height up to and including 25 ft (7.6 m), the densities that are indicated in the design curves shown in Figure 16.2.1.3.2(a) through Figure 16.2.1.3.2(g), based on conventional pallets, shall be increased 20 percent for the given area.

(A) The percentage shall be applied to the density determined in accordance with Figure 16.2.1.3.4.1.

(B) The increase in density shall not apply where in-rack sprinklers are installed in accordance with Table 16.2.1.3.4.3.

16.2.1.3.5 For solid shelf rack storage, Table 16.2.1.3.2 shall be used to establish the density/area criteria and in-rack sprinklers shall be installed in accordance with 16.1.6.

16.2.1.4 In-Rack Sprinklers for Rack Storage of Class I Through Class IV Commodities Stored Up to and Including 25 ft (7.6 m) in Height Protected with Control Mode Density/Area Sprinklers at Ceiling.

16.2.1.4.1 In-Rack Sprinkler Location for Rack Storage of Class I Through Class IV Commodities Stored Up to and Including 25 ft (7.6 m) in Height.

16.2.1.4.1.1 In single- or double-row racks without solid shelves, in-rack sprinklers shall be installed in accordance with Table 16.2.1.3.2.

16.2.1.4.1.2 In multiple-row racks no deeper than 16 ft (4.9 m) with aisles 8 ft (2.4 m) or more in width, in-rack sprinklers shall be installed in accordance with Table 16.2.1.3.3.1.

Copyright 2014 National Fire Protection Association (NFPA). Licensed, by agreement, for individual use and download on October 4, 2014 to LEADER and READER for designated user PATTARAPORN SRITRAKOOL. No other reproduction or transmission in any form permitted without written permission of NFPA. For inquires or to report unauthorized use, contact licensing@nfpa.org.

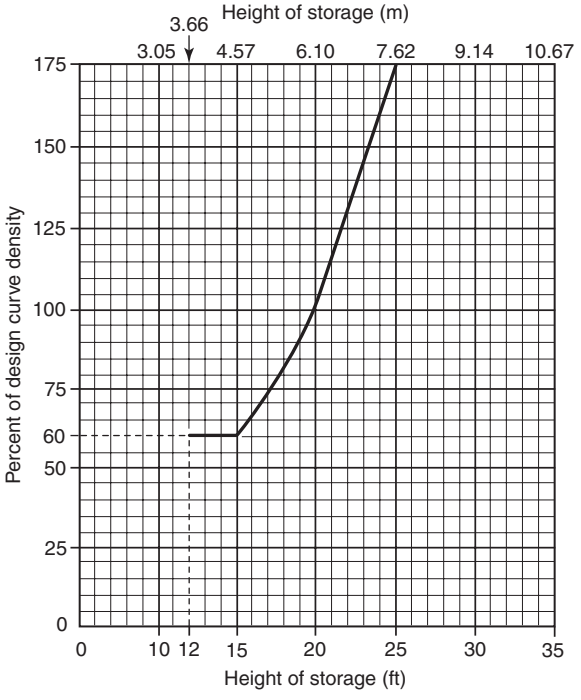

FIGURE 16.2.1.3.4.1 Ceiling Sprinkler Density vs. Storage Height.

16.2.1.4.1.3 In multiple-row racks deeper than 16 ft (4.9 m) or with aisles less than 8 ft (2.4 m) wide, in-rack sprinklers shall be installed in accordance with Table 16.2.1.3.3.2.

16.2.1.4.1.4 In-rack sprinklers at one level only for storage up to and including 25 ft (7.6 m) high shall be located at the first tier level at or above one-half of the storage height.

16.2.1.4.1.5 In-rack sprinklers at two levels only for storage up to and including 25 ft (7.6 m) high shall be located at the first tier level at or above one-third and two-thirds of the storage height.

16.2.1.4.2 In-Rack Sprinkler Spacing for Rack Storage of Class I Through Class IV Commodities Stored Up to and Including 25 ft (7.6 m) in Height Protected by Control Mode Density/Area Sprinklers at the Ceiling.

16.2.1.4.2.1* Maximum horizontal spacing of in-rack sprinklers in single- or double-row racks up to and including 25 ft (7.6 m) in height shall be in accordance with Table 16.2.1.4.2.1.

16.2.1.4.2.2* Maximum horizontal spacing and maximum area of coverage of in-rack sprinklers on branch lines, in multiple-row racks with storage up to and including 25 ft (7.6 m) in height, shall be in accordance with Table 16.2.1.4.2.2.

(A) The rack plan view shall be considered in determining the area covered by each sprinkler.

(B) The aisles shall not be included in area calculations.

16.2.1.4.2.3* In-rack sprinklers shall be located at an intersection of transverse and longitudinal flues while not exceeding the maximum spacing rules.

(A) Where distances between transverse flues exceed the maximum allowable distances, sprinklers shall be installed at the intersection of the transverse and longitudinal flues and additional sprinklers shall be installed between transverse flues to meet the maximum distance rules.

(B) Where no transverse flues exist, in-rack sprinklers shall not exceed the maximum spacing rules.

16.2.1.4.2.4* The elevation of in-rack sprinkler deflectors with respect to storage shall not be a consideration in single- or double-row rack storage up to and including 20 ft (6.1 m) high. *(See Section C.16.)*

Table 16.2.1.3.4.3 Adjustment to Ceiling Sprinkler Density for Storage Height and In-Rack Sprinklers

Storage Height	In-Rack Sprinklers	Apply Figure 16.2.1.3.4.1 for Storage Height Adjustment	Permitted Ceiling Sprinklers Density Adjustments Where In-Rack Sprinklers Are Installed
Over 12 ft (3.7 m) through 25 ft (7.6 m)	None	Yes	None
Over 12 ft (3.7 m) through 20 ft (6.1 m)	Minimum required	Yes	None
	More than minimum, but not in every tier	Yes	Reduce density 20% from that of minimum in-rack sprinklers
	In every tier	Yes	Reduce density 40% from that of minimum in-rack sprinklers
Over 20 ft (6.1 m) through 24 ft (7.5 m)	Minimum required	No	None
	More than minimum, but not in every tier	No	Reduce density 20% from that of minimum in-rack sprinklers
	In every tier	No	Reduce density 40% from that of minimum in-rack sprinklers

Copyright 2014 National Fire Protection Association (NFPA). Licensed, by agreement, for individual use and download on October 4, 2014 to LEADER and READER for designated user PATTARAPORN SRITRAKOOL. No other reproduction or transmission in any form permitted without written permission of NFPA. For inquires or to report unauthorized use, contact licensing@nfpa.org.

Table 16.2.1.4.2.1 In-Rack Sprinkler Spacing for Class I, II, III, and IV Commodities Stored in Single- or Double-Row Racks Up to 25 ft (7.6 m) in Height Protected by Control Mode Density/Area Sprinklers at the Ceiling

			Commodity Class					
	Aisle Widths		I and II		III		IV	
Encapsulated	ft	m	ft	m	ft	m	ft	m
No	8	2.4	12	3.7	12	3.7	10	3.0
No	4	1.2	12	3.7	10	3.0	10	3.0
Yes	—	—	8	2.4	8	2.4	8	2.4

Table 16.2.1.4.2.2 In-Rack Sprinkler Spacing for Class I, II, III, and IV Commodities Stored in Multi-Row Racks Up to 25 ft (7.6 m) in Height Protected by Control Mode Density/Area Sprinklers at the Ceiling

Commodity Class							
I, II, III				IV			
Spacing		Area		Spacing		Area	
ft	m	ft^2	m^2	ft	m	ft^2	m^2
12	3.7	100	9.3	8	2.4	80	7.4

16.2.1.4.2.5* In single- or double-row racks without solid shelves with storage over 20 ft (6.1 m) high, or in multiple-row racks, or in single- or double-row racks with solid shelves and storage height up to and including 25 ft (7.6 m), a minimum of 6 in. (152 mm) vertical clear space shall be maintained between the in-rack sprinkler deflectors and the top of a tier of storage.

(A) Sprinkler discharge shall not be obstructed by horizontal rack members.

16.2.1.4.2.6 For multiple-row racks, a minimum of 6 in. (152 mm) shall be maintained between the in-rack sprinkler deflector and the top of a tier of storage.

16.2.1.4.2.7 Sprinklers installed in racks shall be spaced without regard to rack uprights. *(See Section C.17.)*

16.2.1.4.3 In-Rack Sprinkler Water Demand for Rack Storage of Class I Through Class IV Commodities Stored Up to and Including 25 ft (7.6 m) in Height Protected by Control Mode Density/Area Sprinklers in the Ceiling. See Section C.18.

16.2.1.4.3.1 The water demand for sprinklers installed in racks shall be based on simultaneous operation of the most hydraulically remote sprinklers as follows:

(1) Six sprinklers where only one level is installed in racks with Class I, Class II, or Class III commodities
(2) Eight sprinklers where only one level is installed in racks with Class IV commodities
(3) Ten sprinklers (five on each two top levels) where more than one level is installed in racks with Class I, Class II, or Class III commodities
(4) Fourteen sprinklers (seven on each two top levels) where more than one level is installed in racks with Class IV commodities

16.2.1.4.3.2 Where a storage rack, due to its length, requires less than the number of in-rack sprinklers specified in 16.2.1.4.3.1(1) through 16.2.1.4.3.1(4), only those in-rack sprinklers in a single rack shall be included in the calculation.

16.2.1.4.4 In-Rack Sprinkler Discharge Pressure for Rack Storage of Class I Through Class IV Commodities Stored Up to and Including 25 ft (7.6 m) in Height Protected by Control Mode Density/Area Sprinklers at the Ceiling. Sprinklers in racks shall discharge at not less than 15 psi (1 bar) for all classes of commodities. *(See Section C.19.)*

16.2.2 CMSA Sprinklers for Rack Storage of Class I Through Class IV Commodities Stored Up to and Including 25 ft (7.6 m) in Height.

16.2.2.1 Protection of single-, double-, and multiple-row rack storage without solid shelves for Class I through Class IV commodities shall be in accordance with Table 16.2.2.1.

16.2.2.2 Where in-rack sprinklers are required by Table 16.2.2.1, in-rack sprinkler spacing, design pressure, and hydraulic calculation criteria shall be in accordance with the requirements of 16.2.2.7 as applicable for the commodity.

16.2.2.3 Protection shall be provided as specified in Table 16.2.2.1 or appropriate NFPA standards in terms of minimum operating pressure and the number of sprinklers to be included in the design area.

16.2.2.4 Open Wood Joist Construction.

16.2.2.4.1 Where CMSA sprinklers are installed under open wood joist construction, their minimum operating pressure shall be 50 psi (3.4 bar) for a K-11.2 (160) sprinkler or 22 psi (1.5 bar) for a K-16.8 (240) sprinkler.

16.2.2.4.2 Where each joist channel of open wood joist construction is fully firestopped to its full depth at intervals not exceeding 20 ft (6.1 m), the lower pressures specified in Table 16.2.2.1 shall be permitted to be used.

16.2.2.5 Preaction Systems. For the purpose of using Table 16.2.2.1, preaction systems shall be classified as dry pipe systems.

16.2.2.6 Building steel shall not require special protection where Table 16.2.2.1 is applied as appropriate for the storage configuration.

16.2.2.7 In-Rack Sprinklers for Rack Storage of Class I Through Class IV Commodities Stored Up to and Including 25 ft (7.6 m) in Height Protected with Control Mode Specific Application Sprinklers at the Ceiling.

16.2.2.7.1 Where in-rack sprinklers are required by Table 16.2.2.1, in-rack sprinklers shall be installed at the first tier level at or above one-half of the storage height.

Copyright 2014 National Fire Protection Association (NFPA). Licensed, by agreement, for individual use and download on October 4, 2014 to LEADER and READER for designated user PATTARAPORN SRITRAKOOL. No other reproduction or transmission in any form permitted without written permission of NFPA. For inquires or to report unauthorized use, contact licensing@nfpa.org.

Table 16.2.2.1 CMSA Sprinkler Design Criteria for Rack Storage of Class I Through Class IV Commodities (Encapsulated and Nonencapsulated) Stored Up to and Including 25 ft (7.6 m) in Height

Storage Arrangement	Commodity Class	Maximum Storage Height		Maximum Ceiling/Roof Height		K-Factor/ Orientation	Type of System	Number of Design Sprinklers	Minimum Operating Pressure	
		ft	m	ft	m				psi	bar
Single-, double-, and multiple-row racks without solid shelves (no open-top containers)	Class I or II	20	6.1	30	9.1	11.2 (160) Upright	Wet	15	25	1.7
							Dry	25	25	1.7
						16.8 (240) Upright	Wet	15	10	0.7
							Dry	25	15	1.0
						19.6 (280) Pendent	Wet	15	16	1.1
		25	7.6	30	9.1	11.2 (160) Upright	Wet	20	25	1.7
							Dry	30	25	1.7
						16.8 (240) Upright	Wet	15	10	0.7
							Dry	30	15	1.0
						19.6 (280) Pendent	Wet	15	16	1.1
	Class III	20	6.1	30	9.1	11.2 (160) Upright	Wet	15	25	1.7
							Dry	25	25	1.7
						16.8 (240) Upright	Wet	15	15	1.0
							Dry	25	15	1.0
						19.6 (280) Pendent	Wet	15	16	1.1
		25	7.6	30	9.1	11.2 (160) Upright	Wet	15 + 1 level of in-rack	25	1.7
							Dry	25 + 1 level of in-rack	25	1.7
						16.8 (240) Upright	Wet	15	22	1.5
							Dry	25 + 1 level of in-rack	15	1.0
						19.6 (280) Pendent	Wet	15	16	1.1
				35	10.6	11.2 (160) Upright	Wet	15 + 1 level of in-rack	25	1.7
							Dry	25 + 1 level of in-rack	25	1.7
						16.8 (240) Upright	Wet	15 + 1 level of in-rack	15	1.0
							Dry	25 + 1 level of in-rack	15	1.0
						19.6 (280) Pendent	Wet	15	25	1.7
				40	12.1	19.6 (280) Pendent	Wet	15	30	2.1

(continues)

Copyright 2014 National Fire Protection Association (NFPA). Licensed, by agreement, for individual use and download on October 4, 2014 to LEADER and READER for designated user PATTARAPORN SRITRAKOOL. No other reproduction or transmission in any form permitted without written permission of NFPA. For inquires or to report unauthorized use, contact licensing@nfpa.org.

Table 16.2.2.1 *Continued*

Storage Arrangement	Commodity Class	Maximum Storage Height		Maximum Ceiling/Roof Height		K-Factor/ Orientation	Type of System	Number of Design Sprinklers	Minimum Operating Pressure	
		ft	m	ft	m				psi	bar
	Class IV	20	6.1	25	7.6	11.2 (160) Upright	Wet	15	50	3.5
						16.8 (240) Upright	Wet	15	22	1.5
						19.6 (280) Pendent	Wet	15	16	1.1
				30	9.1	11.2 (160) Upright	Wet	20	50	3.5
								15	75	5.2
						16.8 (240) Upright	Wet	15	22	1.5
						19.6 (280) Pendent	Wet	15	16	1.1
		25	7.6	30	9.1	11.2 (160) Upright	Wet	15 + 1 level of in-rack	50	3.5
						16.8 (240) Upright	Wet	15	22	1.5
						19.6 (280) Pendent	Wet	15	16	1.1
				35	10.6	11.2 (160) Upright	Wet	20 + 1 level of in-rack	50	3.5
								15 + 1 level of in-rack	75	5.2
						16.8 (240) Upright	Wet	20 + 1 level of in-rack	22	1.5
								15 + 1 level of in-rack	35	2.4
						19.6 (280) Pendent	Wet	15	25	1.7
				40	12.1	19.6 (280) Pendent	Wet	15	30	2.1

16.2.2.7.2 The minimun of 6 in. (152.4 mm) vertical clear space shall be maintained between the sprinkler deflectors and the top of a tier of storage.

16.2.2.7.3* In-rack sprinklers shall be located at an intersection of transverse and longitudinal flues.

16.2.2.7.4 The maximum horizontal distance between in-rack sprinklers shall be 8 ft (1.5 m).

16.2.2.7.5 Where distances between transverse flues exceed the maximum allowable distances, sprinklers shall be installed at the intersection of the transverse and longitudinal flues, and additional sprinklers shall be installed between transverse flues to meet the maximum distance rules.

16.2.2.7.6 Where no transverse flues exist, in-rack sprinklers shall not exceed the maximum spacing rules.

16.2.2.7.7 In-Rack Sprinkler Water Demand. The water demand for in-rack sprinklers shall be based on simultaneous operation of the most hydraulically remote eight sprinklers.

16.2.2.7.8 In-Rack Sprinkler Discharge Pressure. In-rack sprinklers shall discharge at not less than 15 psi (1 bar) for all classes of commodities. *(See Section C.19.)*

16.2.3* Early Suppression Fast-Response (ESFR) Sprinklers for Rack Storage of Class I Through Class IV Commodities Stored Up to and Including 25 ft (7.6 m) in Height.

16.2.3.1 Protection of single-, double-, and multiple-row rack storage of Class I through Class IV commodities shall be in accordance with Table 16.2.3.1.

16.2.3.2 ESFR sprinklers shall not be permitted to protect storage on solid shelf racks unless the solid shelf racks are protected with in-rack sprinklers in accordance with 16.1.6.

16.2.3.3 ESFR sprinklers shall not be permitted to protect storage with open top containers.

16.2.3.4 ESFR sprinkler systems shall be designed such that the minimum operating pressure is not less than that indicated in Table 16.2.3.1 for type of storage, commodity, storage height, and building height involved.

16.2.3.5 The design area shall consist of the most hydraulically demanding area of 12 sprinklers, consisting of four sprinklers on each of three branch lines.

Copyright 2014 National Fire Protection Association (NFPA). Licensed, by agreement, for individual use and download on October 4, 2014 to LEADER and READER for designated user PATTARAPORN SRITRAKOOL. No other reproduction or transmission in any form permitted without written permission of NFPA. For inquires or to report unauthorized use, contact licensing@nfpa.org.

Table 16.2.3.1 ESFR Sprinkler Protection of Rack Storage Without Solid Shelves of Class I Through Class IV Commodities Stored Up to and Including 25 ft (7.6 m) in Height

Storage Arrangement	Commodity	Maximum Storage Height		Maximum Ceiling/Roof Height		Nominal K-Factor	Orientation	Minimum Operating Pressure		In-Rack Sprinkler Requirements
		ft	m	ft	m			psi	bar	
Single-row, double-row, and multiple-row racks (no open-top containers)	Class I, II, III, or IV, encapsulated or unencapsulated	20	6.1	25	7.6	14.0 (200)	Upright/ pendent	50	3.4	No
						16.8 (240)	Upright/ pendent	35	2.4	No
						22.4 (320)	pendent	25	1.7	No
						25.2 (360)	Pendent	15	1.0	No
				30	9.1	14.0 (200)	Upright/ pendent	50	3.4	No
						16.8 (240)	Upright/ pendent	35	2.4	No
						22.4 (320)	Pendent	25	1.7	No
						25.2 (360)	Pendent	15	1.0	No
				35	10.7	14.0 (200)	Upright/ pendent	75	5.2	No
						16.8 (240)	Upright/ pendent	52	3.6	No
						22.4 (320)	Pendent	35	2.4	No
						25.2 (360)	Pendent	20	1.4	No
				40	12.2 or 12.1	16.8 (240)	Pendent	52	3.6	No
						22.4 (320)	Pendent	40	2.8	No
						25.2 (360)	Pendent	25	1.7	No
				45	13.7	14.0 (200)	Pendent	90	6.2	Yes
						16.8 (240)	Pendent	63	4.4	Yes
						22.4 (320)	Pendent	40	2.8	No
						25.2 (360)	Pendent	40	2.8	No
		25	7.6	30	9.1	14.0 (200)	Upright/ pendent	50	3.4	No
						16.8 (240)	Upright/ pendent	35	2.4	No
						22.4 (320)	Pendent	25	1.7	No
						25.2 (360)	Pendent	15	1.0	No
				32	9.8	14.0 (200)	Upright/ pendent	60	4.1	No
						16.8 (240)	Upright/ pendent	42	2.9	No

(continues)

Copyright 2014 National Fire Protection Association (NFPA). Licensed, by agreement, for individual use and download on October 4, 2014 to LEADER and READER for designated user PATTARAPORN SRITRAKOOL. No other reproduction or transmission in any form permitted without written permission of NFPA. For inquires or to report unauthorized use, contact licensing@nfpa.org.

Table 16.2.3.1 *Continued*

Storage Arrangement	Commodity	Maximum Storage Height		Maximum Ceiling/Roof Height		Nominal K-Factor	Orientation	Minimum Operating Pressure		In-Rack Sprinkler Requirements
		ft	m	ft	m			psi	bar	
				35	10.7	14.0 (200)	Upright/ pendent	75	5.2	No
						16.8 (240)	Upright/ pendent	52	3.6	No
						22.4 (320)	Pendent	35	2.4	No
						25.2 (360)	Pendent	20	1.4	No
				40	12.2 or 12.1	16.8 (240)	Pendent	52	3.6	No
						22.4 (320)	Pendent	40	2.8	No
						25.2 (360)	Pendent	25	1.7	No
				45	13.7	14.0 (200)	Pendent	90	6.2	Yes
						16.8 (240)	Pendent	63	4.4	Yes
						22.4 (320)	Pendent	40	2.8	No
						25.2 (360)	Pendent	40	2.8	No

16.2.3.6 In-Rack Sprinkler Requirements for Rack Storage of Class I Through Class IV Commodities Stored Up to and Including 25 ft (7.6 m) in Height Where ESFR Sprinklers Are Being Used at the Ceiling.

16.2.3.6.1 Where required by Table 16.2.3.1, in-rack sprinklers shall be installed at the first tier level at or above one-half of the storage height.

16.2.3.6.2 In-rack sprinklers shall be K-8.0 (115) or K-11.2 (160) quick-response, ordinary-temperature sprinklers.

16.2.3.6.3 The minimum of 6 in. (152.4 mm) vertical clear space shall be maintained between the sprinkler deflectors and the top of a tier of storage.

16.2.3.6.4 The maximum horizontal distance between in-rack sprinklers shall be 5 ft (1.5 m).

16.2.3.6.5* In-rack sprinklers shall be located at an intersection of transverse and longitudinal flues while not exceeding the maximum spacing rules.

16.2.3.6.6 Where distances between transverse flues exceed the maximum allowable distances, sprinklers shall be installed at the intersection of the transverse and longitudinal flues, and additional sprinklers shall be installed between transverse flues to meet the maximum distance rules.

16.2.3.6.7 Where no transverse flues exist, in-rack sprinklers shall not exceed the maximum spacing rules.

16.2.3.6.8 The water demand for sprinklers installed in racks shall be based on simultaneous operation of the most hydraulically remote eight sprinklers.

16.2.3.6.9 Each of the in-rack sprinklers described in 16.2.3.6.8 shall discharge at a minimum of 60 gpm (227 L/min).

16.2.4 Special Design for Rack Storage of Class I Through Class IV Commodities Stored Up to and Including 25 ft (7.6 m) in Height.

16.2.4.1 Slatted Shelves.

16.2.4.1.1* Slatted rack shelves shall be considered equivalent to solid rack shelves where the shelving is not considered open rack shelving or where the requirements of 16.2.4.1.2 are not met. *(See Section C.20.)*

16.2.4.1.2 A wet pipe system that is designed to provide a minimum of 0.6 gpm/ft^2 (24.5 mm/min) density over a minimum area of 2000 ft^2 (186 m^2) or K-14.0 (200) ESFR sprinklers operating at a minimum of 50 psi (3.4 bar), K-16.8 (240) sprinklers operating at a minimum of 32 psi (2.2 bar), K-22.4 (320) ESFR sprinklers operating at a minimum of 25 psi (1.7 bar), or K-25.2 (360) ESFR sprinklers operating at a minimum of 15 psi (1 bar) shall be permitted to protect single-row and double-row racks with slatted rack shelving where all of the following conditions are met:

(1) Sprinklers shall be K-11.2 (160), K-14.0 (200), or K-16.8 (240) orifice spray sprinklers with a temperature rating of ordinary, intermediate, or high and shall be listed for storage occupancies or shall be K-14.0 (200), K-16.8 (240), K-22.4 (320) ESFR, or K-25.2 (360) ESFR.
(2) The protected commodities shall be limited to Class I through Class IV, Group B plastics, Group C plastics, cartoned (expanded and unexpanded) Group A plastics, and exposed (unexpanded) Group A plastics.
(3) Slats in slatted rack shelving shall be a minimum nominal 2 in. (51 mm) thick by maximum nominal 6 in. (152 mm) wide, with the slats held in place by spacers that maintain a minimum 2 in. (51 mm) opening between each slat.

Copyright 2014 National Fire Protection Association (NFPA). Licensed, by agreement, for individual use and download on October 4, 2014 to LEADER and READER for designated user PATTARAPORN SRITRAKOOL. No other reproduction or transmission in any form permitted without written permission of NFPA. For inquires or to report unauthorized use, contact licensing@nfpa.org.

(4) Where K-11.2 (160), K-14.0 (200), or K-16.8 (240) orifice sprinklers are used, there shall be no slatted shelf levels in the rack above 12 ft (3.7 m). Open rack shelving using wire mesh shall be permitted for shelf levels above 12 ft (3.7 m).
(5) Transverse flue spaces at least 3 in. (76 mm) wide shall be provided at least every 10 ft (3.1 m) horizontally.
(6) Longitudinal flue spaces at least 6 in. (152 mm) wide shall be provided for double-row racks. Longitudinal flue spaces shall not be required where ESFR sprinklers are used.
(7) The aisle widths shall be at least 7½ ft (2.3 m).
(8) The maximum roof height shall be 27 ft (8.2 m) or 30 ft (9.1 m) where ESFR sprinklers are used.
(9) The maximum storage height shall be 20 ft (6.1 m).
(10) Solid plywood or similar materials shall not be placed on the slatted shelves so that they block the 2 in. (51 mm) spaces between slats, nor shall they be placed on wire mesh shelves.

16.3 Protection Criteria for Rack Storage of Class I Through Class IV Commodities Stored Over 25 ft (7.6 m) in Height.

16.3.1 Control Mode Density/Area Sprinkler Protection Criteria for Rack Storage of Class I Through Class IV Commodities Stored Over 25 ft (7.6 m) in Height.

16.3.1.1* For single- and double-row racks, the water demand for nonencapsulated storage without solid shelves separated by aisles at least 4 ft (1.2 m) wide and with not more than 10 ft (3.1 m) between the top of storage and the sprinklers shall be in accordance with Table 16.3.1.1.

16.3.1.1.1 Where storage as described in 16.3.1.1 is encapsulated, ceiling sprinkler density shall be 25 percent greater than for nonencapsulated storage.

16.3.1.2 For multiple-row racks, the water demand for nonencapsulated storage without solid shelves separated by aisles at least 4 ft (1.2 m) wide and with not more than 10 ft (3.1 m) between the top of storage and the sprinklers shall be in accordance with Table 16.3.1.2.

16.3.1.2.1 Where such storage is encapsulated, ceiling sprinkler density shall be 25 percent greater than for nonencapsulated storage.

16.3.1.3 In-Rack Sprinklers for Rack Storage of Class I Through Class IV Commodities Stored Over 25 ft (7.6 m) in Height Protected with Control Mode Density/Area Sprinklers at Ceiling.

16.3.1.3.1 In-Rack Sprinkler Location for Rack Storage of Class I Through Class IV Commodities Stored Over 25 ft (7.6 m) in Height Protected with Control Mode Density/Area Sprinklers at Ceiling.

16.3.1.3.1.1* Double-Row Racks.

(A) In double-row racks without solid shelves and with a maximum of 10 ft (3.1 m) between the top of storage and the ceiling, in-rack sprinklers shall be installed in accordance with Table 16.3.1.1 and Figure 16.3.1.3.1.1(A)(a) through Figure 16.3.1.3.1.1(A)(j). The highest level of in-rack sprinklers shall be not more than 10 ft (3.1 m) below the top of storage. Where a single-row rack is mixed with double-row racks, Table 16.3.1.1 and Figure 16.3.1.3.1.1(A)(a) through Figure 16.3.1.3.1.1(A)(j) shall be used.

(B) Figure 16.3.1.3.1.2(A)(a) through Figure 16.3.1.3.1.2(A)(c) shall be permitted to be used for the protection of the single-row racks.

16.3.1.3.1.2* Single-Row Racks.

(A) In single-row racks without solid shelves with storage height over 25 ft (7.6 m) and a maximum of 10 ft (3.1 m) between the top of storage and the ceiling, sprinklers shall be installed in accordance with Figure 16.3.1.3.1.2(A)(a) through Figure 16.3.1.3.1.2(A)(e).

(B) In single-row racks, where figures show in-rack sprinklers in transverse flue spaces centered between the rack faces, it shall be permitted to position these in-rack sprinklers in the transverse flue at any point between the load faces.

16.3.1.3.1.3* In-Rack Sprinkler Location — Multiple-Row Racks for Rack Storage of Class I Through Class IV Commodities Stored Over 25 ft (7.6 m) in Height Protected with Control Mode Density/Area Sprinklers at Ceiling.

(A) In multiple-row racks with a maximum of 10 ft (3.1 m) between the top of storage and the ceiling, protection shall be in accordance with Table 16.3.1.2 and in-rack sprinklers shall be installed as indicated in Figure 16.3.1.3.1.3(A)(a) through Figure 16.3.1.3.1.3(A)(c).

(B) The highest level of in-rack sprinklers shall be not more than 10 ft (3.1 m) below maximum storage height for Class I, Class II, or Class III commodities or 5 ft (1.5 m) below the top of storage for Class IV commodities.

16.3.1.3.2 In-Rack Sprinkler Spacing for Rack Storage of Class I Through Class IV Commodities Stored Over 25 ft (7.6 m) in Height Protected with Control Mode Density/Area Sprinklers at Ceiling.

16.3.1.3.2.1 In-Rack Sprinkler Spacing. In-rack sprinklers shall be staggered horizontally and vertically where installed in accordance with Table 16.3.1.1, Figure 16.3.1.3.1.1(A)(a) through Figure 16.3.1.3.1.1(A)(j), and Figure 16.3.1.3.1.2(A)(a) through Figure 16.3.1.3.1.2(A)(e).

16.3.1.3.2.2 In-rack sprinklers for storage higher than 25 ft (7.6 m) in double-row racks shall be spaced horizontally and located in the horizontal space nearest the vertical intervals specified in Table 16.3.1.1 and Figure 16.3.1.3.1.1(A)(a) through Figure 16.3.1.3.1.1(A)(j).

16.3.1.3.2.3 In-Rack Sprinkler Spacing. Maximum horizontal spacing of sprinklers in multiple-row racks with storage higher than 25 ft (7.6 m) shall be in accordance with Figure 16.3.1.3.1.3(A)(a) through Figure 16.3.1.3.1.3(A)(c).

16.3.1.3.2.4* In-rack sprinklers shall be located at an intersection of transverse and longitudinal flues while not exceeding the maximum spacing rules.

(A) Where distances between transverse flues exceed the maximum allowable distances, sprinklers shall be installed at the intersection of the transverse and longitudinal flues, and additional sprinklers shall be installed between transverse flues to meet the maximum distance rules.

(B) Where no transverse flues exist, in-rack sprinklers shall not exceed the maximum spacing rules.

Copyright 2014 National Fire Protection Association (NFPA). Licensed, by agreement, for individual use and download on October 4, 2014 to LEADER and READER for designated user PATTARAPORN SRITRAKOOL. No other reproduction or transmission in any form permitted without written permission of NFPA. For inquires or to report unauthorized use, contact licensing@nfpa.org.

Table 16.3.1.1 Single- or Double-Row Racks Without Solid Shelves of Class I Through Class IV Commodities Stored Over 25 ft (7.6 m) in Height with Aisles 4 ft (1.2 m) or More in Width

Commodity Class	In-Rack Sprinklers Approximate Vertical Spacing at Tier Nearest the Vertical Distance and Maximum Horizontal Spacing[a,b,c]		Figure	Maximum Storage Height	Stagger	Ceiling Sprinkler Operating Area		Ceiling Sprinkler Density Clearance to Ceiling Up to 10 ft (3.1 m)[g]			
								Ordinary Temperature		High Temperature	
	Longitudinal Flue[d]	Face[e,f]				ft²	m²	gpm/ft²	mm/min	gpm/ft²	mm/min
I	Vertical 20 ft (6.1 m) Horizontal 10 ft (3.1 m) under horizontal barriers	None	16.3.4.1.1.1(a)	30 ft (9.1 m)	No	2000	186	0.25	10.2	0.35	14.3
	Vertical 20 ft (6.1 m) Horizontal 10 ft (3.1 m)	Vertical 20 ft (6.1 m) Horizontal 10 ft (3.1 m)	16.3.4.1.1.1(b)	Higher than 25 ft (7.6 m)	Yes			0.25	10.2	0.35	14.3
I, II, III	Vertical 10 ft (3.1 m) or at 15 ft (4.6 m) and 25 ft (7.6 m)	None	16.3.4.1.1.1(c)	30 ft (9.1 m)	Yes	2000	186	0.3	12.2	0.4	16.3
	Vertical 10 ft (3.1 m) Horizontal 10 ft (3.1 m)	Vertical 30 ft (9.1 m) Horizontal 10 ft (3.1 m)	16.3.4.1.1.1(d)	Higher than 25 ft (7.6 m)	Yes			0.3	12.2	0.4	16.3
	Vertical 20 ft (6.1 m) Horizontal 10 ft (3.1 m)	Vertical 20 ft (6.1 m) Horizontal 5 ft (1.5 m)	16.3.4.1.1.1(e)		Yes			0.3	12.2	0.4	16.3
	Vertical 25 ft (7.6 m) Horizontal 5 ft (1.5 m)	Vertical 25 ft (7.6 m) Horizontal 5 ft (1.5 m)	16.3.4.1.1.1(f)		No			0.3	12.2	0.4	16.3
	Horizontal barriers at 20 ft (6.1 m) Vertical intervals — two lines of sprinklers under barriers — maximum horizontal spacing 10 ft (3.1 m), staggered		16.3.4.1.1.1(g)		Yes			0.3	12.2	0.4	16.3
I, II, III, IV	Vertical 15 ft (4.6 m) Horizontal 10 ft (3.1 m)	Vertical 20 ft (6.1 m) Horizontal 10 ft (3.1 m)	16.3.4.1.1.1(h)	Higher than 25 ft (7.6 m)	Yes	2000	186	0.35	14.3	0.45	18.3
	Vertical 20 ft (6.1 m) Horizontal 5 ft (1.5 m)	Vertical 20 ft (6.1 m) Horizontal 5 ft (1.5 m)	16.3.4.1.1.1(i)		No			0.35	14.3	0.45	18.3
	Horizontal barriers at 15 ft (4.6 m) Vertical intervals — two lines of sprinklers under barriers — maximum horizontal spacing 10 ft (3.1 m), staggered		16.3.4.1.1.1(j)		Yes			0.35	14.3	0.45	18.3

[a]Minimum in-rack sprinkler discharge, 30 gpm (114 L/min).

[b]Water shields required.

[c]All in-rack sprinkler spacing dimensions start from the floor.

[d]Install sprinklers at least 3 in. (76.2 mm) from uprights.

[e]Face sprinklers shall not be required for a Class I commodity consisting of noncombustible products on wood pallets (without combustible containers), except for arrays shown in Figure 16.3.1.3.1.1(A)(g) and Figure 16.3.1.3.1.1(A)(j).

[f]In Figure 16.3.1.3.1.1(A)(a) through Figure 16.3.1.3.1.1(A)(j), each square represents a storage cube that measures 4 ft to 5 ft (1.2 m to 1.5 m) on a side. Actual load heights can vary from approximately 18 in. to 10 ft (0.46 m to 3.1 m). Therefore, there can be one load to six or seven loads between in-rack sprinklers that are spaced 10 ft (3.1 m) apart vertically.

[g]For encapsulated commodity, increase density 25 percent.

Copyright 2014 National Fire Protection Association (NFPA). Licensed, by agreement, for individual use and download on October 4, 2014 to LEADER and READER for designated user PATTARAPORN SRITRAKOOL. No other reproduction or transmission in any form permitted without written permission of NFPA. For inquires or to report unauthorized use, contact licensing@nfpa.org.

Table 16.3.1.2 Multiple-Row Racks of Class I Through Class IV Commodities Stored Over 25 ft (7.6 m) in Height

Commodity Class	Encapsulated	In-Rack Sprinklers[a,b,c]						Height Limit (ft)	Stagger	Figure	Maximum Spacing from Top of Storage to Highest In-Rack Sprinklers		Ceiling Sprinkler Operating Area		Ceiling Sprinklers Density Clearance to Ceiling Up to 10 ft			
		Maximum Vertical Spacing		Maximum Horizontal Spacing in A Flue		Maximum Horizontal Spacing across Flue									165° Rating		286° Rating	
		ft	m	ft	m	ft	m				ft	m	ft^2	m^2	gpm/ft^2	mm/min	gpm/ft^2	mm/min
I	No	20	6.1	12	3.7	10	3.1	None	Between adjacent flues	16.3.4.1.3.1(a)	10	3.1	2000	186	0.25	10.2	0.35	14.3
	Yes														0.31		0.44	
I, II, and III	No	15	4.6	10	3.1	10	3.1			16.3.4.1.3.1(b)	10	3.1			0.30	12.2	0.40	16.3
	Yes														0.37		0.50	20.4
I, II, III, and IV	No	10	3.1	10	3.1	10	3.1			16.3.4.1.3.1(c)	5	1.5			0.35	14.3	0.45	18.3
	Yes														0.44		0.56	

For SI units, °C = 5⁄9 (°F–32); 1 gpm/ft^2 = 40.746 mm/min.

[a]All four rack faces shall be protected by sprinklers located within the racks and no more than 18 in. (0.46 m) from the faces, as indicated in Figure 16.3.1.3.1.3(A)(a) through Figure 16.3.1.3.1.3(A)(c). It shall not be required for each sprinkler level to protect all faces.

[b]All in-rack sprinkler spacing dimensions start from the floor.

'In Figure 16.3.1.3.1.3(A)(a) through Figure 16.3.1.3.1.3(A)(c), each square represents a storage cube measuring 4 ft to 5 ft (1.2 m to 1.5 m) on a side. Actual load heights can vary from approximately 18 in. to 10 ft (0.46 m to 3.1 m). Therefore, there could be as few as one load or as many as six or seven loads between in-rack sprinklers that are spaced 10 ft (3.1 m) apart vertically.

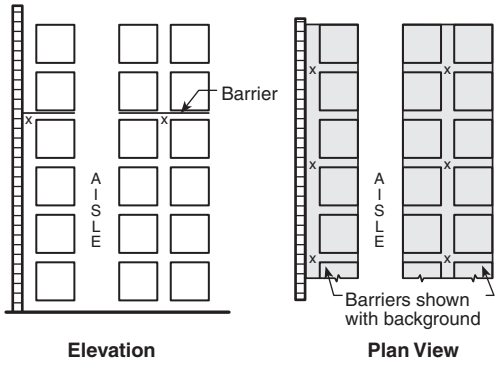

Notes:
1. Symbol x indicates in-rack sprinklers.
2. Each square represents a storage cube measuring 4 ft to 5 ft (1.2 m to 1.5 m) on a side. Actual load heights can vary from approximately 18 in. (0.5 m) up to 10 ft (3.1 m). Therefore, there could be as few as one load or as many as six or seven loads between in-rack sprinklers that are spaced 10 ft (3.1 m) apart vertically.

FIGURE 16.3.1.3.1.1(A)(a) In-Rack Sprinkler Arrangement, Class I Commodities, Storage Height 25 ft to Maximum 30 ft (7.6 m to Maximum 9.1 m).

Copyright 2014 National Fire Protection Association (NFPA). Licensed, by agreement, for individual use and download on October 4, 2014 to LEADER and READER for designated user PATTARAPORN SRITRAKOOL. No other reproduction or transmission in any form permitted without written permission of NFPA. For inquires or to report unauthorized use, contact licensing@nfpa.org.

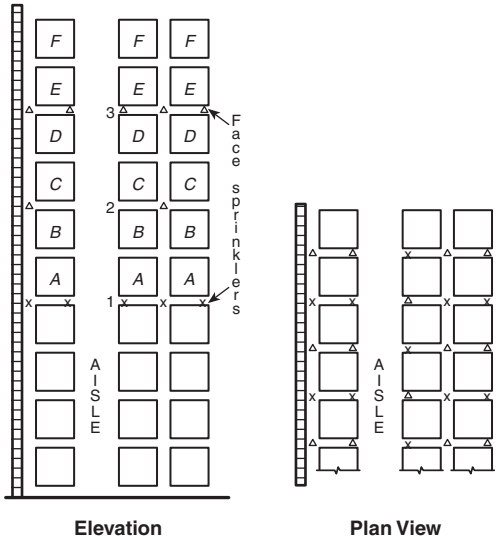

Notes:
1. Sprinklers labeled 1 (the selected array from Table 16.3.1.1) shall be required where loads labeled *A* or *B* represent top of storage.
2. Sprinklers labeled 1 and 2 shall be required where loads labeled *C* or *D* represent top of storage.
3. Sprinklers labeled 1 and 3 shall be required where loads labeled *E* or *F* represent top of storage.
4. For storage higher than represented by loads labeled *F*, the cycle defined by Notes 2 and 3 is repeated, with stagger as indicated.
5. Symbol Δ or x indicates sprinklers on vertical or horizontal stagger.
6. Each square represents a storage cube measuring 4 ft to 5 ft (1.2 m to 1.5 m) on a side. Actual load heights can vary from approximately 18 in. (0.5 m) up to 10 ft (3.1 m). Therefore, there could be as few as one load or as many as six or seven loads between in-rack sprinklers that are spaced 10 ft (3.1 m) apart vertically.

FIGURE 16.3.1.3.1.1(A)(b) In-Rack Sprinkler Arrangement, Class I Commodities, Storage Height Over 25 ft (7.6 m).

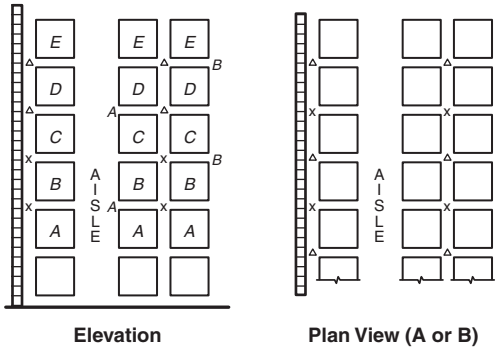

Notes:
1. Alternate location of in-rack sprinklers. Sprinklers shall be permitted to be installed above loads *A* and *C* or above loads *B* and *D*.
2. Symbol Δ or x indicates sprinklers on vertical or horizontal stagger.
3. Each square represents a storage cube measuring 4 ft to 5 ft (1.2 m to 1.5 m) on a side. Actual load heights can vary from approximately 18 in. (0.5 m) up to 10 ft (3.1 m). Therefore, there could be as few as one load or as many as six or seven loads between in-rack sprinklers that are spaced 10 ft (3.1 m) apart vertically.

FIGURE 16.3.1.3.1.1(A)(c) In-Rack Sprinkler Arrangement, Class I, II, or III Commodities, Storage Height 25 ft to Maximum 30 ft (7.6 m to Maximum 9.1 m).

Copyright 2014 National Fire Protection Association (NFPA). Licensed, by agreement, for individual use and download on October 4, 2014 to LEADER and READER for designated user PATTARAPORN SRITRAKOOL. No other reproduction or transmission in any form permitted without written permission of NFPA. For inquires or to report unauthorized use, contact licensing@nfpa.org.

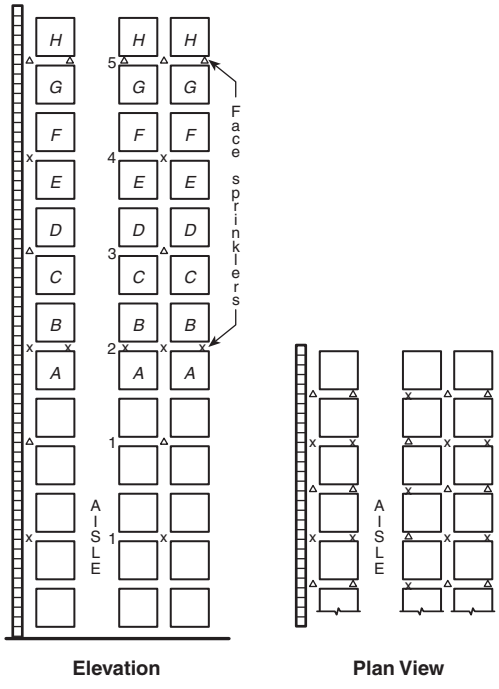

Notes:
1. Sprinklers labeled 1 shall be required where loads labeled *A* represent the top of storage.
2. Sprinklers labeled 1 and 2 shall be required where loads labeled *B* or *C* represent top of storage.
3. Sprinklers labeled 1, 2, and 3 shall be required where loads labeled *D* or *E* represent top of storage.
4. Sprinklers labeled 1, 2, 3, and 4 shall be required where loads labeled *F* or *G* represent top of storage.
5. Sprinklers labeled 1, 2, 3, 4, and 5 shall be required where loads labeled *H* represent top of storage.
6. For storage higher than represented by loads labeled *H*, the cycle defined by Notes 3, 4, and 5 is repeated with stagger as indicated.
7. The indicated face sprinklers shall be permitted to be omitted where commodity consists of unwrapped or unpackaged metal parts on wood pallets.
8. Symbol Δ or x indicates sprinklers on vertical or horizontal stagger.
9. Each square represents a storage cube measuring 4 ft to 5 ft (1.2 m to 1.5 m) on a side. Actual load heights can vary from approximately 18 in. (0.5 m) up to 10 ft (3.1 m). Therefore, there could be as few as one load or as many as six or seven loads between in-rack sprinklers that are spaced 10 ft (3.1 m) apart vertically.

FIGURE 16.3.1.3.1.1(A)(d) In-Rack Sprinkler Arrangement, Class I, II, or III Commodities, Storage Height Over 25 ft (7.6 m) — Option 1.

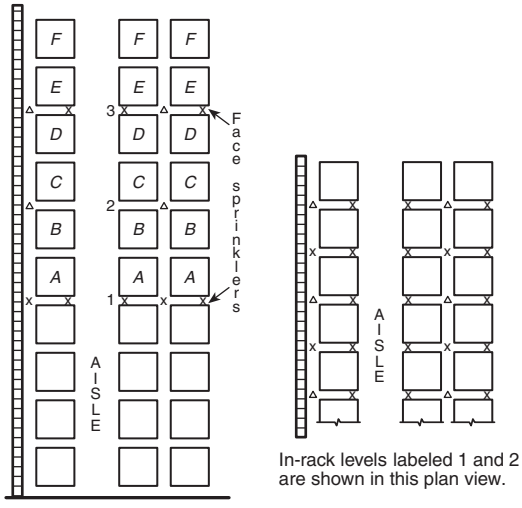

Notes:
1. Sprinklers labeled 1 (the selected array from Table 16.3.1.1) shall be required where loads labeled *A* or *B* represent top of storage.
2. Sprinklers labeled 1 and 2 shall be required where loads labeled *C* or *D* represent top of storage.
3. Sprinklers labeled 1 and 3 shall be required where loads labeled *E* or *F* represent top of storage.
4. For storage higher than represented by loads labeled *F*, the cycle defined by Notes 2 and 3 is repeated, with stagger as indicated.
5. Symbol Δ or x indicates sprinklers on vertical or horizontal stagger.
6. Each square represents a storage cube measuring 4 ft to 5 ft (1.2 m to 1.5 m) on a side. Actual load heights can vary from approximately 18 in. (0.5 m) up to 10 ft (3.1 m). Therefore, there could be as few as one load or as many as six or seven loads between in-rack sprinklers that are spaced 10 ft (3.1 m) apart vertically.

FIGURE 16.3.1.3.1.1(A)(e) In-Rack Sprinkler Arrangement, Class I, II, or III Commodities, Storage Height Over 25 ft (7.6 m) — Option 2.

Copyright 2014 National Fire Protection Association (NFPA). Licensed, by agreement, for individual use and download on October 4, 2014 to LEADER and READER for designated user PATTARAPORN SRITRAKOOL. No other reproduction or transmission in any form permitted without written permission of NFPA. For inquires or to report unauthorized use, contact licensing@nfpa.org.

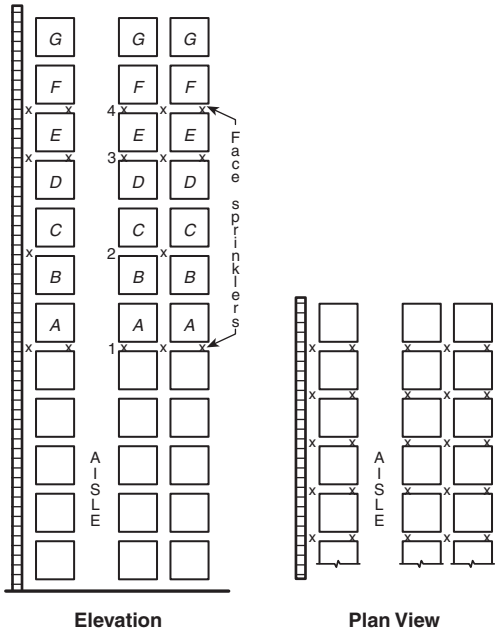

Notes:
1. Sprinklers labeled 1 (the selected array from Table 16.3.1.1) shall be required where loads labeled *A* or *B* represent top of storage.
2. Sprinklers labeled 1 and 2 shall be required where loads labeled *C* or *D* represent top of storage.
3. Sprinklers labeled 1 and 3 shall be required where loads labeled *E* represent top of storage.
4. Sprinklers labeled 1 and 4 shall be required where loads labeled *F* or *G* represent top of storage.
5. For storage higher than represented by loads labeled *G*, the cycle defined by Notes 2, 3, and 4 is repeated.
6. Symbol x indicates face and in-rack sprinklers.
7. Each square represents a storage cube measuring 4 ft to 5 ft (1.2 m to 1.5 m) on a side. Actual load heights can vary from approximately 18 in. (0.5 m) up to 10 ft (3.1 m). Therefore, there could be as few as one load or as many as six or seven loads between in-rack sprinklers that are spaced 10 ft (3.1 m) apart vertically.

FIGURE 16.3.1.3.1.1(A)(f) In-Rack Sprinkler Arrangement, Class I, II, or III Commodities, Storage Height Over 25 ft (7.6 m) — Option 3.

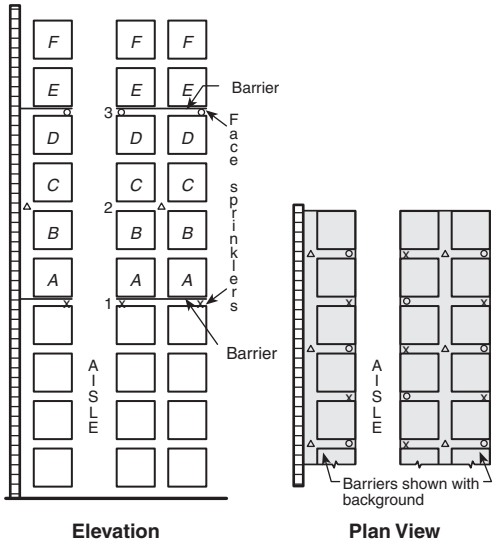

Notes:
1. Sprinklers labeled 1 (the selected array from Table 16.3.1.1) shall be required where loads labeled *A* or *B* represent top of storage.
2. Sprinklers labeled 1 and 2 shall be required where loads labeled *C* or *D* represent top of storage.
3. Sprinklers labeled 1 and 3 shall be required where loads labeled *E* or *F* represent top of storage.
4. For storage higher than represented by loads labeled *F*, the cycle defined by Notes 2 and 3 is repeated.
5. Symbols o, Δ, and x indicate sprinklers on vertical or horizontal stagger.
6. Each square represents a storage cube measuring 4 ft to 5 ft (1.2 m to 1.5 m) on a side. Actual load heights can vary from approximately 18 in. (0.5 m) up to 10 ft (3.1 m). Therefore, there could be as few as one load or as many as six or seven loads between in-rack sprinklers that are spaced 10 ft (3.1 m) apart vertically.

FIGURE 16.3.1.3.1.1(A)(g) In-Rack Sprinkler Arrangement, Class I, II, or III Commodities, Storage Height Over 25 ft (7.6 m) — Option 4.

Copyright 2014 National Fire Protection Association (NFPA). Licensed, by agreement, for individual use and download on October 4, 2014 to LEADER and READER for designated user PATTARAPORN SRITRAKOOL. No other reproduction or transmission in any form permitted without written permission of NFPA. For inquires or to report unauthorized use, contact licensing@nfpa.org.

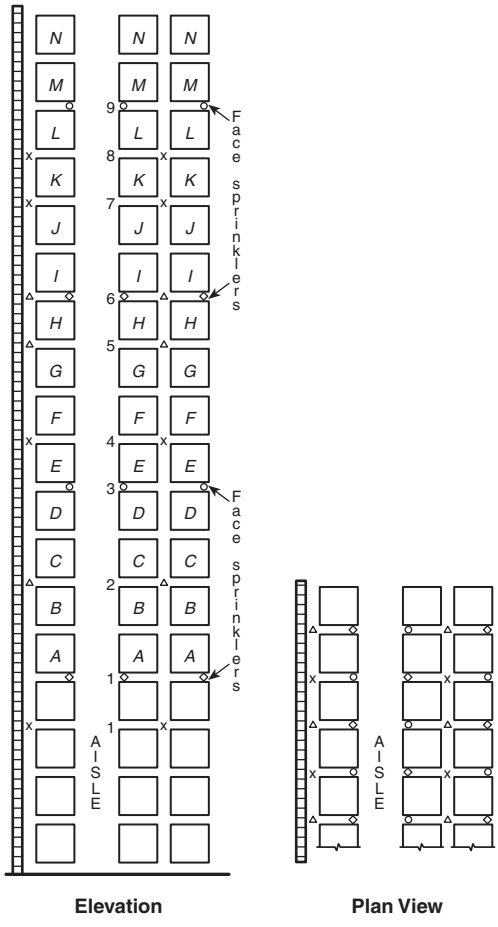

Notes:
1. Sprinklers labeled 1 (the selected array from Table 16.3.1.1) shall be required where loads labeled *A* or *B* represent top of storage.
2. Sprinklers labeled 1 and 2 shall be required where loads labeled *C* or *D* represent top of storage.
3. Sprinklers labeled 1, 2, and 3 shall be required where loads labeled *E* or *F* represent top of storage.
4. Sprinklers labeled 1, 2, 3, and 4 shall be required where loads labeled *G* represent top of storage.
5. Sprinklers labeled 1, 2, 3, 4, and 5 shall be required where loads labeled *H* represent top of storage.
6. Sprinklers labeled 1, 2, 3, 4, and 6 (not 5) shall be required where loads labeled *I* or *J* represent top of storage.
7. Sprinklers labeled 1, 2, 3, 4, 6, and 7 shall be required where loads labeled *K* represent top of storage.
8. Sprinklers labeled 1, 2, 3, 4, 6, and 8 shall be required where loads labeled *L* represent top of storage.
9. Sprinklers labeled 1, 2, 3, 4, 6, 8, and 9 shall be required where loads labeled *M* or *N* represent top of storage.
10. For storage higher than represented by loads labeled *N*, the cycle defined by Notes 1 through 9 is repeated, with stagger as indicated. In the cycle, loads labeled *M* are equivalent to loads labeled *A*.
11. Symbols o, x, and Δ indicate sprinklers on vertical or horizontal stagger.
12. Each square represents a storage cube measuring 4 ft to 5 ft (1.2 m to 1.5 m) on a side. Actual load heights can vary from approximately 18 in. (0.5 m) up to 10 ft (3.1 m). Therefore, there could be as few as one load or as many as six or seven loads between in-rack sprinklers that are spaced 10 ft (3.1 m) apart vertically.

FIGURE 16.3.1.3.1.1(A)(h) In-Rack Sprinkler Arrangement, Class I, II, III, or IV Commodities, Storage Height Over 25 ft (7.6 m) — Option 1.

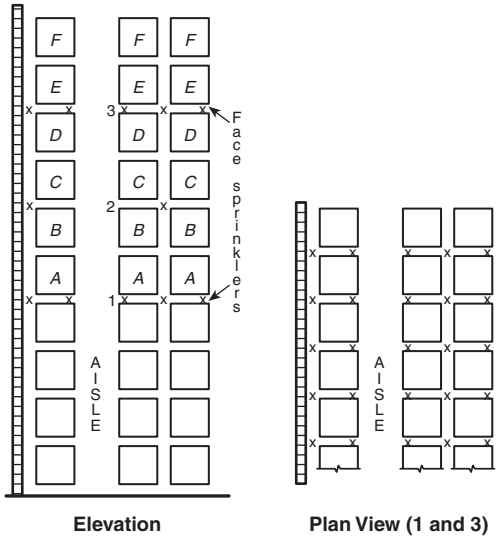

Notes:
1. Sprinklers labeled 1 (the selected array from Table 16.3.1.1) shall be required where loads labeled *A* or *B* represent top of storage.
2. Sprinklers labeled 1 and 2 shall be required where loads labeled *C* or *D* represent top of storage.
3. Sprinklers labeled 1 and 3 shall be required where loads labeled *E* or *F* represent top of storage.
4. For storage higher than represented by loads labeled *F*, the cycle defined by Notes 2 and 3 is repeated.
5. Symbol x indicates face and in-rack sprinklers.
6. Each square represents a storage cube measuring 4 ft to 5 ft (1.2 m to 1.5 m) on a side. Actual load heights can vary from approximately 18 in. (0.5 m) up to 10 ft (3.1 m). Therefore, there could be as few as one load or as many as six or seven loads between in-rack sprinklers that are spaced 10 ft (3.1 m) apart vertically.

FIGURE 16.3.1.3.1.1(A)(i) In-Rack Sprinkler Arrangement, Class I, II, III, or IV Commodities, Storage Height Over 25 ft (7.6 m) — Option 2.

Copyright 2014 National Fire Protection Association (NFPA). Licensed, by agreement, for individual use and download on October 4, 2014 to LEADER and READER for designated user PATTARAPORN SRITRAKOOL. No other reproduction or transmission in any form permitted without written permission of NFPA. For inquires or to report unauthorized use, contact licensing@nfpa.org.

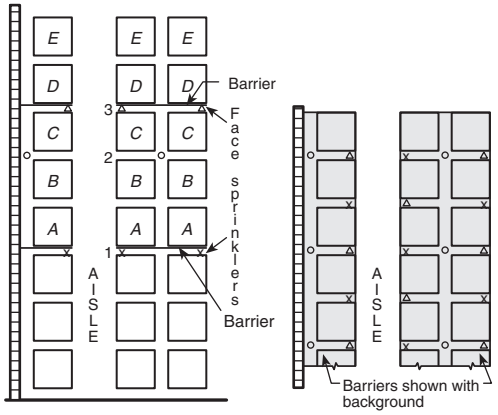

Notes:
1. Sprinklers labeled 1 (the selected array from Table 16.3.1.1) shall be required where loads labeled *A* or *B* represent top of storage.
2. Sprinklers labeled 1 and 2 and barrier labeled 1 shall be required where loads labeled *C* represent top of storage.
3. Sprinklers and barriers labeled 1 and 3 shall be required where loads labeled *D* or *E* represent top of storage.
4. For storage higher than represented by loads labeled *E*, the cycle defined by Notes 2 and 3 is repeated.
5. Symbol Δ or x indicates sprinklers on vertical or horizontal stagger.
6. Symbol o indicates longitudinal flue space sprinklers.
7. Each square represents a storage cube measuring 4 ft to 5 ft (1.2 m to 1.5 m) on a side. Actual load heights can vary from approximately 18 in. (0.5 m) up to 10 ft (3.1 m). Therefore, there could be as few as one load or as many as six or seven loads between in-rack sprinklers that are spaced 10 ft (3.1 m) apart vertically.

FIGURE 16.3.1.3.1.1(A)(j) In-Rack Sprinkler Arrangement, Class I, II, III, or IV Commodities, Storage Height Over 25 ft (7.6 m) — Option 3.

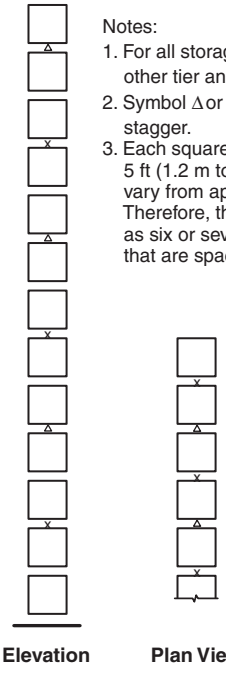

Notes:
1. For all storage heights, sprinklers shall be installed in every other tier and staggered as indicated.
2. Symbol Δ or x indicates sprinklers on vertical or horizontal stagger.
3. Each square represents a storage cube measuring 4 ft to 5 ft (1.2 m to 1.5 m) on a side. Actual load heights can vary from approximately 18 in. (0.5 m) up to 10 ft (3.1 m). Therefore, there could be as few as one load or as many as six or seven loads between in-rack sprinklers that are spaced 10 ft (3.1 m) apart vertically.

FIGURE 16.3.1.3.1.2(A)(a) In-Rack Sprinkler Arrangement, Class I, II, III, or IV Commodities, Single-Row Racks, Storage Height Over 25 ft (7.6 m) — Option 1.

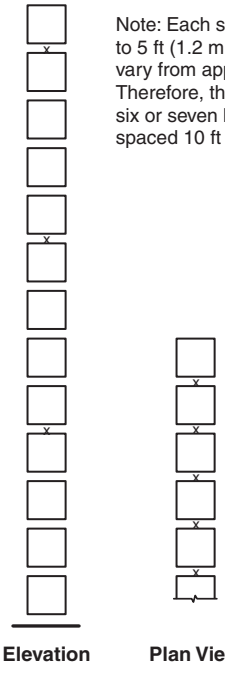

Note: Each square represents a storage cube measuring 4 ft to 5 ft (1.2 m to 1.5 m) on a side. Actual load heights can vary from approximately 18 in. (0.5 m) up to 10 ft (3.1 m). Therefore, there could be as few as one load or as many as six or seven loads between in-rack sprinklers that are spaced 10 ft (3.1 m) apart vertically.

FIGURE 16.3.1.3.1.2(A)(b) In-Rack Sprinkler Arrangement, Class I, II, or III Commodities, Single-Row Racks, Storage Height Over 25 ft (7.6 m) — Option 1.

Copyright 2014 National Fire Protection Association (NFPA). Licensed, by agreement, for individual use and download on October 4, 2014 to LEADER and READER for designated user PATTARAPORN SRITRAKOOL. No other reproduction or transmission in any form permitted without written permission of NFPA. For inquires or to report unauthorized use, contact licensing@nfpa.org.

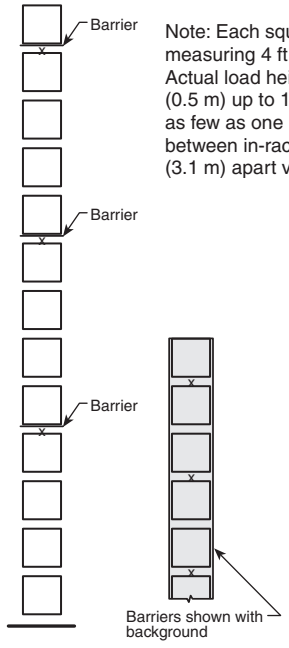

FIGURE 16.3.1.3.1.2(A)(c) In-Rack Sprinkler Arrangement, Class I, II, or III Commodities, Single-Row Racks, Storage Height Over 25 ft (7.6 m) — Option 2.

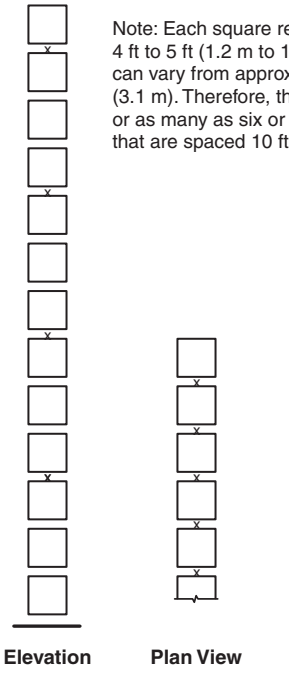

FIGURE 16.3.1.3.1.2(A)(d) In-Rack Sprinkler Arrangement, Class I, II, III, or IV Commodities, Single-Row Racks, Storage Height Over 25 ft (7.6 m) — Option 2.

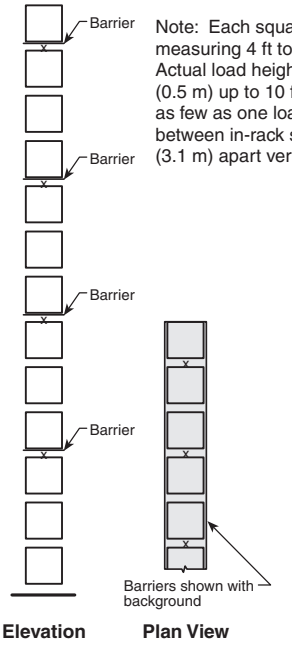

FIGURE 16.3.1.3.1.2(A)(e) In-Rack Sprinkler Arrangement, Class I, II, III, or IV Commodities, Single-Row Racks, Storage Height Over 25 ft (7.6 m) — Option 3.

16.3.1.3.3 In-Rack Sprinkler Water Demand for Rack Storage of Class I Through Class IV Commodities Stored Over 25 ft (7.6 m) in Height Protected with Control Mode Density/Area Sprinklers at the Ceiling. The water demand for sprinklers installed in racks shall be based on simultaneous operation of the most hydraulically remote sprinklers as follows:

(1) Six sprinklers where only one level is installed in racks with Class I, Class II, or Class III commodities
(2) Eight sprinklers where only one level is installed in racks with Class IV commodities
(3) Ten sprinklers (five on each two top levels) where more than one level is installed in racks with Class I, Class II, or Class III commodities
(4) Fourteen sprinklers (seven on each two top levels) where more than one level is installed in racks with Class IV commodities

16.3.1.3.3.1 In-Rack Sprinkler Discharge for Rack Storage of Class I Through Class IV Commodities Stored Over 25 ft (7.6 m) in Height Protected with Control Mode Density/Area Sprinklers at the Ceiling. Sprinklers in racks shall discharge at a rate not less than 30 gpm (113.6 L/min) for all classes of commodities.

16.3.2 CMSA Sprinklers for Rack Storage of Class I Through Class IV Commodities Stored Over 25 ft (7.6 m) in Height.

16.3.2.1 Protection of single-, double-, and multiple-row rack storage without solid shelves for Class I through Class IV commodities shall be in accordance with Table 16.3.2.1.

16.3.2.2 Where in-rack sprinklers are required by Table 16.3.2.1, in-rack sprinkler spacing, design pressure, and hydraulic calculation criteria shall be in accordance with the requirements of 16.3.1.3 as applicable for the commodity.

16.3.2.3 Protection shall be provided as specified in Table 16.3.2.1 or appropriate NFPA standards in terms of minimum operating pressure and the number of sprinklers to be included in the design area.

Copyright 2014 National Fire Protection Association (NFPA). Licensed, by agreement, for individual use and download on October 4, 2014 to LEADER and READER for designated user PATTARAPORN SRITRAKOOL. No other reproduction or transmission in any form permitted without written permission of NFPA. For inquires or to report unauthorized use, contact licensing@nfpa.org.

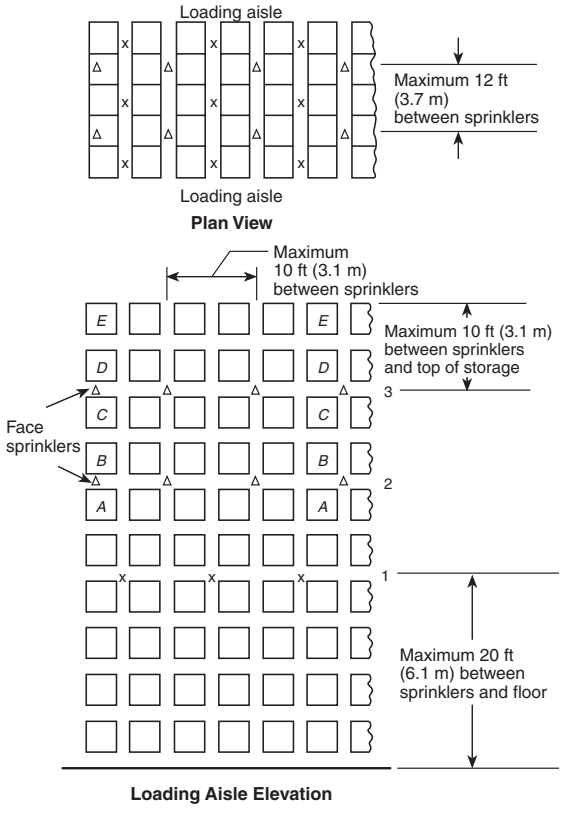

Notes:
1. Sprinklers labeled 1 shall be required if loads labeled *A* represent top of storage.
2. Sprinklers labeled 1 and 2 shall be required if loads labeled *B* or *C* represent top of storage.
3. Sprinklers labeled 1 and 3 shall be required if loads labeled *D* or *E* represent top of storage.
4. For storage higher than represented by loads labeled *E*, the cycle defined by Notes 2 and 3 is repeated, with stagger as indicated.
5. Symbol Δ or x indicates sprinklers on vertical or horizontal stagger.
6. Each square represents a storage cube measuring 4 ft to 5 ft (1.2 m to 1.5 m) on a side. Actual load heights can vary from approximately 18 in. (0.5 m) up to 10 ft (3.1 m). Therefore, there could be as few as one load or as many as six or seven loads between in-rack sprinklers that are spaced 10 ft (3.1 m) apart vertically.

FIGURE 16.3.1.3.1.3(A)(a) In-Rack Sprinkler Arrangement, Class I Commodities, Multiple-Row Racks, Storage Height Over 25 ft (7.6 m).

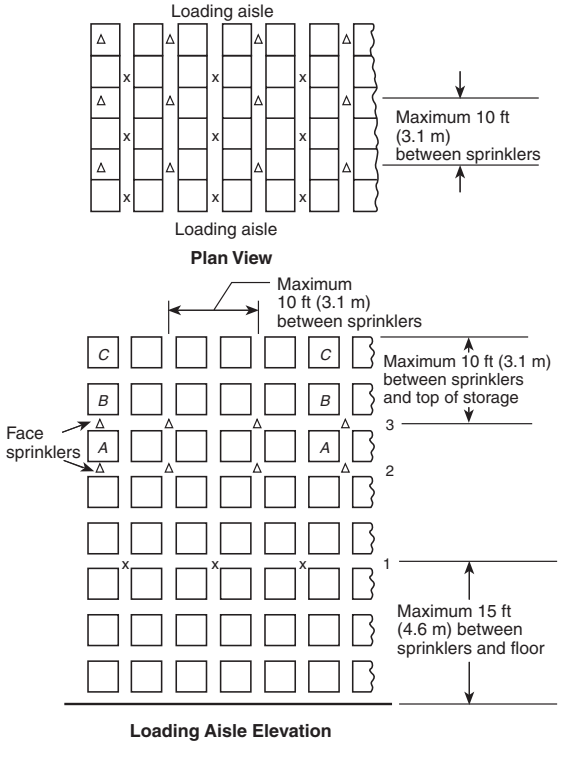

Notes:
1. Sprinklers labeled 1 and 2 shall be required if loads labeled *A* represent top of storage.
2. Sprinklers labeled 1 and 3 shall be required if loads labeled *B* or *C* represent top of storage.
3. For storage higher than represented by loads labeled *C*, the cycle defined by Notes 2 and 3 is repeated, with stagger as indicated.
4. Symbol Δ or x indicates sprinklers on vertical or horizontal stagger.
5. Each square represents a storage cube measuring 4 ft to 5 ft (1.2 m to 1.5 m) on a side. Actual load heights can vary from approximately 18 in. (0.5 m) up to 10 ft (3.1 m). Therefore, there could be as few as one load or as many as six or seven loads between in-rack sprinklers that are spaced 10 ft (3.1 m) apart vertically.

FIGURE 16.3.1.3.1.3(A)(b) In-Rack Sprinkler Arrangement, Class I, II, or III Commodities, Multiple-Row Racks, Storage Height Over 25 ft (7.6 m).

Copyright 2014 National Fire Protection Association (NFPA). Licensed, by agreement, for individual use and download on October 4, 2014 to LEADER and READER for designated user PATTARAPORN SRITRAKOOL. No other reproduction or transmission in any form permitted without written permission of NFPA. For inquires or to report unauthorized use, contact licensing@nfpa.org.

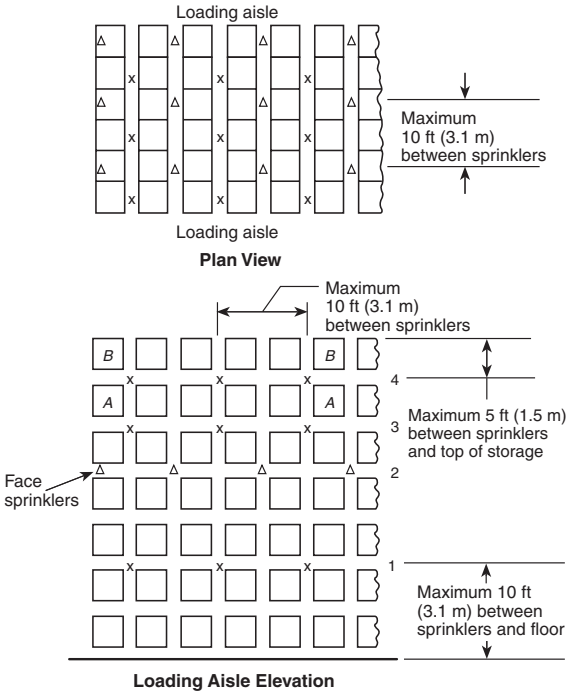

Notes:

1. Sprinklers labeled 1, 2, and 3 shall be required if loads labeled *A* represent top of storage.
2. Sprinklers labeled 1, 2, and 4 shall be required if loads labeled *B* represent top of storage.
3. For storage higher than represented by loads labeled *B*, the cycle defined by Notes 1 and 2 is repeated, with stagger as indicated.
4. Symbol Δ or x indicates sprinklers on vertical or horizontal stagger.
5. Each square represents a storage cube measuring 4 ft to 5 ft (1.2 m to 1.5 m) on a side. Actual load heights can vary from approximately 18 in. (0.5 m) up to 10 ft (3.1 m). Therefore, there could be as few as one load or as many as six or seven loads between in-rack sprinklers that are spaced 10 ft (3.1 m) apart vertically.

FIGURE 16.3.1.3.1.3(A)(c) In-Rack Sprinkler Arrangement, Class I, II, III, or IV Commodities, Multiple-Row Racks, Storage Height Over 25 ft (7.6 m).

Table 16.3.2.1 CMSA Sprinkler Design Criteria for Rack Storage of Class I Through Class IV Commodities Stored Over 25 ft (7.6 m) in Height (Encapsulated and Nonencapsulated)

Storage Arrangement	Commodity Class	Maximum Storage Height		Maximum Ceiling/Roof Height		K-Factor/ Orientation	Type of System	Number of Design Sprinklers	Minimum Operating Pressure	
		ft	m	ft	m				psi	bar
Single-, double-, and multiple-row racks without solid shelves (no open-top containers)	Class I or II	30	9.1	35	10.6	11.2 (160) Upright	Wet	20 + 1 level of in-rack	25	1.7
							Dry	30 + 1 level of in-rack	25	1.7
						16.8 (240) Upright	Wet	20 + 1 level of in-rack	15	1.0
							Dry	30 + 1 level of in-rack	15	1.0
						19.6 (280) Pendent	Wet	15	25	1.7
		35	10.6	40	12.1	11.2 (160) Upright	Dry*	36	55	3.8
						16.8 (240) Upright	Dry*	36	22	1.5
						19.6 (280) Pendent	Wet	15	30	2.1
	Class III or IV	30	9.1	35	10.6	19.6 (280) Pendent	Wet	15	25	1.7
		35	10.6	40	12.1	19.6 (280) Pendent	Wet	15	30	2.1

*High temperature–rated sprinklers shall be used. Dry system water delivery shall be determined in accordance with 7.2.3.6 with a maximum time of water delivery of 30 seconds with four sprinklers initially open.

Copyright 2014 National Fire Protection Association (NFPA). Licensed, by agreement, for individual use and download on October 4, 2014 to LEADER and READER for designated user PATTARAPORN SRITRAKOOL. No other reproduction or transmission in any form permitted without written permission of NFPA. For inquires or to report unauthorized use, contact licensing@nfpa.org.

16.3.2.4 Open Wood Joist Construction.

16.3.2.4.1 Where CMSA sprinklers are installed under open wood joist construction, their minimum operating pressure shall be 50 psi (3.4 bar) for a K-11.2 (160) sprinkler or 22 psi (1.5 bar) for a K-16.8 (240) sprinkler.

16.3.2.4.2 Where each joist channel of open wood joist construction is fully firestopped to its full depth at intervals not exceeding 20 ft (6.1 m), the lower pressures specified in Table 16.3.2.1 shall be permitted to be used.

16.3.2.5 Preaction Systems. For the purpose of using Table 16.3.2.1, preaction systems shall be classified as dry pipe systems.

16.3.2.6 Building steel shall not require special protection where Table 16.3.2.1 are applied as appropriate for the storage configuration.

16.3.2.7 In-Rack Sprinklers for Rack Storage of Class I Through Class IV Commodities Stored Over 25 ft (7.6 m) in Height Protected with CMSA Sprinklers at the Ceiling.

16.3.2.7.1 Where in-rack sprinklers are required by Table 16.3.2.1 in-rack sprinklers shall be installed at the first tier level at or above one-half of the storage height.

16.3.2.7.2 The minimum of 6 in. (152 mm) vertical clear space shall be maintained between the sprinkler deflectors and the top of a tier of storage.

16.3.2.7.3 In-rack sprinklers shall be located at an intersection of transverse and longitudinal flues.

16.3.2.7.4 The maximum horizontal distance between in-rack sprinklers shall be 5 ft (1.5 m).

16.3.2.7.5 Where distances between transverse flues exceed the maximum allowable distances, sprinklers shall be installed at the intersection of the transverse and longitudinal flues, and additional sprinklers shall be installed between transverse flues to meet the maximum distance rules.

16.3.2.7.6 Where no transverse flues exist, in-rack sprinklers shall not exceed the maximum spacing rules.

16.3.2.7.7 In-Rack Sprinkler Water Demand. The water demand for sprinklers installed in racks shall be based on simultaneous operation of the most hydraulically remote eight sprinklers.

16.3.2.7.8 In-Rack Sprinkler Discharge Pressure. Sprinklers in racks shall discharge at not less than 15 psi (1 bar) for all classes of commodities. *(See Section C.19.)*

16.3.3* Early Suppression Fast-Response (ESFR) Sprinklers for Rack Storage of Class I Through Class IV Commodities Stored Over 25 ft (7.6 m) in Height.

16.3.3.1 Protection of single-, double-, and multiple-row rack storage of Class I through Class IV commodities shall be in accordance with Table 16.3.3.1.

16.3.3.2 ESFR protection as defined shall not apply to the following:

(1) Rack storage involving solid shelves
(2) Rack storage involving combustible, open-top cartons or containers

16.3.3.3 ESFR sprinkler systems shall be designed such that the minimum operating pressure is not less than that indicated in Table 16.3.3.1 for type of storage, commodity, storage height, and building height involved.

16.3.3.4 The design area shall consist of the most hydraulically demanding area of 12 sprinklers, consisting of four sprinklers on each of three branch lines.

16.3.3.5 Where required by Table 16.3.3.1, one level of K-8.0 (115) or K-11.2 (160) quick-response, ordinary-temperature in-rack sprinklers shall be installed at the tier level closest to but not exceeding one-half of the maximum storage height.

16.3.3.5.1 In-rack sprinkler hydraulic design criteria shall be the most hydraulically remote eight sprinklers at 60 gpm (227 L/min).

16.3.3.5.2 In-rack sprinklers shall be located at the intersection of the longitudinal and transverse flue space.

16.3.3.5.3 Horizontal spacing shall not be permitted to exceed 5 ft (1.5 m) intervals.

16.3.3.5.4 The minimum of 6 in. (152 mm) vertical clear space shall be maintained between the sprinkler deflectors and the top of a tier of storage.

16.3.3.5.5 In-rack sprinklers shall be located at an intersection of transverse and longitudinal flues while not exceeding the maximum spacing rules.

16.3.3.5.6 Where distances between transverse flues exceed the maximum allowable distances, sprinklers shall be installed at the intersection of the transverse and longitudinal flues, and additional sprinklers shall be installed between transverse flues to meet the maximum distance rules.

16.3.3.5.7 Where no transverse flues exist, in-rack sprinklers shall not exceed the maximum spacing rules.

16.3.4 Special Design for Rack Storage of Class I Through Class IV Commodities Stored Over 25 ft (7.6 m) in Height.

16.3.4.1 Where high-expansion foam systems are used for storage over 25 ft (7.6 m) high up to and including 35 ft (10.7 m) high, they shall be used in combination with ceiling sprinklers.

16.3.4.2 The maximum submergence time for the high-expansion foam shall be 5 minutes for Class I, Class II, or Class III commodities and 4 minutes for Class IV commodities.

Copyright 2014 National Fire Protection Association (NFPA). Licensed, by agreement, for individual use and download on October 4, 2014 to LEADER and READER for designated user PATTARAPORN SRITRAKOOL. No other reproduction or transmission in any form permitted without written permission of NFPA. For inquires or to report unauthorized use, contact licensing@nfpa.org.

Table 16.3.3.1 ESFR Sprinkler Protection of Rack Storage Without Solid Shelves of Class I Through Class IV Commodities Stored Over 25 ft (7.6 m) in Height

Storage Arrangement	Commodity	Maximum Storage Height		Maximum Ceiling/ Roof Height		Nominal K-Factor	Orientation	Minimum Operating Pressure		In-Rack Sprinkler Requirements	Hose Stream Allowance		Water Supply Duration (hours)
		ft	m	ft	m			psi	bar		gpm	L/min	
Single-, double-, and multiple-row rack (no open-top containers)	Class I, II, III, or IV, encapsulated or nonencapsulated	30	9.1	35	10.7	14.0 (200)	Upright/pendent	75	5.2	No	250	946	1
						16.8 (240)	Upright/ pendent	52	3.6	No			
						22.4 (320)	Pendent	35	2.4	No			
						25.2 (360)	Pendent	20	1.4	No			
				40	12.2					No			
						16.8 (240)	Pendent	52	3.6	No			
						22.4 (320)	Pendent	40	2.8	No			
						25.2 (360)	Pendent	25	1.7	No			
				45	13.7	14.0 (200)	Pendent	90	6.2	Yes			
						16.8 (240)	Pendent	63	4.3	Yes			
						22.4 (320)	Pendent	40	2.8	No			
						25.2 (360)	Pendent	40	2.8	No			
		35	10.7	40	12.2					No			
						16.8 (240)	Pendent	52	3.6	No			
						22.4 (320)	Pendent	40	2.8	No			
						25.2 (360)	Pendent	25	1.7	No			
				45	13.7	14.0 (200)	Pendent	90	6.2	Yes			
						16.8 (240)	Pendent	63	4.3	Yes			
						22.4 (320)	Pendent	40	2.8	No			
						25.2 (360)	Pendent	40	2.8	No			
		40	12.2	45	13.7	16.8 (240)	Pendent	63	4.3	Yes			
						22.4 (320)	Pendent	40	2.8	No			
						25.2 (360)	Pendent	40	2.8	No			

Copyright 2014 National Fire Protection Association (NFPA). Licensed, by agreement, for individual use and download on October 4, 2014 to LEADER and READER for designated user PATTARAPORN SRITRAKOOL. No other reproduction or transmission in any form permitted without written permission of NFPA. For inquires or to report unauthorized use, contact licensing@nfpa.org.

Chapter 17 Protection of Rack Storage of Plastic and Rubber Commodities

17.1 General.

17.1.1 This chapter shall apply to storage of plastic and rubber commodities stored in racks. The requirements of Chapter 12 shall apply unless modified by this chapter. *(See Section C.9.)*

17.1.1.1 This chapter also shall be used to determine protection for commodities that are not entirely Group A plastics but contain such quantities and arrangements of Group A plastics that they are deemed more hazardous than Class IV commodities.

17.1.2 Sprinkler Protection Criteria.

17.1.2.1* Plastic commodities shall be protected in accordance with Figure 17.1.2.1. *(See Section C.21.)*

17.1.2.2 The design criteria of Chapter 17 for single- and double-row rack storage of plastic commodities shall be applicable where aisles are 3.5 ft (1.07 m) or greater in width.

17.1.2.3 Storage with aisles less than 3.5 ft (1.07 m) shall be protected as multiple-row rack storage.

17.1.2.4 Group B plastics and free-flowing Group A plastics shall be protected the same as Class IV commodities.

17.1.2.5 Group C plastics shall be protected the same as Class III commodities.

17.1.2.6 Sprinkler protection criteria for the storage of materials on racks shall be in accordance with Section 17.2 for storage up to 25 ft (7.6 m) and Section 17.3 for storage over 25 ft (7.6 m).

17.1.2.7* Protection criteria for Group A plastics shall be permitted for the protection of the same storage height and configuration of Class I, II, III, and IV commodities.

17.1.3 Movable Racks. Rack storage in movable racks shall be protected in the same manner as multiple-row racks.

17.1.4 Fire Protection of Steel Columns — Columns Within Storage Racks. See Section C.10.

17.1.4.1 Where fireproofing of building columns is not provided and storage heights are in excess of 15 ft (4.6 m), protection of building columns within the rack structure or vertical rack members supporting the building shall be protected in accordance with one of the following:

(1) In-rack sprinklers
(2) Sidewall sprinklers at the 15 ft (4.6 m) elevation, pointed toward one side of the steel column
(3) Provision of ceiling sprinkler density for a minimum of 2000 ft^2 (186 m^2) with ordinary temperature– or high temperature–rated sprinklers as shown in Table 17.1.4.1 for storage heights above 15 ft (4.6 m) up to and including 20 ft (6.1 m)
(4) Provision of CMSA or ESFR ceiling sprinkler protection

Table 17.1.4.1 Ceiling Sprinkler Densities for Protection of Steel Building Columns

Commodity Classification	Aisle Width			
	4 ft (1.2 m)		8 ft (2.4 m)	
	gpm/ft^2	(L/min)/m^2	gpm/ft^2	(L/min)/m^2
Plastics	0.68	27.7	0.57	23.2

• **17.1.4.2** The flow from a column sprinkler(s) shall be permitted to be omitted from the sprinkler system hydraulic calculations.

17.1.5 Solid Shelf Rack.

17.1.5.1 Where solid shelving in single-, double-, and multiple-row racks exceeds 20 ft^2 (1.86 m^2) but does not exceed 64 ft^2 (5.95 m^2) in area, sprinklers shall not be required below every shelf, but shall be installed at the ceiling and below shelves at intermediate levels not more than 6 ft (2 m) apart vertically. *(See Section C.11.)*

17.1.5.2 Where solid shelving in single-, double-, and multiple-row racks exceeds 64 ft^2 (5.95 m^2) in area or where the levels of storage exceed 6 ft (2 m), sprinklers shall be installed at the ceiling and below each level of shelving.

17.1.5.3 Where multiple-row racks of any height have no longitudinal flue or where double-row racks with storage up 25 ft (7.6 m) in height have no longitudinal flue, the situation shall not be considered solid shelves where transverse flues exist at maximum 5 ft (1.5 m) intervals and additional in-rack sprinklers shall not be required in accordance with 17.1.5.1 and 17.1.5.2.

17.1.5.4 The maximum horizontal spacing between in-rack sprinklers shall be 5 ft (1.5 m).

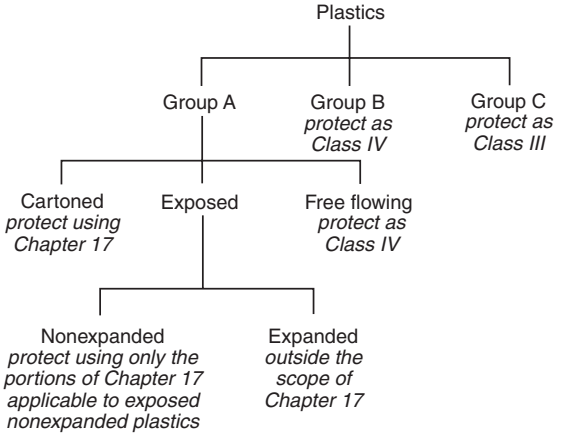

FIGURE 17.1.2.1 Decision Tree.

Note: Cartons that contain Group A plastic material can be treated as Class IV commodities under the following conditions:
(1) There shall be multiple layers of corrugation or equivalent outer material that would significantly delay fire involvement of the Group A plastic.
(2) The amount and arrangement of Group A plastic material within an ordinary carton would not be expected to significantly increase the fire hazard.

Copyright 2014 National Fire Protection Association (NFPA). Licensed, by agreement, for individual use and download on October 4, 2014 to LEADER and READER for designated user PATTARAPORN SRITRAKOOL. No other reproduction or transmission in any form permitted without written permission of NFPA. For inquires or to report unauthorized use, contact licensing@nfpa.org.

17.1.5.5 Design criteria for combined ceiling and in-rack sprinklers shall be used for the storage configurations in 17.1.5.1 and 17.1.5.2.

17.1.5.6 Where the criteria in 17.1.5.7 are not met, the water demand for the in-rack sprinklers shall be based on a minimum flow of 30 gpm (114 L/min) discharging from the following number of sprinklers balanced to the ceiling sprinkler demand in accordance with Section 23.8:

(1) Eight sprinklers where only one level of in-rack sprinklers is installed
(2) Fourteen sprinklers (seven on each of the top two levels) when more than one level of in-rack sprinklers is installed

17.1.5.7 The water demand for in-rack sprinklers shall not be required to be balanced to the ceiling sprinkler demand where additional face sprinklers are installed under each solid shelf at rack uprights and the in-rack sprinklers are calculated to discharge at least 60 gpm (227 L/min) from eight sprinklers.

17.1.6 Open-Top Containers. The protection of open-top containers is outside the scope of Chapter 17. *(See Section C.12.)*

17.1.7 In-Rack Sprinklers.

17.1.7.1 The number of sprinklers and the pipe sizing on a line of sprinklers in racks shall be restricted only by hydraulic calculations and not by any piping schedule.

17.1.7.2 When in-rack sprinklers are necessary to protect a higher hazard commodity that occupies only a portion of the length of a rack, in-rack sprinklers shall be extended a minimum of 8 ft (2.4 m) or one bay, whichever is greater, in each direction along the rack on either side of the higher hazard.

17.1.7.2.1 The in-rack sprinklers protecting the higher hazard shall not be required to be extended across the aisle.

17.1.7.3 Where a storage rack, due to its length, requires less than the number of in-rack sprinklers specified, only those in-rack sprinklers in a single rack need to be included in the calculation.

17.1.7.4* In-rack sprinklers shall be located at an intersection of transverse and longitudinal flues while not exceeding the maximum spacing rules.

17.1.7.4.1 Where distances between transverse flues exceed the maximum allowable distances, sprinklers shall be installed at the intersection of the transverse and longitudinal flues, and additional sprinklers shall be installed between transverse flues to meet the maximum distance rules.

17.1.7.4.2 Where no transverse flues exist, in-rack sprinklers shall not exceed the maximum spacing rules.

17.1.8* Horizontal Barriers and In-Rack Sprinklers.

17.1.8.1 Horizontal barriers used in conjunction with in-rack sprinklers to impede vertical fire development shall be constructed of sheet metal, wood, or similar material and shall extend the full length and depth of the rack.

17.1.8.2 Barriers shall be fitted within 2 in. (51 mm) horizontally around rack uprights.

17.1.9 Flue Space Requirements for Storage Up to and Including 25 ft (7.6 m). See Section C.13.

17.1.9.1 In double- and multiple-row racks without solid shelves, a longitudinal (back-to-back clearance between loads) flue space shall not be required.

17.1.9.2 Nominal 6 in. (152 mm) transverse flue spaces between loads and at rack uprights shall be maintained in single-, double-, and multiple-row racks.

17.1.9.3 Random variations in the width of flue spaces or in their vertical alignment shall be permitted.

17.1.10 Flue Space Requirements for Storage Over 25 ft (7.6 m).

17.1.10.1 Nominal 6 in. (152 mm) longitudinal flue spaces shall be provided in double-row racks.

17.1.10.1.1 Nominal 6 in. (152 mm) transverse flue spaces between loads and at rack uprights shall be maintained in single-, double-, and multiple-row racks.

17.1.10.1.2 Random variations in the width of the flue spaces or in their vertical alignment shall be permitted.

17.1.10.2 In single-, double-, or multiple-row racks, a minimum 6 in. (152 mm) vertical clear space shall be maintained between the in-rack sprinkler deflectors and the top of a tier of storage.

17.1.10.2.1 Face sprinklers in such racks shall be located within the rack a minimum of 3 in. (76 mm) from rack uprights and no more than 18 in. (460 mm) from the aisle face of storage.

17.1.10.2.2 Longitudinal flue in-rack sprinklers shall be located at the intersection with the transverse flue space and with the deflector located at or below the bottom of horizontal load beams or above or below other adjacent horizontal rack members.

17.1.10.2.3 Such in-rack sprinklers shall be a minimum of 3 in. (76 mm) radially from the side of the rack uprights.

17.2 Protection Criteria for Rack Storage of Plastics Commodities Stored Up to and Including 25 ft (7.6 m) in Height.

17.2.1 Control Mode Density/Area Sprinkler Protection Criteria for Single-, Double-, and Multiple-Row Racks for Plastics Commodities Stored Up to and Including 25 ft (7.6 m) in Height, with a Clearance to Ceiling Up to and Including 10 ft (3.1 m).

17.2.1.1* Storage 5 ft (1.5 m) or Less in Height. For the storage of Group A plastics stored 5 ft (1.5 m) or less in height, the sprinkler design criteria for miscellaneous storage specified in Chapter 13 shall be used.

17.2.1.2 Ceiling Sprinkler Water Demand. See Section C.22.

17.2.1.2.1 For Group A plastic commodities in cartons, encapsulated or nonencapsulated in single-, double-, and multiple-row racks, ceiling sprinkler water demand in terms of density [gpm/ft^2 (mm/min)] and area of operation [ft^2 (m^2)] shall be selected from Figure 17.2.1.2.1(a) through Figure 17.2.1.2.1(f).

17.2.1.2.2 Linear interpolation of design densities and areas of application shall be permitted between storage heights with the same clearance to ceiling.

17.2.1.2.3 No interpolation between clearance to ceiling shall be permitted.

17.2.1.2.4* An option shall be selected from the appropriate Figure 17.2.1.2.1(a) through Figure 17.2.1.2.1(f) given the storage height and clearance being protected. The density/area criteria at the top of each option shall be applied to the ceiling sprinklers and the in-rack sprinklers shown in the option (if any) shall be provided. Options that do not show multiple-row racks in the figures shall not be permitted to protect multiple-row rack storage. Notes in each figure shall be permitted to clarify options or to present additional options not shown in the figures.

Copyright 2014 National Fire Protection Association (NFPA). Licensed, by agreement, for individual use and download on October 4, 2014 to LEADER and READER for designated user PATTARAPORN SRITRAKOOL. No other reproduction or transmission in any form permitted without written permission of NFPA. For inquires or to report unauthorized use, contact licensing@nfpa.org.

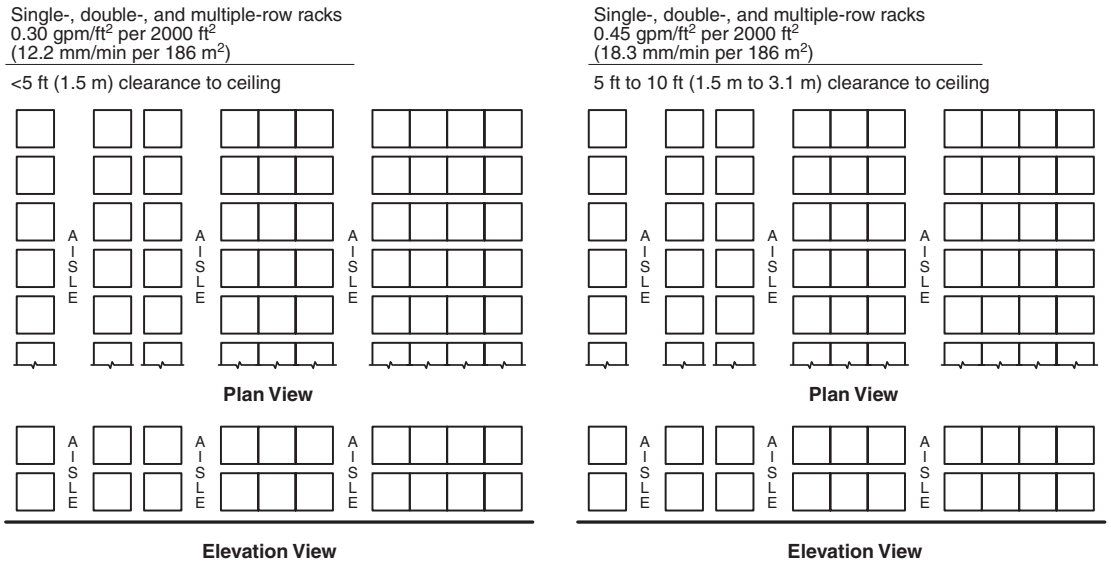

Note: Each square represents a storage cube measuring 4 ft to 5 ft (1.2 m to 1.5 m) on a side. Actual load heights can vary from approximately 18 in. (0.5 m) up to 10 ft (3.1 m). Therefore, there could be as few as one load or as many as six or seven loads between in-rack sprinklers that are spaced 10 ft (3.1 m) apart vertically.

FIGURE 17.2.1.2.1(a) Storage 5 ft to 10 ft (1.5 m to 3.1 m) in Height with Up to 10 ft (3.1 m) Clearance to Ceiling.

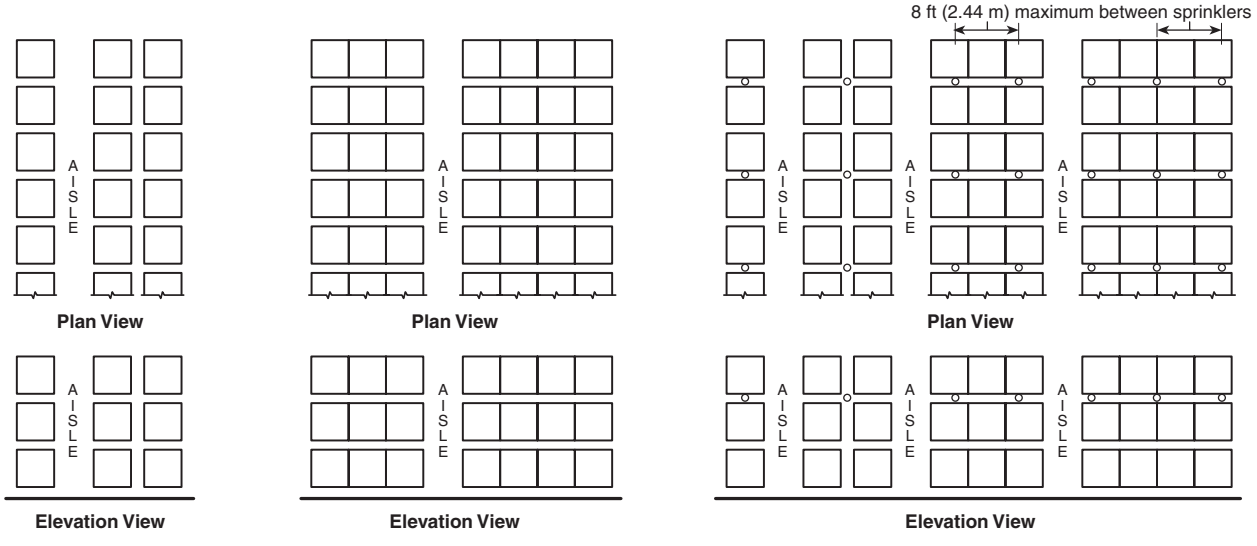

Notes:

1. Single level of in-rack sprinklers [½ in. or 17⁄32 in. (12.7 mm or 13.5 mm) operating at 15 psi (1.03 bar) minimum] installed as indicated in the transverse flue spaces.
2. Where sprinklers listed for storage use are installed at the ceiling only and the ceiling height in the protected area does not exceed 22 ft (6.7 m) and a minimum clearance of 5 ft (1.5 m) and the storage height does not exceed 15 ft (4.6 m), the ceiling sprinkler discharge criteria shall be permitted to be reduced to 0.45 gpm/ft² per 2000 ft² (18.3 mm/min per 186 m²).
3. Each square represents a storage cube measuring 4 ft to 5 ft (1.2 m to 1.5 m) on a side. Actual load heights can vary from approximately 18 in. (0.5 m) up to 10 ft (3.1 m). Therefore, there could be as few as one load or as many as six or seven loads between in-rack sprinklers that are spaced 10 ft (3.1 m) apart vertically.

FIGURE 17.2.1.2.1(b) Storage 15 ft (4.6 m) in Height with Up to 10 ft (3.1 m) Clearance to Ceiling.

Copyright 2014 National Fire Protection Association (NFPA). Licensed, by agreement, for individual use and download on October 4, 2014 to LEADER and READER for designated user PATTARAPORN SRITRAKOOL. No other reproduction or transmission in any form permitted without written permission of NFPA. For inquires or to report unauthorized use, contact licensing@nfpa.org.

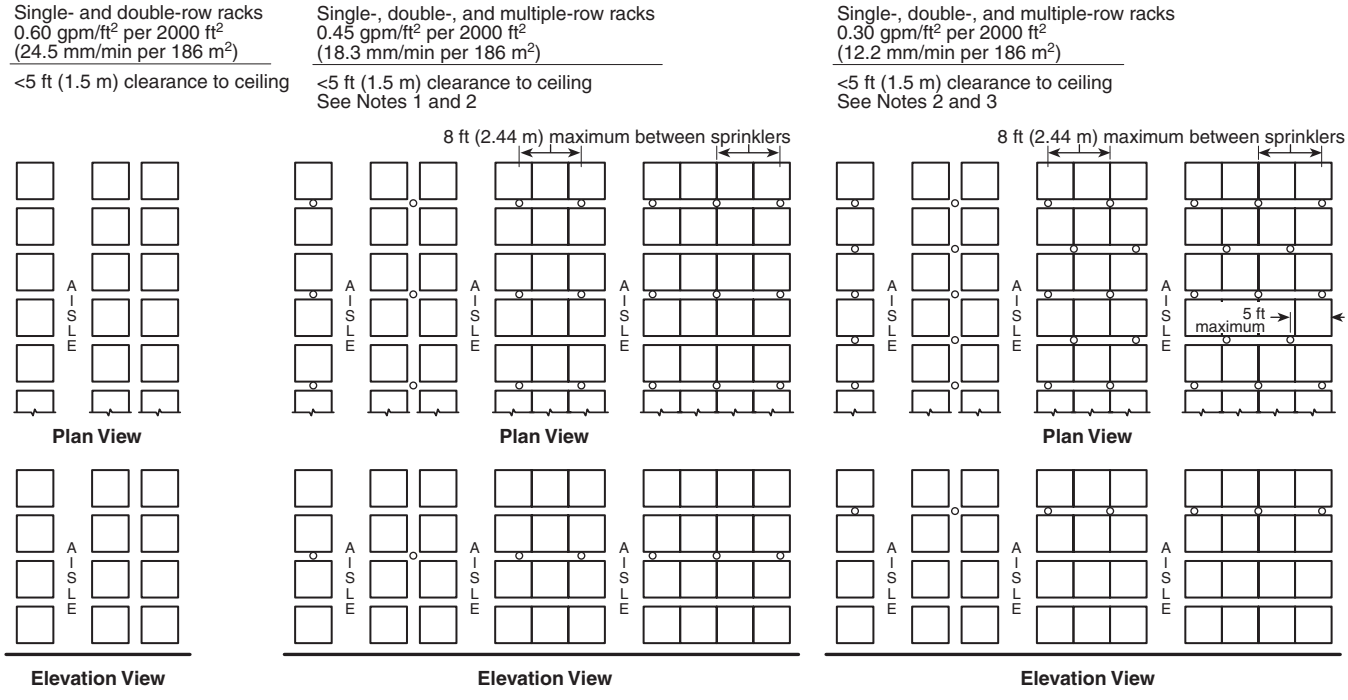

Notes:

1. Single level of in-rack sprinklers [½ in. or 17⁄32 in. (12.7 mm or 13.5 mm) operating at 15 psi (1.03 bar) minimum] installed as indicated in the transverse flue spaces.
2. Ceiling-only protection is not permitted for this storage configuration except where K-11.2 or larger spray sprinklers listed for storage use are installed. In-rack sprinklers are not required, provided the ceiling sprinkler discharge criterion is increased to 0.6 gpm/ft² (24 mm/min) over 2000 ft² (186 m²).
3. Single level of in-rack sprinklers [17⁄32 in. (13.5 mm) operating at 15 psi (1.03 bar) minimum or ½ in. (12.7 mm) operating at 30 psi (2.07 bar) minimum] installed on 4 ft to 5 ft (1.2 m to 1.5 m) spacings located, as indicated, in the longitudinal flue space at the intersection of every transverse flue space.
4. Each square represents a storage cube measuring 4 ft to 5 ft (1.2 m to 1.5 m) on a side. Actual load heights can vary from approximately 18 in. (0.5 m) up to 10 ft (3.1 m). Therefore, there could be as few as one load or as many as six or seven loads between in-rack sprinklers that are spaced 10 ft (3.1 m) apart vertically.

FIGURE 17.2.1.2.1(c) Storage 20 ft (6.1 m) in Height with <5 ft (1.5 m) Clearance to Ceiling.

Copyright 2014 National Fire Protection Association (NFPA). Licensed, by agreement, for individual use and download on October 4, 2014 to LEADER and READER for designated user PATTARAPORN SRITRAKOOL. No other reproduction or transmission in any form permitted without written permission of NFPA. For inquires or to report unauthorized use, contact licensing@nfpa.org.

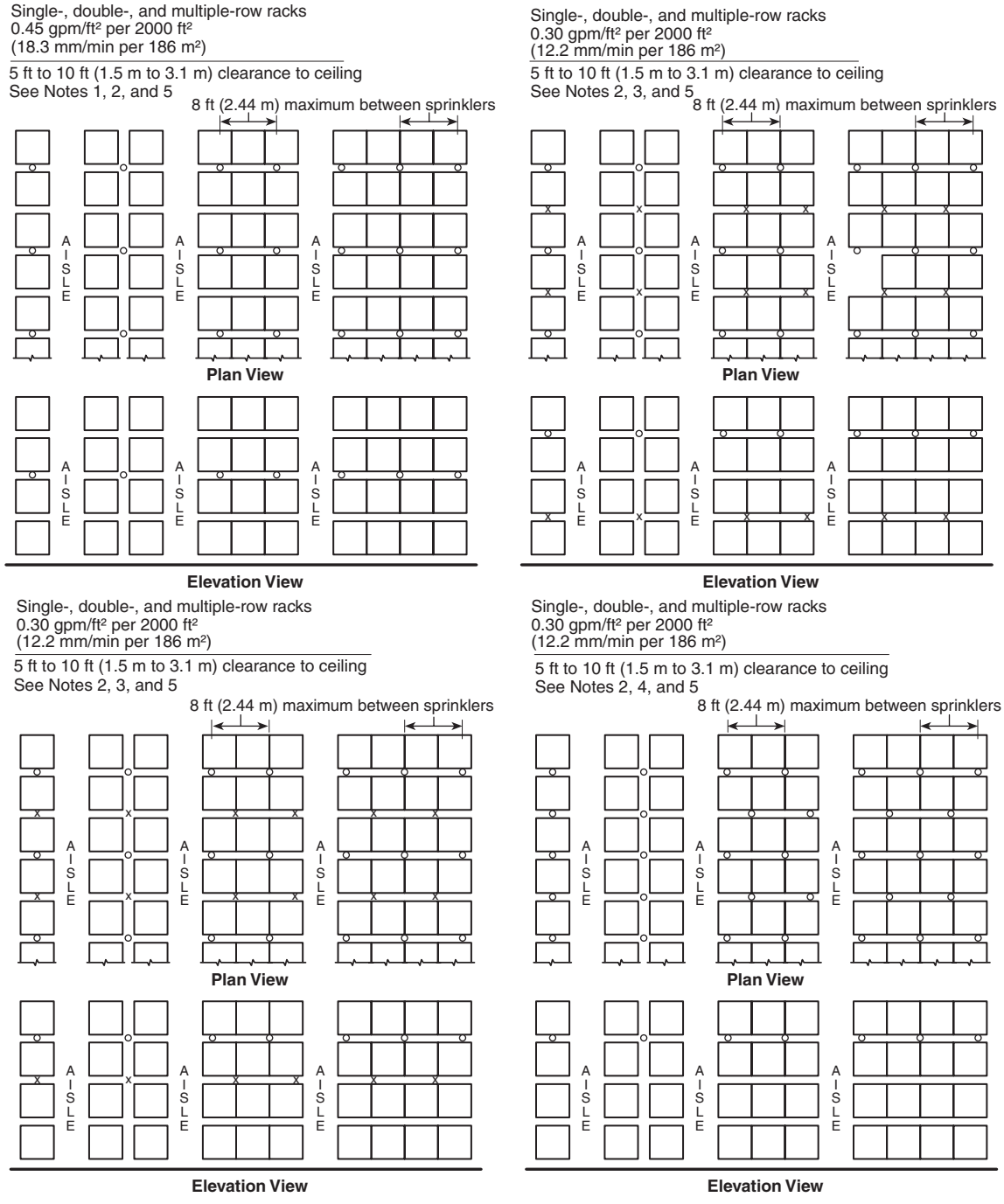

Notes:
1. Single level of in-rack sprinklers [½ in. or 17⁄32 in. (12.7 mm or 13.5 mm) operating at 15 psi (1.03 bar) minimum] installed as indicated in the transverse flue spaces.
2. Ceiling-only protection shall not be permitted for this storage configuration except where K-11.2 or larger orifice spray sprinklers listed for storage use are installed. In-rack sprinklers shall not be required, provided the ceiling sprinkler discharge criterion is increased to 0.6 gpm/ft² (24 mm/min) over 2000 ft² (186 m²) and the ceiling height in the protected area does not exceed 27 ft (8.2 m).
3. Two levels of in-rack sprinklers [½ in. or 17⁄32 in. (12.7 mm or 13.5 mm) operating at 15 psi (1.03 bar) minimum] installed as indicated and staggered in the transverse flue space.
4. Single level of in-rack sprinklers [17⁄32 in. (13.5 mm) operating at 15 psi (1.03 bar) or ½ in. (12.7 mm) operating at 30 psi (2.07 bar) minimum] installed on 4 ft to 5 ft (1.2 m to 1.5 m) spacings located, as indicated, in the longitudinal flue space at the intersection of every transverse flue space.
5. Each square represents a storage cube measuring 4 ft to 5 ft (1.2 m to 1.5 m) on a side. Actual load heights can vary from approximately 18 in. (0.5 m) up to 10 ft (3.1 m). Therefore, there could be as few as one load or as many as six or seven loads between in-rack sprinklers that are spaced 10 ft (3.1 m) apart vertically.

FIGURE 17.2.1.2.1(d) Storage 20 ft (6.1 m) in Height with 5 ft to 10 ft (1.5 m to 3.1 m) Clearance to Ceiling.

Copyright 2014 National Fire Protection Association (NFPA). Licensed, by agreement, for individual use and download on October 4, 2014 to LEADER and READER for designated user PATTARAPORN SRITRAKOOL. No other reproduction or transmission in any form permitted without written permission of NFPA. For inquires or to report unauthorized use, contact licensing@nfpa.org.

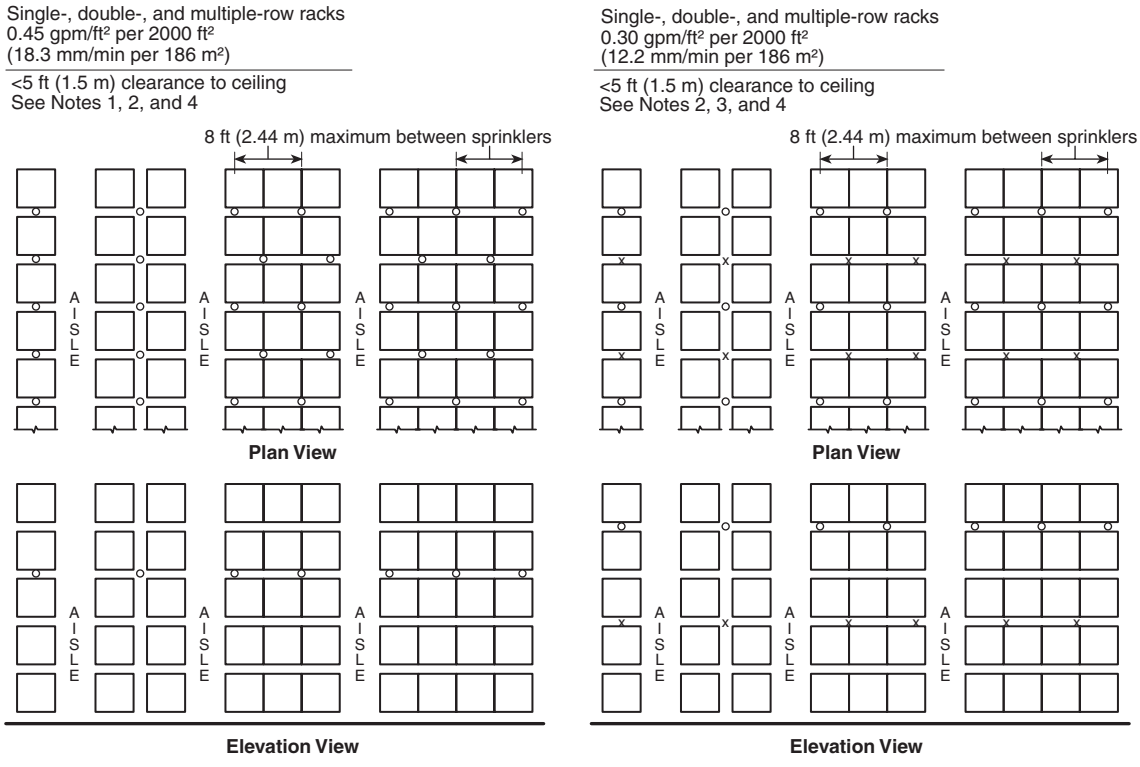

Notes:

1. Single level of in-rack sprinklers [17/32 in. (13.5 mm) operating at 15 psi (1.03 bar) minimum or ½ in. (12.7 mm) operating at 30 psi (2.07 bar) minimum] installed on 4 ft to 5 ft (1.2 m to 1.5 m) spacings located, as indicated, in the longitudinal flue space at the intersection of every transverse flue space.
2. Ceiling-only protection shall not be permitted for this storage configuration except where K-16.8 spray sprinklers listed for storage use are installed. In-rack sprinklers shall not be required, provided the ceiling sprinkler discharge criterion is increased to 0.8 gpm/ft² (32.6 mm/min) over 2000 ft² (186 m²) for wet systems and 4500 ft² (418 m²) for dry systems and the ceiling height in the protected area does not exceed 30 ft (9.1 m).
3. Two levels of in-rack sprinklers [½ in. or 17/32 in. (12.7 mm or 13.5 mm) operating at 15 psi (1.03 bar) minimum] installed as indicated and staggered in the transverse flue space.
4. Each square represents a storage cube measuring 4 ft to 5 ft (1.2 m to 1.5 m) on a side. Actual load heights can vary from approximately 18 in. (0.5 m) up to 10 ft (3.1 m). Therefore, there could be as few as one load or as many as six or seven loads between in-rack sprinklers that are spaced 10 ft (3.1 m) apart vertically.

FIGURE 17.2.1.2.1(e) Storage 25 ft (7.6 m) in Height with <5 ft (1.5 m) Clearance to Ceiling. *(See Note 2.)*

Copyright 2014 National Fire Protection Association (NFPA). Licensed, by agreement, for individual use and download on October 4, 2014 to LEADER and READER for designated user PATTARAPORN SRITRAKOOL. No other reproduction or transmission in any form permitted without written permission of NFPA. For inquires or to report unauthorized use, contact licensing@nfpa.org.

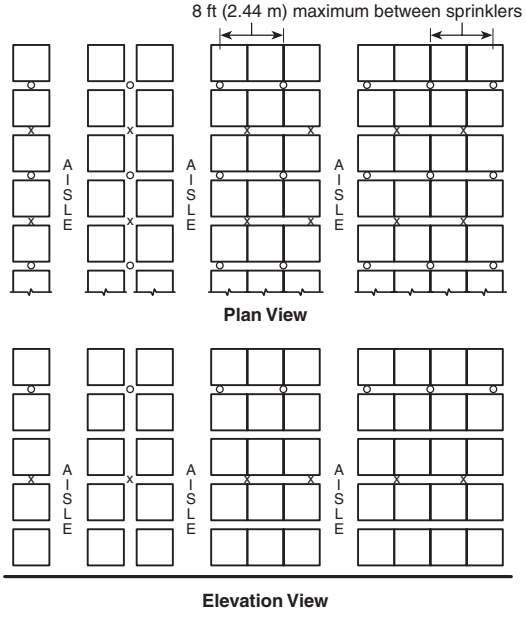

Notes:

1. Two levels of in-rack sprinklers [½ in. or 17/32 in. (12.7 mm or 13.5 mm) operating at 15 psi (1.03 bar) minimum] installed on 8 ft to 10 ft (2.4 m to 3.1 m) spacings located as indicated and staggered in the transverse flue space.
2. Ceiling-only protection shall not be permitted for this storage configuration except where K-16.8 spray sprinklers listed for storage use are installed. In-rack sprinklers shall not be required, provided the ceiling sprinkler discharge criterion is increased to 0.8 gpm/ft² (32.6 mm/min) over 2000 ft² (186 m²) for wet systems and 4500 ft² (418 m²) for dry systems and the ceiling height in the protected area does not exceed 30 ft (9.1 m).
3. Each square represents a storage cube measuring 4 ft to 5 ft (1.2 m to 1.5 m) on a side. Actual load heights can vary from approximately 18 in. (0.5 m) up to 10 ft (3.1 m). Therefore, there could be as few as one load or as many as six or seven loads between in-rack sprinklers that are spaced 10 ft (3.1 m) apart vertically.

FIGURE 17.2.1.2.1(f) Storage 25 ft (7.6 m) in Height with 5 ft to 10 ft (1.5 m to 3.1 m) Clearance to Ceiling. *(See Note 2.)*

17.2.1.3 For storage of Group A plastics between 5 ft and 12 ft (1.5 m and 3.7 m) in height, the installation requirements for extra hazard systems shall apply.

17.2.1.4* Exposed unexpanded Group A plastics protected with control mode density/area sprinklers shall be protected in accordance with one of the following:

(1) Maximum 10 ft (3 m) storage in a maximum 20 ft (6.1 m) high building with ceiling sprinklers designed for a minimum 0.8 gpm/ft² (32.6 mm/min) density over 2500 ft² (232 m²) and no in-rack sprinklers required as shown in Figure 17.2.1.4(a)

(2) Maximum 10 ft (3 m) storage in a maximum 20 ft (6.1 m) high building with ceiling sprinklers designed for a minimum 0.45 gpm/ft² (18.3 mm/min) density over 2000 ft² (186 m²) and one level of in-rack sprinklers required at alternate transverse flues as shown in Figure 17.2.1.4(b)

(3) Maximum 10 ft storage in a maximum 20 ft high building with ceiling sprinklers designed for a minimum 0.3 gpm/ft² density over 2000 ft² and one level of in-rack sprinklers required in every transverse flue as shown in Figure 17.2.1.4(c)

(4) Maximum 15 ft storage in a maximum 25 ft high building with ceiling sprinklers designed for a minimum 0.45 gpm/ft² density over 2000 ft² and one level of in-rack sprinklers required at alternate transverse flues as shown in Figure 17.2.1.4(d)

(5) Maximum 15 ft storage in a maximum 25 ft high building with ceiling sprinklers designed for a minimum 0.3 gpm/ft² density over 2000 ft² and one level of in-rack sprinklers required in every transverse flue as shown in Figure 17.2.1.4(e)

(6) Maximum 20 ft storage in a maximum 25 ft high building with ceiling sprinklers designed for a minimum 0.6 gpm/ft² density over 2000 ft² and one level of in-rack sprinklers required at alternate transverse flues as shown in Figure 17.2.1.4(f)

(7) Maximum 20 ft storage in a maximum 25 ft high building with ceiling sprinklers designed for a minimum 0.45 gpm/ft² density over 2000 ft² and one level of in-rack sprinklers required in every transverse flue as shown in Figure 17.2.1.4(g)

(8) Maximum 20 ft storage in a maximum 30 ft high building with ceiling sprinklers designed for a minimum 0.8 gpm/ft² density over 1500 ft² and one level of in-rack sprinklers required at alternate transverse flues as shown in Figure 17.2.1.4(h)

(9) Maximum 20 ft storage in a maximum 30 ft high building with ceiling sprinklers designed for a minimum 0.6 gpm/ft² density over 1500 ft² and one level of in-rack sprinklers required in every transverse flue as shown in Figure 17.2.1.4(i)

(10) Maximum 20 ft storage in a maximum 30 ft high building with ceiling sprinklers designed for a minimum 0.3 gpm/ft² density over 2000 ft² and two levels of in-rack sprinklers required in every transverse flue as shown in Figure 17.2.1.4(j)

(11) Maximum 25 ft storage in a maximum 35 ft high building with ceiling sprinklers designed for a minimum 0.8 gpm/ft² density over 1500 ft² and one level of in-rack sprinklers required in every transverse flue as shown in Figure 17.2.1.4(k)

(12) Maximum 25 ft storage in a maximum 35 ft high building with ceiling sprinklers designed for a minimum 0.3 gpm/ft² density over 2000 ft² and two levels of in-rack sprinklers required in every transverse flue as shown in Figure 17.2.1.4(l)

Copyright 2014 National Fire Protection Association (NFPA). Licensed, by agreement, for individual use and download on October 4, 2014 to LEADER and READER for designated user PATTARAPORN SRITRAKOOL. No other reproduction or transmission in any form permitted without written permission of NFPA. For inquires or to report unauthorized use, contact licensing@nfpa.org.

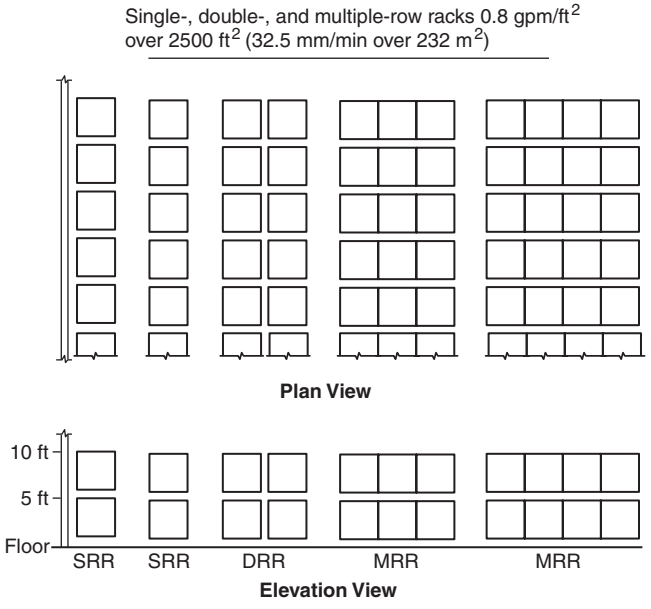

Note: Each square represents a storage cube measuring 4 ft to 5 ft (1.2 m to 1.5 m) on a side. Actual load heights can vary from approximately 18 in. to 10 ft (0.5 m to 3.1 m). Therefore, there could be as few as one load or as many as six or seven loads between in-rack sprinklers that are spaced 10 ft (3.1 m) apart vertically.

FIGURE 17.2.1.4(a) Exposed Nonexpanded Plastics up to 10 ft in Height in up to a 20 ft High Building with No In-Rack Sprinklers.

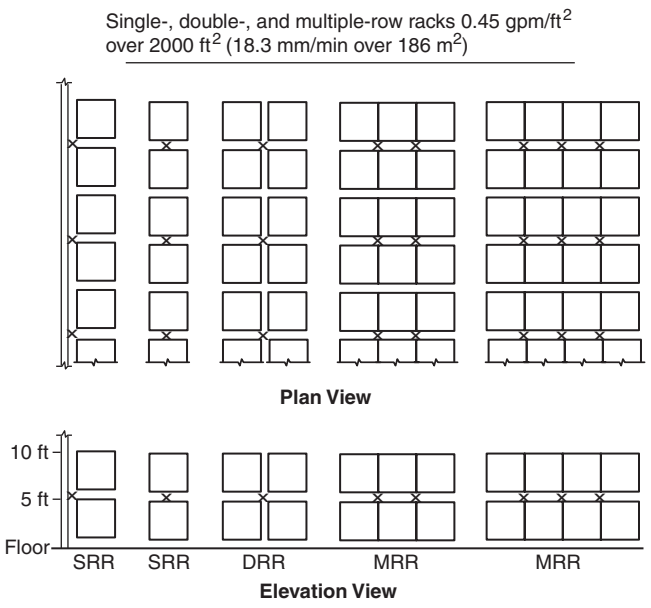

Note: Each square represents a storage cube measuring 4 ft to 5 ft (1.2 m to 1.5 m) on a side. Actual load heights can vary from approximately 18 in. to 10 ft (0.5 m to 3.1 m). Therefore, there could be as few as one load or as many as six or seven loads between in-rack sprinklers that are spaced 10 ft (3.1 m) apart vertically.

FIGURE 17.2.1.4(b) Exposed Nonexpanded Plastics up to 10 ft in Height in up to a 20 ft High Building with One Level of In-Rack Sprinklers.

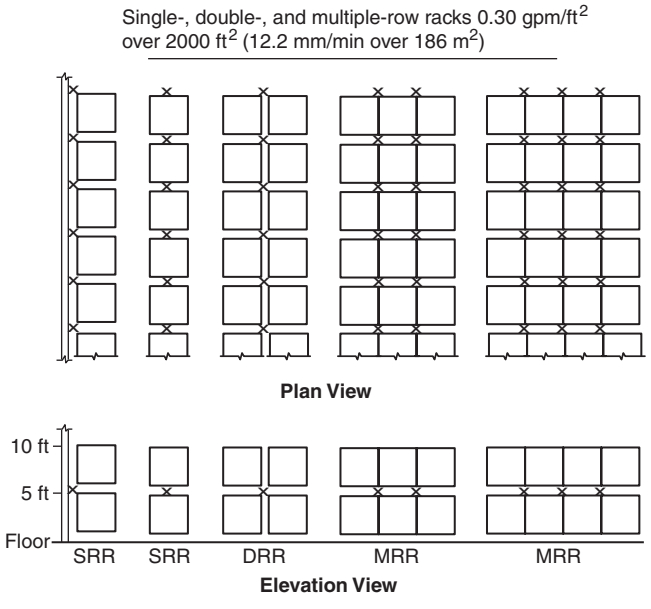

Note: Each square represents a storage cube measuring 4 ft to 5 ft (1.2 m to 1.5 m) on a side. Actual load heights can vary from approximately 18 in. to 10 ft (0.5 m to 3.1 m). Therefore, there could be as few as one load or as many as six or seven loads between in-rack sprinklers that are spaced 10 ft (3.1 m) apart vertically.

FIGURE 17.2.1.4(c) Exposed Nonexpanded Plastics up to 10 ft in Height in up to a 20 ft High Building with One Level of Closely Spaced In-Rack Sprinklers.

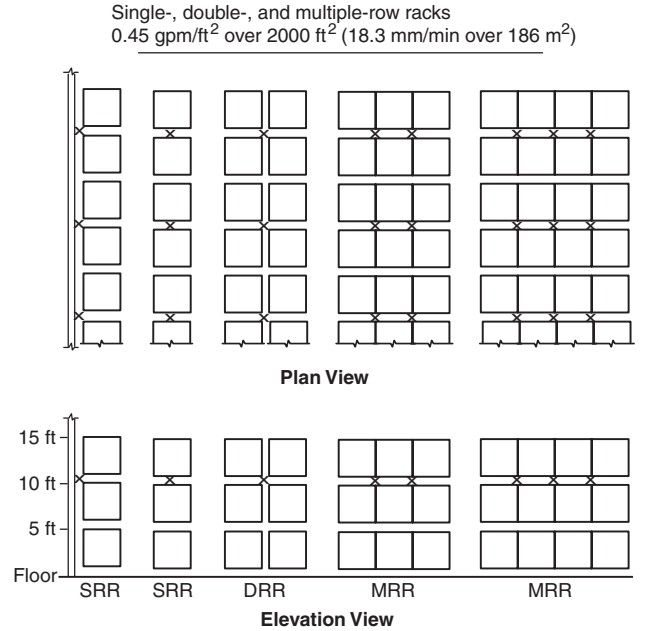

Note: Each square represents a storage cube measuring 4 ft to 5 ft (1.2 m to 1.5 m) on a side. Actual load heights can vary from approximately 18 in. to 10 ft (0.5 m to 3.1 m). Therefore, there could be as few as one load or as many as six or seven loads between in-rack sprinklers that are spaced 10 ft (3.1 m) apart vertically.

FIGURE 17.2.1.4(d) Exposed Nonexpanded Plastics up to 15 ft in Height in up to a 25 ft High Building with One Level of In-Rack Sprinklers.

Copyright 2014 National Fire Protection Association (NFPA). Licensed, by agreement, for individual use and download on October 4, 2014 to LEADER and READER for designated user PATTARAPORN SRITRAKOOL. No other reproduction or transmission in any form permitted without written permission of NFPA. For inquires or to report unauthorized use, contact licensing@nfpa.org.

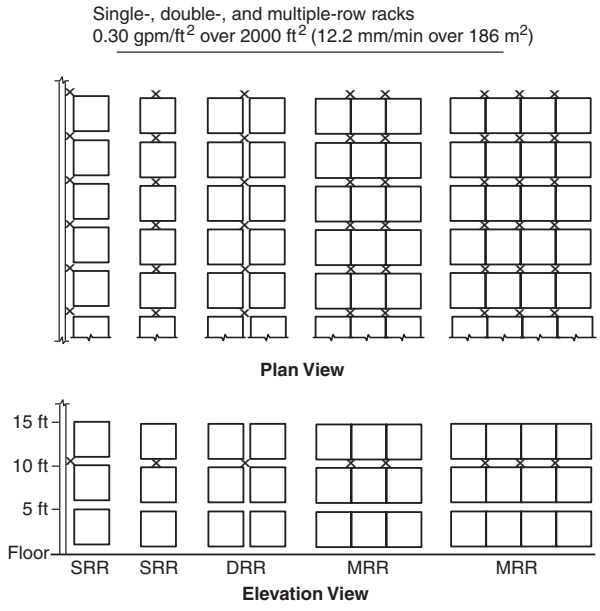

Note: Each square represents a storage cube measuring 4 ft to 5 ft (1.2 m to 1.5 m) on a side. Actual load heights can vary from approximately 18 in. to 10 ft (0.5 m to 3.1 m). Therefore, there could be as few as one load or as many as six or seven loads between in-rack sprinklers that are spaced 10 ft (3.1 m) apart vertically.

FIGURE 17.2.1.4(e) Exposed Nonexpanded Plastics up to 15 ft in Height in up to a 25 ft High Building with One Level of Closely Spaced In-Rack Sprinklers.

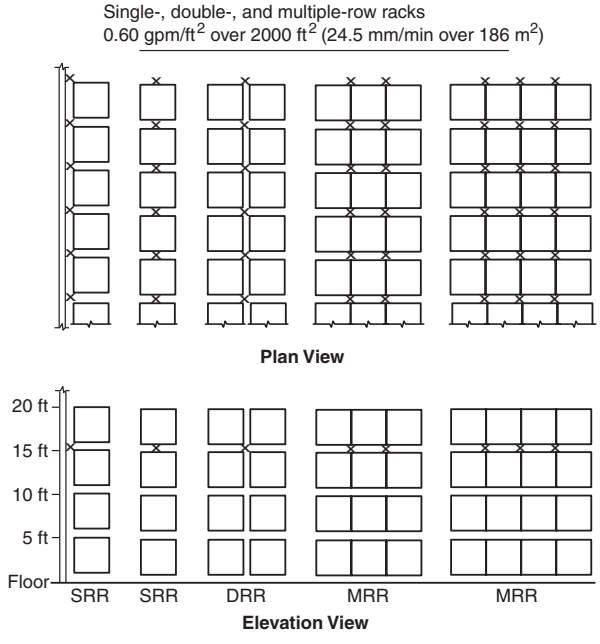

Note: Each square represents a storage cube measuring 4 ft to 5 ft (1.2 m to 1.5 m) on a side. Actual load heights can vary from approximately 18 in. to 10 ft (0.5 m to 3.1 m). Therefore, there could be as few as one load or as many as six or seven loads between in-rack sprinklers that are spaced 10 ft (3.1 m) apart vertically.

FIGURE 17.2.1.4(f) Exposed Nonexpanded Plastics up to 20 ft in Height in up to a 25 ft High Building with One Level of In-Rack Sprinklers.

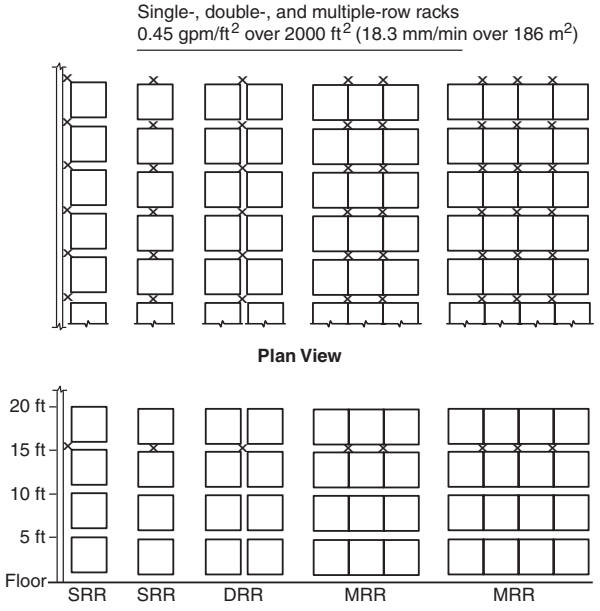

Note: Each square represents a storage cube measuring 4 ft to 5 ft (1.2 m to 1.5 m) on a side. Actual load heights can vary from approximately 18 in. to 10 ft (0.5 m to 3.1 m). Therefore, there could be as few as one load or as many as six or seven loads between in-rack sprinklers that are spaced 10 ft (3.1 m) apart vertically.

FIGURE 17.2.1.4(g) Exposed Nonexpanded Plastics up to 20 ft in Height in up to a 25 ft High Building with One Level of Closely Spaced In-Rack Sprinklers.

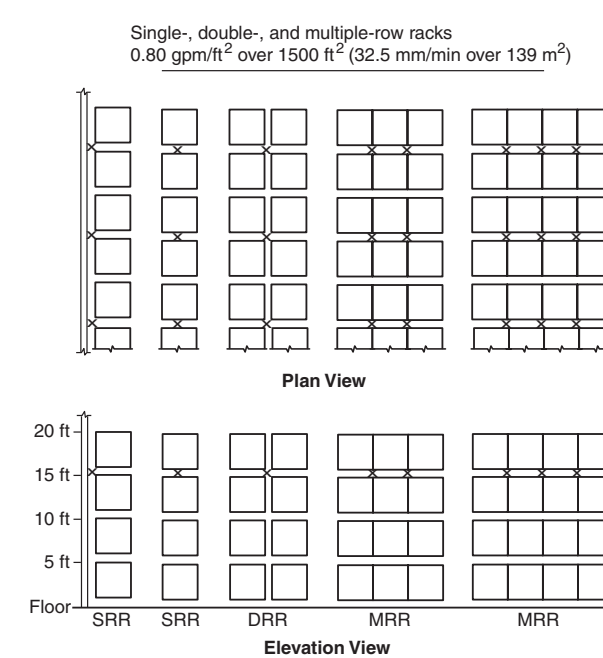

Note: Each square represents a storage cube measuring 4 ft to 5 ft (1.2 m to 1.5 m) on a side. Actual load heights can vary from approximately 18 in. to 10 ft (0.5 m to 3.1 m). Therefore, there could be as few as one load or as many as six or seven loads between in-rack sprinklers that are spaced 10 ft (3.1 m) apart vertically.

FIGURE 17.2.1.4(h) Exposed Nonexpanded Plastics up to 20 ft in Height in up to a 30 ft High Building with One Level of In-Rack Sprinklers.

Copyright 2014 National Fire Protection Association (NFPA). Licensed, by agreement, for individual use and download on October 4, 2014 to LEADER and READER for designated user PATTARAPORN SRITRAKOOL. No other reproduction or transmission in any form permitted without written permission of NFPA. For inquires or to report unauthorized use, contact licensing@nfpa.org.

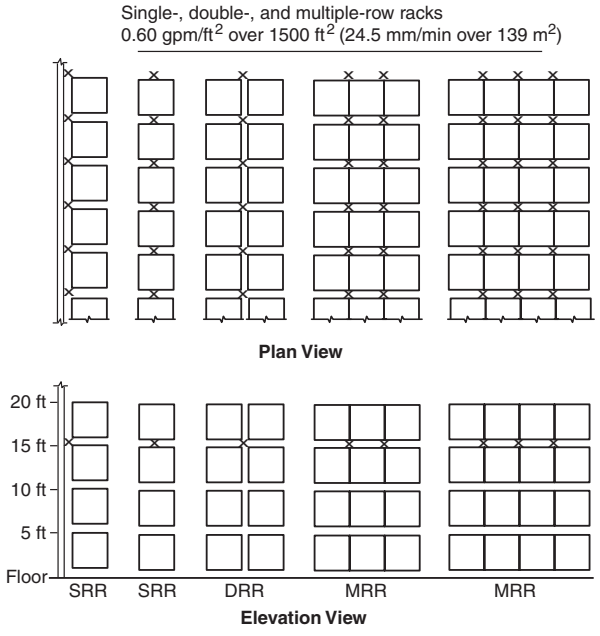

Note: Each square represents a storage cube measuring 4 ft to 5 ft (1.2 m to 1.5 m) on a side. Actual load heights can vary from approximately 18 in. to 10 ft (0.5 m to 3.1 m). Therefore, there could be as few as one load or as many as six or seven loads between in-rack sprinklers that are spaced 10 ft (3.1 m) apart vertically.

FIGURE 17.2.1.4(i) Exposed Nonexpanded Plastics up to 20 ft in Height in up to a 30 ft High Building with One Level of Closely Spaced In-Rack Sprinklers.

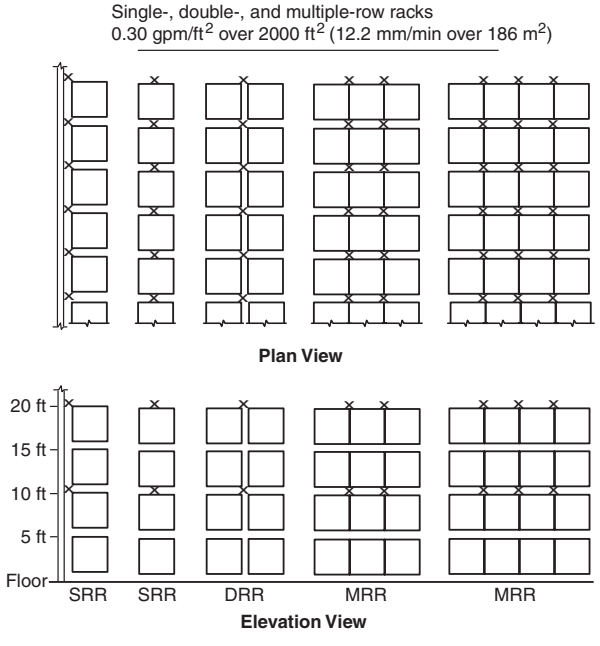

Note: Each square represents a storage cube measuring 4 ft to 5 ft (1.2 m to 1.5 m) on a side. Actual load heights can vary from approximately 18 in. to 10 ft (0.5 m to 3.1 m). Therefore, there could be as few as one load or as many as six or seven loads between in-rack sprinklers that are spaced 10 ft (3.1 m) apart vertically.

FIGURE 17.2.1.4(j) Exposed Nonexpanded Plastics up to 20 ft in Height in up to a 30 ft High Building with Two Levels of Closely Spaced In-Rack Sprinklers.

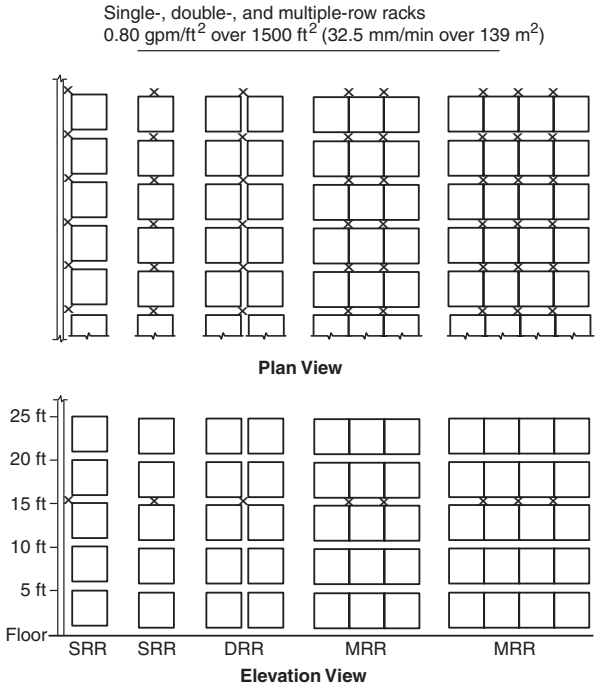

Note: Each square represents a storage cube measuring 4 ft to 5 ft (1.2 m to 1.5 m) on a side. Actual load heights can vary from approximately 18 in. to 10 ft (0.5 m to 3.1 m). Therefore, there could be as few as one load or as many as six or seven loads between in-rack sprinklers that are spaced 10 ft (3.1 m) apart vertically.

FIGURE 17.2.1.4(k) Exposed Nonexpanded Plastics up to 25 ft in Height in up to a 35 ft High Building with One Level of Closely Spaced In-Rack Sprinklers.

17.2.1.5 In-Rack Sprinkler Requirements Where Control Mode Density/Area Sprinklers Are Being Used at Ceiling.

17.2.1.5.1 In-Rack Sprinkler Clearance. The minimum of 6 in. (152 mm) vertical clear space shall be maintained between the sprinkler deflectors and the top of a tier of storage.

17.2.1.5.2 The spacing of in-rack sprinklers shall be in accordance with Figure 17.2.1.2.1(a) through Figure 17.2.1.2.1(f).

17.2.1.5.3* In-rack sprinklers shall be located at an intersection of transverse and longitudinal flues while not exceeding the maximum spacing rules.

17.2.1.5.4 Where distances between transverse flues exceed the maximum allowable distances, sprinklers shall be installed at the intersection of the transverse and longitudinal flues, and additional sprinklers shall be installed between transverse flues to meet the maximum distance rules.

17.2.1.5.5 Where no transverse flues exist, in-rack sprinklers shall not exceed the maximum spacing rules.

17.2.1.5.6 In-Rack Sprinkler Water Demand. The water demand for sprinklers installed in racks shall be based on simultaneous operation of the most hydraulically remote sprinklers as follows:

(1) Eight sprinklers where only one level is installed in racks
(2) Fourteen sprinklers (seven on each top two levels) where more than one level is installed in racks

Copyright 2014 National Fire Protection Association (NFPA). Licensed, by agreement, for individual use and download on October 4, 2014 to LEADER and READER for designated user PATTARAPORN SRITRAKOOL. No other reproduction or transmission in any form permitted without written permission of NFPA. For inquires or to report unauthorized use, contact licensing@nfpa.org.

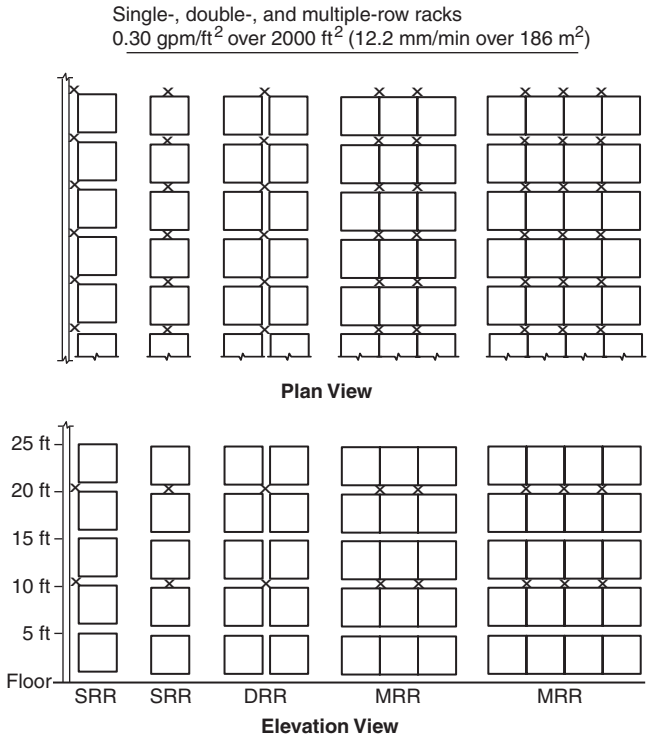

Note: Each square represents a storage cube measuring 4 ft to 5 ft (1.2 m to 1.5 m) on a side. Actual load heights can vary from approximately 18 in. to 10 ft (0.5 m to 3.1 m). Therefore, there could be as few as one load or as many as six or seven loads between in-rack sprinklers that are spaced 10 ft (3.1 m) apart vertically.

FIGURE 17.2.1.4(l) Exposed Nonexpanded Plastics up to 25 ft in Height in up to a 35 ft High Building with Two Levels of Closely Spaced In-Rack Sprinklers.

17.2.1.5.7 In-Rack Sprinkler Discharge Pressure. Sprinklers in racks shall discharge at not less than 15 psi (1 bar) for all classes of commodities. *(See Section C.19.)*

17.2.2 CMSA Sprinklers for Rack Storage of Plastics Commodities Stored Up to and Including 25 ft (7.6 m) in Height.

17.2.2.1 Protection of single-, double-, and multiple-row rack storage without solid shelves for unexpanded plastic commodities shall be in accordance with Table 17.2.2.1.

17.2.2.2 Protection shall be provided as specified in Table 17.2.2.1 or appropriate NFPA standards in terms of minimum operating pressure and the number of sprinklers to be included in the design area.

17.2.2.3 Open Wood Joist Construction.

17.2.2.3.1 Where CMSA sprinklers are installed under open wood joist construction, firestopping in accordance with 17.2.2.3.2 shall be provided or the minimum operating pressure of the sprinklers shall be 50 psi (3.4 bar) for a K-11.2 (160) sprinkler or 22 psi (1.5 bar) for a K-16.8 (240) sprinkler.

17.2.2.3.2 Where each joist channel of open wood joist construction is fully firestopped to its full depth at intervals not exceeding 20 ft (6.1 m), the lower pressures specified in Table 17.2.2.1 shall be permitted to be used.

17.2.2.4 Preaction Systems. For the purpose of using Table 17.2.2.1, preaction systems shall be classified as dry pipe systems.

17.2.2.5 Building steel shall not require special protection where Table 17.2.2.1 is applied as appropriate for the storage configuration.

17.2.2.6 In-Rack Sprinkler Requirements Where CMSA Sprinklers Are Used at Ceiling.

17.2.2.6.1 In-rack sprinklers shall be installed at the first tier level at or above one-half of the storage height.

17.2.2.6.2 The minimum of 6 in. (152 mm) vertical clear space shall be maintained between the sprinkler deflectors and the top of a tier of storage.

17.2.2.6.3* In-rack sprinklers shall be located at an intersection of transverse and longitudinal flues.

17.2.2.6.4 The maximum horizontal distance between in-rack sprinklers shall be 5 ft (1.5 m).

17.2.2.6.5 Where distances between transverse flues exceed the maximum allowable distances, sprinklers shall be installed at the intersection of the transverse and longitudinal flues, and additional sprinklers shall be installed between transverse flues to meet the maximum distance rules.

17.2.2.6.6 Where no transverse flues exist, in-rack sprinklers shall not exceed the maximum spacing rules.

17.2.2.6.7 In-Rack Sprinkler Water Demand. The water demand for sprinklers installed in racks shall be based on simultaneous operation of the most hydraulically remote eight sprinklers.

17.2.2.6.8 In-Rack Sprinkler Discharge Pressure. Sprinklers in racks shall discharge at not less than 15 psi (1 bar) for all classes of commodities. *(See Section C.19.)*

17.2.3* Early Suppression Fast-Response (ESFR) Sprinklers for Rack Storage of Plastics Commodities Stored Up to and Including 25 ft (7.6 m) in Height.

17.2.3.1 Protection of single-, double-, and multiple-row rack storage of cartoned or exposed nonexpanded plastic and cartoned expanded plastic shall be in accordance with Table 17.2.3.1.

Copyright 2014 National Fire Protection Association (NFPA). Licensed, by agreement, for individual use and download on October 4, 2014 to LEADER and READER for designated user PATTARAPORN SRITRAKOOL. No other reproduction or transmission in any form permitted without written permission of NFPA. For inquires or to report unauthorized use, contact licensing@nfpa.org.

Table 17.2.2.1 CMSA Sprinkler Design Criteria for Single-, Double-, and Multiple-Row Racks Without Solid Shelves of Plastics Commodities Stored Up and Including 25 ft (7.6 m) in Height

Storage Arrangement	Commodity Class	Maximum Storage Height		Maximum Ceiling/Roof Height		K-Factor/ Orientation	Type of System	Number of Design Sprinklers	Minimum Operating Pressure	
		ft	m	ft	m				psi	bar
Single-, double-, and multiple-row racks without solid shelves (no open-top containers)	Cartoned nonexpanded plastics	20	6.1	25	7.6	11.2 (160) Upright	Wet	15	50	3.5
						16.8 (240) Upright	Wet	15	22	1.5
						19.6 (280) Pendent	Wet	15	16	1.1
				30	9.1	11.2 (160) Upright	Wet	30	50	3.5
							Wet	20	75	5.2
						16.8 (240) Upright	Wet	15*	22	1.5
						19.6 (280) Pendent	Wet	15	16	1.1
		25	7.6	30	9.1	11.2 (160) Upright	Wet	15 + 1 level of in-rack	50	3.5
						16.8 (240) Upright	Wet	15*	22	1.5
						19.6 (280) Pendent	Wet	15	16	1.1
		25	7.6	35	10.6	11.2 (160) Upright	Wet	30 + 1 level of in-rack	50	3.5
							Wet	20 + 1 level of in-rack	75	5.2
						16.8 (240) Upright	Wet	30 + 1 level of in-rack	22	1.5
							Wet	20 + 1 level of in-rack	35	2.4
						19.6 (280) Pendent	Wet	15	25	1.7
	Exposed nonexpanded plastics	20	6.1	25	7.6	11.2 (160) Upright	Wet	15	50	3.5
						16.8 (240) Upright	Wet	15	22	1.5
		20	6.1	30	9.1	11.2 (160) Upright	Wet	30	50	3.5
							Wet	20	75	5.2
						16.8 (240) Upright	Wet	15*	22	1.5
		25	7.6	30	9.1	11.2 (160) Upright	Wet	15 + 1 level of in-rack	50	3.5
						16.8 (240) Upright	Wet	15*	22	1.5
		25	7.6	35	10.6	11.2 (160) Upright	Wet	30 + 1 level of in-rack	50	3.5
							Wet	20 + 1 level of in-rack	75	5.2
						16.8 (240) Upright	Wet	30 + 1 level of in-rack	22	1.5
							Wet	20 + 1 level of in-rack	35	2.4

*Minimum 8 ft (2.4 m) aisle.

Copyright 2014 National Fire Protection Association (NFPA). Licensed, by agreement, for individual use and download on October 4, 2014 to LEADER and READER for designated user PATTARAPORN SRITRAKOOL. No other reproduction or transmission in any form permitted without written permission of NFPA. For inquires or to report unauthorized use, contact licensing@nfpa.org.

Table 17.2.3.1 ESFR Protection of Rack Storage Without Solid Shelves of Plastics Commodities Stored Up to and Including 25 ft (7.6 m) in Height

Storage Arrangement	Commodity	Maximum Storage Height		Maximum Ceiling/Roof Height		Nominal K-Factor	Orientation	Minimum Operating Pressure		In-Rack Sprinkler Requirements
		ft	m	ft	m			psi	bar	
Single-, double-, and multiple-row racks (no open-top containers)	Cartoned nonexpanded	20	6.1	25	7.6	14.0 (200)	Upright/ pendent	50	3.4	No
						16.8 (240)	Upright/ pendent	35	2.4	No
						22.4 (320)	Pendent	25	1.7	No
						25.2 (360)	Pendent	15	1.0	No
				30	9.1	14.0 (200)	Upright/ pendent	50	3.4	No
						16.8 (240)	Upright/ pendent	35	2.4	No
						22.4 (320)	Pendent	25	1.7	No
						25.2 (360)	Pendent	15	1.0	No
				35	10.7	14.0 (200)	Upright/ pendent	75	5.2	No
						16.8 (240)	Upright/ pendent	52	3.6	No
						22.4 (320)	Pendent	35	2.4	No
						25.2 (360)	Pendent	20	1.4	No
				40	12.2	16.8 (240)	Pendent	52	3.6	No
						22.4 (320)	Pendent	40	2.8	No
						25.2 (360)	Pendent	25	1.7	No
				45	13.7	14.0 (200)	Pendent	90	6.2	Yes
						16.8 (240)	Pendent	63	4.3	Yes
						22.4 (320)	Pendent	40	2.8	No
						25.2 (360)	Pendent	40	2.8	No
		25	7.6	30	9.1	14.0 (200)	Upright/pendent	50	3.4	No
						16.8 (240)	Upright/ pendent	35	2.4	No
						22.4 (320)	Pendent	25	1.7	No
						25.2 (360)	Pendent	15	1.0	No

Copyright 2014 National Fire Protection Association (NFPA). Licensed, by agreement, for individual use and download on October 4, 2014 to LEADER and READER for designated user PATTARAPORN SRITRAKOOL. No other reproduction or transmission in any form permitted without written permission of NFPA. For inquires or to report unauthorized use, contact licensing@nfpa.org.

Table 17.2.3.1 *Continued*

Storage Arrangement	Commodity	Maximum Storage Height		Maximum Ceiling/Roof Height		Nominal K-Factor	Orientation	Minimum Operating Pressure		In-Rack Sprinkler Requirements
		ft	m	ft	m			psi	bar	
				32	9.8	14.0 (200)	Upright/ pendent	60	4.1	No
						16.8 (240)	Upright/ pendent	42	2.9	No
				35	10.7	14.0 (200)	Upright/ pendent	75	5.2	No
						16.8 (240)	Upright/ pendent	52	3.6	No
						22.4 (320)	Pendent	35	2.4	No
						25.2 (360)	Pendent	20	1.4	No
				40	12.2	16.8 (240)	Pendent	52	3.6	No
						22.4 (320)	Pendent	40	2.8	No
						25.2 (360)	Pendent	25	1.7	No
				45	13.7	14.0 (200)	Pendent	90	6.2	Yes
						16.8 (240)	Pendent	63	4.3	Yes
						22.4 (320)	Pendent	40	2.8	No
						25.2 (360)	Pendent	40	2.8	No
	Exposed nonexpanded	20	6.1	25	7.6	14.0 (200)	Pendent	50	3.4	No
						16.8 (240)	Pendent	35	2.4	No
				30	9.1	14.0 (200)	Pendent	50	3.4	No
						16.8 (240)	Pendent	35	2.4	No
				35	10.7	14.0 (200)	Pendent	75	5.2	No
						16.8 (240)	Pendent	52	3.6	No
				40	12.2	16.8 (240)	Pendent	52	3.6	No
				45	13.7	14.0 (200)	Pendent	90	6.2	Yes
						16.8 (240)	Pendent	63	4.3	Yes

(continues)

Copyright 2014 National Fire Protection Association (NFPA). Licensed, by agreement, for individual use and download on October 4, 2014 to LEADER and READER for designated user PATTARAPORN SRITRAKOOL. No other reproduction or transmission in any form permitted without written permission of NFPA. For inquires or to report unauthorized use, contact licensing@nfpa.org.

Table 17.2.3.1 *Continued*

Storage Arrangement	Commodity	Maximum Storage Height		Maximum Ceiling/Roof Height		Nominal K-Factor	Orientation	Minimum Operating Pressure		In-Rack Sprinkler Requirements
		ft	m	ft	m			psi	bar	
		25	7.6	30	9.1	14.0 (200)	Pendent	50	3.4	No
						16.8 (240)	Pendent	35	2.4	No
				32	9.8	14.0 (200)	Pendent	60	4.1	No
						16.8 (240)	Pendent	42	2.9	No
				35	10.7	14.0 (200)	Pendent	75	5.2	No
						16.8 (240)	Pendent	52	3.6	No
				40	12.2	16.8 (240)	Pendent	52	3.6	No
						22.4 (320)	Pendent	50	3.4	No
						25.2 (360)	Pendent	50	3.4	No
				45	13.7	14.0 (200)	Pendent	90	6.2	Yes
						16.8 (240)	Pendent	63	4.3	Yes
	Cartoned expanded	20	6.1	25	7.6	14.0 (200)	Upright/ pendent	50	3.4	No
						16.8 (240)	Upright/ pendent	35	2.4	No
				30	9.1	14.0 (200)	Upright/ pendent	50	3.4	No
						16.8 (240)	Upright/ pendent	35	2.4	No
		25	7.6	30	9.1	14.0 (200)	Upright/ pendent	50	3.4	No
						16.8 (240)	Upright/ pendent	35	2.4	No
				32	9.8	14.0 (200)	Pendent	60	4.1	No
						16.8 (240)	Upright/ pendent	42	2.9	No

17.2.3.1.1 ESFR protection as defined shall not apply to the following:

(1) Rack storage involving solid shelves
(2) Rack storage involving combustible, open-top cartons or containers

17.2.3.2 ESFR sprinkler systems shall be designed such that the minimum operating pressure is not less than that indicated in Table 17.2.3.1 for type of storage, commodity, storage height, and building height involved.

17.2.3.3 The design area shall consist of the most hydraulically demanding area of 12 sprinklers, consisting of four sprinklers on each of three branch lines.

17.2.3.4 In-Rack Sprinkler Requirements Where ESFR Sprinklers Are Used at Ceiling.

17.2.3.4.1 Where required by Table 17.2.3.1, in-rack sprinklers shall be installed at the first tier level at or above one-half of the storage height.

Copyright 2014 National Fire Protection Association (NFPA). Licensed, by agreement, for individual use and download on October 4, 2014 to LEADER and READER for designated user PATTARAPORN SRITRAKOOL. No other reproduction or transmission in any form permitted without written permission of NFPA. For inquires or to report unauthorized use, contact licensing@nfpa.org.

17.2.3.4.2 In-rack sprinklers shall be K-8.0 (115) or K-11.2 (160) quick-response, ordinary-temperature sprinklers.

17.2.3.4.3 The minimum of 6 in. (152.4 mm) vertical clear space shall be maintained between the sprinkler deflectors and the top of a tier of storage.

17.2.3.4.4 The maximum horizontal distance between in-rack sprinklers shall be 5 ft (1.5 m).

17.2.3.4.5* In-rack sprinklers shall be located at an intersection of transverse and longitudinal flues while not exceeding the maximum spacing rules.

17.2.3.4.6 Where distances between transverse flues exceed the maximum allowable distances, sprinklers shall be installed at the intersection of the transverse and longitudinal flues, and additional sprinklers shall be installed between transverse flues to meet the maximum distance rules.

17.2.3.4.7 Where no transverse flues exist, in-rack sprinklers shall not exceed the maximum spacing rules.

17.2.3.4.8 The water demand for sprinklers installed in racks shall be based on simultaneous operation of the most hydraulically remote eight sprinklers.

17.2.3.4.9 Each of the in-rack sprinklers described in 17.2.3.4.8 shall discharge at a minimum of 60 gpm (227 L/min).

17.2.4 Special Design for Rack Storage of Plastics Commodities Stored Up to and Including 25 ft (7.6 m) in Height.

17.2.4.1 Slatted Shelves.

17.2.4.1.1* Slatted rack shelves shall be considered equivalent to solid rack shelves where the shelving is not considered open rack shelving or where the requirements of 17.2.4.1 are not met. *(See Section C.20.)*

17.2.4.1.2 A wet pipe system that is designed to provide a minimum of 0.6 gpm/ft^2 (24.5 mm/min) density over a minimum area of 2000 ft^2 (186 m^2) or K-14.0 (200) ESFR sprinklers operating at a minimum of 50 psi (3.5 bar), K-16.8 (240) sprinklers operating at a minimum of 32 psi (1.7 bar), or K-25.2 (360) ESFR sprinklers operating at a minimum of 15 psi (1.0 bar) shall be permitted to protect single- and double-row racks with slatted rack shelving racks where all of the following conditions are met:

(1) Sprinklers shall be K-11.2 (160), K-14.0 (200), or K-16.8 (240) orifice spray sprinklers with a temperature rating of ordinary, intermediate, or high and shall be listed for storage occupancies or shall be K-14.0 (200), K-16.8 (240), or K-25.2 (360) ESFR.
(2) The protected commodities shall be limited to Class I through Class IV, Group B plastics, Group C plastics, cartoned (expanded and nonexpanded) Group A plastics, and exposed (nonexpanded) Group A plastics.
(3) Slats in slatted rack shelving shall be a minimum nominal 2 in. (51 mm) thick by maximum nominal 6 in. (152 mm) wide with the slats held in place by spacers that maintain a minimum 2 in. (51 mm) opening between each slat.
(4) Where K-11.2 (160), K-14.0 (200), or K-16.8 (240) orifice sprinklers are used, there shall be no slatted shelf levels in the rack above 12 ft (3.7 m). Open rack shelving using wire mesh shall be permitted for shelf levels above 12 ft (3.7 m).
(5) Transverse flue spaces at least 3 in. (76 mm) wide shall be provided at least every 10 ft (3.1 m) horizontally.
(6) Longitudinal flue spaces at least 6 in. (152 mm) wide shall be provided for double-row racks. Longitudinal flue spaces shall not be required when ESFR sprinklers are used.
(7) The aisle widths shall be at least 7½ ft (2.3 m).
(8) The maximum roof height shall be 27 ft (8.2 m) or 30 ft (9.1 m) where ESFR sprinklers are used.
(9) The maximum storage height shall be 20 ft (6.1 m).
(10) Solid plywood or similar materials shall not be placed on the slatted shelves so that they block the 2 in. (51 mm) spaces between slats, nor shall they be placed on the wire mesh shelves.

17.3 Protection Criteria for Rack Storage of Plastics Commodities Stored Over 25 ft (7.6 m) in Height.

17.3.1 Control Mode Density/Area Sprinkler Protection Criteria for Rack Storage of Plastics Commodities Stored Over 25 ft (7.6 m) in Height for Single-, Double-, and Multiple-Row Racks.

17.3.1.1 Protection of Group A plastics in cartons, expanded or nonexpanded, whether encapsulated or nonencapsulated, shall be permitted using control mode density/area sprinklers in accordance with 17.3.1.

17.3.1.2 Protection of Group A plastics that are exposed and nonexpanded, whether encapsulated or nonencapsulated, shall be permitted only using in-rack sprinkler arrangements that are specifically permitted to be used with exposed nonexpanded plastics.

17.3.1.3* Ceiling Sprinkler Water Demand. For Group A plastic commodities, encapsulated or nonencapsulated, ceiling sprinkler water demand in terms of density [gpm/ft^2 (mm/min)] and area of operation [ft^2 (m^2)] shall be selected from Table 17.3.1.3.

Table 17.3.1.3 Control Mode Density/Area Sprinkler Discharge Criteria for Single-, Double-, and Multiple-Row Racks of Plastics Commodities with Storage Over 25 ft (7.6 m) in Height

Storage Height Above Top Level In-Rack Sprinklers		Ceiling Sprinklers Density	
ft	m	gpm/ft^2 over ft^2	mm/min over m^2
5 or less	1.5 or less	0.30/2000	12.2/186
Over 5 up to 10	Over 1.5 up to 3.05	0.45/2000	18.3/186

17.3.1.4 For protection of cartoned storage of Group A plastics, expanded or nonexpanded, whether encapsulated or nonencapsulated, on single-row racks, in-rack sprinklers shall be arranged in accordance with one of the options in Figure 17.3.1.4(a) through Figure 17.3.1.4(c) or Figure 17.3.1.7. The highest level of in-rack sprinklers shall be not more than 10 ft (3.1 m) below the top of storage.

17.3.1.5 For protection of cartoned storage of Group A plastics, expanded or nonexpanded, whether encapsulated or nonencapsulated, on double-row racks, in-rack sprinklers shall be arranged in accordance with one of the double-row rack options in Figure 17.3.1.5(a), Figure 17.3.1.5(b), or Figure 17.3.1.7. The highest level of in-rack sprinklers shall be not more than 10 ft (3.1 m) below the top of storage.

Copyright 2014 National Fire Protection Association (NFPA). Licensed, by agreement, for individual use and download on October 4, 2014 to LEADER and READER for designated user PATTARAPORN SRITRAKOOL. No other reproduction or transmission in any form permitted without written permission of NFPA. For inquires or to report unauthorized use, contact licensing@nfpa.org.

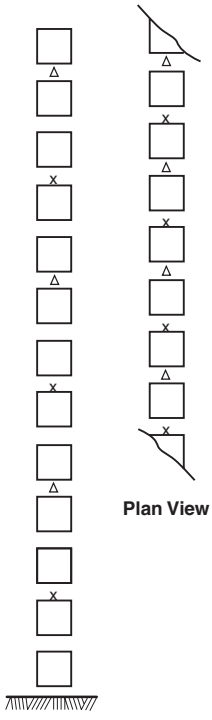

Note: Each square represents a storage cube measuring 4 ft to 5 ft (1.2 m to 1.5 m) on a side. Actual load heights can vary from approximately 18 in. (0.5 m) up to 10 ft (3.1 m). Therefore, there could be as few as one load or as many as six or seven loads between in-rack sprinklers that are spaced 10 ft (3.1 m) apart vertically.

FIGURE 17.3.1.4(a) In-Rack Sprinkler Arrangement, Group A Plastic Commodities, Single-Row Racks, Storage Height Over 25 ft (7.6 m) — Option 1.

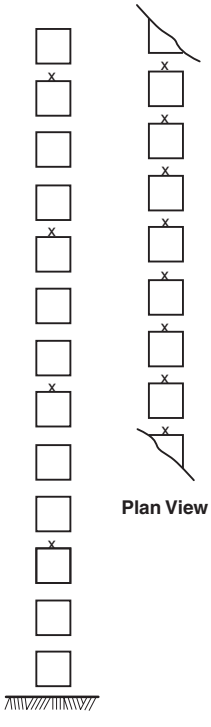

Note: Each square represents a storage cube measuring 4 ft to 5 ft (1.2 m to 1.5 m) on a side. Actual load heights can vary from approximately 18 in. (0.5 m) up to 10 ft (3.1 m). Therefore, there could be as few as one load or as many as six or seven loads between in-rack sprinklers that are spaced 10 ft (3.1 m) apart vertically.

FIGURE 17.3.1.4(b) In-Rack Sprinkler Arrangement, Group A Plastic Commodities, Single-Row Racks, Storage Height Over 25 ft (7.6 m) — Option 2.

Copyright 2014 National Fire Protection Association (NFPA). Licensed, by agreement, for individual use and download on October 4, 2014 to LEADER and READER for designated user PATTARAPORN SRITRAKOOL. No other reproduction or transmission in any form permitted without written permission of NFPA. For inquires or to report unauthorized use, contact licensing@nfpa.org.

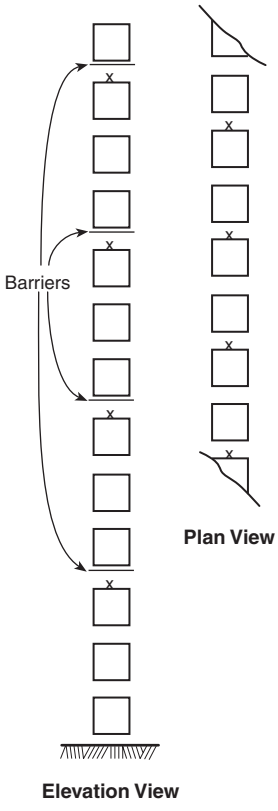

Note: Each square represents a storage cube measuring 4 ft to 5 ft (1.2 m to 1.5 m) on a side. Actual load heights can vary from approximately 18 in. (0.5 m) up to 10 ft (3.1 m). Therefore, there could be as few as one load or as many as six or seven loads between in-rack sprinklers that are spaced 10 ft (3.1 m) apart vertically.

FIGURE 17.3.1.4(c) In-Rack Sprinkler Arrangement, Group A Plastic Commodities, Single-Row Racks, Storage Height Over 25 ft (7.6 m) — Option 3.

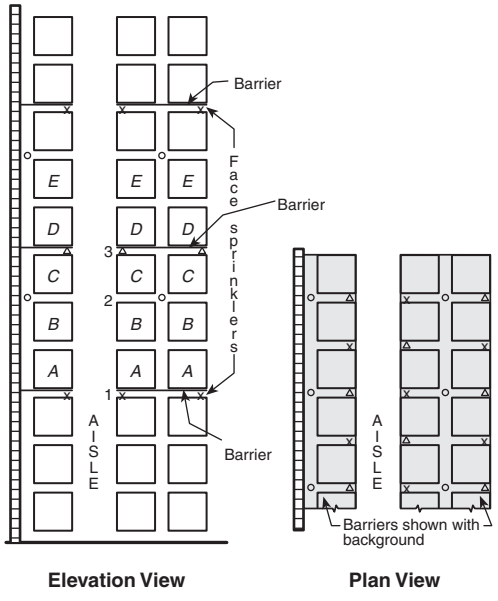

Notes:
1. Sprinklers and barriers labeled 1 shall be required where loads labeled *A* or *B* represent top of storage.
2. Sprinklers labeled 1 and 2 and barriers labeled 1 shall be required where loads labeled *C* represent top of storage.
3. Sprinklers and barriers labeled 1 and 3 shall be required where loads labeled *D* or *E* represent top of storage.
4. For storage higher than represented by loads labeled *E*, the cycle defined by Notes 2 and 3 is repeated.
5. Symbol Δ or x indicates face sprinklers on vertical or horizontal stagger.
6. Symbol o indicates longitudinal flue space sprinklers.
7. Each square represents a storage cube measuring 4 ft to 5 ft (1.2 m to 1.5 m) on a side. Actual load heights can vary from approximately 18 in. (0.5 m) up to 10 ft (3.1 m). Therefore, there could be as few as one load or as many as six or seven loads between in-rack sprinklers that are spaced 10 ft (3.1 m) apart vertically.

FIGURE 17.3.1.5(a) In-Rack Sprinkler Arrangement, Group A Plastic Commodities, Storage Height Over 25 ft (7.6 m) — Option 1.

Copyright 2014 National Fire Protection Association (NFPA). Licensed, by agreement, for individual use and download on October 4, 2014 to LEADER and READER for designated user PATTARAPORN SRITRAKOOL. No other reproduction or transmission in any form permitted without written permission of NFPA. For inquires or to report unauthorized use, contact licensing@nfpa.org.

17.3.1.6 Where a single-row rack of cartoned plastic storage is mixed with double-row racks of cartoned plastic storage, either Figure 17.3.1.5(a) or Figure 17.3.1.5(b) shall be permitted to be used in accordance with the corresponding storage height. The highest level of in-rack sprinklers shall be not more than 10 ft (3.1 m) below the top of storage.

17.3.1.7 For protection of storage of exposed nonexpanded Group A plastics, whether encapsulated or nonencapsulated, on single- racks or double-row racks, in-rack sprinklers shall be arranged in accordance with Figure 17.3.1.7. The highest level of in-rack sprinklers shall be not more than 10 ft (3.1 m) below the top of storage. Where this figure is used, aisles shall be at least 4 ft (1.2 m) wide and the ceiling sprinklers shall be designed for a minimum discharge density of 0.45 gpm/ft^2 over 2000 ft^2 (18.3 mm/min over 186 m^2).

17.3.1.8* For protection of storage of exposed nonexpanded Group A plastics, whether encapsulated or nonencapsulated, or cartoned Group A plastics, expanded or nonexpanded, whether encapsulated or nonencapsulated, on multiple-row racks, in-rack sprinklers shall be arranged in accordance with one of the options in Figure 17.3.1.8(a) through Figure 17.3.1.8(f). The highest level of in-rack sprinklers shall be not more than 10 ft (3.1 m) below the top of storage.

17.3.1.9 The minimum of 6 in. (152 mm) vertical clear space shall be maintained between the in-rack sprinkler deflectors and the top of a tier of storage.

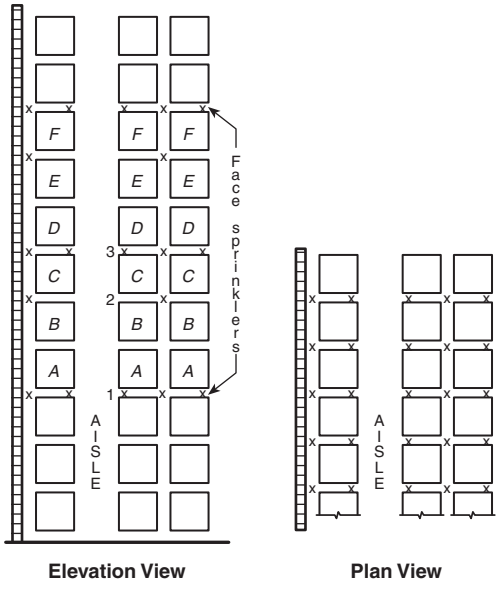

Notes:
1. Sprinklers labeled 1 shall be required where loads labeled *A* or *B* represent top of storage.
2. Sprinklers labeled 1 and 2 shall be required where loads labeled *C* represent top of storage.
3. Sprinklers labeled 1 and 3 shall be required where loads labeled *D* or *E* represent top of storage.
4. For storage higher than loads labeled *F*, the cycle defined by Notes 2 and 3 is repeated.
5. Symbol x indicates face and in-rack sprinklers.
6. Each square represents a storage cube measuring 4 ft to 5 ft (1.2 m to 1.5 m) on a side. Actual load heights can vary from approximately 18 in. (0.5 m) up to 10 ft (3.1 m). Therefore, there could be as few as one load or as many as six or seven loads between in-rack sprinklers that are spaced 10 ft (3.1 m) apart vertically.

FIGURE 17.3.1.5(b) In-Rack Sprinkler Arrangement, Group A Plastic Commodities, Storage Height Over 25 ft (7.6 m) — Option 2.

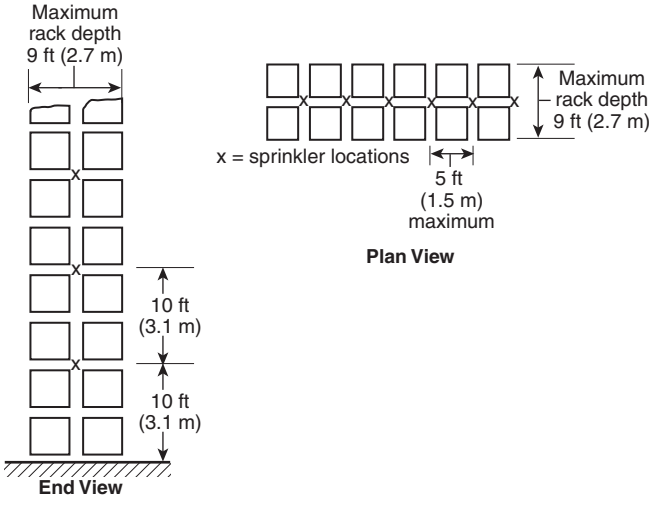

FIGURE 17.3.1.7 In-Rack Sprinkler Arrangement, Cartoned Expanded and Nonexpanded Plastic and Exposed Nonexpanded Plastic Commodities, Single- and Double-Row Racks, Storage Height Over 25 ft (7.6 m).

Copyright 2014 National Fire Protection Association (NFPA). Licensed, by agreement, for individual use and download on October 4, 2014 to LEADER and READER for designated user PATTARAPORN SRITRAKOOL. No other reproduction or transmission in any form permitted without written permission of NFPA. For inquires or to report unauthorized use, contact licensing@nfpa.org.

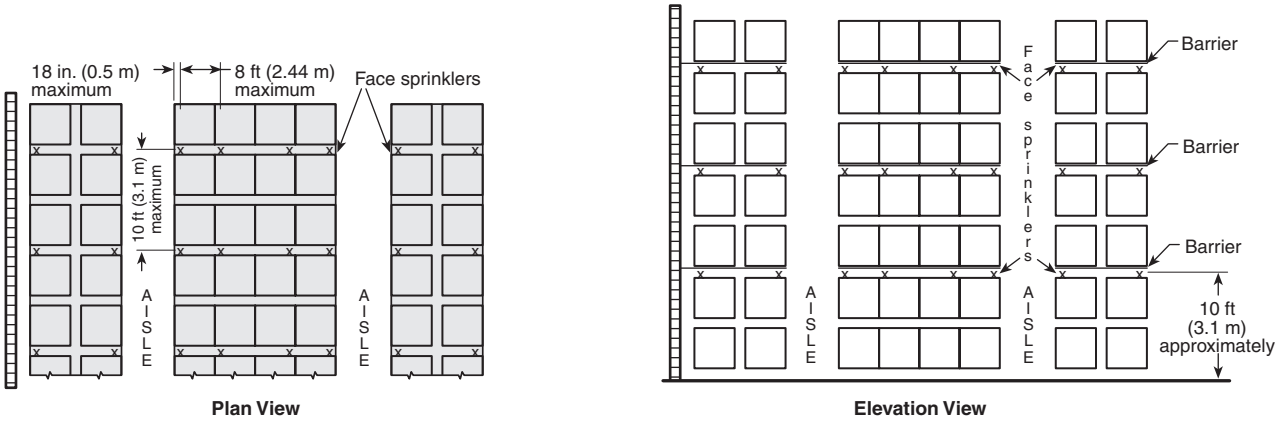

Note: Each square represents a storage cube measuring 4 ft to 5 ft (1.2 m to 1.5 m) on a side. Actual load heights can vary from approximately 18 in. (0.5 m) up to 10 ft (3.1 m). Therefore, there could be as few as one load or as many as six or seven loads between in-rack sprinklers that are spaced 10 ft (3.1 m) apart vertically.

FIGURE 17.3.1.8(a) In-Rack Sprinkler Arrangement, Cartoned Plastic and Exposed Nonexpanded Plastic, Multiple-Row Racks, Storage Height Over 25 ft (7.6 m) — Option 1 [10 ft (3.1 m) Maximum Spacing].

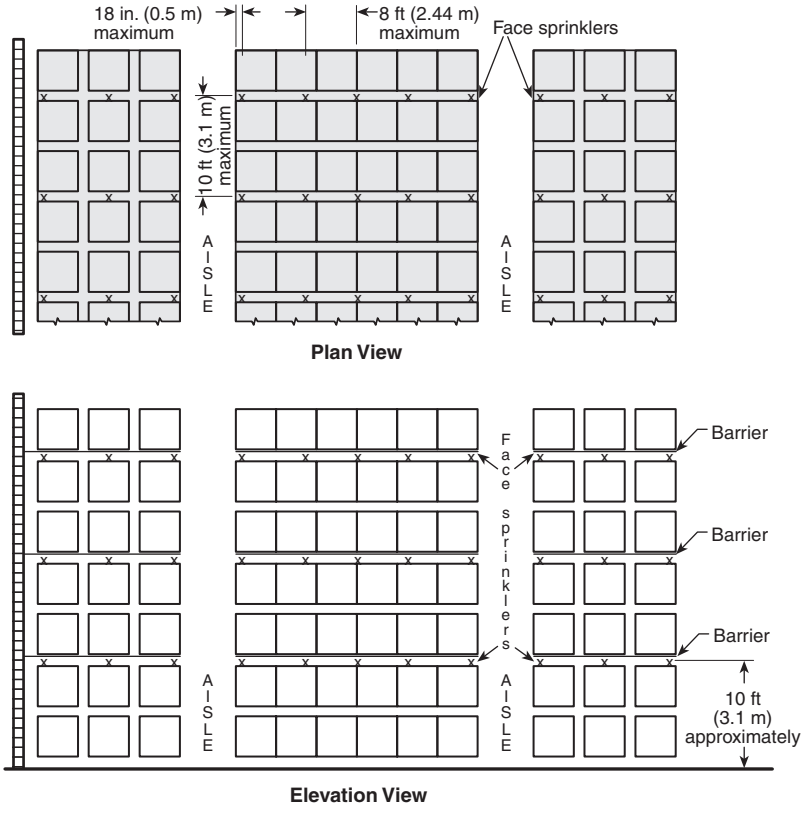

Note: Each square represents a storage cube measuring 4 ft to 5 ft (1.2 m to 1.5 m) on a side. Actual load heights can vary from approximately 18 in. (0.5 m) up to 10 ft (3.1 m). Therefore, there could be as few as one load or as many as six or seven loads between in-rack sprinklers that are spaced 10 ft (3.1 m) apart vertically.

FIGURE 17.3.1.8(b) In-Rack Sprinkler Arrangement, Cartoned Plastic and Exposed Nonexpanded Plastic, Multiple-Row Racks, Storage Height Over 25 ft (7.6 m) — Option 2 [10 ft (3.1 m) Maximum Spacing].

Copyright 2014 National Fire Protection Association (NFPA). Licensed, by agreement, for individual use and download on October 4, 2014 to LEADER and READER for designated user PATTARAPORN SRITRAKOOL. No other reproduction or transmission in any form permitted without written permission of NFPA. For inquires or to report unauthorized use, contact licensing@nfpa.org.

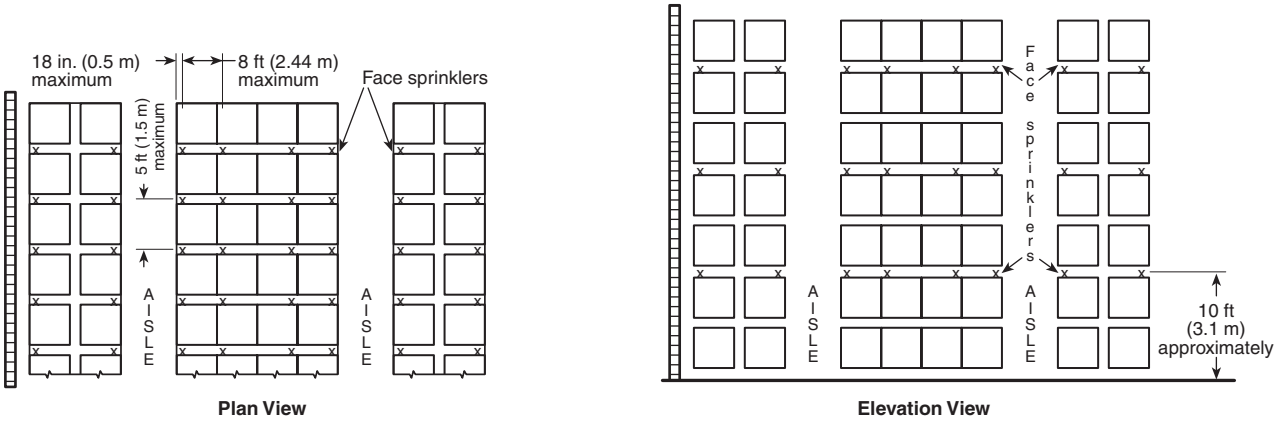

Note: Each square represents a storage cube measuring 4 ft to 5 ft (1.2 m to 1.5 m) on a side. Actual load heights can vary from approximately 18 in. (0.5 m) up to 10 ft (3.1 m). Therefore, there could be as few as one load or as many as six or seven loads between in-rack sprinklers that are spaced 10 ft (3.1 m) apart vertically.

FIGURE 17.3.1.8(c) In-Rack Sprinkler Arrangement, Cartoned Plastic and Exposed Nonexpanded Plastic, Multiple-Row Racks, Storage Height Over 25 ft (7.6 m) — Option 1 [5 ft (1.5 m) Maximum Spacing].

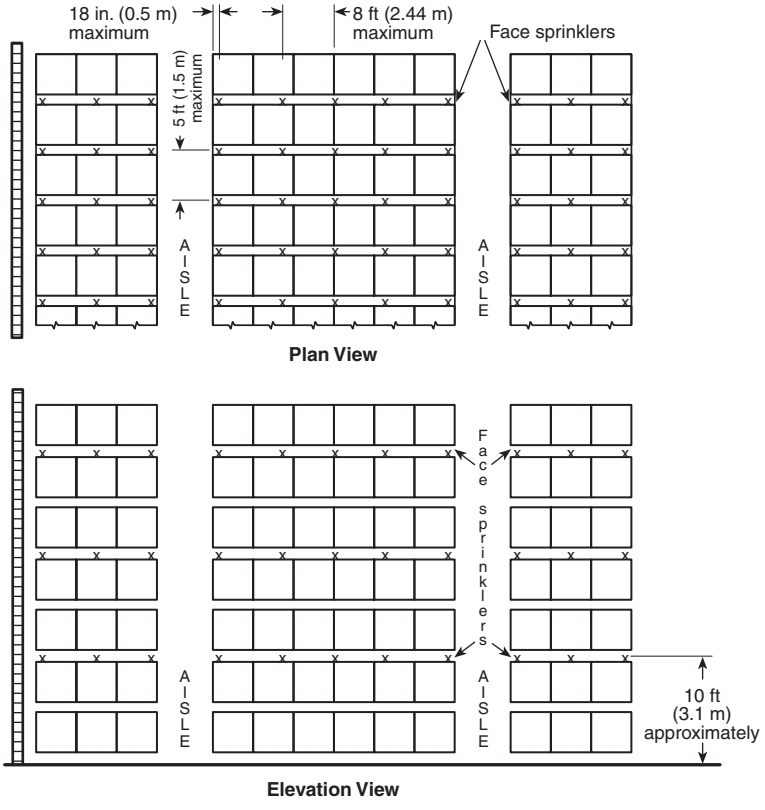

Note: Each square represents a storage cube measuring 4 ft to 5 ft (1.2 m to 1.5 m) on a side. Actual load heights can vary from approximately 18 in. (0.5 m) up to 10 ft (3.1 m). Therefore, there could be as few as one load or as many as six or seven loads between in-rack sprinklers that are spaced 10 ft (3.1 m) apart vertically.

FIGURE 17.3.1.8(d) In-Rack Sprinkler Arrangement, Cartoned Plastic and Uncartoned Unexpanded Plastic, Multiple-Row Racks, Storage Height Over 25 ft (7.6 m) — Option 2 [5 ft (1.5 m) Maximum Spacing].

Copyright 2014 National Fire Protection Association (NFPA). Licensed, by agreement, for individual use and download on October 4, 2014 to LEADER and READER for designated user PATTARAPORN SRITRAKOOL. No other reproduction or transmission in any form permitted without written permission of NFPA. For inquires or to report unauthorized use, contact licensing@nfpa.org.

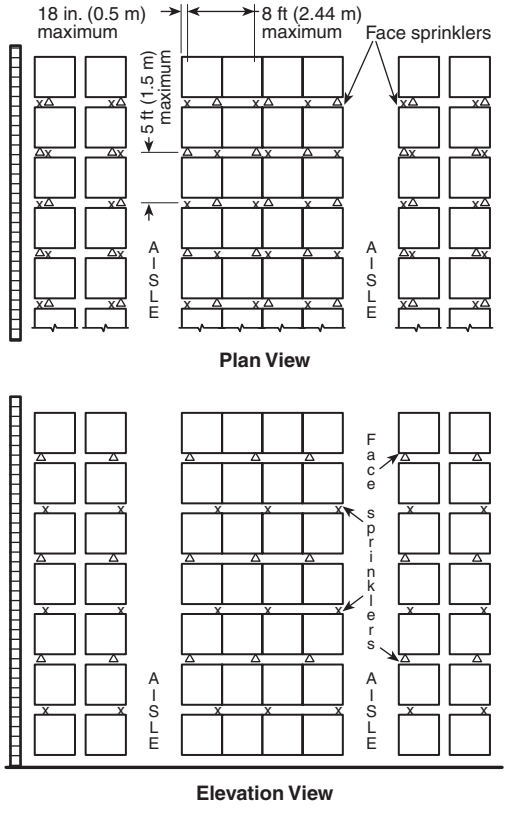

Note: Each square represents a storage cube measuring 4 ft to 5 ft (1.2 m to 1.5 m) on a side. Actual load heights can vary from approximately 18 in. (0.5 m) up to 10 ft (3.1 m). Therefore, there could be as few as one load or as many as six or seven loads between in-rack sprinklers that are spaced 10 ft (3.1 m) apart vertically.

FIGURE 17.3.1.8(e) In-Rack Sprinkler Arrangement, Cartoned Plastic and Exposed Nonexpanded Plastic, Multiple-Row Racks, Storage Height Over 25 ft (7.6 m) — Option 3 [5 ft (1.5 m) Maximum Spacing].

17.3.1.10* In-rack sprinklers shall be located at an intersection of transverse and longitudinal flues while not exceeding the maximum spacing rules.

17.3.1.11 Where distances between transverse flues exceed the maximum allowable distances, sprinklers shall be installed at the intersection of the transverse and longitudinal flues, and additional sprinklers shall be installed between transverse flues to meet the maximum distance rules.

17.3.1.12 Where no transverse flues exist, in-rack sprinklers shall not exceed the maximum spacing rules.

17.3.1.13 In-Rack Sprinkler Water Demand. The water demand for sprinklers installed in racks shall be based on simultaneous operation of the most hydraulically remote sprinklers as follows:

(1) Eight sprinklers where only one level is installed in racks
(2) Fourteen sprinklers (seven on each top two levels) where more than one level is installed in racks

17.3.1.14 In-Rack Sprinkler Discharge Pressure. Sprinklers in racks shall discharge at not less than 30 gpm (113.6 L/min).

17.3.1.15 The minimum water supply requirements for a hydraulically designed occupancy hazard fire control sprinkler system shall be determined by adding the hose stream allowance from Table 17.3.1.15 to the water supply for sprinklers determined in Section 17.3.

17.3.2 CMSA Sprinklers for Rack Storage of Plastics Commodities Stored Over 25 ft (7.6 m) in Height.

17.3.2.1 Protection of single-, double-, and multiple-row rack storage without solid shelves for cartoned, nonexpanded plastic commodities shall be in accordance with Table 17.3.2.1.

17.3.2.2 Protection shall be provided as specified in Table 17.3.2.1 or appropriate NFPA standards in terms of minimum operating pressure and the number of sprinklers to be included in the design area.

17.3.2.3 The design area shall be a rectangular area having a dimension parallel to the branch lines at least 1.2 times the square root of the area protected by the number of sprinklers to be included in the design area. Any fractional sprinkler shall be included in the design area.

17.3.2.4 Building steel shall not require special protection where Table 17.3.2.1 is applied as appropriate for the storage configuration.

17.3.2.5* In-Rack Sprinklers. (Reserved)

17.3.3* Early Suppression Fast-Response (ESFR) Sprinklers for Rack Storage of Plastics Commodities Stored Over 25 ft (7.6 m) in Height.

17.3.3.1 Protection of single-, double-, and multiple-row rack storage of cartoned or exposed, nonexpanded plastic shall be in accordance with Table 17.3.3.1.

Copyright 2014 National Fire Protection Association (NFPA). Licensed, by agreement, for individual use and download on October 4, 2014 to LEADER and READER for designated user PATTARAPORN SRITRAKOOL. No other reproduction or transmission in any form permitted without written permission of NFPA. For inquires or to report unauthorized use, contact licensing@nfpa.org.

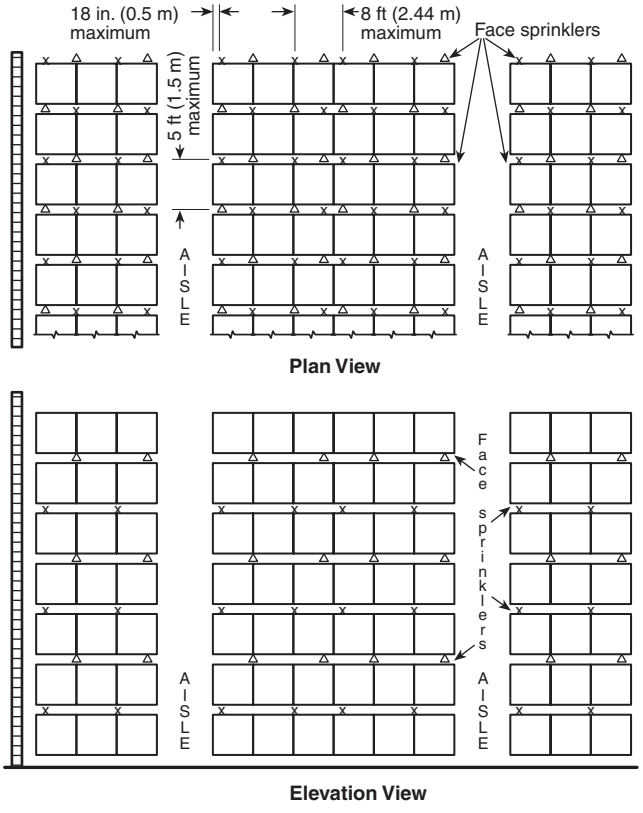

Note: Each square represents a storage cube measuring 4 ft to 5 ft (1.2 m to 1.5 m) on a side. Actual load heights can vary from approximately 18 in. (0.5 m) up to 10 ft (3.1 m). Therefore, there could be as few as one load or as many as six or seven loads between in-rack sprinklers that are spaced 10 ft (3.1 m) apart vertically.

FIGURE 17.3.1.8(f) In-Rack Sprinkler Arrangement, Cartoned Plastic and Exposed Nonexpanded Plastic, Multiple-Row Racks, Storage Height Over 25 ft (7.6 m) — Option 4 [5 ft (1.5 m) Maximum Spacing].

Table 17.3.1.15 Hose Stream Allowance and Water Supply Duration Requirements for Rack Storage of Plastics Commodities Stored Over 25 ft (7.6 m) in Height

Commodity Classification	Storage Height		Inside Hose		Total Combined Inside and Outside Hose		Duration (minutes)
	ft	m	gpm	L/min	gpm	L/min	
Plastic	>25	>7.6	0, 50, or 100	0, 190, or 380	500	1900	120

Table 17.3.2.1 CMSA Sprinkler Design Criteria for Single-, Double-, and Multiple-Row Racks Without Solid Shelves of Plastics Commodities Stored Over 25 ft (7.6 m) in Height

Storage Arrangement	Commodity Class	Maximum Storage Height		Maximum Ceiling/Roof Height		K-Factor/ Orientation	Type of System	Number of Design Sprinklers	Minimum Operating Pressure	
		ft	m	ft	m				psi	bar
Single-, double-, and multiple-row racks without solid shelves (no open-top containers)	Cartoned, nonexpanded plastics	30	9.1	35	10.6	19.6 (280) Pendent	Wet	15	25	1.7
		35	10.6	40	12.1	19.6 (280) Pendent	Wet	15	30	2.1

Copyright 2014 National Fire Protection Association (NFPA). Licensed, by agreement, for individual use and download on October 4, 2014 to LEADER and READER for designated user PATTARAPORN SRITRAKOOL. No other reproduction or transmission in any form permitted without written permission of NFPA. For inquires or to report unauthorized use, contact licensing@nfpa.org.

Table 17.3.3.1 ESFR Protection of Rack Storage Without Solid Shelves of Plastics Commodities Stored Over 25 ft (7.6 m) in Height

Storage Arrangement	Commodity	Maximum Storage Height		Maximum Ceiling/Roof Height		Nominal K-Factor	Orientation	Minimum Operating Pressure		In-Rack Sprinkler Requirements
		ft	m	ft	m			psi	bar	
Single-, double-, and multiple-row racks (no open-top containers)	Cartoned nonexpanded	30	9.1	35	10.7	14.0 (200)	Upright/ pendent	75	5.2	No
						16.8 (240)	Upright/ pendent	52	3.6	No
						22.4 (320)	Pendent	35	2.4	No
						25.2 (360)	Pendent	20	1.4	No
				40	12.2	16.8 (240)	Pendent	52	3.6	No
						22.4 (320)	Pendent	40	2.8	No
						25.2 (360)	Pendent	25	1.7	No
				45	13.7	14.0 (200)	Pendent	90	6.2	Yes
						16.8 (240)	Pendent	63	4.3	Yes
						22.4 (320)	Pendent	40	2.8	No
						25.2 (360)	Pendent	40	2.8	No
		35	10.7	40	12.2	16.8 (240)	Pendent	52	3.6	No
						25.2 (360)	Pendent	25	1.7	No
				45	13.7	14.0 (200)	Pendent	90	6.2	Yes
						16.8 (240)	Pendent	63	4.3	Yes
						22.4 (320)	Pendent	40	2.8	No
						25.2 (320)	Pendent	40	2.8	No
		40	12.2	45	13.7	14.0 (200)	Pendent	90	6.2	Yes
						16.8 (240)	Pendent	63	4.3	Yes
						22.4 (320)	Pendent	40	2.8	No
						25.2 (320)	Pendent	40	2.8	No

(continues)

Copyright 2014 National Fire Protection Association (NFPA). Licensed, by agreement, for individual use and download on October 4, 2014 to LEADER and READER for designated user PATTARAPORN SRITRAKOOL. No other reproduction or transmission in any form permitted without written permission of NFPA. For inquires or to report unauthorized use, contact licensing@nfpa.org.

Table 17.3.3.1 *Continued*

Storage Arrangement	Commodity	Maximum Storage Height		Maximum Ceiling/Roof Height		Nominal K-Factor	Orientation	Minimum Operating Pressure		In-Rack Sprinkler Requirements
		ft	m	ft	m			psi	bar	
	Exposed nonexpanded	30	9.1	35	10.7	14.0 (200)	Pendent	75	5.2	No
						16.8 (240)	Pendent	52	3.6	No
				40	12.2	16.8 (240)	Pendent	52	3.6	No
						22.4 (320)	Pendent	50	3.4	No
						25.2 (320)	Pendent	50	3.4	No
				45	13.7	14.0 (200)	Pendent	90	6.2	Yes
						16.8 (240)	Pendent	63	4.3	Yes
		35	10.7	40	12.2	16.8 (240)	Pendent	52	3.6	No
						22.4 (320)	Pendent	50	3.4	No
						25.2 (320)	Pendent	50	3.4	No
				45	13.7	14.0 (200)	Pendent	90	6.2	Yes
						16.8 (240)	Pendent	63	4.3	Yes
		40	12.2	45	13.7	14.0 (200)	Pendent	90	6.2	Yes
						16.8 (240)	Pendent	63	4.3	Yes

17.3.3.1.1 ESFR sprinklers shall not be permitted to protect storage on solid shelf racks unless the solid shelf racks are protected with in-rack sprinklers in accordance with 17.1.5.

17.3.3.1.2 ESFR sprinklers shall not be permitted to protect storage with open-top containers.

17.3.3.2 ESFR sprinkler systems shall be designed such that the minimum operating pressure is not less than that indicated in Table 17.3.3.1 for type of storage, commodity, storage height, and building height involved.

17.3.3.3 The design area shall consist of the most hydraulically demanding area of 12 sprinklers, consisting of four sprinklers on each of three branch lines.

17.3.3.4 Where required by Table 17.3.3.1, one level of K-8.0 (115) or K-11.2 (160) quick-response, ordinary-temperature in-rack sprinklers shall be installed at the tier level closest to but not exceeding one-half of the maximum storage height.

17.3.3.4.1 In-rack sprinkler hydraulic design criteria shall be the most hydraulically remote eight sprinklers at 60 gpm (227 L/min).

17.3.3.4.2 In-rack sprinklers shall be located at the intersection of the longitudinal and transverse flue space.

17.3.3.4.3 Horizontal spacing shall not be permitted to exceed 5 ft (1.5 m) intervals.

17.3.3.4.4 The minimum of 6 in. (152 mm) vertical clear space shall be maintained between the sprinkler deflectors and the top of a tier of storage.

17.3.3.4.5* In-rack sprinklers shall be located at an intersection of transverse and longitudinal flues while not exceeding the maximum spacing rules.

17.3.3.4.6 Where distances between transverse flues exceed the maximum allowable distances, sprinklers shall be installed at the intersection of the transverse and longitudinal flues, and additional sprinklers shall be installed between transverse flues to meet the maximum distance rules.

17.3.3.4.7 Where no transverse flues exist, in-rack sprinklers shall not exceed the maximum spacing rules.

Chapter 18 Protection of Rubber Tire Storage

18.1 General. The requirements of Chapter 12 shall apply unless modified by this chapter.

Copyright 2014 National Fire Protection Association (NFPA). Licensed, by agreement, for individual use and download on October 4, 2014 to LEADER and READER for designated user PATTARAPORN SRITRAKOOL. No other reproduction or transmission in any form permitted without written permission of NFPA. For inquires or to report unauthorized use, contact licensing@nfpa.org.

18.2 Columns Within Rubber Tire Storage.

18.2.1 Where fireproofing is not provided, steel columns shall be protected as follows:

(1) Storage exceeding 15 ft through 20 ft (4.6 m through 6 m) in height — one sidewall sprinkler directed to one side of the column at a 15 ft (4.6 m) level
(2) Storage exceeding 20 ft (6.1 m) in height — two sidewall sprinklers, one at the top of the column and the other at a 15 ft (4.6 m) level, both directed to the side of the column

18.2.2 The flow from a column sprinkler(s) shall be permitted to be omitted from the sprinkler system hydraulic calculations.

18.2.3 The protection specified in 18.2.1(1) and 18.2.1(2) shall not be required where storage in fixed racks is protected by in-rack sprinklers.

18.2.4 The protection specified in 18.2.1 shall not be required where ESFR or CMSA sprinkler systems that are approved for rubber tire storage are installed.

18.2.5 The rate of water supply shall be sufficient to provide the required sprinkler discharge density over the required area of application plus provision for generation of high-expansion foam and in-rack sprinklers where used.

18.3 Water Supplies. Total water supplies shall be in accordance with the following options:

(1) A minimum of not less than 750 gpm (2835 L/min) for hose streams in addition to that required for automatic sprinklers and foam systems. Water supplies shall be capable of supplying the demand for sprinkler systems and hose streams for not less than 3 hours.
(2) For on-floor storage up to and including 5 ft (1.5 m) in height, hose stream requirements shall be permitted to be 250 gpm (946 L/min) with a water supply duration of not less than 2 hours.
(3) For ESFR and CMSA sprinkler systems approved for rubber tire storage, duration and hose allowance shall be in accordance with Table 18.4(c) and Table 18.4(d).

18.4* Ceiling Systems. Sprinkler discharge and area of application shall be in accordance with one of the following:

(1) Table 18.4(a) or Table 18.4(b) for standard spray sprinklers
(2) Table 18.4(c) for CMSA sprinklers
(3) Table 18.4(d) for ESFR sprinklers

Table 18.4(a) Protection Criteria for Rubber Tire Storage Using Control Mode Density/Area Sprinklers

Piling Method	Pile Height (ft)	Sprinkler Discharge Density (gpm/ft^2 over ft^2) *(see Note 1)*	Areas of Application (ft^2) *(see Note 1)* Ordinary Temperature	Areas of Application (ft^2) *(see Note 1)* High Temperature *(see Note 1)*
(1) On-floor storage	Up to 5	0.19	2000	2000
(a) Pyramid piles, on-side	Over 5 to 12	0.30	2500	2500
(b) Other arrangements such that no horizontal channels are formed *(see Note 2)*	Over 12 to 18	0.60	Not allowed	2500
(2) On-floor storage	Up to 5	0.19	2000	2000
Tires, on-tread	Over 5 to 12	0.30	2500	2500
(3) Palletized portable rack storage	Up to 5	0.19	2000	2000
On-side or on-tread	Over 5 to 20	See Table 18.4(b)	—	—
	Over 20 to 30	0.30 plus high-expansion foam	3000	3000
(4) Palletized portable rack storage, on-side	Up to 5	0.19	2000	2000
	Over 5 to 20	See Table 18.4(b)	—	—
	Over 20 to 25	0.60 and	Not allowed	5000
		0.90 *(see Note 3)* or	Not allowed	3000
		0.75 with 1-hour fire-resistive rating of roof and ceiling assembly	Not allowed	4000
(5) Open portable rack storage, on-side or on-tread	Up to 5	0.19	2000	2000
	Over 5 to 12	0.60	5000	3000
	Over 12 to 20	0.60 and	Not allowed	5000
		0.90 *(see Note 3)* or	Not allowed	3000
		0.30 plus high-expansion foam	3000	3000

(continues)

Copyright 2014 National Fire Protection Association (NFPA). Licensed, by agreement, for individual use and download on October 4, 2014 to LEADER and READER for designated user PATTARAPORN SRITRAKOOL. No other reproduction or transmission in any form permitted without written permission of NFPA. For inquires or to report unauthorized use, contact licensing@nfpa.org.

Table 18.4(a) ***Continued***

Piling Method	Pile Height (ft)	Sprinkler Discharge Density (gpm/ft² over ft²) *(see Note 1)*	Areas of Application (ft²) *(see Note 1)* Ordinary Temperature	Areas of Application (ft²) *(see Note 1)* High Temperature *(see Note 1)*
(6) Open portable rack storage, laced	Over 12 to 20	0.60 and	Not allowed	5000
		0.90 *(see notes 3 and 5)*	Not allowed	3000
(7) Single-, double-, and multiple-row fixed rack storage on pallets, on-side, or on-tread without shelves	Up to 5	0.19	2000	2000
	Over 5 to 20	See Table 18.4(b) or	3000	3000
		0.40 plus one level in-rack sprinklers or		
		0.30 plus high-expansion foam	3000	3000
	Over 20 to 30	0.30 plus high-expansion foam	Not allowed	3000
(8) Single-, double-, and multiple-row fixed rack storage without pallets or shelves, on-side or on-tread	Up to 5	0.19	2000	2000
	Over 5 to 12	0.60	5000	3000
		0.40 plus one level in-rack sprinklers	3000	3000
	Over 12 to 20	0.60 and	Not allowed	5000
		0.90 *(see Note 3)* or	Not allowed	3000
		0.40 plus one level in-rack sprinklers or	3000	3000
		0.30 plus high-expansion foam	3000	3000
	Over 20 to 30	0.30 plus high-expansion foam	Not allowed	3000

For SI units, 1 ft = 0.3048 m; 1 ft² = 0.0929 m²; 1 gpm/ft² = 40.746 mm/min.

Notes:

(1) Sprinkler discharge densities and areas of application are based on a maximum clearance to ceiling of 10 ft (3.1 m) with the maximum height of storage anticipated.

(2) Laced tires on-floor, vertical stacking on-side (typical truck tires), and off-road tires. Laced tires are not stored to a significant height by this method due to the damage inflicted on the tire (i.e., bead).

(3) Water supply shall fulfill both requirements.

(4) Shelf storage of rubber tires shall be protected as solid rack shelving.

(5) This protection scheme is for use with K-16.8 (240) or larger control mode sprinklers only. Maximum clearance to ceiling can be increased to 14 ft (4.25 m) with this scheme.

Table 18.4(b) Control Mode Density/Area Sprinklers System Density (gpm/ft² over ft²) for Palletized Portable Rack Storage and Fixed Rack Storage of Rubber Tires with Pallets Over 5 ft to 20 ft in Height

Storage Height (ft)	Sprinkler Temperature	
	High Temperature	Ordinary Temperature
>5 to 10	0.32/2000	0.32/2000
>10 to 12	0.39/2000	0.39/2600
>12 to14	0.45/2000	0.45/3200
>14 to 16	0.5/2300	0.5/3700
>16 to 18	0.55/2600	0.55/4400
>18 to 20	0.6/3000	0.6/5000

Copyright 2014 National Fire Protection Association (NFPA). Licensed, by agreement, for individual use and download on October 4, 2014 to LEADER and READER for designated user PATTARAPORN SRITRAKOOL. No other reproduction or transmission in any form permitted without written permission of NFPA. For inquires or to report unauthorized use, contact licensing@nfpa.org.

Table 18.4(c) Control Mode Specific Application (CMSA) Protection for Rubber Tires

Piling Method	Maximum Storage Height ft	Maximum Storage Height m	Maximum Ceiling/Roof Height ft	Maximum Ceiling/Roof Height m	K-Factor	Type of System	Number of Sprinklers	Operating Pressure	Hose Stream Allowance	Water Supply Duration (hours)
Rubber tire storage, on-side or on-tread, in palletized portable racks, or open portable racks, or fixed racks without solid shelves	25	7.6	32	9.8	11.2 (160)	Wet	15	75 psi (5.2 bar)	500 gpm (1900 L/min)	3
	25	7.6	32	9.8	16.8 (240)	Wet	15	35 psi (2.4 bar)	500 gpm (1900 L/min)	3

Table 18.4(d) Early Suppression Fast-Response (ESFR) Sprinklers for Protection of Rubber Tires *(see Note 1)*

Piling Method	Pile Height	Maximum Building Height ft	Maximum Building Height m	Nominal K-factor	Orientation	Number of Sprinklers	Minimum Operating Pressure *(see Note 2)* psi	Minimum Operating Pressure *(see Note 2)* bar	Duration (hours)	Hose Allowance gpm	Hose Allowance L/min
Rubber tire storage, on-side or on-tread, in palletized portable racks, open portable racks, or fixed racks without solid shelves	Up to 25 ft (7.6 m)	30	9.1	14.0 (200)	Upright/ pendent	12 *(see Note 2)*	50	3.5	1	250	946
				16.8 (240)	Upright/ pendent	12 *(see Note 2)*	35	2.4	1	250	946
				22.4 (320)	Pendent	12 *(see Note 2)*	25	1.7	1	250	946
				25.2 (360)	Pendent	12 *(see Note 2)*	15	1.0	1	250	946
Rubber tire storage, on-side, in palletized portable racks, open portable racks, or fixed racks without solid shelves	Up to 25 ft (7.6 m)	35	10.7	14.0 (200)	Upright/ pendent	12 *(see Note 2)*	75	5.2	1	250	946
				16.8 (240)	Pendent	12 *(see Note 2)*	52	3.6	1	250	946
				22.4 (320)	Pendent	12 *(see Note 2)*	35	2.4	1	250	946
				25.2 (360)	Pendent	12 *(see Note 2)*	25	1.7	1	250	946
On-tread, on-side, and laced tires in open portable steel racks or palletized portable racks	Up to 25 ft (7.6 m)	30	9.1	14.0 (200)	Pendent	20 *(see Notes 3 and 4)*	75	5.2	3	500	1900
				16.8 (240)	Pendent	20 *(see Notes 3 and 4)*	52	3.6			
Rubber tire storage, on-side, in palletized portable racks	Up to 25 ft (7.6 m)	40	12.2		Pendent	12	75	5.2	1	250	946
				16.8 (240)	Pendent	12	52	3.6			
Rubber tire storage, on-tread, or laced in open portable steel racks	Up to 25 ft (7.6 m)	40	12.2	25.2 (360)	Pendent	12	40	2.8	1	250	946
On-tread, on-side, and laced tires in open portable steel racks or palletized portable racks	Up to 30 ft (9.1 m)	40	12.2	25.2 (360)	Pendent	12	75	5.2	1	250	946

Notes:

(1) Wet systems only.

(2) The shape of the design area shall be in accordance with 14.4.3 and 14.4.4.

(3) Where used in this application, ESFR protection is expected to control rather than to suppress the fire.

(4) The design area shall consist of the most hydraulically demanding area of 20 sprinklers, consisting of five sprinklers on each of four branch lines. The design shall include a minimum operating area of 1600 ft^2 (149 m^2).

Copyright 2014 National Fire Protection Association (NFPA). Licensed, by agreement, for individual use and download on October 4, 2014 to LEADER and READER for designated user PATTARAPORN SRITRAKOOL. No other reproduction or transmission in any form permitted without written permission of NFPA. For inquires or to report unauthorized use, contact licensing@nfpa.org.

18.5 In-Rack Sprinkler System Requirements for Protection of Rubber Tires.

18.5.1 In-rack sprinklers, where provided, shall be installed in accordance with Chapter 17, except as modified by 18.5.2 through 18.5.4.

18.5.2 The maximum horizontal spacing of sprinklers in racks shall be 8 ft (2.4 m).

18.5.3 Water demand for sprinklers installed in racks shall be based on simultaneous operation of the most hydraulically remote 12 sprinklers where only one level is installed in racks.

18.5.4 Sprinklers in racks shall discharge at not less than 30 psi (2.1 bar).

18.6 Reduced-Discharge Density. Where high-expansion foam systems are installed in accordance with NFPA 11, a reduction in sprinkler discharge density to one-half the density specified in Table 18.4(a) or 0.24 gpm/ft^2 (9.78 mm/min), whichever is higher, shall be permitted.

Chapter 19 Protection of Roll Paper

19.1* Protection of Roll Paper Storage.

19.1.1 General. The requirements of Chapter 12 shall apply unless modified by this chapter.

19.1.1.1 The water supply system for automatic fire protection systems shall be designed for a minimum duration of 2 hours.

19.1.1.1.1 For ESFR sprinklers, the water supply duration shall be 1 hour.

19.1.1.2 At least 500 gpm (1900 L/min) shall be added to the sprinkler demand for large and small hose stream allowance.

19.1.1.2.1 For ESFR sprinklers, the hose stream allowance shall be for 250 gpm (946 L/min).

19.1.1.3 The water supply design shall include the demand of the automatic sprinkler system plus the hose stream allowance plus, where provided, the high-expansion foam system.

19.1.1.4 Wet pipe systems shall be used in tissue storage areas.

19.1.1.5 Horizontal storage of heavyweight or mediumweight paper shall be protected as a closed array.

19.1.1.6 Mediumweight paper shall be permitted to be protected as heavyweight paper where wrapped completely on the sides and both ends, or where wrapped on the sides only with steel bands. Wrapping material shall be either a single layer of heavyweight paper with a basis weight of 40 lb (18.1 kg) or two layers of heavyweight paper with a basis weight of less than 40 lb (18.1 kg).

19.1.1.7 Lightweight paper or tissue paper shall be permitted to be protected as mediumweight paper where wrapped completely on the sides and both ends, or where wrapped on the sides only with steel bands. Wrapping material shall be either a single layer of heavyweight paper with a basis weight of 40 lb (18.1 kg) or two layers of heavyweight paper with a basis weight of less than 40 lb (18.1 kg).

19.1.1.8 For purposes of sprinkler system design criteria, lightweight class paper shall be protected as tissue.

19.1.2* Protection Criteria for Roll Paper Storage.

19.1.2.1 Control Mode Density/Area Sprinkler Protection Criteria for Roll Paper Storage.

19.1.2.1.1 Storage of heavyweight or mediumweight classes of rolled paper up to 10 ft (3.1 m) in height shall be protected by sprinklers designed for ordinary hazard Group 2 densities.

19.1.2.1.2 Storage of tissue and lightweight classes of paper up to 10 ft (3.1 m) in height shall be protected by sprinklers in accordance with extra hazard Group 1 densities.

19.1.2.1.3 Sprinkler design criteria for storage of roll paper 10 ft (3.1 m) high and higher in buildings or structures with roof or ceilings up to 30 ft (9.1 m) shall be in accordance with Table 19.1.2.1.3(a) and Table 19.1.2.1.3(b).

19.1.2.1.4* High-temperature sprinklers shall be used for installations protecting roll paper stored 15 ft (4.6 m) or higher.

Table 19.1.2.1.3(a) Control Mode Density/Area Sprinkler Protection Criteria for Roll Paper Storage for Buildings or Structures with Roof or Ceilings Up to 30 ft (Discharge Densities are gpm/ft^2 over ft^2)

Storage Height (ft)	Clearance to Ceiling (ft)	Heavyweight					Mediumweight				Tissue All Storage Arrays
		Closed Array Banded or Unbanded	Standard Array		Open Array		Closed Array Banded or Unbanded	Standard Array		Open Array Banded or Unbanded	
			Banded	Unbanded	Banded	Unbanded		Banded	Unbanded		
10	≤5	0.3/2000	0.3/2000	0.3/2000	0.3/2000	0.3/2000	0.3/2000	0.3/2000	0.3/2000	0.3/2000	0.45/2000
10	>5	0.3/2000	0.3/2000	0.3/2000	0.3/2000	0.3/2000	0.3/2000	0.3/2000	0.3/2000	0.3/2000	0.45/2500
15	≤5	0.3/2000	0.3/2000	0.3/2000	0.3/2500	0.3/3000	0.3/2000	0.3/2000	0.45/2500	0.45/2500	0.60/2000
15	>5	0.3/2000	0.3/2000	0.3/2000	0.3/3000	0.3/3500	0.3/2000	0.3/2500	0.45/3000	0.45/3000	0.60/3000
20	≤5	0.3/2000	0.3/2000	0.3/2500	0.45/3000	0.45/3500	0.3/2000	0.45/2500	0.6/2500	0.6/2500	0.75/2500
20	>5	0.3/2000	0.3/2500	0.3/3000	0.45/3500	0.45/4000	0.3/2500	0.45/3000	0.6/3000	0.6/3000	0.75/3000
25	≤5	0.45/2500	0.45/3000	0.45/3500	0.6/2500	0.6/3000	0.45/3000	0.6/3000	0.75/2500	0.75/2500	*see Note 1*

Notes:
(1) Sprinkler protection requirements for tissue stored above 20 ft have not been determined.
(2) Densities or areas, or both, shall be permitted to be interpolated between any 5 ft storage height increment.

Copyright 2014 National Fire Protection Association (NFPA). Licensed, by agreement, for individual use and download on October 4, 2014 to LEADER and READER for designated user PATTARAPORN SRITRAKOOL. No other reproduction or transmission in any form permitted without written permission of NFPA. For inquires or to report unauthorized use, contact licensing@nfpa.org.

Table 19.1.2.1.3(b) Control Mode Density/Area Sprinkler Protection Criteria for the Protection of Roll Paper Storage for Buildings or Structures with Roof or Ceilings Up to 9.1 m (Discharge Densities are mm/min over m^2)

Storage Height (m)	Clearance to Ceiling (m)	Heavyweight					Mediumweight				Tissue All Storage Arrays
		Closed Array Banded or Unbanded	Standard Array		Open Array		Closed Array Banded or Unbanded	Standard Array		Open Array Banded or Unbanded	
			Banded	Unbanded	Banded	Unbanded		Banded	Unbanded		
3.1	≤1.5	12.2/185.8	12.2/185.8	12.2/185.8	12.2/185.8	12.2/185.8	12.2/185.8	12.2/185.8	12.2/185.8	12.2/185.8	18.3/185.8
3.1	>1.5	12.2/185.8	12.2/185.8	12.2/185.8	12.2/185.8	12.2/185.8	12.2/185.8	12.2/185.8	12.2/185.8	12.2/185.8	18.3/232.3
4.6	≤1.5	12.2/185.8	12.2/185.8	12.2/185.8	12.2/232.3	12.2/278.7	12.2/185.8	12.2/185.8	18.3/232.3	18.3/232.3	24.5/185.8
4.6	>1.5	12.2/185.8	12.2/185.8	12.2/185.8	12.2/278.7	12.2/322.2	12.2/185.8	12.2/232.3	18.3/278.7	18.3/278.7	24.5/278.7
6.1	≤1.5	12.2/185.8	12.2/185.8	12.2/232.3	18.3/278.7	18.3/325.2	12.2/185.8	18.3/232.3	24.5/232.3	24.5/232.3	30.6/232.3
6.1	>1.5	12.2/185.8	12.2/232.3	12.2/278.7	18.3/325.2	18.3/371.6	12.2/232.3	18.3/278.7	24.5/278.7	24.5/278.7	30.6/278.7
7.6	≤1.5	18.3/232.3	18.3/278.7	18.3/325.2	24.5/232.3	24.5/278.7	18.3/278.7	24.5/278.7	30.6/232.3	30.6/232.3	*see Note 1*

Notes:
(1) Sprinkler protection requirements for tissue stored above 6.1 m have not been determined.
(2) Densities or areas, or both, shall be permitted to be interpolated between any 1.5 m storage height increment.

19.1.2.1.5 The protection area per sprinkler shall not exceed 100 ft^2 (9.3 m^2) or be less than 70 ft^2 (6.5 m^2).

19.1.2.1.6 Where high-expansion foam systems are installed in heavyweight class and mediumweight class storage areas, sprinkler discharge design densities shall be permitted to be reduced to not less than 0.24 gpm/ft^2 (9.8 mm/min) with a minimum operating area of 2000 ft^2 (186 m^2).

19.1.2.1.7 Where high-expansion foam systems are installed in tissue storage areas, sprinkler discharge densities and areas of application shall not be reduced below those provided in Table 19.1.2.1.3(a) and Table 19.1.2.1.3(b).

19.1.2.2 CMSA Sprinklers for Protection of Roll Paper Storage. Where automatic sprinkler system protection utilizes CMSA sprinklers, hydraulic design criteria shall be as specified in Table 19.1.2.2.

19.1.2.3 Early Suppression Fast-Response (ESFR) Sprinklers for Protection of Roll Paper Storage. Where automatic sprinkler system protection utilizes ESFR sprinklers, hydraulic design criteria shall be as specified in Table 19.1.2.3. Design discharge pressure shall be applied to 12 operating sprinklers.

Table 19.1.2.2 CMSA Sprinklers for Protection of Roll Paper Storage [Number of Sprinklers at Operating Pressure, psi (bar)]

Storage Height		Maximum Building Height		Nominal K-Factor	Type of System	Heavyweight					Mediumweight					Tissue All Storage Arrays
						Closed Array	Standard Array		Open Array		Closed Array	Standard Array		Open Array		
ft	m	ft	m			Banded or Unbanded	Banded	Unbanded	Banded	Unbanded	Banded or Unbanded	Banded	Unbanded	Banded	Unbanded	
20	6.1	30	9.1	11.2 (160)	Wet	15 at 50(3.4)	15 at 50(3.4)	15 at 50(3.4)	15 at 50(3.4)	NA	15 at 50(3.4)	15 at 50(3.4)	15 at 50(3.4)	NA	NA	See Note
20	6.1	30	9.1	11.2 (160)	Dry	25 at 50(3.4)	25 at 50(3.4)	25 at 50(3.4)	NA	NA	25 at 50(3.4)	25 at 50(3.4)	25 at 50(3.4)	NA	NA	NA
26	7.9	60	18.3	11.2 (160)	Wet	15 at 50(3.4)	15 at 50(3.4)	15 at 50(3.4)	15 at 50(3.4)	NA	NA	NA	NA	NA	NA	NA
20	6.1	30	9.1	16.8 (240)	Wet	15 at 22(1.5)	15 at 22(1.5)	15 at 22(1.5)	15 at 22(1.5)	NA	15 at 22(1.5)	15 at 22(1.5)	15 at 22(1.5)	NA	NA	See Note
20	6.1	30	9.1	16.8 (240)	Dry	25 at 22(1.5)	25 at 22(1.5)	25 at 22(1.5)	NA	NA	25 at 22(1.5)	25 at 22(1.5)	25 at 22(1.5)	NA	NA	NA
26	7.9	60	18.3	16.8 (240)	Wet	15 at 22(1.5)	15 at 22(1.5)	15 at 22(1.5)	15 at 22(1.5)	NA	NA	NA	NA	NA	NA	NA

Note: Base design on 25 AS at 75 psi (5.2 bar) for K-11.2 (160) sprinklers or 25 AS at 35 psi (240) for K-16.8 (240) sprinklers when storage is in closed or standard array; other arrays NA.
NA: Not applicable.

Copyright 2014 National Fire Protection Association (NFPA). Licensed, by agreement, for individual use and download on October 4, 2014 to LEADER and READER for designated user PATTARAPORN SRITRAKOOL. No other reproduction or transmission in any form permitted without written permission of NFPA. For inquires or to report unauthorized use, contact licensing@nfpa.org.

Table 19.1.2.3 ESFR Sprinklers for Protection of Roll Paper Storage (Maximum Height of Storage Permitted)

ESFR K-Factor	Orientation	System Type	Pressure		Building Height		Heavyweight						Mediumweight						Tissue All Arrays
							Closed		Standard		Open		Closed		Standard		Open		
			psi	bar	ft	m	ft	m	ft	m	ft	m	ft	m	ft	m	ft	m	
14.0 (201)	Upright/ pendent	Wet	50	3.4	30	9.1	25	7.6	25	7.6	25	7.6	25	7.6	25	7.6	25	7.6	NA
16.8 (242)	Upright/ pendent	Wet	35	2.4															
22.4 (322)	Pendent	Wet	25	1.7															
25.2 (363)	Pendent	Wet	15	1.0															
14.0 (201)	Upright/ pendent	Wet	75	5.2	35	10.7	30	9.1	30	9.1	30	9.1	NA		NA		NA		NA
16.8 (242)	Upright/ pendent	Wet	52	3.6															
	Pendent	Wet	75	5.2	40	12.2	30	9.1	30	9.1	30	9.1	NA		NA		NA		NA
16.8 (242)	Pendent	Wet	52	3.6															
22.4 (322)	Pendent	Wet	40	2.8															
25.2 (363)	Pendent	Wet	25	1.7															
22.4 (322)	Pendent	Wet	50	3.4	45	13.7	30	9.1	30	9.1	30	9.1	NA		NA		NA		NA
25.2 (363)	Pendent	Wet	50	3.4															

NA: Not applicable.

Chapter 20 Special Designs of Storage Protection

20.1 General. The requirements of Chapter 12 shall apply unless modified by this chapter.

20.2* Plastic Motor Vehicle Components. Plastic automotive components and associated packaging material shall be permitted to be protected in accordance with Table 20.2.

20.3* Sprinkler Design Criteria for Storage and Display of Class I Through Class IV Commodities, Cartoned Nonexpanded Group A Plastics and Nonexpanded Exposed Group A Plastics in Retail Stores.

20.3.1 A wet pipe system designed to meet two separate design points — 0.6 gpm/ft^2 (24.4 mm/min) density over 2000 ft^2 (186 m^2) and 0.7 gpm/ft^2 (28.5 mm/min) density for the four hydraulically most demanding sprinklers with 500 gpm (1900 L/min) hose stream allowance for a 2-hour duration — shall be permitted to protect single- and double-row slatted shelf racks when the following conditions are met:

(1) An extended coverage sprinkler with a nominal K-factor of K-25.2 (360) listed for storage occupancies shall be provided.
(2) Shelves shall be either open shelving or slatted using a 2 in. (50 mm) thick by maximum 6 in. (152 mm) wide slat held in place by spacers that maintain a minimum 2 in. (50 mm) opening between each slat.
(3) There shall be no slatted shelf levels in the rack above nominal 12 ft (3.66 m) level. Wire mesh (greater than 50 percent opening) shall be permitted for shelf levels above 12 ft (3.66 m).
(4) A single level of solid shelving (3½ ft × 8 ft 3 in.) (1.07 m × 2.51 m) shall be permissible at an elevation of not more than 5 ft (1.52 m).
(5) Perforated metal (open area of 40 percent or more) shall be permitted over either the open shelving or the slatted shelves up to the 60 in. (1.52 m) level.
(6) Other than what is allowed in this section, solid plywood or similar materials shall not be placed on the slatted shelves.
(7) Solid displays shall be permissible, provided that all flues are maintained and only one display is installed per bay.
(8) Maximum roof height shall be 30 ft (9.14 m) in the protected area.
(9) Maximum storage height shall be 22 ft (6.71 m).
(10) Aisle widths shall be a minimum of 8 ft (2.44 m).
(11) Minimum transverse flue spaces of 3 in. every 10 ft (76 mm every 3.05 m) horizontally shall be provided.
(12) Minimum longitudinal flue spaces of 6 in. (152 mm) shall be provided for double-row racks.
(13) Storage in the aisle shall be permissible, provided the aisle storage is no more than 4 ft (1.22 m) high and a minimum clear aisle of 4 ft (1.22 m) is maintained.

Copyright 2014 National Fire Protection Association (NFPA). Licensed, by agreement, for individual use and download on October 4, 2014 to LEADER and READER for designated user PATTARAPORN SRITRAKOOL. No other reproduction or transmission in any form permitted without written permission of NFPA. For inquires or to report unauthorized use, contact licensing@nfpa.org.

Table 20.2 ESFR Sprinkler Design Criteria K-25.2 (360) for Portable Racks (Closed Array[a]) Without Solid Shelves Containing Automotive Components

Commodity	Maximum Storage Height		Maximum Ceiling/Roof Height		Type of System	Maximum Sprinkler Spacing[b]		Number of Design Sprinklers by Minimum Operating Pressure[c]		Maximum Deflector Distance Below Ceiling[d]		Hose Stream Allowance		Water Supply Duration (hours)
	ft	m	ft	m		ft^2	m^2	psi	bar	in.	mm	gpm	L/min	
Automotive components and associated packaging material	25	7.6	35	10.7	Wet	100	9.3	16 at 37 psi	16 at 2.5 bar	18	457	500	1900	2

[a]Portable rack array shall be tightly nested without any flue spaces.
[b]Sprinkler spacing can exceed 100 ft^2 (9.3 m^2) where sprinklers are listed for larger spacing.
[c]System hydraulic design shall also be capable of delivering a discharge density of 0.60 gpm/ft^2 (24.4 mm/m) over the most hydraulically remote 4000 ft^2 (372 m^2) area.
[d]Maximum deflector distance below ceiling shall be permitted to exceed 18 in. (456 mm) where sprinklers are listed for greater distances.

20.3.2 A wet pipe system designed to meet two separate design points — 0.425 gpm/ft^2 (17.3 mm/min) density over 2000 ft^2 (186 m^2) and 0.50 gpm/ft^2 (20.4 mm/min) density for the four hydraulically most demanding sprinklers with 500 gpm (1900 L/min) hose stream allowance for a 2-hour duration — shall be permitted in solid steel cantilever-style retail shelving racks (gondola racks) when the following conditions are met:

(1) An extended coverage sprinkler with a nominal K-factor of K-25.2 (360) listed for storage occupancies shall be provided.
(2) The storage height shall not exceed 12 ft (3.66 m).
(3) The ceiling height shall not exceed 22 ft (6.71 m) in the protected area.
(4) Gondola rack structure shall not exceed 48 in. (1.22 m) in aggregate depth or 78 in. (1.99 m) in height.
(5) A minimum aisle of 5 ft (1.52 m) between storage shall be maintained.
(6) Rack lengths shall be no more than 70 ft (21.3 m).

20.3.3 A wet system designed to meet two separate design points — 0.425 gpm/ft^2 (17.3 mm/min) density over 2000 ft^2 (186 m^2) and 0.50 gpm/ft^2 (20.4 mm/min) density for the four hydraulically most demanding sprinklers with 500 gpm (1900 L/min) hose stream allowance for a 2-hour duration — shall be permitted in solid steel cantilever-style retail shelving racks (gondola racks) when the following conditions are met:

(1) An extended coverage sprinkler with a nominal K-factor of K-25.2 (360) listed for storage occupancies shall be provided.
(2) Storage height shall not exceed 15 ft (4.57 m).
(3) Ceiling height shall not exceed 25 ft (7.62 m) in the protected area.
(4) Gondola rack structure shall not exceed 60 in. (1.52 m) in aggregate depth or 8 ft (2.44 m) in height.
(5) A perforated metal deck at the 8 ft (2.44 m) level shall be permissible with storage placed on top with or without flue spaces to a maximum height from floor of 15 ft (4.57 m).
(6) Rack lengths shall not exceed 70 ft (21.3 m).
(7) A minimum aisle space of 6 ft (1.83 m) shall be provided.

20.3.4 A wet pipe system designed to meet two separate design points — 0.45 gpm/ft^2 (17.3 mm/min) density over 2000 ft^2 (186 m^2) and 0.55 gpm/ft^2 (22.4 mm/min) density for the four hydraulically most demanding sprinklers with 500 gpm (1900 L/min) hose stream allowance for a 2-hour duration — shall be permitted without the use of in-rack sprinklers when the following conditions are met:

(1) An extended coverage sprinkler with a nominal K-factor of K-25.2 (360) listed for storage occupancies shall be provided.
(2) Storage height shall not exceed 15 ft (4.57 m).
(3) Ceiling height shall not exceed 25 ft (7.62 m).
(4) Shelving structure shall not exceed 48 in. (1.22 mm) aggregate depth or 12 ft (3.66 m) in height.
(5) Shelving shall be permitted to be made of solid particleboard.
(6) A minimum aisle space of 3 ft (914 mm) shall be maintained.
(7) Shelving length shall be a maximum of 70 ft (21.3 m).

20.3.5 A wet pipe system designed to meet two separate design points — 0.38 gpm/ft^2 (15.5 mm/min) density over 2000 ft^2 (186 m^2) and 0.45 gpm/ft^2 (17.3 mm/min) density for the four hydraulically most demanding sprinklers with 500 gpm (1900 L/min) hose stream allowance for a 2-hour duration — shall be permitted without the use of in-rack sprinklers in steel retail sales floor shelving racks where the following conditions are met:

(1) An extended coverage sprinkler with a nominal K-factor of K-25.2 (360) listed for storage occupancies shall be provided.
(2) Storage height shall not exceed 14 ft (4.27 m).
(3) Ceiling height shall not exceed 20 ft (6.1 m).
(4) Solid metal shelving shall be permissible up to the 72 in. (1.83 mm) level and wire shelving shall be permissible up to the 10 ft (3.05 m) level.
(5) The solid metal shelving shall not exceed 66 in. (1.68 m) in aggregate depth with a 6 in. (152 mm) longitudinal flue between two 30 in. (762 mm) deep shelves.
(6) A minimum aisle space of 5 ft (1.52 m) shall be maintained.
(7) A minimum longitudinal flue of 6 in. (152 mm) shall be maintained.
(8) Rack length shall be a maximum of 70 ft (21.3 m).

20.3.6 A wet pipe system designed to meet two separate design points — 0.49 gpm/ft^2 (20 mm/min) density over 2000 ft^2 (186 m^2) and 0.55 gpm/ft^2 (22.4 mm/min) density for the four hydraulically most demanding sprinklers with

Copyright 2014 National Fire Protection Association (NFPA). Licensed, by agreement, for individual use and download on October 4, 2014 to LEADER and READER for designated user PATTARAPORN SRITRAKOOL. No other reproduction or transmission in any form permitted without written permission of NFPA. For inquires or to report unauthorized use, contact licensing@nfpa.org.

500 gpm (1900 L/min) hose stream allowance for a 2-hour duration — shall be permitted without the use of in-rack sprinklers in retail solid shelved steel rack structure when the following conditions are met:

(1) An extended coverage sprinkler with a nominal K-factor of K-25.2 (360) listed for storage occupancies shall be provided.
(2) Storage height shall not exceed 16.5 ft (5.03 m).
(3) Ceiling height shall not exceed 22 ft (6.71 m).
(4) Shelving structure shall not exceed 51 in. (1.3 m) aggregate depth or 148 in. (3.76 m) in height.
(5) The intersection of perpendicular steel racks shall be permissible as long as no storage is placed within the void space at the junction of the racks.
(6) The top shelf shall be wire mesh.
(7) A minimum aisle width of 4 ft (1.22 m) shall be maintained between shelf units and other displays.

20.3.7 A sprinkler system with K-25.2 (360) ESFR sprinklers operating at a minimum pressure of 15 psi (1 bar) shall be permitted to protect single- and double-row racks with solid displays without the use of in-rack sprinklers in retail sales floor where the following conditions are met:

(1) Storage height shall not exceed 20 ft (6.1 m).
(2) Solid veneered particleboard/plywood displays shall be permissible, provided that all flues are maintained and only one display is installed per bay.
(3) A single display shall be permitted to have one or two solid horizontal or slanted members, and a solid back.
(4) Maximum roof height shall be 30 ft (9.14 m) in the protected area.
(5) Aisle widths shall be a minimum of 6 ft (1.8 m).
(6) Minimum transverse flue spaces of 3 in. every 10 ft (76 mm every 3.05 m) horizontally shall be provided.
(7) Minimum longitudinal flue spaces of 6 in. (152 mm) shall be provided for double-row racks.

20.4 Protection of Baled Cotton Storage.

20.4.1 General. The requirements of Chapter 12 shall apply unless modified by this chapter.

20.4.1.1 The total water supply available shall be sufficient to provide the recommended sprinkler discharge density over the area to be protected, plus a minimum of 500 gpm (1900 L/min) for hose streams.

20.4.1.2 Water supplies shall be capable of supplying the total demand for sprinklers and hose streams for not less than 2 hours.

20.4.2 Control Mode Density/Area Sprinkler Protection Criteria for Baled Cotton Storage.

20.4.2.1 For tiered or rack storage up to a nominal 15 ft (4.6 m) in height, sprinkler discharge densities and areas of application shall be in accordance with Table 20.4.2.1.

20.4.2.2 Where roof or ceiling heights would prohibit storage above a nominal 10 ft (3.1 m), the sprinkler discharge density shall be permitted to be reduced by 20 percent of that indicated in Table 20.4.2.1 but shall not be reduced to less than 0.15 gpm/ft^2 (6.1 mm/min).

20.5 Sprinkler Protection of Carton Records Storage with Catwalk Access.

20.5.1 Carton records storage shall be permitted to be protected in accordance with the succeeding subsections of Section 20.5.

Table 20.4.2.1 Baled Cotton Storage Up to and Including 15 ft (4.6 m)

System Type	Discharge Density (gpm/ft^2) per Area (ft^2)		
	Tiered Storage	Rack Storage	Untiered Storage
Wet	0.25/3000	0.33/3000	0.15/3000
Dry	0.25/3900	0.33/3900	0.15/3900

20.5.2 Carton records storage shall be permitted to be supported on shelving that is a minimum of 50 percent open from approved flue space to approved flue space.

20.5.2.1 Transverse flue spaces of a nominal 6 in. (152.4 mm) width shall be located at each rack upright.

20.5.2.2 Rack uprights shall be installed on a maximum of 10 ft 6 in. (3.2 m) centers.

20.5.2.3 Longitudinal flues shall not be required.

20.5.3 The storage rack structure for carton records storage shall consist of either of the following:

(1) A single-row rack not greater than 72 in. (1.8 m) deep
(2) Double-row racks having a total depth of not greater than 102 in. (2.6 m) aisle to aisle

20.5.3.1 Each storage rack shall be separated from other storage racks by aisles that are not less than 30 in. (0.75 m) and not more than 36 in. (0.9 m) in width.

20.5.3.2 Aisles used for ingress and egress shall be permitted to be up to 44 in. (1.1 m) wide when solid decking is used.

20.5.4 Catwalk aisles between racks shall be constructed of open metal grating that is at least 50 percent open.

20.5.4.1 Catwalk aisles at the ends of racks shall be permitted to be constructed of solid materials.

20.5.5 Catwalks shall be installed at a maximum of 12 ft (3.7 m) apart vertically.

20.5.6 Sprinkler Criteria.

20.5.6.1 Cartoned record storage in racks with access utilizing catwalks shall be protected in accordance with this subsection.

20.5.6.2 The design criteria for the ceiling sprinkler system shall be in accordance with Table 20.5.6.2.

20.5.6.2.1 Ceiling sprinklers spaced to cover a maximum of 100 ft^2 (9.3 m^2) shall be standard-response spray sprinklers with K-factors per Section 12.6.

20.5.6.3 Intermediate-level sprinklers shall be installed at each catwalk level in accordance with 20.5.6.3.1 through 20.5.6.3.4 and shall be quick-response, ordinary temperature, nominal K-5.6 (80), K-8.0 (115), or K-11.2 (160).

20.5.6.3.1 Intermediate-level sprinklers shall be installed in the center ±4 in. (102 mm) of each aisle below each catwalk level.

20.5.6.3.2 Intermediate-level sprinklers shall be installed a minimum 6 in. (150 mm) above the top of storage.

20.5.6.3.3 Sprinklers shall be supplied from the in-rack sprinkler system.

Copyright 2014 National Fire Protection Association (NFPA). Licensed, by agreement, for individual use and download on October 4, 2014 to LEADER and READER for designated user PATTARAPORN SRITRAKOOL. No other reproduction or transmission in any form permitted without written permission of NFPA. For inquires or to report unauthorized use, contact licensing@nfpa.org.

Table 20.5.6.2 Ceiling Sprinkler Design Criteria for Carton Record Storage

	Up to 25 ft High Storage		Over 25 ft High Storage	
	Ordinary Temperature	**High Temperature**	**Ordinary Temperature**	**High Temperature**
Density (gpm/ft^2)	0.33	0.29	0.3	0.4
Area (ft^2)	2000	2000	2000	2000
Hose Allowance (gpm)	500	500	500	500
Duration (hours)	2	2	2	2

For SI units, 1 gpm/ft^2 = 40.746 mm/min; 1 ft^2 = 0.09 m^2; 1 gpm = 3.785 L/min.

20.5.6.3.4 Spacing of sprinklers within the aisles shall be located so as to align with the transverse flues and the center of the storage unit when staggered and shall not exceed 10 ft 6 in. (3.2 m) on center.

20.5.6.3.5* Sprinklers installed below each catwalk level shall be staggered vertically and horizontally. *[See Figure A.20.5.6.3.5(a) and Figure A.20.5.6.3.5(b).]*

20.5.6.4 In-rack sprinklers shall be installed in the transverse flues at each catwalk level and shall be staggered vertically.

20.5.6.4.1 Sprinklers installed in the transverse flues shall be located not less than 18 in. (0.46 m) but not greater than 24 in. (0.61 m) from the face of the rack.

20.5.6.4.2 In-rack sprinklers shall be installed a minimum 6 in. (150 mm) above the top of storage.

20.5.6.4.3 Transverse flue sprinklers shall be quick-response, ordinary temperature, nominal K-5.6 (80), K-8.0 (115), or K-11.2 (160) and installed in accordance with Figure A.20.5.6.3.5(a) and Figure A.20.5.6.3.5(b).

20.5.6.5 For multiple-level catwalk systems, a minimum of 10 sprinklers, five on each of the top two levels, shall be calculated with a minimum flow rate of 30 gpm (113.6 L/min) per sprinkler. Calculated sprinklers shall be the hydraulically most demanding on each level.

20.5.6.5.1 For single-level catwalks, a minimum of six sprinklers shall be calculated with a minimum flow rate at 30 gpm (113.6 L/min) per sprinkler. Calculated sprinklers shall be the hydraulically most demanding.

20.5.6.5.2 The in-rack sprinkler system shall be balanced in with the ceiling system.

20.6 Compact Storage of Commodities Consisting of Paper Files, Magazines, Books, and Similar Documents in Folders and Miscellaneous Supplies with No More Than 5 Percent Plastics Up to 8 ft (2.44 m) High.

20.6.1* Compact storage modules up to 8 ft (2.44 m) high storing commodities consisting of paper files, magazines, books, and similar documents in folders and miscellaneous supplies with no more than 5 percent plastics shall be permitted to be classified as light hazard.

20.6.2 The top of the compact storage module shall be at least 18 in. (457 mm) below the sprinkler deflector.

20.6.3 Sprinklers shall be ordinary temperature, quick-response, standard spray upright or pendent.

20.6.4 The compact storage module shall be provided with minimum solid steel 24 gauge metal longitudinal barriers installed every third carriage.

20.6.5* Solid 24 gauge metal transverse barriers shall be spaced not more than 4 ft (1.2 m) apart.

20.6.6 Compact storage module sizes shall not exceed 250 ft^2 (23.2 m^2).

20.6.6.1 The size of a module shall be defined as the area of compact storage bound by the length of the carriages times the distance between longitudinal barriers or to the outward edge of a fixed storage unit in the module, including the width of the aisle in the module.

20.6.6.2 The lengths of the carriages shall be measured to the end of the carriages enclosed by solid metal transverse panels and separated by a minimum 28 in. (0.7 m) aisle to a storage unit perpendicular to the carriage.

20.7 Protection of High Bay Records Storage.

20.7.1* Mobile High Bay Records Storage. The requirements in this section shall be permitted to apply to ceiling-only sprinkler protection of paper products, including paper files, magazines, books, and similar paper documents in corrugated containers either closed or open top, to include corrugated totes, with no more than 5 percent plastics stored in mobile shelving units greater than 12 ft (3.7 m) and up to 34 ft (10.4 m) high and up to 30 shelving units (storage tiers) high, when the shelving unit structure meets all of the requirements in 20.7.3.

20.7.2 Fixed High Bay Records Storage. High bay record storage shall be permitted to be fixed in place when meeting the limitations of 20.7.1 and 20.7.3.

20.7.3 A wet pipe sprinkler system with nominal K-25.2 (360) ESFR sprinklers operating at a minimum of 40 psi (2.8 bar) shall be provided. The shelving units shall be subject to the following limitations:

(1) Back-to-back storage shelving units each no greater than 36 in. (914 mm) deep separated by longitudinal flue space not less than 6 in. (152 mm) wide.
(2) Solid steel shelving units not exceeding 54 in. (1372 mm) wide separated by steel barriers mechanically fastened to upright steel framing that forms a transverse flue space not less than 3 in. (76 mm) wide.
(3) Upright steel framing not completely blocking transverse flue space between adjacent shelving units.
(4) Noncombustible shelving backstops and side shelf supports, also referred to as side box guides, projecting not less than 3 in. (76 mm) above the shelves and that prevent stored commodities from encroaching into transverse and longitudinal flue spaces.
(5) Solid steel shelving not greater than 18 in. (457 mm) on centers vertically.

Copyright 2014 National Fire Protection Association (NFPA). Licensed, by agreement, for individual use and download on October 4, 2014 to LEADER and READER for designated user PATTARAPORN SRITRAKOOL. No other reproduction or transmission in any form permitted without written permission of NFPA. For inquires or to report unauthorized use, contact licensing@nfpa.org.

(6) Solid steel tops over top shelving units except at tops of transverse and longitudinal flue spaces.
(7) Open-ended, hollow tubular steel vertical (upright) shelving columns at top of shelving system.
(8) Shelving system framing and power tracks not exceeding 3 in. (76 mm) in width and not less than 1 ft (0.305 m) on centers and not less than 6 in. (152 mm) below sprinkler deflectors.
(9) Minimum clearance of 36 in. (914 mm) above top solid steel cover over top storage shelf to the sprinkler deflector.
(10) Mobile shelving systems arranged to shift automatically to a uniform nominal 6 in. (152 mm) clearance clear space between mobile carriages supporting back-to-back shelving units. Systems shall be arranged to initiate the shifting 60 seconds after activation of ceiling-mounted smoke detectors or upon sprinkler flow, whichever is first. Shelving system carriage electrical motors shall be listed and integral to the mobile carriage systems for normal functions and shall not be required to have emergency power back-up.

Chapter 21 Alternative Sprinkler System Designs for Chapters 12 Through 20

21.1* General.

21.1.1 Sprinklers intended to protect storage fire risks shall be permitted to be installed using water supply design criteria that are different from the design criteria specified for the sprinklers described in Chapters 12 through 20 when specifically listed for such use within the limitations described in this chapter.

21.1.2 The requirements of Chapters 12 through 20 shall apply unless modified by this chapter.

21.1.3 The in-rack protection requirements of Chapters 12 through 20 shall apply when storage racks are equipped with solid shelves and in-rack sprinklers are required per the applicable chapter.

21.1.4 The requirements of the applicable chapter shall apply when ceiling-only protection options are not available per this chapter.

21.1.5 The design criteria in this chapter shall not be used to permit a reduction in the water supply requirements for in-rack sprinkler protection.

21.1.6 A series of large-scale fire tests involving challenging test scenarios that address the range of variables associated with the intended application of the sprinkler shall be conducted to evaluate the ability of the sprinkler to protect storage fire risks that are representative of those described in the manufacturer's installation and design parameter instructions and referenced in the listing.

21.1.7 The manufacturer's installation and design parameter instructions for these sprinklers shall specify in a standardized manner the end-use limitations and sprinkler system design criteria including at least the following:

(1) Commodity or commodities to be protected
(2) Storage arrangements allowed
(3) Installation guidelines including obstruction and ceiling construction limitations
(4) Maximum ceiling and storage heights with associated minimum operating pressures and number of sprinklers required to be included in the hydraulic calculation
(5) Hose stream allowance and duration

21.1.8 The number of sprinklers to be used in the sprinkler system design shall be based on the worst-case result obtained from the full-scale fire test series increased by a minimum 50 percent.

21.1.8.1 Regardless of the number of sprinklers that operated during the worst-case full-scale fire test, the number in the sprinkler system demand shall be no less than one of the following:

(1) Twelve sprinklers for standard coverage sprinklers
(2) Eight sprinklers for extended-coverage sprinklers based on a spacing of 12 ft × 12 ft (3.7 × 3.7 m)
(3) Six sprinklers for extended-coverage sprinklers based on a spacing of 14 ft × 14 ft (4.3 m × 4.3 m)

21.1.8.2 Once the number of sprinklers for a demand area has been established, the minimum operating area, based on the proposed sprinkler spacing, shall not be less than 768 ft^2 (71 m^2).

21.2* Sprinkler Protection Criteria for Palletized, Solid-Piled, Bin Box, Shelf, or Back-to-Back Shelf Storage of Class I Through Class IV and Plastic Commodities.

21.2.1 Protection of palletized and solid-piled storage of Class I through Class IV and cartoned nonexpanded plastic commodities shall be permitted to be protected in accordance with Table 21.2.1.

21.2.2 Protection of palletized and solid-piled storage of Class I through Class IV and plastic commodities shall be permitted to be protected in accordance with Table 21.2.2.

21.3* Sprinkler Protection Criteria for Open-Frame Rack Storage of Class I Through Class IV and Plastic Commodities.

21.3.1 Protection of single-, double-, and multiple-row racks without solid shelves of Class I through Class IV and cartoned nonexpanded plastic commodities shall be permitted to be protected in accordance with Table 21.3.1.

21.3.2 Protection of open-frame rack storage of Class I through Class IV and plastic commodities shall be permitted to be protected in accordance with Table 21.3.2.

21.4 Hose Stream Allowance and Water Supply Duration.

21.4.1 The minimum water supply requirements for a hydraulically designed occupancy hazard fire control sprinkler system shall be determined by adding the hose stream allowance from Table 21.4.1 to the water supply for sprinklers obtained from this chapter.

21.4.1.1 The water supply requirements for a hydraulically designed occupancy hazard fire control sprinkler system shall be available for the minimum duration specified in Table 21.4.1.

21.5 Minimum Obstruction Criteria.

21.5.1 General. The installation guidelines for obstructions to ceiling-level sprinklers shall be in accordance with the requirements of Section 21.5 for sprinkler system designs obtained from this chapter.

21.5.2 Standard Coverage Spacing Sprinklers.

21.5.2.1 Sprinklers having standard coverage areas requiring up to 20 sprinklers to be included in the hydraulic calculation shall be installed in accordance with the obstruction criteria described in 8.12.5, unless large-scale fire testing is conducted with a representative obstruction below the sprinkler that demonstrates equivalent performance.

Copyright 2014 National Fire Protection Association (NFPA). Licensed, by agreement, for individual use and download on October 4, 2014 to LEADER and READER for designated user PATTARAPORN SRITRAKOOL. No other reproduction or transmission in any form permitted without written permission of NFPA. For inquires or to report unauthorized use, contact licensing@nfpa.org.

Table 21.2.1 Extended Coverage, CMSA [K-factor 25.2 (360) Pendent] Sprinkler Design Criteria for Palletized and Solid-Piled Storage of Class I Through Class IV and Cartoned Unexpanded Plastic Commodities

Storage Arrangement	Commodity Class	Maximum Storage Height		Maximum Ceiling/Roof Height		K-Factor/ Orientation	Type of System	Number of Design Sprinklers	Minimum Operating Pressure	Maximum Coverage Area	Hose Stream Allowance	Water Supply Duration (minutes)
		ft	m	ft	m							
Palletized and solid piled	Class I through IV and cartoned nonexpanded plastics	25	7.6	30	9.1	25.2 (360) Pendent	Wet	6	30 psi (2.1 bar)	14 ft × 14 ft (4.3 m × 4.3 m)	250 gpm (950 L/min)	60
		30	9.1	35	10.6	25.2 (360) Pendent	Wet	8	40 psi (2.8 bar)	12 ft × 12 ft (3.7 m × 3.7 m)		60

Table 21.2.2 Palletized, Solid-Piled, Bin Box, Shelf, or Back-to-Back Shelf Storage of Class I Through Class IV and Cartoned Unexpanded Plastic Commodities

Storage Arrangement	Commodity Class	Maximum Storage Height		Maximum Ceiling/Roof Height		K-Factor/ Orientation	Type of System	Number of Design Sprinklers	Minimum Operating Pressure	Maximum Coverage Area	Hose Stream Allowance	Water Supply Duration (hours)
		ft	m	ft	m							
Palletized, solid-piled, bin box, shelf, or back-to-back shelf storage	Class I through Class IV, encapsulated and unencapsulated, and cartoned nonexpanded plastics	20	6.1	30	9.1	25.2 (360) Upright/ pendent	Wet	6	30 psi (2.1 bar)	12 ft × 12 ft (3.7 m × 3.7 m) 144 ft^2 (13.4 m^2)	250 gpm (950 L/min)	1
		20	6.1	30	9.1	25.2 (360) Upright/ pendent	Wet	6	30 psi (2.1 bar)	14 ft × 14 ft (4.3 m × 4.3 m) 196 ft^2 (18.2 m^2)	250 gpm (950 L/min)	1
		25	7.6	30	9.1	25.2 (360) Upright/ pendent	Wet	6	30 psi (2.1 bar)	12 ft × 12 ft (3.7 m × 3.7 m)	250 gpm (950 L/min)	1
		25	7.6	30	9.1	25.2 (360) Upright/ pendent	Wet	6	30 psi (2.1 bar)	14 ft × 14 ft (4.3 m × 4.3 m) 196 ft^2 (18.2 m^2)	250 gpm (950 L/min)	1
		25	7.6	35	11	25.2 (360) Upright/ pendent	Wet	8	40 psi (2.8 bar)	12 ft × 12 ft (3.7 m × 3.7 m) 144 ft^2 (13.4 m^2)	250 gpm (950 L/min)	1
		25	7.6	35	11	25.2 (360) Upright	Wet	8	40 psi (2.8 bar)	14 ft × 14 ft (4.3 m × 4.3 m) 196 ft^2 (18.2 m^2)	500 gpm (1900 L/min)	1.5
		30	9.1	35	11	25.2 (360) Upright/ pendent	Wet	8	40 psi (2.8 bar)	12 ft × 12 ft (3.7 m × 3.7 m) 144 ft^2 (13.4 m^2)	250 gpm (950 L/min)	1
		30	9.1	35	11	25.2 (360) Upright	Wet	8	40 psi (2.8 bar)	14 ft × 14 ft (4.3 m × 4.3 m) 196 ft^2 (18.2 m^2)	500 gpm (1900 L/min)	1.5

Copyright 2014 National Fire Protection Association (NFPA). Licensed, by agreement, for individual use and download on October 4, 2014 to LEADER and READER for designated user PATTARAPORN SRITRAKOOL. No other reproduction or transmission in any form permitted without written permission of NFPA. For inquires or to report unauthorized use, contact licensing@nfpa.org.

Table 21.3.1 Extended Coverage, CMSA [K-Factor 25.2 (360) Pendent] Sprinkler Design Criteria for Single-, Double-, and Multiple-Row Racks Without Solid Shelves of Class I Through Class IV and Cartoned Unexpanded Plastic Commodities

Storage Arrangement	Commodity Class	Maximum Storage Height		Maximum Ceiling/Roof Height		K-Factor/ Orientation	Type of System	Number of Design Sprinklers	Minimum Operating Pressure	Maximum Coverage Area	Hose Stream Allowance	Water Supply Duration (minutes)
		ft	m	ft	m							
Single-, double-, and multiple-row racks without solid shelves (no open-top containers)	Class I through IV and cartoned nonexpanded plastics	25	7.6	30	9.1	25.2 (360) Pendent	Wet	6	30 psi (2.1 bar)	14 ft × 14 ft (4.3 m × 4.3 m)	250 gpm (950 L/min)	60
		30	9.1	35	10.6	25.2 (360) Pendent	Wet	8	40 psi (2.8 bar)	12 ft × 12 ft (3.7 m × 3.7 m)		60

Table 21.3.2 Sprinkler Protection Criteria for Open-Frame Rack Storage of Class I Through Class IV and Cartoned Unexpanded Plastic Commodities

Storage Arrangement	Commodity Class	Maximum Storage Height		Maximum Ceiling/Roof Height		K-Factor/ Orientation	Type of System	Number of Design Sprinklers	Minimum Operating Pressure	Maximum Coverage Area	Hose Stream Allowance	Water Supply Duration (hours)
		ft	m	ft	m							
Sprinkler protection criteria for open-frame rack storage	Class I through Class IV, encapsulated and unencapsulated, and cartoned nonexpanded plastics	20	6.1	30	9.1	25.2 (360) Upright/ pendent	Wet	6	30 psi (2.1 bar)	12 ft × 12 ft (3.7 m × 3.7 m) 144 ft^2 (13.4 m^2)	250 gpm (950 L/min)	1
		20	6.1	30	9.1	25.2 (360) Upright/ pendent	Wet	6	30 psi (2.1 bar)	14 ft × 14 ft (4.3 m × 4.3 m) 196 ft^2 (18.2 m^2)	250 gpm (950 L/min)	1
		25	7.6	30	9.1	25.2 (360) Upright/ pendent	Wet	6	30 psi (2.1 bar)	12 ft × 12 ft (3.7 m × 3.7 m) 144 ft^2 (13.4 m^2)	250 gpm (950 L/min)	1
		25	7.6	30	9.1	25.2 (360) Upright/ pendent	Wet	6	30 psi (2.1 bar)	14 ft × 14 ft (4.3 m × 4.3 m) 196 ft^2 (18.2 m^2)	250 gpm (950 L/min)	1
		25	7.6	35	11	25.2 (360) Upright/ pendent	Wet	8	40 psi (2.6 bar)	12 ft × 12 ft (3.7 m × 3.7 m) 144 ft^2 (13.4 m^2)	250 gpm (950 L/min)	1
		25	7.6	35	11	25.2 (360) Upright	Wet	8	40 psi (2.6 bar)	14 ft × 14 ft (4.3 m × 4.3 m) 196 ft^2 (18.2 m^2)	500 gpm (1900 L/min)	1.5
		30	9.1	35	11	25.2 (360) Upright/ pendent	Wet	8	40 psi (2.6 bar)	12 ft × 12 ft (3.7 m × 3.7 m) 144 ft^2 (13.4 m^2)	250 gpm (950 L/min)	1
		30	9.1	35	11	25.2 (360) Upright	Wet	8	40 psi (2.6 bar)	14 ft × 14 ft (4.3 m × 4.3 m) 196 ft^2 (18.2 m^2)	500 gpm (1900 L/min)	1.5

Copyright 2014 National Fire Protection Association (NFPA). Licensed, by agreement, for individual use and download on October 4, 2014 to LEADER and READER for designated user PATTARAPORN SRITRAKOOL. No other reproduction or transmission in any form permitted without written permission of NFPA. For inquires or to report unauthorized use, contact licensing@nfpa.org.

Table 21.4.1 Hose Stream Allowance and Water Supply Duration

Sprinkler Type	Sprinkler Spacing Type	Number of Sprinklers in Design Area	Hose Stream Allowance		Water Supply Duration (minutes)
			gpm	L/min	
Control mode density/area and CMSA	Standard	Up to 12	250	950	60
		Over 12 to 15	500	1900	90
		Over 15 to 25	500	1900	120
		Over 25	500	1900	150
	Extended coverage	Up to 6	250	950	60
		Up to 8 (144 ft^2)	250	950	60
		Over 6 to 8	500	1900	90
		Over 8 to 12	500	1900	120
		Over 12	500	1900	150
ESFR	Standard	Up to 12	250	950	60
		Over 12 to 15	500	1900	90
		Over 15 to 25	500	1900	120
		Over 25	500	1900	150

21.5.2.2 Control mode density/area (CMDA) and CMSA sprinklers having standard coverage areas requiring more than 20 sprinklers in the design area shall be installed in accordance with the obstructions to sprinkler discharge criteria described in 8.11.5.

21.5.2.2.1 ESFR sprinklers having standard-coverage areas requiring more than 20 sprinklers in the design area shall be installed in accordance with the obstructions to sprinkler discharge criteria described in 8.12.5.

21.5.2.2.2 Other obstruction criteria shall be acceptable if large-scale fire testing is conducted with a representative obstruction below the sprinkler that demonstrates equivalent performance.

21.5.3 Extended Coverage Spacing Sprinklers.

21.5.3.1 Sprinklers having extended coverage areas requiring up to 10 sprinklers to be included in the hydraulic calculation shall be installed in accordance with the obstruction criteria described in 8.8.5.1, 8.12.5.2, and 8.12.5.3, unless large-scale fire testing is conducted with a representative obstruction below the sprinkler that demonstrates equivalent performance.

21.5.3.2 CMDA and CMSA sprinklers having extended coverage areas requiring more than 10 sprinklers in the design area shall be installed in accordance with the obstructions to sprinkler discharge criteria described in 8.11.5 and 8.8.5.1.

21.5.3.2.1 ESFR sprinklers having extended coverage areas requiring more than 10 sprinklers in the design area shall be installed in accordance with the obstructions to sprinkler discharge criteria described in 8.12.5.2 and 8.12.5.3.

21.5.3.2.2 Other obstruction criteria shall be acceptable if large-scale fire testing is conducted with a representative obstruction below the sprinkler that demonstrates equivalent performance.

21.5.3.2.3 When utilizing upright CMSA, CMDA, or ESFR sprinklers, any continuous obstruction 4 in. (100 mm) or less shall be permitted to be ignored.

Chapter 22 Special Occupancy Requirements

22.1 General.

22.1.1 Application.

22.1.1.1 In addition to the requirements of Chapter 8, Chapters 11 through 22, and Chapter 23, the following special occupancy requirements shall apply.

22.1.1.1.1 All provisions of design criteria in this standard, including design area increases and reductions, shall also apply to these special occupancy requirements.

22.1.1.2 Where the requirements of the reference standard differ from the requirements of this standard, the reference standard shall take precedence.

22.1.2 Definitions. For terms not defined in Chapter 3, the definitions of the reference standard shall apply.

22.2 Flammable and Combustible Liquids.

22.2.1 Design Requirements. Sprinkler system discharge criteria for the protection of flammable and combustible liquids shall comply with NFPA 30.

22.2.2 Installation Requirements. (Reserved)

22.3 Aerosol Products.

22.3.1 Design Requirements. Sprinkler system discharge criteria for the protection of aerosol products shall comply with NFPA 30B.

22.3.2 Installation Requirements. (Reserved)

22.4 Spray Application Using Flammable or Combustible Materials.

22.4.1 Design Requirements.

22.4.1.1* The automatic sprinkler system shall be a wet pipe system, a dry pipe system, a preaction system, or an open-head deluge system, whichever is most appropriate for the portion of the spray operation being protected. [**33:**9.4.1]

Copyright 2014 National Fire Protection Association (NFPA). Licensed, by agreement, for individual use and download on October 4, 2014 to LEADER and READER for designated user PATTARAPORN SRITRAKOOL. No other reproduction or transmission in any form permitted without written permission of NFPA. For inquires or to report unauthorized use, contact licensing@nfpa.org.

22.4.1.2 The automatic sprinkler system shall be designed for Extra Hazard (Group 2) occupancies as defined in NFPA 13.

Exception No. 1: For spray application of styrene cross-link thermoset resins, Section 17.3 of NFPA 33 shall apply.

Exception No. 2: Automatic sprinkler systems for powder coating operations shall be designed for Ordinary Hazard (Group 2), as defined in NFPA 13. [**33:**9.4.2]

22.4.1.3 The water supply shall be sufficient to supply all sprinklers likely to open in any one fire incident without depleting the available water for use in hose streams. [**33:**9.4.3]

22.4.1.4 Where sprinklers are installed to protect spray areas and mixing rooms only, water shall be permitted to be supplied from domestic water systems, provided the domestic supply can meet the design criteria of 22.4.1.2. [**33:**9.4.4]

22.4.1.5 The sprinkler system shall be controlled by a separate, listed indicating valve(s), operable from floor level. [**33:**9.4.5]

22.4.1.6 Automated liquid electrostatic spray application equipment that is unlisted shall be protected further by the following:

(1) In addition to meeting the requirements in 9.8.1 of NFPA 33, the optical flame detection system shall also activate one of the following over each zone in which fire has been detected:
   (a) An open head deluge system designed to discharge a minimum density of 24.4 mm/min (0.6 gpm/ft^2)
   (b) A carbon dioxide extinguishing system
   (c) A dry chemical extinguishing system
   (d) A gaseous agent extinguishing system

[**33:**9.8.2(1)]

22.4.1.7 A wet pipe sprinkler system shall also be provided throughout the spray booth. This system shall meet all the applicable requirements of NFPA 13 for Extra Hazard (Group 2) occupancies. [**33:**9.8.2(3)]

22.4.2* Installation Requirements.

22.4.2.1* Sprinkler systems protecting stacks or ducts shall meet all of the following requirements:

(1) Sprinklers shall be spaced no more than 3.7 m (12 ft) apart.
(2) If exhaust ducts are manifolded, a sprinkler shall be located in the manifold at the junction of each exhaust duct with the manifold.
(3) Sprinklers shall provide a minimum flow of 114 L/min (30 gpm) per head at a minimum of 1 bar (15 psi) pressure.
(4) Sprinklers shall be ordinary temperature rated, unless required to be higher due to operating temperatures measured in the ducts, in which case the operating temperature shall be at least 28°C (50°F) above the inside temperature of the duct.

[**33:**9.4.6]

22.4.2.1.1 Stacks and exhaust ducts shall be provided with access openings for inspection and cleaning of sprinklers. [**33:**9.4.6.1]

22.4.2.1.2 Sprinkler systems protecting stacks and ducts that are subject to freezing shall be of a nonfreezing type or be a manually controlled open-head system. [**33:**9.4.6.2]

22.4.2.2 Sprinklers shall be protected against overspray residue, either by location or covering, so that they will operate quickly in event of fire. [**33:**9.4.7]

22.4.2.2.1 Sprinklers shall be permitted to be covered only by cellophane bags having a thickness of 0.08 mm (0.003 in.) or less or by thin paper bags. These coverings shall be replaced frequently so that heavy deposits of residue do not accumulate. [**33:**9.4.7.1]

22.4.2.2.2 Sprinklers that have been painted or coated by overspray or residues shall be replaced with new sprinklers. [**33:**9.4.7.2]

22.5 Solvent Extraction Plants. [NFPA 36]

22.5.1* Design Requirements.

22.5.2 Installation Requirements. (Reserved)

22.6 Installation and Use of Stationary Combustion Engines and Gas Turbines.

22.6.1* Design Requirements. Automatic sprinkler systems shall be designed to provide for a density of 0.3 gpm/ft^2 (12.2 mm/min) over the most remote 2500 ft^2 (230 m^2). [**37:**11.4.5.1]

22.6.2 Installation Requirements.

22.6.2.1 Sprinklers and spray nozzles shall be spaced at a 100 ft^2 (9 m^2) maximum area of coverage per sprinker or spray nozzle. [**37:**11.4.5.1.1]

22.6.2.2 Sprinkler and water spray system coverage shall be provided to all areas within the enclosure located within 20 ft (6 m) of the following:

(1) The engine
(2) The lubricating oil system
(3) The fuel system

[**37:**11.4.5.1.2]

22.6.2.3 Sprinklers and water spray nozzles shall not be directed at engine components that are susceptible to thermal shock or deformation. [**37:**11.4.5.2]

22.7 Nitrate Film.

22.7.1 Design Requirements.

22.7.1.1 Every room, except projection booths and rewinding rooms, where nitrate film is stored or handled in quantities greater than 51 lb (23 kg), or 10 standard rolls, shall be protected by an automatic sprinkler system that is installed in accordance with the requirements for Group II extra hazard occupancies. [**40:**5.1.2]

22.7.1.2 Water supplies for automatic sprinklers shall be based on 20 gpm (1.26 L/sec) per sprinkler for 20 minutes for the total number of sprinklers in one vault plus 25 percent of the sprinklers in the communicating fire area. [**40:**5.2.2]

22.7.1.3* Vaults Other Than Extended Term Storage Vaults. [**40:**6.3] *(See Figure A.22.7.1.3.)* Fire protection in vaults shall be provided by a deluge system with directional nozzles meeting the criteria in 22.7.1.4. [**40:**6.3.7]

22.7.1.4 For extended term storage vaults in accordance with Section 6.5.5 of NFPA 40, fire protection shall be provided by a deluge system with directional nozzles installed in accordance with NFPA 15 and meeting the criteria in 22.7.1.5 through 22.7.1.11. [**40:**6.5.6]

Copyright 2014 National Fire Protection Association (NFPA). Licensed, by agreement, for individual use and download on October 4, 2014 to LEADER and READER for designated user PATTARAPORN SRITRAKOOL. No other reproduction or transmission in any form permitted without written permission of NFPA. For inquires or to report unauthorized use, contact licensing@nfpa.org.

22.7.1.5 Sprinkler systems in existing extended term storage vaults that were in compliance with the provisions of this standard at the time of installation shall be permitted to be continued in use. [**40:**6.5.6.1]

22.7.1.6 High-velocity open head nozzles each capable of providing a discharge rate of 1.26 L/sec (20 gpm) at a gauge pressure of 345 kPa (50 psi) shall be installed. [**40:**6.5.6.2]

22.7.1.7 The design shall be based on a discharge density of 28 mm/min (0.68 gpm/ft^2) over each face of storage racks. [**40:**6.5.6.3]

22.7.1.8* The nozzles shall have a combined spray pattern capable of covering the face of the film storage racks. [**40:**6.5.6.4]

22.7.1.9 The nozzles shall be installed at the top of the storage shelf array, aimed at the opposite shelf array. [**40:**6.5.6.5]

22.7.1.10* Nozzles shall be installed on opposite faces of the storage shelf array in a staggered pattern such that no nozzles are directly opposite one another. [**40:** 6.5.6.6]

22.7.1.11 The water supply duration shall be a minimum of 20 minutes. [**40:**6.5.6.7]

22.7.1.12 The deluge system shall be activated by a signal from one of the following: [**40:**6.5.6.8]

(1) An air sampling–type smoke detection system
(2) A fixed temperature heat sensitive cable

22.7.2 Installation Requirements.

22.7.2.1 In areas or rooms where nitrate film is handled, the area that is protected per sprinkler head shall not exceed 64 ft^2 (6 m^2) with sprinklers not being more than 8 ft (2.4 m) apart. [**40:**5.1.4]

22.7.2.2 Cabinet Protection. [**40:**6.2.5]

22.7.2.2.1 Cabinets having a capacity of more than 34 kg (75 lb), or 15 standard rolls, of film shall be provided with at least one automatic sprinkler head. [**40:**6.2.5.1]

22.7.2.2.2 Where cans are stored on more than one shelf, as shown in Figure 22.7.2.2.2 and as described in 6.2.6.2 or 6.2.6.3 of NFPA 40, one sprinkler shall be provided for each shelf. [**40:**6.2.5.2]

22.7.2.3 Motion Picture Film Laboratories. In all cases, sprinklers shall be arranged so that not more than two machines are protected by any one sprinkler head. [**40:**9.2.5.2]

22.8 Laboratories Using Chemicals.

22.8.1 Design Requirements. Automatic sprinkler system protection shall be required for all new laboratories in accordance with the following:

(1) Automatic sprinkler system protection for Class A and Class B laboratories shall be in accordance with NFPA 13 for ordinary hazard (Group 2) occupancies.
(2) Automatic sprinkler system protection for Class C and Class D laboratories shall be in accordance with NFPA 13 for ordinary hazard (Group 1) occupancies.

[**45:**6.2.1.1]

22.8.2 Installation Requirements. Fire sprinklers in laboratory units shall be the quick response (QR) sprinkler type installed in accordance with NFPA 13. [**45:**6.2.1.2]

22.9 Oxygen-Fuel Gas Systems for Welding, Cutting, and Allied Processes.

22.9.1 Design Requirements.

22.9.1.1 The total gas capacity of nonliquefied flammable gas (e.g., acetylene) shall be permitted to be increased to 56.6 m^3 (2000 ft^3) per control area under one of the following conditions:

(1) In cylinder storage areas that are protected by an automatic sprinkler system and water supply designed in accordance with NFPA 13, furnishing a sprinkler discharge density of at least (10 L/min)/m^2 [(0.25 gal/min)/ft^2] over a minimum operating area of at least 279 m^2 (3000 ft^2) with sprinklers located not more than 6.1 m (20 ft) above the floor where the cylinders are stored.
(2) In cylinder storage areas that are protected by an automatic water spray fixed system of equal density, designed in accordance with NFPA 15

22.9.1.2 Oxygen cylinders connected to one manifold shall be limited to a total gas capacity of 42.5 m^3 (1500 ft^3). Two such manifolds with connected cylinders shall be permitted to be located in the same room, provided the building is protected throughout with an approved automatic sprinkler system designed in accordance with NFPA 13, furnishing a sprinkler discharge density of at least (10 L/min)/m^2 [(0.25 gal/min)/ft^2] over a minimum operating area of at least 279 m^2 (3000 ft^2) with sprinklers located not more than 6.1 m (20 ft) above the floor where the manifolds are located.

22.9.2 Installation Requirements.

22.9.2.1 In buildings protected by an automatic sprinkler system and water supply designed in accordance with NFPA 13 for an ordinary hazard or more hazardous occupancy, where the occupancy other than the cylinder storage is not more hazardous than ordinary hazard as defined in NFPA 13, the distance between designated storage areas shall be permitted to be reduced to 15.2 m (50 ft). If the occupancy in such protected buildings between the designated storage areas is free of combustible material, the distance shall be permitted to be reduced to 7.6 m (25 ft).

22.10 Acetylene Cylinder Charging Plants.

22.10.1 Design Requirements.

22.10.1.1 When sprinkler protection is provided, the area in which flammable compressed gases are stored or used shall be protected with a sprinkler system designed to be not less than that required by NFPA 13 for Extra Hazard Group 1 with a minimum design area of 2500 ft^2 (232.26 m^2). [**51A:**11.2.1.2]

22.10.2 Installation Requirements. (Reserved)

22.11 Compressed Gases and Cryogenic Fluids Code.

22.11.1 Design Criteria.

22.11.1.1 When sprinkler protection is required, the area in which compressed gases or cryogenic fluids are stored or used shall be protected with a sprinkler system designed to be not less than that required by NFPA 13 for Ordinary Hazard Group 2. [**55:**6.10.2.1]

22.11.1.2 When sprinkler protection is required, the area in which the flammable or pyrophoric compressed gases or cryogenic fluids are stored or used shall be protected with a sprinkler system designed to be not less than that required by NFPA 13 for Extra Hazard Group 1. [**55:**6.10.2.2]

Copyright 2014 National Fire Protection Association (NFPA). Licensed, by agreement, for individual use and download on October 4, 2014 to LEADER and READER for designated user PATTARAPORN SRITRAKOOL. No other reproduction or transmission in any form permitted without written permission of NFPA. For inquires or to report unauthorized use, contact licensing@nfpa.org.

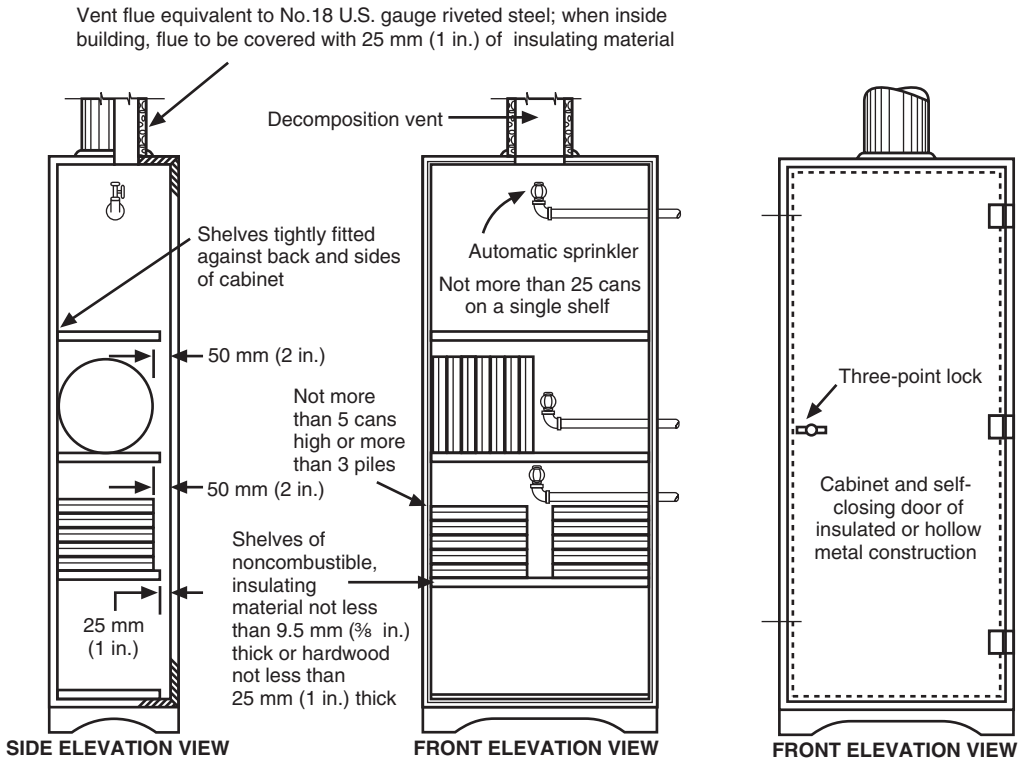

FIGURE 22.7.2.2.2 Standard Film Cabinet for Other Than Extended Term Storage Film. [40:Figure 6.2.1]

22.11.2 Installation Requirements. (Reserved)

22.12 Utility LP-Gas Plants.

22.12.1 Design Requirements.

22.12.1.1 The design of fire water supply and distribution systems, where used, shall provide for the simultaneous supply of those fixed fire protection systems involved in the maximum single incident expected in the plant, including monitor nozzles, at their design flow and pressure. [**59:**13.4.2]

22.12.1.2 An additional supply of 1000 gal/min (63 L/sec) shall be available for hand hose streams for a period of not less than 2 hours. [**59:**13.4.2.1]

22.12.1.3 Manually actuated monitors shall be permitted to be used to augment hand hose streams. [**59:**13.4.2.2]

22.12.2 Installation Requirements. (Reserved)

22.13 Production, Storage, and Handling of Liquefied Natural Gas (LNG).

22.13.1 Design Requirements. The fire water supply and distribution systems, if provided, shall simultaneously supply water to fixed fire protection systems, including monitor nozzles, at their design flow and pressure, involved in the maximum single incident expected in the plant plus an allowance of 1000 gpm (63 L/sec) for hand hose streams for not less than 2 hours. [**59A:**12.5.2]

22.13.2 Installation Requirements. (Reserved)

22.14 Protection of Information Technology Equipment.

22.14.1 Design Requirements. (Reserved)

22.14.2 Installation Requirements.

22.14.2.1* Information technology equipment rooms and information technology equipment areas located in a sprinklered building shall be provided with an automatic sprinkler system. [**75:**8.1.1]

22.14.2.2 Sprinkler systems protecting information technology equipment areas shall be valved separately from other sprinkler systems. [**75:**8.1.3]

22.14.2.3* An automatic sprinkler system or a gaseous fire extinguishing system shall be provided for the protection of the area below a raised floor in an information technology equipment room or information technology equipment area when one or more of the following exist:

(1) There is a critical need to protect data in the process, reduce equipment damage, and facilitate return to service.
(2) The area below the raised floor contains combustible material.

[**75:**8.1.1.2]

22.15 Standard on Incinerators, and Waste and Linen Handling Systems and Equipment.

22.15.1 Design Requirements. (Reserved)

22.15.2 Installation Requirements.

22.15.2.1 Automatic sprinklers shall be provided in incinerator rooms. [**82:**4.2.7.3]

Copyright 2014 National Fire Protection Association (NFPA). Licensed, by agreement, for individual use and download on October 4, 2014 to LEADER and READER for designated user PATTARAPORN SRITRAKOOL. No other reproduction or transmission in any form permitted without written permission of NFPA. For inquires or to report unauthorized use, contact licensing@nfpa.org.

22.15.2.2* Waste and Linen Chutes and Transport Systems. [**82:**5]

22.15.2.2.1 Gravity Waste or Linen Chutes. [**82:**5.2]

22.15.2.2.1.1 Gravity chutes shall be protected internally by automatic sprinklers unless they are lined in accordance with 5.2.2.6.1 in NFPA 82. [**82:**5.2.2.6.2; **82:**5.2.6.1.1]

22.15.2.2.1.2 This protection requires that a sprinkler be installed at or above the top service opening of the chute. [**82:**5.2.6.1.2]

22.15.2.2.1.3 Chute Sprinkler Protection. Automatic sprinklers installed in gravity chute service openings shall be recessed out of the chute area through which the material travels. [**82:**5.2.6.1.3]

22.15.2.2.1.4 In addition, a sprinkler shall be installed within the chute at alternate floor levels in buildings over two stories in height, with a mandatory sprinkler located at the lowest service level. [**82:**5.2.6.1.4]

22.15.2.2.1.5 Chute Room Automatic Sprinklers. Automatic sprinklers shall be installed in chute terminal rooms. [**82:**5.2.6.2.1]

22.15.2.2.2 Full Pneumatic Waste and Linen Conveying Systems. [**82**:5.3]

22.15.2.2.2.1 Full pneumatic-type risers shall be protected internally by automatic sprinklers. [**82:**5.3.4.1]

22.15.2.2.2.2 A sprinkler shall be required at or above the top loading station and at alternate floor levels in buildings over two stories in height, with a mandatory sprinkler located at the lowest loading station. [**82:**5.3.4.2]

22.15.2.2.2.3 Sprinklers shall be recessed out of the station area through which the material travels. [**82:**5.3.4.3]

22.15.2.2.3 Gravity Pneumatic Trash or Linen Conveying Systems. [**82:**5.4]

22.15.2.2.3.1 Chute Automatic Sprinklers. Where material is to be stored at the bottom of the chute and above the riser discharge damper (above the transport tee), automatic sprinklers shall be installed below the last service door on the chute. [**82:**5.4.2.3]

22.15.2.2.3.2 Automatic sprinklers shall be installed in chute discharge rooms. [**82:**5.4.2.4.3]

22.15.2.3 Waste Handling Systems.

22.15.2.3.1 Automatic sprinklers shall be installed in rooms where waste handling systems and equipment are used to transport waste from interim storage areas to waste processing equipment, such as incinerators. [**82:**6.4.1]

22.15.2.3.2 In locations or rooms where waste handling systems and equipment are used for interim storage of waste only, the rooms shall be sprinklered in accordance with requirements specified in 22.15.2.4. [**82:**6.4.2]

22.15.2.4 Waste Compactors. [**82:**7]

22.15.2.4.1 All chute-fed compactors shall have an automatic sprinkler with a minimum 13 mm (½ in.) orifice installed in the hopper of the compactor. [**82:**7.2.1]

22.15.2.4.2 Sprinklers shall be ordinary temperature-rated sprinklers. [**82:**7.2.1.1]

22.15.2.4.3 Sprinklers shall be supplied by a minimum of 1 in. (25.4 mm) ferrous piping or ¾ in. (19 mm) copper tubing line from the domestic cold water supply or by the building fire sprinkler system. [**82:**7.2.1.2]

22.15.2.4.4 Sprinkler water pipe shall be protected from freezing in outdoor installations. [**82:**7.2.1.3]

22.15.2.4.5 Hand-fed compactors located within a building and not operated in conjunction with a chute shall not require installation of an automatic sprinkler in the hopper. [**82:**7.2.2]

22.15.2.5 Waste and recyclables storage rooms shall be provided with automatic sprinklers. [**82:**8.3]

22.15.2.6 Rooms in which waste processing equipment is located shall be installed with automatic sprinklers. [**82:**9.4.1]

22.16 Standard for Ovens and Furnaces.

22.16.1 Design Requirements. (Reserved)

22.16.2 Installation Requirements.

22.16.2.1* Where automatic sprinklers are provided, they shall be installed in accordance with NFPA 13, unless otherwise permitted by 22.16.2.2. [**86:**9.2.1]

22.16.2.2 Where sprinklers that protect only ovens are installed and connection to a reliable fire protection water supply is not feasible, a domestic water supply connection shall be permitted to supply these sprinklers subject to the approval of the authority having jurisdiction. [**86:**9.2.2]

22.16.2.3 Where sprinklers are selected for the protection of ovens, furnaces, or related equipment, the use of closed-head sprinkler systems shall be prohibited and only deluge sprinkler systems shall be used where the following conditions exist:

(1) In equipment where temperatures can exceed 625°F (329°C)
(2) Where flash fire conditions can occur

[**86:**9.3.3]

22.16.2.4 Furnaces shall be located so as to minimize exposure to power equipment, process equipment, and sprinkler risers. [**86:**5.1.3.1]

22.16.2.5 Where water from a fixed protection system could come in contact with molten materials, such as molten salt or molten metal, shielding shall be provided to prevent water from contacting the molten material. [**86:**9.3.1]

22.16.2.6* Galvanized pipe shall not be used in sprinkler or water spray systems in ovens, furnaces, or related equipment. [**86:**9.3.2]

22.17 Health Care Facilities Code, Hyperbaric Chambers.

22.17.1 Design Requirements.

22.17.1.1 A fixed water deluge extinguishing system shall be installed in all chamber compartments that are designed for manned operations. [**99:**14.2.5.2]

22.17.1.2 In chambers that consist of more than one chamber compartment (lock), the design of the deluge system shall meet the requirements of 22.17.1.1 when the chamber compartments are at different depths (pressures). [**99:**14.2.5.2.1]

22.17.1.3 The deluge system in different compartments (locks) shall operate independently or simultaneously. [**99:**14.2.5.2.2]

Copyright 2014 National Fire Protection Association (NFPA). Licensed, by agreement, for individual use and download on October 4, 2014 to LEADER and READER for designated user PATTARAPORN SRITRAKOOL. No other reproduction or transmission in any form permitted without written permission of NFPA. For inquires or to report unauthorized use, contact licensing@nfpa.org.

22.17.1.4 Fixed deluge systems shall not be required in chamber compartments that are used strictly as personnel transfer compartments (locks) and for no other purposes. [**99:**14.2.5.2.3]

22.17.1.5* Manual activation and deactivation deluge controls shall be located at the operator's console and in each chamber compartment (lock) containing a deluge system. [**99:**14.2.5.2.4]

22.17.1.6 Controls shall be designed to prevent unintended activation. [**99:**14.2.5.2.4.1]

22.17.1.7 Water shall be delivered from the fixed discharge nozzles as specified in 22.17.1.9 within 3 seconds of activation of any affiliated deluge control. [**99:**14.2.5.2.5]

22.17.1.8* Average spray density at floor level shall be not less than 2 gpm/ft^2 (81.5 L/min/m^2), with no floor area larger than 10.76 ft^2 (1 m^2) receiving less than 1 gpm/ft^2 (40.75 L/min/m^2). [**99:**14.2.5.2.6]

22.17.1.9 Water shall be available in the deluge system to maintain the flow specified in 22.17.1.8 simultaneously in each chamber compartment (lock) containing the deluge system for 1 minute. [**99:**14.2.5.2.7]

22.17.1.10 The limit on maximum extinguishment duration shall be governed by the chamber capacity (bilge capacity also, if so equipped) or its drainage system, or both. [**99:**14.2.5.2.7.1]

22.17.1.11 The deluge system shall have stored pressure to operate for at least 15 seconds without electrical branch power. [**99:**14.2.5.2.8]

22.17.2 Installation Requirements. (Reserved)

22.18 Fixed Guideway Transit and Passenger Rail Systems.

22.18.1 Design Requirements.

22.18.1.1 Other fire suppression systems, if approved, shall be permitted to be substituted for automatic sprinkler systems in the areas listed in 22.18.2.1. [**130:**5.7.3.4]

22.18.2 Installation Requirements.

22.18.2.1 An automatic sprinkler protection system shall be provided in areas of stations used for concessions, in storage areas, in trash rooms, and in the steel truss area of all escalators and other similar areas with combustible loadings, except trainways. [**130:**5.7.3.1]

22.18.2.2 Sprinkler protection shall be permitted to be omitted in areas of open stations remotely located from public spaces. [**130:**5.7.3.1.1]

22.18.2.3 Installation of sprinkler systems shall comply with NFPA 13 or applicable local codes as required. [**130:**5.7.3.2]

22.18.2.4 A sprinkler system waterflow alarm and supervisory signal service shall be installed. [**130:**5.7.3.3]

22.19 Motion Picture and Television Production Studio Soundstages, Approved Production Facilities, and Production Locations.

22.19.1 The requirements of NFPA 13 prohibiting obstructions to sprinkler discharge shall not be applicable if approved mitigation is employed. [**140:**4.11.1.3.1]

22.19.2 The requirements of NFPA 13 prohibiting obstructions to sprinkler discharge shall not be applicable if the building sprinkler system meets the design criteria for Extra Hazard, Group 2. [**140:**4.11.1.3.2]

22.19.3 In any production location building protected by an existing automatic sprinkler system, where solid- or hard-ceiling sets or platforms are introduced and create an obstruction to sprinkler discharge, the provisions of 22.19.4 or 22.19.5 shall be met. [**140:**5.11.3]

22.19.4* The requirements of NFPA 13 prohibiting obstructions to sprinkler discharge shall not be applicable if approved mitigation is employed. [**140:**5.11.4]

22.19.5* The requirements of NFPA 13 prohibiting obstructions to sprinkler discharge shall not be applicable if the building sprinkler system meets the design criteria for Extra Hazard, Group 2. [**140:**5.11.5]

22.20 Animal Housing Facilities.

22.20.1 Design Requirements.

22.20.1.1 (Reserved)

22.20.2 Installation Requirements. (Reserved)

22.20.2.1 Quick-response sprinklers shall be utilized in animal housing facilities. [**150:**9.2.3]

22.21 Water Cooling Towers.

22.21.1 Design Requirements.

22.21.1.1 Types of Systems.

22.21.1.1.1* Because the counterflow tower design lends itself to either closed- or open-head systems, the following systems shall be permitted to be used:

(1) Wet-pipe
(2) Dry-pipe
(3) Preaction
(4) Deluge

[**214:**5.2.2.1]

22.21.1.1.2* The open-head deluge system shall be used in crossflow towers to maximize the water distribution and heat detection activation. [**214:**5.2.2.2]

22.21.1.2 Minimum Rate of Application. [**214:**5.2.3]

22.21.1.2.1 Under the fan decks of counterflow towers, the rate of application of water shall be 0.5 gpm/ft^2 (20.4 mm/min), including fan opening. [**214:**5.2.3.1]

22.21.1.2.2 Under the fan decks of crossflow towers, the rate of application of water shall be 0.33 gpm/ft^2 (13.45 mm/min), including fan opening. [**214:**5.2.3.2]

22.21.1.2.3 Over the fill areas of crossflow towers, the rate of application of water shall be 0.5 gpm/ft^2 (20.4 mm/min). [**214:**5.2.3.3]

22.21.1.3 Extended Fan Decks. On towers having extended fan decks that completely enclose the distribution basin, the discharge outlets protecting the fill area shall be located over the basin, under the extension of the fan deck. [**214**:5.2.4.3]

22.21.1.3.1 These discharge outlets shall be open directional spray nozzles or other approved spray devices arranged to discharge 0.35 gpm/ft^2 (14.26 mm/min) directly on the distribution basin and 0.15 gpm/ft^2 (6.11 mm/min) on the underside of the fan deck extension. [**214:**5.2.4.3.1]

Copyright 2014 National Fire Protection Association (NFPA). Licensed, by agreement, for individual use and download on October 4, 2014 to LEADER and READER for designated user PATTARAPORN SRITRAKOOL. No other reproduction or transmission in any form permitted without written permission of NFPA. For inquires or to report unauthorized use, contact licensing@nfpa.org.

22.21.1.3.2 On towers having extended fan decks that do not completely enclose the hot-water basin, outlets protecting the fill shall be located under the distribution basin in accordance with 5.2.4.2.2 of NFPA 214. [**214:**5.2.4.3.2]

22.21.1.4 Combustible Fan Decks. For deluge systems using directional spray nozzles in the pendant position, provisions shall be made to protect the underside of a combustible fan deck at a minimum of 0.15 gpm/ft^2 (6.11 mm/min), which shall be included as part of the application rate specified in 5.2.3 of NFPA 214. [**214:**5.2.4.4]

22.21.1.5* Water Basin Covers. On film-filled towers that have solid, hot-water basin covers over the complete basin, the discharge outlets protecting the fill area shall be permitted to be located under the basin covers. [**214:**5.2.4.5]

22.21.1.5.1 These discharge outlets shall be open directional spray nozzles or other approved devices arranged to discharge 0.50 gpm/ft^2 (20.4 mm/min) into the distribution basin horizontally, with some of the spray splashing up and on the underside of the water basin covers. [**214:**5.2.4.5.1]

22.21.1.6 Exterior Protection. [**214:**5.2.10]

22.21.1.6.1 Where any combustible exterior surfaces of a tower, including the fan deck and distribution basins, are less than 100 ft (30.5 m) from significant concentrations of combustibles such as structures or piled material, the combustible exposed surfaces of the tower shall be protected by an automatic water spray system. [**214:**5.2.10.1]

22.21.1.6.2 Systems for exterior protection shall be designed with the same attention and care as interior systems. [**214:**5.2.10.2]

22.21.1.6.2.1 Pipe sizing shall be based on hydraulic calculations. [**214:**5.2.10.2.1]

22.21.1.6.2.2 Water supply and discharge rate shall be based on a minimum 0.15 gpm/ft^2 (6.11 mm/min) for all protected surfaces. [**214:**5.2.10.2.2]

22.21.1.7 Sprinkler System Water Supply.

22.21.1.7.1 Deluge Systems.

22.21.1.7.1.1* Where all cells of a cooling tower are protected by a single deluge system, the water supply shall be adequate to supply all discharge outlets on that system. [**214:**5.6.1.1]

22.21.1.7.1.2 Where two or more deluge systems are used to protect a cooling tower and fire-resistant partitions are not provided between the deluge systems, the water supply shall be adequate to supply all discharge outlets in the two most hydraulically demanding adjacent systems. [**214:**5.6.1.2]

22.21.1.7.1.3* Where two or more deluge systems are separated by fire-resistant partitions, the water supply shall be adequate to supply all discharge outlets in the single most hydraulically demanding system. [**214:**5.6.1.3]

22.21.1.7.2 Wet, Dry, and Preaction Systems.

22.21.1.7.2.1* Where each cell of the cooling tower is separated by a fire-resistant partition, the water supply shall be adequate to supply all discharge outlets in the hydraulically most demanding single cell. [**214:**5.6.2.1]

22.21.1.7.2.2* Where fire-resistant partitions are not provided between each cell of a cooling tower, the water supply shall be adequate to supply all discharge outlets in the two most hydraulically demanding adjoining cells. [**214:**5.6.2.2]

22.21.1.7.3 Hose Streams. Water supplies shall be sufficient to include a minimum of 500 gpm (1892.5 L/min) for hose streams in addition to the sprinkler requirements. [**214:**5.6.3]

22.21.1.7.4 Duration. A water supply adequate for at least a 2-hour duration shall be provided for the combination of the water supply specified in 5.6.1 or 5.6.2 of NFPA 214, plus the hose stream demand specified in 22.21.1.7.3. [**214:**5.6.4]

22.21.2 Installation Requirements.

22.21.2.1* Counterflow Towers. [**214:**5.2.4.1]

22.21.2.1.1 The discharge outlets shall be located under the fan deck and fan opening. [**214:**5.2.4.1.1]

22.21.2.1.2 Except under the fan opening, all discharge outlets shall have deflector distances installed in accordance with Section 8.5 of NFPA 13. [**214:**5.2.4.1.2]

22.21.2.1.3 Closed-head discharge outlets for dry-pipe and preaction systems shall be installed in the upright position only. [**214:**5.2.4.1.3]

22.21.2.2* Crossflow Towers. [**214:**5.2.4.2]

22.21.2.2.1 The discharge outlets protecting the plenum area shall be located under the fan deck and in the fan opening. [**214:**5.2.4.2.1]

22.21.2.2.2 Discharge outlets protecting the fill shall be located under the distribution basin on either the louver or drift eliminator side, discharging horizontally through the joist channels. [**214:**5.2.4.2.2]

22.21.2.2.3 Towers with an air travel dimension longer than the maximum allowable for the discharge device being used shall have discharge devices placed on both sides of the fill area in each joist channel. [**214:**5.2.4.2.3.1]

22.21.2.2.4 The pressure at each discharge device shall be adequate to provide protection for half of the length of the fill measured along the air travel. [**214:**5.2.4.2.3.2]

22.21.2.2.5 Where joist channels are wider than 2 ft (0.6 m), more than one discharge device shall be required per joist channel. [**214:**5.2.4.2.4.1]

22.21.2.2.6 If the discharge device being used is listed for the width of the joist channel being protected, one discharge device per joist channel shall be permitted to be used. [**214:**5.2.4.2.4.2]

22.21.2.3* Extended Fan Decks. On towers having extended fan decks that completely enclose the distribution basin, the discharge outlets protecting the fill area shall be located over the basin, under the extension of the fan deck. [**214:**5.2.4.3]

22.21.2.4 Combustible Fan Decks. For deluge systems using directional spray nozzles in the pendant position, provisions shall be made to protect the underside of a combustible fan deck at a minimum rate of 0.15 gpm/ft^2 (6.11 mm/min), which shall be included as part of the application rate specified in 22.21.1.2. [**214:**5.2.4.4]

22.21.2.5* Water Basin Covers. On film-filled towers that have solid, hot-water basin covers over the complete basin, the discharge outlets protecting the fill area shall be permitted to be located under the basin covers. [**214:**5.2.4.5]

22.21.2.5.1 These discharge outlets shall be open directional spray nozzles or other approved devices arranged to discharge 0.50 gpm/ft^2 (20.4 mm/min) into the distribution basin horizontally, with some of the spray splashing up and on the underside of the water basin covers. [**214:**5.2.4.5.1]

Copyright 2014 National Fire Protection Association (NFPA). Licensed, by agreement, for individual use and download on October 4, 2014 to LEADER and READER for designated user PATTARAPORN SRITRAKOOL. No other reproduction or transmission in any form permitted without written permission of NFPA. For inquires or to report unauthorized use, contact licensing@nfpa.org.

22.21.2.6 Valves. [**214:**5.2.6]

22.21.2.6.1 Shutoff valves and automatically operated water control valves, if provided, shall be located as follows:

(1) Outside the fire-exposed area
(2) As close to the cooling tower as possible to minimize the amount of pipe to the discharge device
(3) Where they will be accessible during a fire emergency

[**214:**5.2.6.1.2]

22.21.2.6.2 Manual Release Valve. [**214:**5.2.6.2]

22.21.2.6.2.1 Remote manual release valves, where required, shall be conspicuously located and accessible during a fire emergency. [**214:**5.2.6.2.1]

22.21.2.6.2.2 Where remote manual release valves are not required, an inspector's test valve shall be provided for each pilot-head-operated system. [**214:**5.2.6.2.2]

22.21.2.7 Strainers. Strainers shall be required for systems utilizing discharge devices with waterways of less than ⅜ in. (9.5 mm) diameter. [**214:**5.2.7]

22.21.2.8 Heat Detectors. Where deluge or preaction systems are used, heat detectors shall be installed and shall be selected from either of the types in 5.2.8.1 or 5.2.8.2 of NFPA 214. [**214:**5.2.8]

22.21.2.8.1 In mechanical-draft towers, pilot line detectors shall be located under the fan deck at the circumference of the fan opening and under the fan opening where necessary to comply with the spacing requirements in 22.21.2.8.1.1. *(For extended fan decks, see 5.2.8.2.3 in NFPA 214.)* [**214:**5.2.8.1.2.1(A)]

22.21.2.8.1.1 Pilot line detectors shall be spaced not more than 8 ft (2.4 m) apart in any direction including the fan opening. Temperature ratings shall be selected in accordance with operating conditions, but shall be no less than intermediate. [**214:**5.2.8.1.2.1(B)]

22.21.2.8.2 On towers having extended fan decks that completely enclose the distribution basin, electrical heat detectors shall be located under the fan deck extension in accordance with standard, indoor-spacing rules for the type detectors used in accordance with *NFPA 72*. [**214:**5.2.8.2.3]

22.21.2.8.2.1 Where the fan deck extension is 16 ft (4.9 m) or less and this dimension is the length of the joist channel, then only one row of detectors centered on and at right angles to the joist channels shall be required. Spacing between detectors shall be in accordance with *NFPA 72*. [**214:**5.2.8.2.3.1]

22.21.2.8.2.2 On towers having extended fan decks that do not completely enclose the hot-water basin, electrical heat detectors shall not be required under the fan deck extension. [**214:**5.2.8.2.3.2]

22.21.2.8.3 Where electrical heat detectors are inaccessible during tower operation, an accessible test detector shall be provided for each detection zone. [**214:**5.2.8.3]

22.21.2.8.4 Electrical heat detector components exposed to corrosive vapors or liquids shall be protected by materials of construction or by protective coatings applied by the equipment manufacturer. [**214:**5.2.8.4]

22.21.2.9 Protection for Fan Drive Motor. [**214:**5.2.9]

22.21.2.9.1 A sprinkler or spray nozzle shall be provided over each fan drive motor where the motor is located so that it is not within the protected area of the tower. [**214:**5.2.9.1]

22.21.2.9.2 Where a preaction or deluge system is used, the detection system shall be extended to cover the motor. [**214:**5.2.9.2]

22.21.2.9.3 Provision shall be made to interlock the fan motors with the fire protection system so that the cooling tower fan motors are stopped in the cell(s) for which the system is actuated. [**214:**5.2.9.3]

22.21.2.9.4 Where the continued operation of the fans is vital to the process, a manual override switch shall be permitted to be provided to reactivate the fan when it is determined that there is no fire. [**214:**5.2.9.4]

22.21.2.10 Corrosion Protection. [**214:**5.3]

22.21.2.10.1 Piping, fittings, hangers, braces, and attachment hardware including fasteners shall be hot-dipped galvanized steel in accordance with ASTM A 153A/153M, *Standard Specification for Zinc Coating (Hot Dip) on Iron and Steel Hardware,* or other materials having a superior corrosion resistance. [**214:**5.3.1]

22.21.2.10.1.1 Exposed pipe threads and bolts on fittings shall be protected against corrosion. [**214:**5.3.1.1]

22.21.2.10.1.2 All other components shall be corrosion resistant or protected against corrosion by a coating. [**214:**5.3.1.2]

22.21.2.10.2* Wax-type coatings shall not be used on devices without fusible elements. [**214:**5.3.2]

22.21.2.10.3* Special care shall be taken in the handling and installation of wax-coated or similar sprinklers to avoid damaging the coating. [**214:**5.3.3]

22.21.2.10.3.1 Corrosion-resistant coatings shall not be applied to the sprinklers by anyone other than the manufacturer of the sprinklers. [**214:**5.3.3.1]

22.21.2.10.3.2 In all cases, any damage to the protective coating occurring at the time of installation shall be repaired at once using only the coating of the manufacturer of the sprinkler in an approved manner, so that no part of the sprinkler will be exposed after the installation has been completed. [**214:**5.3.3.2]

22.22 Standard for the Construction and Fire Protection of Marine Terminals, Piers, and Wharves.

22.22.1 Design Requirements.

22.22.1.1* Unless the requirements of 22.22.1.2 apply, automatic sprinkler systems shall be designed based upon the design criteria for the protection of Group A plastics. [**307:**5.4.2.1]

22.22.1.2 With the approval of the authority having jurisdiction, the requirements of 22.22.1.1 shall not apply to buildings used exclusively for the handling or storage of specific cargoes and commodities that are defined as commodity classes less than Group A plastics by this standard. [**307:**5.4.2.2]

22.22.1.3 Buildings consistent with 22.22.1.2 shall be protected in accordance with the design criteria for the applicable commodity as required by this standard. [**307:**5.4.2.3]

Copyright 2014 National Fire Protection Association (NFPA). Licensed, by agreement, for individual use and download on October 4, 2014 to LEADER and READER for designated user PATTARAPORN SRITRAKOOL. No other reproduction or transmission in any form permitted without written permission of NFPA. For inquires or to report unauthorized use, contact licensing@nfpa.org.

22.22.1.4 Buildings used for the storage of hazardous materials shall be protected in accordance with this standard and the applicable codes and standards for the type of hazardous material being stored. [**307:**5.4.2.4]

22.22.2 Installation Requirements.

22.22.2.1 Piers and Wharves with Combustible Substructure.

22.22.2.1.1 Where there is danger of damage to sprinkler equipment by floating objects, physical barriers shall be provided to exclude such objects. [**307:**4.3.3.1.2.2]

22.22.2.1.2 The installation requirements in 22.22.2.1.2.1, 22.22.2.1.2.1(A), and 22.22.2.1.2.1(B) are also required.

22.22.2.1.2.1* Upward Projecting Sprinklers. Where narrow horizontal channels or spaces are caused by caps, stringers, ties, and other structural members and where the standard upright sprinkler does not project sufficient water upward to extinguish or control fires on the underside of the pier or wharf deck, a sprinkler that projects water upward to wet the overhead shall be used. [**307:**4.3.3.1.3.1]

(A) Location, spacing, and deflector position shall be governed by the discharge pattern of the sprinkler and the structure being protected. [**307:**4.3.3.1.3.1(A)]

(B) The following design and installation guides shall apply where pendent sprinklers in the upright position or old-style sprinklers are to be utilized:

(1) The maximum coverage per sprinkler head shall be limited to 80 ft^2 (7.5 m^2).
(2) Where spacing or arrangement of stringers constitutes typical open-joist construction directly supporting the deck, sprinkler branch lines shall be installed between the bents at right angles to the stringers and shall meet the following requirements:
    (a) Spacing between branch lines shall not exceed 10 ft (3 m).
    (b) Sprinklers on branch lines shall be staggered and spaced not to exceed 8 ft (2.5 m) on center.
(3)*Where crisscross construction is involved, closer spacing of sprinklers shall be permitted as necessary to provide wetting of the entire structure.
(4) The deflectors of sprinklers on lines under stringers shall be located not less than 4 in. (100 mm) nor more than 10 in. (250 mm) below the bottom plane of the stringer, and not more than 18 in. (450 mm) below the underside of the pier or wharf deck.
(5)*The sprinkler system shall be hydraulically designed in accordance with the requirements of this standard and shall meet the following requirements:
    (a) Sprinkler orifice shall be ½ in. (12.7 mm) and shall discharge at a minimum pressure of 12.5 psi (85 kPa).
    (b) Design area shall be based upon the largest area between firestops plus an additional area embracing at least two branch lines on opposite sides of the firestop.
    (c) Minimum design area shall be not less than 5000 ft^2 (465 m^2).
(6) The temperature rating of the sprinkler shall not exceed 165°F (74°C).
(7) The maximum area to be protected by any one system shall be limited to 25,000 ft^2 (2325 m^2).

[**307:**4.3.3.1.3.1(B)]

22.23 Semiconductor Fabrication Facilities.

22.23.1 Design Requirements.

22.23.1.1* Automatic sprinklers for cleanrooms or clean zones shall be installed in accordance with NFPA 13 and shall be hydraulically designed for a density of 0.20 gpm/ft^2 (8.15 L/min·m^2) over a design area of 3000 ft^2 (278.8 m^2). [**318:**4.1.2.1]

22.23.1.2 Automatic sprinkler protection shall be designed and installed in the plenum and interstitial space above cleanrooms in accordance with NFPA 13, for a density of 0.20 gpm/ft^2 (8.15 L/min·m^2) over a design area of 3000 ft^2 (278.8 m^2). [**318:**4.1.2.5]

22.23.1.2.1* Automatic sprinklers shall be permitted to be omitted if the construction and occupancy of these spaces are noncombustible. [**318:**4.1.2.5.1]

22.23.1.3* Sprinklers installed in duct systems shall be hydraulically designed to provide 0.5 gpm (1.9 L/min) over an area derived by multiplying the distance between the sprinklers in a horizontal duct by the width of the duct. [**318:**4.1.2.6.2]

22.23.1.3.1* Minimum discharge shall be 20 gpm (76 L/min) per sprinkler from the five hydraulically most remote sprinklers. [**318:**4.1.2.6.2.1]

22.23.2 Installation Requirements.

22.23.2.1* Wet pipe automatic sprinkler protection shall be provided throughout facilities containing cleanrooms and clean zones. [**318:**4.1.1]

22.23.2.2* Approved quick-response sprinklers shall be utilized for sprinkler installations within down-flow airstreams in cleanrooms and clean zones. [**318:**4.1.2.2]

22.23.2.3* Sprinklers shall be spaced a maximum of 20 ft (6.1 m) apart horizontally and 12 ft (3.7 m) apart vertically. [**318:**4.1.2.6.2.2]

22.23.2.4 A separate indicating control valve shall be provided for sprinklers installed in ductwork. [**318:**4.1.2.6.3]

22.23.2.5 The sprinklers shall be accessible for periodic inspection and maintenance. [**318:**4.1.2.6.6]

22.24 Aircraft Hangars.

22.24.1 Design Requirements. Sprinkler systems installed in aircraft hangars shall comply with NFPA 409.

22.24.2 Installation Requirements. Sprinkler systems installed in aircraft hangars shall comply with NFPA 409.

22.25 Airport Terminal Buildings, Fueling Ramp Drainage, and Loading Walkways.

22.25.1 Design Requirements.

22.25.1.1 Passenger-handling areas shall be classified as Ordinary Hazard Group 1 Occupancy for the purpose of sprinkler system design. [**415:**4.5.1.3]

22.25.1.2* Baggage, package, and mail-handling areas shall be classified as Ordinary Hazard Group 2 Occupancy for the purpose of sprinkler system design. [**415:**4.5.1.4]

22.25.1.3* Other areas of the airport terminal building shall be classified based on the occupancy of the area. [**415:**4.5.1.5]

22.25.2 Installation Requirements. (Reserved)

Copyright 2014 National Fire Protection Association (NFPA). Licensed, by agreement, for individual use and download on October 4, 2014 to LEADER and READER for designated user PATTARAPORN SRITRAKOOL. No other reproduction or transmission in any form permitted without written permission of NFPA. For inquires or to report unauthorized use, contact licensing@nfpa.org.

22.26 Aircraft Engine Test Facilities.

22.26.1 Design Requirements.

22.26.1.1* In engine test cells, the minimum design discharge density shall be 0.50 gpm/ft^2 (0.34 L/sec/m^2) of protected area. [**423:**7.6.3]

22.26.1.2 In engine test cells, water supplies shall be capable of meeting the largest demand at the design rate plus hose stream demand for a period of 30 minutes. [**423:**7.6.4]

22.26.1.2.1 Hose stream demand shall be a minimum of 250 gpm (16 L/sec). [**423:**7.6.4.1]

22.26.1.2.2 The hydraulic calculation and the water supply shall be based on the assumption that all sprinklers in the test cell are operating simultaneously. [**423:**7.6.4.2]

22.26.2 Installation Requirements. (Reserved)

22.27 Advanced Light Water Reactor Electric Generating Plants.

22.27.1 Design Requirements.

22.27.1.1* Sprinkler System Water Supply. The fire water supply shall be calculated on the basis of the largest expected flow rate for a period of 2 hours but shall not be less than 300,000 gal (1,135,500 L), and the following criteria also shall apply:

(1) The flow rate shall be based on 500 gpm (1892.5 L/min) for manual hose streams plus the largest design demand of any sprinkler or fixed water spray system as determined in accordance with this standard, with NFPA 15, or with NFPA 804.
(2) The fire water supply shall be capable of delivering the design demand specified in 22.27.1.1(1) with the hydraulically least demanding portion of fire main loop out of service.

[**804:**9.2.1]

22.27.1.2 Yard Mains. The underground yard fire main loop shall be installed to furnish anticipated water requirements, and the following criteria also shall be met:

(1) The type of pipe and water treatment shall be design considerations, with tuberculation as one of the parameters.
(2) Means for inspecting and flushing the systems shall be provided.

[**804:**9.4.1]

22.27.1.3 Cable Tunnels. [**804:**10.4.2]

22.27.1.3.1 Automatic sprinkler systems shall be designed for a density of 0.30 gpm/ft^2 (12.2 L/min·m^2) for the most remote 100 linear ft (30.5 m) of cable tunnel up to the most remote 2500 ft^2 (232.2 m^2). [**804:**10.4.2.2.2]

22.27.1.3.2 Deluge sprinkler systems or deluge spray systems shall meet the following criteria:

(1) They shall be zoned to limit the area of protection to that which the drainage system can handle with any two adjacent systems actuated.
(2) They shall be hydraulically designed with each zone calculated with the largest adjacent zone flowing.

[**804:**10.4.2.2.4]

22.27.1.4 Cable Spreading Room. The cable spreading room shall have an automatic fixed water-based suppression system, and the following criteria also shall be met:

(1) The location of sprinklers or spray nozzles shall protect cable tray arrangements to ensure water coverage for areas that could present exposure fire hazards to the cable raceways.
(2) Automatic sprinkler systems shall be designed for a density of 0.30 gpm/ft^2 (12.2 L/min·m^2) over the most remote 2500 ft^2 (232.2 m^2).

[**804:**10.4.1.1]

22.27.1.5* Beneath Turbine Generator Operating Floor. All areas beneath the turbine generator operating floor shall be protected by an automatic sprinkler or foam-water sprinkler system meeting the following criteria:

(1) The sprinkler system beneath the turbine generator shall be designed around obstructions from structural members and piping.
(2) The sprinkler system shall be designed to a minimum density of 0.30 gpm/ft^2 (12.2 L/min·m^2) over a minimum application of 5000 ft^2 (464.5 m^2).

[**804:**10.8.2.1]

22.27.1.6* Turbine Generator Bearings. [**804:**10.8.3]

22.27.1.6.1 Lubricating oil lines above the turbine operating floor shall be protected with an automatic sprinkler system to a minimum density of 0.30 gpm/ft^2 (12.2 L/min·m^2) that covers those areas subject to oil accumulation, including the area within the turbine lagging (skirt). [**804:**10.8.4]

22.27.1.6.2 Where shaft-driven ventilation systems are used, an automatic preaction sprinkler system providing a density of 0.30 gpm/ft^2 (12.2 L/min·m^2) over the entire area shall be provided. [**804:**10.8.7(2)]

22.27.1.7 Standby Emergency Diesel Generators and Combustion Turbines. The sprinkler and water spray protection systems shall be designed for a 0.25 gpm/ft^2 (10.19 L/min·m^2) density over the entire area. [**804:**10.9.3(2)]

22.27.1.8 Fire Pump Room/House. If sprinkler and water spray systems are provided for fire pump houses, they shall be designed for a minimum density of 0.25 gpm/ft^2 (10.19 L/min·m^2) over the entire fire area. [**804:**10.22.2]

22.27.1.9 Auxiliary Boilers. Sprinkler and water spray systems shall be designed for a minimum density of 0.25 gpm/ft^2 (10.19 L/min·m^2) over the entire area. [**804:**10.24.3]

22.27.2 Installation Requirements.

22.27.2.1 Yard Mains, Hydrants, and Building Standpipes. [**804:**9.4]

22.27.2.1.1 Approved visually indicating sectional control valves such as postindicator valves shall be provided to isolate portions of the main for maintenance or repair without simultaneously shutting off the supply to both primary and backup fire suppression systems. [**804:**9.4.2]

22.27.2.1.2* Sectional control valves shall allow maintaining independence of the individual loop around each unit, and the following also shall apply:

(1) For such installations, common water supplies shall also be permitted to be utilized.
(2) For multiple-reactor sites with widely separated plants [approaching 1 mi (1.6 km) or more], separate yard fire main loops shall be used.

[**804:**9.4.4]

Copyright 2014 National Fire Protection Association (NFPA). Licensed, by agreement, for individual use and download on October 4, 2014 to LEADER and READER for designated user PATTARAPORN SRITRAKOOL. No other reproduction or transmission in any form permitted without written permission of NFPA. For inquires or to report unauthorized use, contact licensing@nfpa.org.

22.27.2.1.3 Sprinkler systems and manual hose station standpipes shall have connections to the plant underground water main so that a single active failure or a crack in a moderate-energy line can be isolated so as not to impair both the primary and the backup fire suppression systems unless otherwise permitted by the following:

(1) Alternatively, headers fed from each end shall be permitted inside buildings to supply both sprinkler and standpipe systems, provided steel piping and fittings meeting the requirements of ASME B31.1, *Code for Power Piping*, are used for the headers (up to and including the first valve) supplying the sprinkler systems where such headers are part of the seismically analyzed hose standpipe system.
(2) Where provided, such headers shall be considered an extension of the yard main system.
(3) Each sprinkler and standpipe system shall be equipped with an outside screw and yoke (OS&Y) gate valve or other approved shutoff valve.

[**804:**9.4.7]

22.27.2.2 Cable Concentrations. The location of sprinklers or spray nozzles shall protect cable tray arrangements and possible transient combustibles to ensure water coverage for areas that could present exposure fire hazards to the cable raceways. [**804:**10.4.2.2.3]

22.27.2.3 Turbine Building. Deluge sprinkler systems or deluge spray systems shall meet the following criteria:

(1) They shall be zoned to limit the area of protection to that which the drainage system can handle with any two adjacent systems actuated.
(2) They shall be hydraulically designed with each zone calculated with the largest adjacent zone flowing.

[**804:**10.4.2.2.4]

22.28 Light Water Nuclear Power Plants.

22.28.1 Design Requirements. A fire protection water supply of reliability, quantity, and duration shall be provided by one of the two following methods:

(1) A fire protection water supply of not less than two separate 300,000 gal (1,135,500 L) supplies shall be provided.
(2) The 2-hour fire flow rate for 2 hours shall be calculated, and the following criteria shall be met:
    (a) The flow rate shall be based on 500 gpm (1892.5 L/min) for manual hose streams plus the largest design demand of any sprinkler or fixed water spray system(s) in the power block as determined in accordance with NFPA 13 or NFPA 15.
    (b) The fire water supply shall be capable of delivering this design demand with the hydraulically least demanding portion of fire main loop out of service.

[**805:**5.5.1]

22.28.2 Installation Requirements.

22.28.2.1 Each sprinkler and standpipe system shall be equipped with an outside screw and yoke (OS&Y) gate valve or other approved shutoff valve. [**805:**5.5.17]

22.28.2.2 Sprinkler systems and manual hose station standpipes shall be connected to the plant fire protection water main so that a single active failure or a crack to the water supply piping to these systems can be isolated so as not to impair both the primary and backup fire suppression systems. [**805:**5.5.12]

22.29 Hydroelectric Generating Plants. [NFPA 851]

22.29.1 Design Requirements.

22.29.1.1 Hydraulic Control Systems. Fixed fire protection for this equipment, where provided, should be as follows:

(1) Automatic wet pipe sprinkler systems utilizing a design density of 0.25 gpm/ft^2 (10.2 mm/min) for the entire hazard area.
(2) Automatic foam-water sprinkler systems providing a density of 0.16 gpm/ft^2 (6.5 mm/min).

[**851:**7.2.4]

22.29.1.2 Cable Concentrations. Sprinkler or water spray systems should be designed for a density of 0.30 gpm/ft^2 (12.2 mm/min) over 2500 ft^2 (232 m^2). This coverage is for area protection. Individual cable tray tier coverage could be required based on the fire risk evaluation. [**851:**7.5.3]

22.29.1.3 Cable Tunnels. Where protection is required by the fire risk evaluation, cable tunnels should be protected by automatic water spray, automatic wet pipe sprinkler, or foam-water spray systems. Automatic sprinkler systems should be designed for a density of 0.30 gpm/ft^2 (12.2 mm/min) over 2500 ft^2 (232 m^2) or the most remote 100 linear ft (30.5 m) of cable tunnel up to 2500 ft^2 (232 m^2). [**851:**7.6.1]

22.29.1.4 Emergency Generators. Emergency generators located within main plant structures should be protected by automatic sprinkler, water spray, foam-water sprinkler, compressed air foam, or gaseous-type extinguishing systems. Sprinkler and water spray protection systems should be designed for a 0.25 gpm/ft^2 (10.2 mm/ min) density over the fire area. [**851:**7.11.2]

22.29.1.5 Air Compressors. Automatic sprinkler protection designed for a density of 0.25 gpm/ft^2 (10.2 mm/min) over the postulated oil spill or compressed air foam should be considered for air compressors containing a large quantity of oil. [**851:**7.12]

22.29.1.6 Hydraulic Systems for Gate and Valve Operators. Hydraulic control systems should use a listed fire-resistant fluid. Automatic sprinkler protection designed for a density of 0.25 gpm/ ft^2 (10.2 mm/min) over the fire area or compressed air foam systems should be considered for hydraulic systems not using a listed fire-resistant fluid. [**851:**7.13]

22.29.1.7 Fire Pumps. Rooms housing diesel-driven fire pumps should be protected by automatic sprinkler, water spray, foamwater sprinkler, or compressed air foam systems. If sprinkler and water spray protection systems are provided, they should be designed for a density of 0.25 gpm/ft^2 (10.2 mm/min) over the fire area. For automatic foam-water sprinkler systems, a density of 0.16 gpm/ft^2 (6.5 mm/min) should be provided. [**851:**7.14]

22.29.2 Installation Requirements.

22.29.2.1 Hydraulic Control Systems. Fire extinguishing systems, where installed for lube oil systems employing combustible-type oil, should include protection for the reservoirs, pumps, and all oil lines, especially where unions exist on piping and beneath any shielded area where flowing oil can collect. Facilities not provided with curbs or drains should extend coverage for a distance of 20 ft (6 m) from the oil lines, when measured from the outermost oil line. [**851:**7.2.7]

Copyright 2014 National Fire Protection Association (NFPA). Licensed, by agreement, for individual use and download on October 4, 2014 to LEADER and READER for designated user PATTARAPORN SRITRAKOOL. No other reproduction or transmission in any form permitted without written permission of NFPA. For inquires or to report unauthorized use, contact licensing@nfpa.org.

22.30 Code for the Protection of Cultural Resource Properties — Museums, Libraries, and Places of Worship. [NFPA 909]

22.30.1 Design Requirements.

22.30.1.1* Standard-response sprinklers shall be permitted for use in light-hazard areas. [**909:**12.4.4.2]

22.30.1.2* Preaction and dry pipe systems shall be designed to minimize the risk of corrosion in accordance with the requirements of 9.12.12.3.1 through 9.12.12.3.5 of NFPA 909. [**909:**9.12.12.3]

22.30.1.3 System Design for Museums, Libraries, and Their Collections in Compact Storage.

22.30.1.3.1* The design shall recognize the nature of the potential threat of a fire that originates in a compact mobile storage unit, where fuel loads are invariably large and fire growth is significantly different from that in other kinds of storage. [**909:**9.12.23.4.1.3]

22.30.1.3.2* The automatic fire suppression system, the compact storage system, and the storage compartmentalization features shall be designed to limit fire damage in accordance with the facility's fire safety objectives. [**909:**9.12.23.4.1.4(A)]

22.30.1.3.3 Design calculations shall include the number and size of the storage modules, the separation provided between the modules end-to-end and back-to-back, and the type of material being stored. [**909:**9.12.23.4.1.4(B)]

22.30.1.3.4 Where the automatic fire suppression is provided by automatic fire sprinkler systems, the systems shall be wet pipe, single interlock pre-action, or single non-interlock pre-action systems. [**909:**9.12.23.4.1.4(C)]

22.30.1.3.5 Dry pipe or double-interlock pre-action systems shall not be installed in compact storage areas. [**909:**9.12.23.4.1.4(D)]

22.30.1.3.6 Where compact storage is installed in an existing storage area, the existing automatic fire detection and fire suppression systems shall be modified as required to accommodate the increased fire loading. [**909:**9.12.23.4.1.4(E)]

22.30.2 Installation Requirements.

22.30.2.1* Branch lines shall be pitched at least ½ in. per 10 ft (4 mm/m), and mains shall be pitched at least ¼ in. per 10 ft (2 mm/m). [**909:**9.12.12.3.1]

22.30.2.2* Auxiliary drains shall be provided at all low points in accordance with NFPA 13 requirements for dry pipe systems and preaction systems subject to freezing. [**909:**9.12.12.3.2.1]

22.30.2.3* Where steel pipe is used in dry pipe and preaction systems, the provisions of NFPA 13 shall be applied assuming water supplies and environmental conditions that contribute to unusual corrosive properties, and a plan shall be developed to treat the system using one of the following methods:

(1) Install a water pipe that is corrosion resistant
(2) Treat all water that enters the system using an approved corrosion inhibitor
(3) Implement an approved plan for monitoring the interior conditions of the pipe at established intervals and locations.

[**909:**9.12.12.3.3]

22.31 National Electrical Code.

22.31.1 Design Requirements. (Reserved)

22.31.2 Installation Requirements.

22.31.2.1 Dedicated Electrical Space. The space equal to the width and depth of the equipment and extending from the floor to a height of 6 ft (1.8 m) above the equipment or to the structural ceiling, whichever is lower, shall be dedicated to the electrical installation. No piping, ducts, leak protection apparatus, or other equipment foreign to the electrical installation shall be located in this zone.

Exception: Suspended ceilings with removable panels shall be permitted within the 1.8-m (6-ft) zone.
*[**70:** 110.26(E)(1)(a)]*

22.31.2.2 The area above the dedicated space required by 22.31.2.1 shall be permitted to contain foreign systems, provided protection is installed to avoid damage to the electrical equipment from condensation, leaks, or breaks in such foreign systems. [**70:**110.26(E)(1)(b)]

22.31.2.3* Sprinkler protection shall be permitted for the dedicated space where the piping complies with this section. [**70:**110.26(E)(1)(c)]

22.32 Fire Protection of Telecommunication Facilities.

22.32.1 Design Requirements. (Reserved)

22.32.2 Installation Requirements.

22.32.2.1 All piping for dry pipe and pre-action sprinkler systems shall be installed with a pitch in accordance with NFPA 13 whether or not the piping is subjected to freezing conditions. [**76:**8.6.2.2.2]

22.33 Exhaust Systems for Air Conveying of Vapors, Gases, Mists, and Noncombustible Particulate Solids.

22.33.1 Design Requirements.

22.33.1.1 When a sprinkler system is installed, means shall be provided to prevent water accumulation in the duct or flow of water back to a process subject that could be damaged by water. [**91:**9.2]

22.33.2 Installation Requirements. (Reserved)

22.34 Hypobaric Facilities.

22.34.1 Design Requirements.

22.34.1.1 A fire suppression system consisting of independently supplied and operating handline and fixed deluge-type water spray systems shall be installed. [**99B:**4.5.1.5]

22.34.1.2 Design of the fire suppression system shall be such that failure of components in either the handline or deluge system will not render the other system inoperative. [**99B:**4.5.1.6]

22.34.1.3 System design shall be such that activation of either the handline or the deluge system shall automatically cause the following:

(1) Visual and audio alarm indicators shall be activated at the chamber operator's console.

Copyright 2014 National Fire Protection Association (NFPA). Licensed, by agreement, for individual use and download on October 4, 2014 to LEADER and READER for designated user PATTARAPORN SRITRAKOOL. No other reproduction or transmission in any form permitted without written permission of NFPA. For inquires or to report unauthorized use, contact licensing@nfpa.org.

(2) All ungrounded electrical leads for power and lighting circuits contained inside the chamber shall be disconnected.
(3) Emergency lighting and communication, where used, shall be activated.

[**99B:**4.5.1.7]

22.34.1.4 Intrinsically safe circuits, including sound-powered communications, shall be permitted to remain connected when either the handline or deluge system is activated. [**99B:**4.5.1.8]

22.34.1.5 Control circuitry and other electrical equipment involved in the fire detection and suppression system shall be powered from the critical branch of the emergency electrical system and connected to the uninterruptible power supply (UPS). [**99B:**4.5.1.11]

22.34.1.6 In chambers that consist of more than one compartment, the deluge system shall operate independently or simultaneously even if the compartments are at different pressures (altitudes). [**99B:**4.5.2.2]

22.34.1.7 Fixed deluge systems shall not be required in chamber compartments that are used strictly as personnel transfer compartments and for no other purpose. [**99B:**4.5.2.3]

22.34.1.8 Manual activation and deactivation deluge controls shall be located at the operator's console and in each chamber compartment containing a deluge system. [**99B:**4.5.2.4]

22.34.1.9 Controls shall be designed to prevent unintended activation. [**99B:**4.5.2.4.1]

22.34.1.10 Water shall be delivered from the fixed discharge nozzles of the deluge system within 3 seconds of activation of any affiliated deluge control. [**99B:**4.5.2.5]

22.34.1.11* Total water demand shall be determined by multiplying the total chamber floor area by 7.5 gpm/ft^2 (305.6 L/min/m^2). [**99B:**4.5.2.5.1]

22.34.1.12 The minimum operating pressure at the nozzle shall be 30 psi (206 kPa). [**99B:**4.5.2.5.2]

22.34.1.13 The water supply shall be constantly and fully charged. [**99B:**4.5.2.6]

22.34.1.14 The water supply pressure shall be constantly monitored and an interlock shall prevent chamber operation if water supply pressure has fallen 10 percent below normal operating charge pressure. [**99B:**4.5.2.7]

22.34.1.15 There shall be water in the deluge system to maintain the flow specified in 22.34.1.11 simultaneously in each chamber containing the deluge system for 1 minute. [**99B:**4.5.2.8]

22.34.1.16 The limit on maximum extinguishment duration shall be governed by the chamber capacity (bilge capacity also, if so equipped) and/or its drainage system. [**99B:**4.5.2.9]

22.34.1.17 The deluge system shall have stored pressure to operate for at least 15 seconds without electrical branch power. [**99B:**4.5.2.10]

22.34.2 Installation Requirements. (Reserved)

22.35 Coal Mines.

22.35.1 Design Requirements.

22.35.1.1 Underground Mining Operations.

22.35.1.1.1* Fire sprinkler systems for underground mining operations shall be designed and installed in accordance with NFPA 120.

22.35.1.2 Coal Preparation Plants and Crusher Buildings.

22.35.1.2.1 When automatic sprinkler systems are to be supplied through the standpipe system, hydraulic calculations shall be used to ensure that the piping and the water supply meet the hose and automatic sprinkler demands simultaneously. [**120:**6.3.2.3.2]

22.35.1.3 Underground Conveyors.

22.35.1.3.1 The application rate shall not be less than 10.2 L/min/m^2 (0.25 gpm/ft^2) of the top surface of the top belt. [**120:**9.4.6.4]

22.35.1.3.2 The water supply shall be free of excessive sediment and corrosives and provide the required flow for not less than 10 minutes. A strainer with a flush-out connection and manual shutoff valve shall be provided. [**120:**9.4.6.6]

22.35.1.3.3 The system shall be interlocked to shut down the conveyor and provide an audible and a visual alarm. [**120:**9.4.6.8]

22.35.1.3.4 Fire suppression systems shall also comply with 22.35.1.1.1. [**120:**9.4.6.10]

22.35.1.3.5 Sprinkler systems shall meet the following requirements:

(1) The sprinklers shall be installed in accordance with NFPA 13 as far as practical, and shall have components that have been listed.
(2) The water supply shall be capable of supplying a constant flow of water with all heads functioning for a period of 10 minutes.
(3) The sprinkler head activation temperature shall not be less than 65.6°C (150°F) or greater than 148.9°C (300°F).

[**120:**9.4.6.13]

22.35.2 Installation Requirements.

22.35.2.1 Underground Conveyors.

22.35.2.1.1 Deluge water spray systems, foam systems, closed-head sprinkler systems, or dry-chemical systems automatically actuated by rise in temperature shall be installed at main and secondary belt conveyor drives. [**120:**9.4.6.1]

22.35.2.1.2 Fire suppression systems shall extend to the drive areas of belt conveyors, including drive motor(s), reducer, head pulley, and belt storage unit (takeup), including any hydraulic power unit; its electrical controls; and the top and bottom of the first 15.2 m (50 ft) of belt from the drive on the downwind side. [**120:**9.4.6.2]

22.35.2.1.3 Piping for the deluge, foam, or closed-head sprinkler system shall be metal and listed for sprinkler applications. [**120:**9.4.6.3]

22.35.2.1.4 The discharge shall be directed at both the upper and the bottom surface of the top belt and the upper surface of the bottom belt. [**120:**9.4.6.5]

22.35.2.1.5 Maximum distance between nozzles on a branch line shall not exceed 2.4 m (8 ft). [**120:**9.4.6.7]

22.35.2.1.6 The components of the system shall be located so as to minimize the possibility of damage by roof fall or by the moving belt and its load. [**120:**9.4.6.9]

22.35.2.1.7 Deluge water spray systems shall meet the requirements of 22.35.2.1.7.1 through 22.35.2.1.7.5. [**120:**9.4.6.11]

Copyright 2014 National Fire Protection Association (NFPA). Licensed, by agreement, for individual use and download on October 4, 2014 to LEADER and READER for designated user PATTARAPORN SRITRAKOOL. No other reproduction or transmission in any form permitted without written permission of NFPA. For inquires or to report unauthorized use, contact licensing@nfpa.org.

22.35.2.1.7.1 The system shall be activated by heat detectors. [**120:**9.4.6.11.1]

22.35.2.1.7.2 Heat detectors shall be located at the belt drive, hydraulic takeup unit (unless fire-resistive fluid is used), discharge roller, and the roof above the conveyor. [**120:**9.4.6.11.1.1]

22.35.2.1.7.3 Heat detectors at the roof line should be spaced 2.4 m to 3.0 m (8 ft to 10 ft) apart along the entire length of the protected area of the belt. [**120:**9.4.6.11.1.2]

22.35.2.1.7.4 The nozzles shall be full cone, corrosion resistant, and provided with blow-off dust covers. [**120:**9.4.6.11.2]

22.35.2.1.7.5 A closed sprinkler head shall be used over the electrical controls. [**120:**9.4.6.11.3]

22.35.2.2 Mine Surface Buildings.

22.35.2.2.1 If sprinklers are installed, waterflow, valve tamper, and low building temperature alarms shall be provided. [**120:**8.6.1.2]

22.36 Metal/Nonmetal Mining and Metal Mineral Processing Facilities.

22.36.1 Design Requirements.

22.36.1.1 Water Supplies.

22.36.1.1.1 When automatic sprinkler systems are supplied through the hand hose line standpipe system, hydraulic calculations shall be used to ensure that the piping and water supply will supply the hose and automatic sprinkler demands simultaneously. [**122:**6.2.3]

22.36.1.1.2 Where a fire water supply [for a surface mineral processing plant] is required by the risk assessment, capacity and availability shall provide the water demand for fire-fighting purposes, including hose and sprinkler systems, for a minimum duration of 2 hours. [**122:**13.7.2]

22.36.1.2* Where provided, automatic sprinkler systems installed for the protection of flammable liquid or diesel fuel storage areas shall be of the foam-water type. [**122:**11.3.1]

22.36.1.3 New Solvent Extraction (SX) Facilities.

22.36.1.3.1 Fixed fire suppression shall be provided for the following SX facility areas and equipment:

(1) Buildings housing SX processes
(2) Interior of all mixer-settler vessels/cells
(3) Crud tanks that include treatment filters and centrifuges
(4) Coalescers
(5) Along launders and weirs outside of mixer-settler vessels
(6) Inside pipe trenches carrying solvents
(7) Inside organic solvent and diluent tanks
(8) Inside dikes enclosing organic solvent storage tanks
(9) Over organic solvent pumps
(10) Over elevated pipe racks carrying organic solvents in plastic pipes
(11) Other areas handling, processing, or exposed to flammable or combustible liquids

[**122:**13.19.1]

22.36.1.3.2* Fire suppression for applications in 22.36.1.3.1 shall be water, foam, dry chemical, or water mist. [**122:**13.19.1.1]

22.36.1.3.3* Design of fire suppression systems in 22.36.1.3.1 shall be based on criteria set forth in NFPA 11; NFPA 15; NFPA 16; and NFPA 17. [**122:**13.19.1.2]

22.36.1.3.4* Actuation of fire suppression systems in 22.36.1.3.1 shall be automatic. [**122:**13.19.1.3]

22.36.1.3.5 As exposure protection, automatic water-only deluge (open-head) sprinkler systems shall be provided between mixer-settler trains if spaced closer than 15.24 m (50 ft) from each other. [**122:**13.19.2]

22.36.1.3.6 As exposure protection, automatic water-only deluge sprinkler systems shall be provided around the exterior perimeter of organic solvent tanks if spaced closer than 15.24 m (50 ft) from each other. [**122:**13.19.3]

22.36.1.3.7 As exposure protection, automatic fire suppression shall be provided over other critical equipment (i.e., transformers) or outside along important building walls [i.e., motor control center (MCC) rooms] that are within 15.24 m (50 ft) of a solvent fire area. [**122:**13.19.4]

22.36.1.3.8 Hydraulic design of automatic fire suppression systems in 22.36.1.3.1 shall include the simultaneous operation of all fire protection systems associated with a single (multi-cell) train. [**122:**13.19.5]

22.36.1.3.9 The total flow rate of foam application and water associated with the discharge of automatic fire extinguishing systems, fixed monitors, and hydrants shall determine the total volume of fire water required. [**122:**13.19.6]

22.36.2 Installation Requirements. (Reserved)

22.37 Hazardous Materials Code.

22.37.1 Design Requirements. Sprinkler system discharge criteria for the protection of hazardous materials shall comply with NFPA 400.

22.37.1.1 Requirements for Occupancies Storing Quantities of Hazardous Materials Exceeding the Maximum Allowable Quantities per Control Area for High Hazard Contents. The design of the sprinkler system shall be not less than ordinary hazard Group 2 in accordance with NFPA 13, except as follows:

(1) Where different requirements are specified in Chapters 11 through 21 of NFPA 400
(2) Where the materials or storage arrangement requires a higher level of sprinkler system protection in accordance with nationally recognized standards
(3) Where approved alternative automatic fire extinguishing systems are permitted

[**400:**6.2.1.1.1]

22.37.1.2 General Requirements for Storage of Ammonium Nitrate Solids and Liquids. Sprinkler systems shall be of the approved type and designed and installed in accordance with NFPA 13, and the following:

(1) Ammonium nitrate in noncombustible or combustible containers (paper bags or noncombustible containers with removable combustible liners) shall be designated as a Class I commodity.
(2) Where contained in plastic containers, ammonium nitrate shall be designated as a Class II commodity.
(3) Where contained in fiber packs or noncombustible containers in combustible packaging, ammonium nitrate shall be designated as a Class III commodity.

[**400:**11.2.6.1.3]

Copyright 2014 National Fire Protection Association (NFPA). Licensed, by agreement, for individual use and download on October 4, 2014 to LEADER and READER for designated user PATTARAPORN SRITRAKOOL. No other reproduction or transmission in any form permitted without written permission of NFPA. For inquires or to report unauthorized use, contact licensing@nfpa.org.

22.37.1.3 General Requirements for Storage of Organic Peroxide Formulations.

22.37.1.3.1 Where required by other provisions of this code, automatic sprinklers and water spray systems shall be designed and installed according to the requirements of NFPA 13 and NFPA 15 and shall provide the following discharge densities:

(1) Class I — 0.50 gpm/ft^2 (20.4 L/min/m^2)
(2) Class II — 0.40 gpm/ft^2 (16.3 L/min/m^2)
(3) Class III — 0.30 gpm/ft^2 (12.2 L/min/m^2)
(4) Class IV — 0.25 gpm/ft^2 (10.2 L/min/m^2)

[**400:**14.2.6.1]

22.37.1.3.2 The system shall be designed as follows:

(1) It shall provide the required density over a 3000 ft^2 (280 m^2) area for areas protected by a wet pipe sprinkler system or 3900 ft^2 (360 m^2) for areas protected by a dry pipe sprinkler system.
(2) The entire area of any building of less than 3000 ft^2 (280 m^2) shall be used as the area of application.

[**400:**14.2.6.2]

22.37.1.3.3 Where required for detached storage buildings containing Class I organic peroxide formulations in quantities exceeding 2000 lb (907 kg), automatic sprinkler protection shall be open-head deluge-type, designed and installed in accordance with NFPA 13. [**400:**14.2.6.3]

22.37.1.4 Indoor Storage of Oxidizer Solids and Liquids.

22.37.1.4.1 Sprinkler protection for Class 2 oxidizers shall be designed in accordance with Table 22.37.1.4.1. [**400:**15.3.2.3.4.1]

22.37.1.4.2 Ceiling sprinklers shall be high-temperature sprinklers. [**400:**15.3.2.3.4.2]

22.37.1.4.3 Storage Protection for Class 2 Oxidizers with In-Rack Sprinklers.

(A) In-rack sprinklers shall be quick-response sprinklers with an ordinary-temperature rating and have a K-factor of not less than K = 8.0. [**400:**15.3.2.3.4.3(A)]

(B) In-rack sprinklers shall be designed to provide 25 psi (172 kPa) for the six most hydraulically remote sprinklers on each level. [**400:**15.3.2.3.4.3(B)]

(C) The in-rack sprinklers shall be 8 ft to 10 ft (2.4 m to 3.0 m) spacings in the longitudinal flue space at the intersection of the transverse flue spaces. [**400:**15.3.2.3.4.3(C)]

22.37.1.4.4 Sprinkler Criteria for Class 3 Oxidizers.

22.37.1.4.4.1 Class 3 Oxidizers Less than 2300 lb (1043 kg).

(A) Sprinkler design criteria for buildings that require sprinkler protection and contain total quantities of Class 3 oxidizers less than 2300 lb (1043 kg) shall be in accordance with the requirements of 22.37.1.4.4.1(B). [**400:**15.3.2.4.13.1(A)]

(B) Facilities that require sprinkler protection and contain total quantities of Class 3 oxidizers greater than 200 lb (91 kg), but less than 2300 lb (1043 kg), shall follow the sprinkler design criteria in Table 22.37.1.4.4.1(B). [**400:**15.3.2.4.13.1(B)]

22.37.1.4.4.2 Storage Protection for Class 3 Oxidizers In-Rack Sprinkler Criteria.

(A) Where required by Table 22.37.1.4.4.1(B), in-rack sprinkler protection shall be as follows:

(1) In-rack sprinklers shall be installed above every level of oxidizer storage.
(2) In-rack sprinklers shall be spaced at maximum 4 ft (1.2 m) intervals to provide one sprinkler in each flue space.
(3) In-rack sprinklers shall be quick-response sprinklers with an ordinary-temperature rating and have a K-factor of not less than K = 8.0.
(4) In-rack sprinklers shall be designed to provide 25 psi (172 kPa) for the six most hydraulically remote sprinklers on each level.

[**400:**15.3.2.4.13.3(A)]

2.37.1.4.4.3 Class 3 Oxidizers Greater than or Equal to 2300 lb (1043 kg). The sprinkler protection shall be in accordance with Table 22.37.1.4.4.3. [**400:**15.3.2.4.13.4(B)]

Table 22.37.1.4.1 Ceiling Sprinkler Protection for Class 2 Oxidizers in Palletized or Bulk and Rack Storage Areas

	Ceiling Sprinklers						
	Storage Height		Density		Area of Application		
Type of Storage	ft	m	gpm/ft^2	L/min/m^2	ft^2	m^2	In-Rack Sprinklers
Palletized or bulk	8	2.4	0.20	8	3750	348	—
Palletized or bulk	12	3.7	0.35	14	3750	348	—
Rack	12	3.7	0.20	8	3750	348	One line above each level of storage, except the top level
Rack	16	4.9	0.30	12	2000	186	One line above each level of storage, except the top level

[**400:** Table 15.3.2.3.2.10(B)]

Copyright 2014 National Fire Protection Association (NFPA). Licensed, by agreement, for individual use and download on October 4, 2014 to LEADER and READER for designated user PATTARAPORN SRITRAKOOL. No other reproduction or transmission in any form permitted without written permission of NFPA. For inquires or to report unauthorized use, contact licensing@nfpa.org.

Table 22.37.1.4.4.1(B) Sprinkler Protection of Class 3 Oxidizers Stored in Total Quantities Greater than 200 lb (91 kg) but Less than 2300 lb (1043 kg)

Storage Parameters	Shelf	Bulk or Pile	Bulk or Pile	Rack
Maximum storage height	6 ft (1.8 m)	5 ft (1.5 m)	10 ft (3 m)	10 ft (3 m)
Maximum ceiling height	25 ft (7.6 m)	25 ft (7.6 m)	25 ft (7.6 m)	NA
Aisles — pile separation	4 ft (1.2 m) min. clear aisles	4 ft (1.2 m) min. clear aisles	8 ft (2.4 m) min. clear aisles	8 ft (2.4 m) min. clear aisles
Ceiling design criteria	0.45 gpm/ft^2/2000 ft^2	0.35 gpm/ft^2/or 5000 ft^2 or 0.6 gpm/2000 ft^2	0.65 gpm/ft^2/5000 ft^2	0.35 gpm/ft^2/or 5000 ft^2 or 0.6 gpm/ft^2/2000 ft^2
In-rack sprinklers	NP	NP	NA	See 15.3.2.4.12.2.
Hose stream demand	500 gpm	500 gpm	500 gpm	500 gpm
Duration	120 minutes	120 minutes	120 minutes	120 minutes

For SI units, 1 gal = 3.79 L. NA: Not applicable. NP: Not permitted.
[**400:** Table 15.3.2.4.12.1(B)]

Table 22.37.1.4.4.3 Sprinkler Protection of Class 3 Oxidizers Stored in Total Quantities of Greater than or Equal to 2300 lb (1043 kg)

Storage Parameters	Bulk or Pile	Rack
Maximum storage height	5 ft (1.5 m)	10 ft (3 m)
Maximum ceiling height	25 ft (7.6 m)	NP
Aisles — pile separation	8 ft (2.4 m) min. clear aisles	8 ft (2.4 m) min. clear aisles
Ceiling design criteria	0.35 gpm/ft^2/5000 ft^2 (1.32 L/min/m^2/464.5 m^2)	Predominant for other commodities but not less than ordinary hazard Group II
In-rack sprinklers	NP	See 15.3.2.4.12.4
Hose stream demand	500 gpm (1893 L/min)	500 gpm (1893 L/min)
Duration	120 minutes	120 minutes

NP: Not permitted.
[**400:** Table 15.3.2.4.12.3(B)]

22.37.1.4.4.4 Special In-Rack Sprinkler Protection for Class 3 Oxidizers.

(A) Where required by Table 22.37.1.4.4.3, special in-rack sprinkler protection shall be as shown in Figure 22.37.1.4.4.4(A). [**400:**15.3.2.4.13.5(A)]

(B) In-rack automatic sprinklers shall be provided under each horizontal barrier and arranged in accordance with 22.37.1.4.4.4(C) through 22.37.1.4.4.4(I). [**400:**15.3.2.4.13.5(K)]

(C) For double-row racks, two lines of in-rack sprinklers shall be provided between the face of the rack and the longitudinal vertical barrier located in the center of the rack. [**400:**15.3.2.4.13.5(L)]

(D) For single-row racks, two lines of in-rack sprinklers shall be provided between each rack face. [**400:**15.3.2.4.13.5(M)]

(E) Three in-rack sprinklers shall be provided on each in-rack sprinkler line as follows:

(1) Two sprinklers on each line shall be spaced approximately 1½ in. (38.1 mm) from each transverse vertical barrier.
(2) One in-rack sprinkler on each in-rack sprinkler line shall be located approximately equidistant between the transverse vertical barriers.

[**400:**15.3.2.4.13.5(N)]

(F) In-rack sprinklers shall be of the upright or pendent type, with the fusible element located no more than 6 in. (152.4 mm) from the horizontal barrier. [**400:**15.3.2.4.13.5(O)]

(G) In-rack sprinklers shall be K = 8.0, quick-response, ordinary-temperature-rated sprinklers. [**400:**15.3.2.4.13.5(Q)]

(H) The in-rack sprinkler system shall be designed to supply 6 sprinklers on each line, with a total of 12 sprinklers operating at gauge pressure of 25 psi (172 kPa). [**400:**15.3.2.4.13.5(R)]

(I) The design of the in-rack sprinkler system shall be independent of, and shall not be required to be balanced with, ceiling sprinkler systems. [**400:**15.3.2.4.13.5(S)]

22.37.1.4.4.5 Sprinkler Criteria for Class 4 Oxidizers.

(A) Sprinkler protection for Class 4 oxidizers shall be installed on a deluge sprinkler system to provide water density of 0.35 gpm/ft^2 (14.4 L/min/m^2) over the entire storage area. [**400:**15.3.2.5.4.6(A)]

(B) Sprinkler protection shall be installed in accordance with NFPA 13. [**400:**15.3.2.5.4.6(B)]

22.37.2 Installation Requirements. (Reserved)

Copyright 2014 National Fire Protection Association (NFPA). Licensed, by agreement, for individual use and download on October 4, 2014 to LEADER and READER for designated user PATTARAPORN SRITRAKOOL. No other reproduction or transmission in any form permitted without written permission of NFPA. For inquires or to report unauthorized use, contact licensing@nfpa.org.

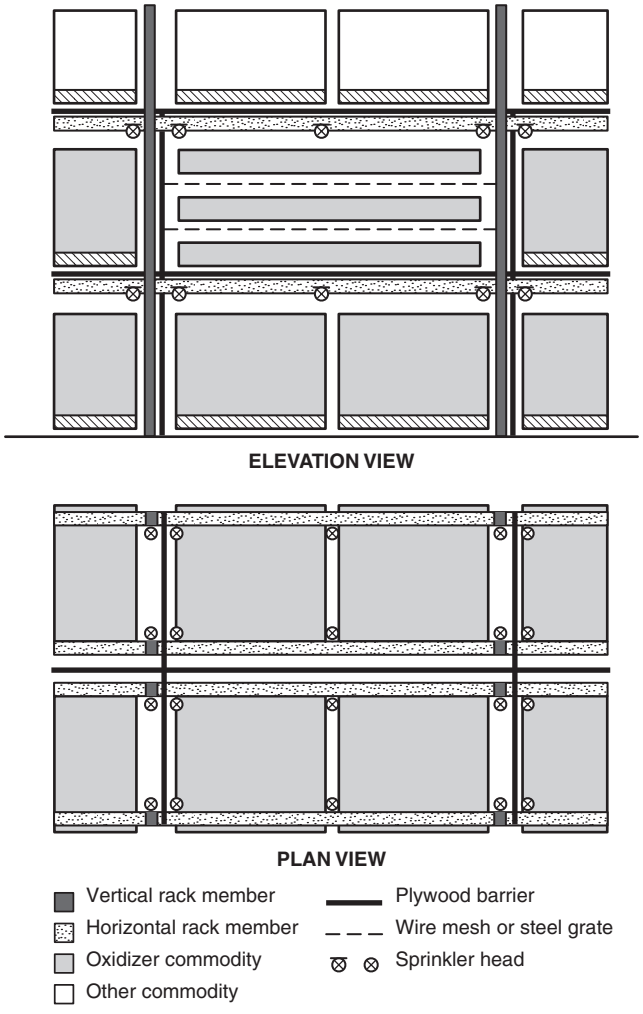

FIGURE 22.37.1.4.4.4(A) Arrangement of Barriers and In-Rack Sprinklers for Special Fire Protection Provisions. [400: Figure 15.3.2.4.13.5(A)]

Chapter 23 Plans and Calculations

23.1* Working Plans.

23.1.1* Working plans shall be submitted for approval to the authority having jurisdiction before any equipment is installed or remodeled.

23.1.2 Deviation from approved plans shall require permission of the authority having jurisdiction.

23.1.3 Working plans shall be drawn to an indicated scale, on sheets of uniform size, with a plan of each floor, and shall show those items from the following list that pertain to the design of the system:

(1) Name of owner and occupant.
(2) Location, including street address.
(3) Point of compass.
(4) Full height cross section, or schematic diagram, including structural member information if required for clarity and including ceiling construction and method of protection for nonmetallic piping.
(5) Location of partitions.
(6) Location of fire walls.
(7) Occupancy class of each area or room.
(8) Location and size of concealed spaces, closets, attics, and bathrooms.
(9) Any small enclosures in which no sprinklers are to be installed.
(10) Size of city main in street and whether dead end or circulating; if dead end, direction and distance to nearest circulating main; and city main test results and system elevation relative to test hydrant.
(11) Other sources of water supply, with pressure or elevation.
(12) Make, type, model, and nominal K-factor of sprinklers including sprinkler identification number.
(13) Temperature rating and location of high-temperature sprinklers.
(14) Total area protected by each system on each floor.
(15) Number of sprinklers on each riser per floor.
(16) Total number of sprinklers on each dry pipe system, preaction system, combined dry pipe–preaction system, or deluge system.
(17) Approximate capacity in gallons of each dry pipe system.
(18) Pipe type and schedule of wall thickness.
(19) Nominal pipe size and cutting lengths of pipe (or center-to-center dimensions). Where typical branch lines prevail, it shall be necessary to size only one typical line.
(20) Location and size of riser nipples.
(21) Type of fittings and joints and location of all welds and bends. The contractor shall specify on drawing any sections to be shop welded and the type of fittings or formations to be used.
(22) Type and locations of hangers, sleeves, braces, and methods of securing sprinklers when applicable.
(23) All control valves, check valves, drain pipes, and test connections.
(24) Make, type, model, and size of alarm or dry pipe valve.
(25) Make, type, model, and size of preaction or deluge valve.
(26) Kind and location of alarm bells.
(27) Size and location of standpipe risers, hose outlets, hand hose, monitor nozzles, and related equipment.
(28) Private fire service main sizes, lengths, locations, weights, materials, point of connection to city main; the sizes, types and locations of valves, valve indicators, regulators, meters, and valve pits; and the depth that the top of the pipe is laid below grade.
(29) Piping provisions for flushing.
(30) Where the equipment is to be installed as an addition to an existing system, enough of the existing system indicated on the plans to make all conditions clear.
(31) For hydraulically designed systems, the information on the hydraulic data nameplate.
(32) A graphic representation of the scale used on all plans.
(33) Name and address of contractor.
(34) Hydraulic reference points shown on the plan that correspond with comparable reference points on the hydraulic calculation sheets.
(35) The minimum rate of water application (density or flow or discharge pressure), the design area of water application, in-rack sprinkler demand, and the water required for hose streams both inside and outside.
(36) The total quantity of water and the pressure required noted at a common reference point for each system.
(37) Relative elevations of sprinklers, junction points, and supply or reference points.

Copyright 2014 National Fire Protection Association (NFPA). Licensed, by agreement, for individual use and download on October 4, 2014 to LEADER and READER for designated user PATTARAPORN SRITRAKOOL. No other reproduction or transmission in any form permitted without written permission of NFPA. For inquires or to report unauthorized use, contact licensing@nfpa.org.

(38) If room design method is used, all unprotected wall openings throughout the floor protected.
(39) Calculation of loads for sizing and details of sway bracing.
(40) The setting for pressure-reducing valves.
(41) Information about backflow preventers (manufacturer, size, type).

Item 42 of 23.1.3 was revised by a tentative interim amendment (TIA). See page 1.

(42) Information about listed antifreeze solution used (type and amount).
(43) Size and location of hydrants, showing size and number of outlets and if outlets are to be equipped with independent gate valves. Whether hose houses and equipment are to be provided, and by whom, shall be indicated. Static and residual hydrants that were used in flow tests shall be shown.
(44) Size, location, and piping arrangement of fire department connections.
(45) Ceiling/roof heights and slopes not shown in the full height cross section.
(46) Edition year of NFPA 13 to which the sprinkler system is designed.

23.1.4* A signed copy of the owner's certificate and the working plan submittal shall include the manufacturer's installation instructions for any specially listed equipment, including descriptions, applications, and limitations for any sprinklers, devices, piping, or fittings.

23.1.5* Working Plans for Automatic Sprinkler Systems with Non–Fire Protection Connections.

23.1.5.1 Special symbols shall be used and explained for auxiliary piping, pumps, heat exchangers, valves, strainers, and the like, clearly distinguishing these devices and piping runs from those of the sprinkler system.

23.1.5.2 Model number, type, and manufacturer's name shall be identified for each piece of auxiliary equipment.

23.2 Water Supply Information.

23.2.1 Water Supply Capacity Information. The following information shall be included:

(1) Location and elevation of static and residual test gauge with relation to the riser reference point
(2) Flow location
(3) Static pressure, psi (bar)
(4) Residual pressure, psi (bar)
(5) Flow, gpm (L/min)
(6) Date
(7) Time
(8) Name of person who conducted the test or supplied the information
(9) Other sources of water supply, with pressure or elevation

23.2.1.1* Where a waterflow test is used for the purposes of system design, the test shall be conducted no more than 12 months prior to working plan submittal unless otherwise approved by the authority having jurisdiction.

23.2.2 Water Supply Treatment Information. The following information shall be included when water supply treatment is provided in accordance with 24.1.5:

(1) Type of condition that requires treatment
(2) Type of treatment needed to address the problem
(3) Details of treatment plan

23.3 Hydraulic Calculation Forms.

23.3.1 General. Hydraulic calculations shall be prepared on form sheets that include a summary sheet, detailed worksheets, and a graph sheet. *[See Figure A.23.3.2(a), Figure A.23.3.3, and Figure A.23.3.4 for copies of typical forms.]*

23.3.2* Summary Sheet. The summary sheet shall contain the following information, where applicable:

(1) Date
(2) Location
(3) Name of owner and occupant
(4) Building number or other identification
(5) Description of hazard (for storage applications, the commodity classification, storage height, and rack configuration shall be included)
(6) Name and address of contractor or designer
(7) Name of approving agency
(8) System design requirements, as follows:
  (a) Design area of water application, ft^2 (m^2).
  (b) Minimum rate of water application (density), gpm/ft^2 (mm/min). Where sprinklers are listed with minimum water application in gpm (L/min) or pressure in psi (bar), the minimum rate of water application shall be indicated in gpm (L/min) or pressure, psi (bar).
  (c) Area per sprinkler, ft^2 (m^2).
(9) Total water requirements as calculated, including allowance for inside hose, outside hydrants, and water curtain and exposure sprinklers
(10) Allowance for in-rack sprinklers, gpm (L/min)
(11) Limitations (dimension, flow, and pressure) on extended coverage or other listed special sprinklers

23.3.3* Detailed Worksheets. Detailed worksheets or computer printout sheets shall contain the following information:

(1) Sheet number
(2) Sprinkler description and discharge constant *(K)*
(3) Hydraulic reference points
(4) Flow in gpm (L/min)
(5) Pipe size
(6) Pipe lengths, center-to-center of fittings
(7) Equivalent pipe lengths for fittings and devices
(8) Friction loss in psi/ft (bar/m) of pipe
(9) Total friction loss between reference points
(10) In-rack sprinkler demand balanced to ceiling demand
(11) Elevation head in psi (bar) between reference points
(12) Required pressure in psi (bar) at each reference point
(13) Velocity pressure and normal pressure if included in calculations
(14) Notes to indicate starting points or reference to other sheets or to clarify data shown
(15)* Diagram to accompany gridded system calculations to indicate flow quantities and directions for lines with sprinklers operating in the remote area
(16) Combined K-factor calculations for sprinklers on drops, armovers, or sprigs where calculations do not begin at the sprinkler

23.3.4* Graph Sheet. A graphic representation of the complete hydraulic calculation shall be plotted on semiexponential graph paper ($Q^{1.85}$) and shall include the following:

(1) Water supply curve
(2) Sprinkler system demand
(3) Hose allowance (where applicable)
(4) In-rack sprinkler demand (where applicable)

Copyright 2014 National Fire Protection Association (NFPA). Licensed, by agreement, for individual use and download on October 4, 2014 to LEADER and READER for designated user PATTARAPORN SRITRAKOOL. No other reproduction or transmission in any form permitted without written permission of NFPA. For inquires or to report unauthorized use, contact licensing@nfpa.org.

23.3.5 Computer-Generated Hydraulic Reports.

23.3.5.1* General.

23.3.5.1.1 Hydraulic calculations shall be prepared on form sheets that include a summary sheet, a graph sheet, a water supply analysis, a node analysis, and detailed worksheets.

23.3.5.1.2 The data shall be presented in the order shown in Figure 23.3.5.1.2(a) through Figure 23.3.5.1.2(d).

23.3.5.2 Summary Sheet. The summary sheet as shown in Figure 23.3.5.1.2(a) shall contain the following information, where applicable:

(1) Project name and date
(2) Location (including street address)
(3) Drawing number
(4) Remote area number
(5) Remote area location
(6) Occupancy or commodity classification
(7) System design requirements, as follows:
  (a) Design area of water application, ft^2 (m^2)
  (b) Minimum rate of water application (density), gpm/ft^2 (mm/min)
  (c) Area per sprinkler, ft^2 (m^2)
(8) Total water requirements as calculated, including allowance for inside hose, outside hydrants, water curtain and exposure sprinklers, and allowance for in-rack sprinklers, gpm (L/min)
(9) Type of system and, if dry or preaction, the volume of the system in gallons (liters)
(10) Water supply information, including the following:
  (a) Date
  (b) Location
  (c) Source
  (d) Elevation relative to finished floor
(11) Name and address of installing contractor
(12) Name of designer
(13) Authority having jurisdiction
(14) Notes that include items such as peaking information for calculations performed by a computer program, limitations (dimension, flow, and pressure) on extended-coverage or other listed special sprinklers

23.3.5.3 Graph Sheet. A graphic representation of the complete hydraulic calculation shall be plotted on semiexponential graph paper ($Q^{1.85}$) as shown in Figure 23.3.5.1.2(b) and shall include the following:

(1) Water supply curve
(2) Sprinkler system demand
(3) Hose demand (where applicable)
(4) In-rack sprinkler demand (where applicable)
(5) Additional pressures supplied by a fire pump or other source (when applicable)

23.3.5.4 Supply Analysis. Information summarized from the graph sheet as shown in Figure 23.3.5.1.2(c) shall include the following:

(1) Node tag at the source
(2) Static pressure [psi (bar)] available at the source
(3) Residual pressure [psi (bar)] available at the source
(4) Total flow [gpm (L/min)] available at the source
(5) Available pressure [psi (bar)] at the source when the total calculated demand is flowing
(6) Total calculated demand [gpm (L/min)] at the source
(7) Required pressure [psi (bar)] when flowing total calculated demand

23.3.5.5 Node Analysis. Organized information as shown in Figure 23.3.5.1.2(c) regarding the node tags given to each hydraulic reference point on the system as indicated on the shop drawings shall include the following information:

(1) Node tag for each specific point on the system used in the hydraulic calculations
(2) Elevation in ft (m) of each node tag
(3) K-factor of flowing nodes (such as sprinklers)
(4) Hose allowance in gpm (L/min) requirements for the node tag
(5) Pressure in psi (bar) at the node
(6) Discharge in gpm (L/min) calculated at the node
(7) Notes that indicate any special requirements for the node

23.3.5.6 Detailed Worksheets. Detailed worksheets as shown in Figure 23.3.5.1.2(d) or computer printout sheets shall contain the following information:

(1) Sheet number
(2) Hydraulic reference points used in each step
(3) Elevation in ft (m) at each hydraulic reference point
(4) Sprinkler description and discharge constant (K) for the flowing reference point
(5) Flow in gpm (L/min) for the flowing reference point (when applicable)
(6) Total flow in gpm (L/min) through each step
(7) Nominal pipe size in in. (mm)
(8) Actual internal diameter of pipe in in. (mm)
(9) Quantity and length in ft (m) of each type of fitting and device
(10) Pipe lengths in ft (m), center-to-center of fittings
(11) Equivalent pipe lengths in ft (m) of fittings and devices for the step
(12) Total equivalent length in ft (m) of pipes and fitting for the step
(13) C-factor used in each step
(14) Friction loss in psi/ft (bar/m) of pipe
(15) Sum of the pressures from the previous step (starting pressure at beginning)
(16) Elevation head in psi (bar) between reference points
(17) Total friction loss in psi (bar) between reference points
(18) Required pressure in psi (bar) at each reference point
(19) Notes and other information shall include the following:
  (a) Velocity pressure and normal pressure if included in calculations
  (b) In-rack sprinkler demand balanced to ceiling demand
  (c) Notes to indicate starting points or reference to other sheets or to clarify data shown
  (d) Diagram to accompany gridded system calculations to indicate flow quantities and directions for lines with sprinklers operating in the remote area
  (e) Combined K-factor calculations for sprinklers on drops, armovers, or sprigs where calculations do not begin at the sprinkler
  (f) The pressure [psi/(bar)] loss assigned the backflow device when included on a system
  (g) Friction factor and Reynold's number when the Darcy–Weisbach equation is used

Copyright 2014 National Fire Protection Association (NFPA). Licensed, by agreement, for individual use and download on October 4, 2014 to LEADER and READER for designated user PATTARAPORN SRITRAKOOL. No other reproduction or transmission in any form permitted without written permission of NFPA. For inquires or to report unauthorized use, contact licensing@nfpa.org.

HYDRAULIC CALCULATIONS
for

Project name: _____

Location: _____

Drawing no.: _____ Date: _____

Design

Remote area number: _____

Remote area location: _____

Occupancy classification: _____

Density: _____ gpm/ft^2

Area of application: _____ ft^2

Coverage per sprinkler: _____ ft^2

Type of sprinklers calculated: _____

No. of sprinklers calculated: _____

In-rack demand: _____

Hose streams: _____

Total water required (including hose streams): _____ gpm @ _____ psi

Type of system: _____

Volume of dry or preaction system: _____ gal

Water supply information

Date: _____

Location: _____

Source: _____

Name of contractor: _____

Address: _____

Phone number: _____

Name of designer: _____

Authority having jurisdiction: _____

Notes: (Include peaking information or gridded systems here.) _____

_____

_____

_____

© 2012 National Fire Protection Association NFPA 13

FIGURE 23.3.5.1.2(a) Summary Sheet.

Copyright 2014 National Fire Protection Association (NFPA). Licensed, by agreement, for individual use and download on October 4, 2014 to LEADER and READER for designated user PATTARAPORN SRITRAKOOL. No other reproduction or transmission in any form permitted without written permission of NFPA. For inquires or to report unauthorized use, contact licensing@nfpa.org.

FLOW TEST SUMMARY SHEET

$N^{1.85}$

Contract name and number: _____

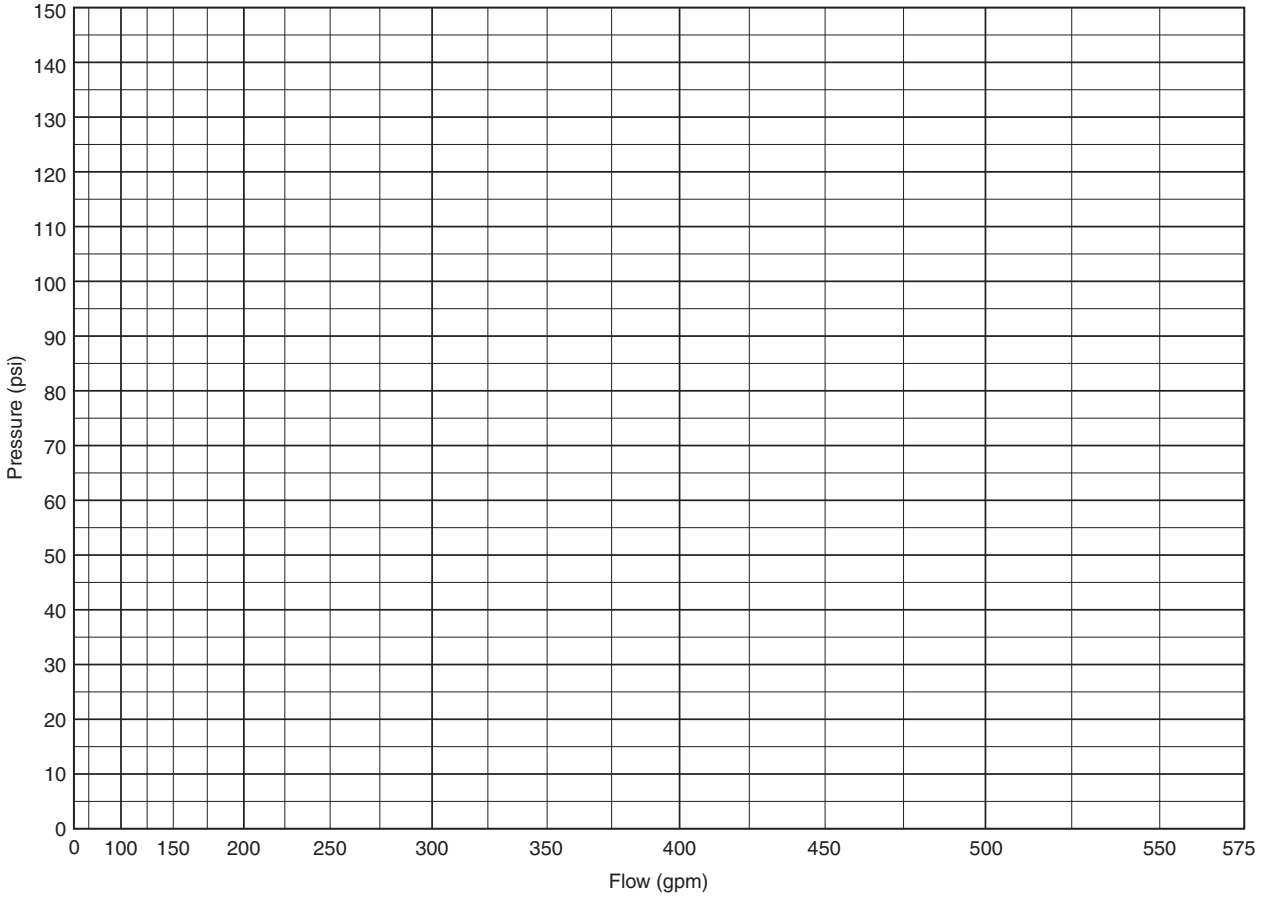

Notes: _____

© 2012 National Fire Protection Association NFPA 13

FIGURE 23.3.5.1.2(b) Graph Sheet.

Copyright 2014 National Fire Protection Association (NFPA). Licensed, by agreement, for individual use and download on October 4, 2014 to LEADER and READER for designated user PATTARAPORN SRITRAKOOL. No other reproduction or transmission in any form permitted without written permission of NFPA. For inquires or to report unauthorized use, contact licensing@nfpa.org.

SUPPLY ANALYSIS

Node at Source	Static Pressure	Residual Pressure	Flow	Available Pressure	Total Demand	Required Pressure
Data	Data	Data	Data	Data	Data	Data

NODE ANALYSIS

Node Tag	Elevation	Node Type	Pressure at Node	Discharge at Node	Notes
Data	Data	Data	Data	Data	Data
Data	Data	Data	Data	Data	Data
Data	Data	Data	Data	Data	Data
Data	Data	Data	Data	Data	Data
Data	Data	Data	Data	Data	Data
Data	Data	Data	Data	Data	Data
Data	Data	Data	Data	Data	Data
Data	Data	Data	Data	Data	Data
Data	Data	Data	Data	Data	Data
Data	Data	Data	Data	Data	Data
Data	Data	Data	Data	Data	Data
Data	Data	Data	Data	Data	Data
Data	Data	Data	Data	Data	Data
Data	Data	Data	Data	Data	Data

© 2012 National Fire Protection Association NFPA 13

FIGURE 23.3.5.1.2(c) Supply and Node Analysis Sheet.

Copyright 2014 National Fire Protection Association (NFPA). Licensed, by agreement, for individual use and download on October 4, 2014 to LEADER and READER for designated user PATTARAPORN SRITRAKOOL. No other reproduction or transmission in any form permitted without written permission of NFPA. For inquires or to report unauthorized use, contact licensing@nfpa.org.

Job name: _____ Sheet number: _____

PIPE INFORMATION

Node 1	Elev 1 (ft)	K-Factor	Flow added — this step (q)	Nominal ID	Fittings—quantity and length	L ft	C Factor	total (P_t)	Notes
						F ft	P_f per foot (psi)	elev (P_e)	
Node 2	Elev 2 (ft)		Total flow (Q)	Actual ID		T ft		frict (P_f)	
data 1	data 1	data 1	data 1	data	data	data	data	data 1	data
					data	data	data	data	
data 2	data 2		data	data					
					data	data		data	
data 1	data 1	data 1	data 1	data	data	data	data	data 1	data
					data	data	data	data	
data 2	data 2		data	data					
					data	data		data	
data 1	data 1	data 1	data 1	data	data	data	data	data 1	data
					data	data	data	data	
data 2	data 2		data	data					
					data	data		data	
data 1	data 1	data 1	data 1	data	data	data	data	data 1	data
					data	data	data	data	
data 2	data 2		data	data					
					data	data		data	
data 1	data 1	data 1	data 1	data	data	data	data	data 1	data
					data	data	data	data	
data 2	data 2		data	data					
					data	data		data	
data 1	data 1	data 1	data 1	data	data	data	data	data 1	data
					data	data	data	data	
data 2	data 2		data	data					
					data	data		data	
data 1	data 1	data 1	data 1	data	data	data	data	data 1	data
					data	data	data	data	
data 2	data 2		data	data					
					data	data		data	

© 2012 National Fire Protection Association NFPA 13

FIGURE 23.3.5.1.2(d) Detailed Worksheet.

Copyright 2014 National Fire Protection Association (NFPA). Licensed, by agreement, for individual use and download on October 4, 2014 to LEADER and READER for designated user PATTARAPORN SRITRAKOOL. No other reproduction or transmission in any form permitted without written permission of NFPA. For inquires or to report unauthorized use, contact licensing@nfpa.org.

23.4 Hydraulic Calculation Procedures.

23.4.1* General.

23.4.1.1 A calculated system for a building, or a calculated addition to a system in an existing sprinklered building, shall supersede the rules in this standard governing pipe schedules, except that all systems shall continue to be limited by area.

23.4.1.2 Pipe sizes shall be no less than 1 in. (25 mm) nominal for ferrous piping and ¾ in. (20 mm) nominal for copper tubing or nonmetallic piping listed for fire sprinkler service.

23.4.1.3 The size of pipe, number of sprinklers per branch line, and number of branch lines per cross main shall otherwise be limited only by the available water supply.

23.4.1.4 However, sprinkler spacing and all other rules covered in this and other applicable standards shall be observed.

23.4.1.5 Hydraulic calculations shall extend to the effective point of the water supply where the characteristics of the water supply are known.

23.4.2 Formulas.

23.4.2.1 Friction Loss Formula.

23.4.2.1.1 Pipe friction losses shall be determined on the basis of the Hazen–Williams formula, as follows:

$$p = \frac{4.52Q^{1.85}}{C^{1.85}d^{4.87}}$$

where:
p = frictional resistance (psi/ft of pipe)
Q = flow (gpm)
C = friction loss coefficient
d = actual internal diameter of pipe (in.)

23.4.2.1.2 For SI units, the following equation shall be used:

$$p_m = 6.05\left(\frac{Q_m^{1.85}}{C^{1.85}d_m^{4.87}}\right)10^5$$

where:
p_m = frictional resistance (bar/m of pipe)
Q_m = flow (L/min)
C = friction loss coefficient
d_m = actual internal diameter (mm)

Subsection 23.4.2.1.3 was revised by a tentative interim amendment (TIA). See page 1.

23.4.2.1.3 For antifreeze systems greater than 40 gal (151 L) in size, the friction loss shall also be calculated using the Darcy–Weisbach formula:

$$\Delta P = 0.000216 f \frac{l\rho Q^2}{d^5}$$

where:
ΔP = friction loss (psi)
f = friction loss factor from Moody diagram
l = length of pipe or tube (ft)
ρ = density of fluid (lb/ft^3)
Q = flow in pipe or tube (gpm)
d = inside diameter of tube (in.)

23.4.2.2 Velocity Pressure Formula. Velocity pressure shall be determined on the basis of the following formula:

$$P_v = \frac{0.001123Q^2}{D^4}$$

where:
P_v = velocity pressure (psi) (SI, 1 psi = 0.0689 bar)
Q = flow (gpm) (SI, 1 gal = 3.785 L)
D = inside diameter (in.) (SI, 1 in. = 25.4 mm)

23.4.2.3 Normal Pressure Formula. Normal pressure (P_n) shall be determined on the basis of the following formula:

$$P_n = P_t - P_v$$

where:
P_n = normal pressure
P_t = total pressure [psi (bar)]
P_v = velocity pressure [psi (bar)]

23.4.2.4 Hydraulic Junction Points.

23.4.2.4.1 Pressures at hydraulic junction points shall balance within 0.5 psi (0.03 bar).

23.4.2.4.2 The highest pressure at the junction point, and the total flows as adjusted, shall be carried into the calculations.

23.4.2.4.3 Pressure balancing shall be permitted through the use of a K-factor developed for branch lines or portions of systems using the formula in 23.4.2.5.

23.4.2.5 K-Factor Formula. K-factors, flow from an orifice, or pressure from an orifice shall be determined on the basis of the following formula:

$$K_n = \frac{Q}{\sqrt{P}}$$

where:
K_n = equivalent K at a node
Q = flow at the node
P = pressure at the node

23.4.3 Equivalent Pipe Lengths of Valves and Fittings.

23.4.3.1 Pipe and Fittings.

23.4.3.1.1 Table 23.4.3.1.1 shall be used to determine the equivalent length of pipe for fittings and devices unless manufacturer's test data indicate that other factors are appropriate.

23.4.3.1.2 For saddle-type fittings having friction loss greater than that shown in Table 23.4.3.1.1, the increased friction loss shall be included in hydraulic calculations.

23.4.3.1.3 Equivalent Length Modifier.

23.4.3.1.3.1 For internal pipe diameters different from Schedule 40 steel pipe [Schedule 30 for pipe diameters 8 in. (200 mm) and larger], the equivalent length shown in Table 23.4.3.1.1 shall be multiplied by a factor derived from the following formula:

$$\left(\frac{\text{Actual inside diameter}}{\text{Schedule 40 steel pipe inside diameter}}\right)^{4.87} = \text{Factor}$$

23.4.3.1.3.2 The factor thus obtained shall be further modified as required by Table 23.4.3.1.1. This table shall apply to other types of pipe listed in Table 23.4.3.1.1 only where modified by factors from 23.4.3.1.1 and 23.4.3.2.

Copyright 2014 National Fire Protection Association (NFPA). Licensed, by agreement, for individual use and download on October 4, 2014 to LEADER and READER for designated user PATTARAPORN SRITRAKOOL. No other reproduction or transmission in any form permitted without written permission of NFPA. For inquires or to report unauthorized use, contact licensing@nfpa.org.

Table 23.4.3.1.1 Equivalent Schedule 40 Steel Pipe Length Chart

	Fittings and Valves Expressed in Equivalent Feet (Meters) of Pipe														
	½ in.	¾ in.	1 in.	1¼ in.	1½ in.	2 in.	2½ in.	3 in.	3½ in.	4 in.	5 in.	6 in.	8 in.	10 in.	12 in.
Fittings and Valves	**(15 mm)**	**(20 mm)**	**(25 mm)**	**(32 mm)**	**(40 mm)**	**(50 mm)**	**(65 mm)**	**(80 mm)**	**(90 mm)**	**(100 mm)**	**(125 mm)**	**(150 mm)**	**(200 mm)**	**(250 mm)**	**(300 mm)**
45° elbow	—	1 (0.3)	1 (0.3)	1 (0.3)	2 (0.6)	2 (0.6)	3 (0.9)	3 (0.9)	3 (0.9)	4 (1.2)	5 (1.5)	7 (2.1)	9 (2.7)	11 (3.4)	13 (4)
90° standard elbow	1 (0.3)	2 (0.6)	2 (0.6)	3 (0.9)	4 (1.2)	5 (1.5)	6 (1.8)	7 (2.1)	8 (2.4)	10 (3)	12 (3.7)	14 (4.3)	18 (5.5)	22 (6.7)	27 (8.2)
90° long-turn elbow	0.5 (0.2)	1 (0.3)	2 (0.6)	2 (0.6)	2 (0.6)	3 (0.9)	4 (1.2)	5 (1.5)	5 (1.5)	6 (1.8)	8 (2.4)	9 (2.7)	13 (4)	16 (4.9)	18 (5.5)
Tee or cross (flow turned 90°)	3 (0.9)	4 (1.2)	5 (1.5)	6 (1.8)	8 (2.4)	10 (3)	12 (3.7)	15 (4.6)	17 (5.2)	20 (6.1)	25 (7.6)	30 (9.1)	35 (10.7)	50 (15.2)	60 (18.3)
Butterfly valve	—	—	—	—	—	6 (1.8)	7 (2.1)	10 (3)	—	12 (3.7)	9 (2.7)	10 (3)	12 (3.7)	19 (5.8)	21 (6.4)
Gate valve	—	—	—	—	—	1 (0.3)	1 (0.3)	1 (0.3)	1 (0.3)	2 (0.6)	2 (0.6)	3 (0.9)	4 (1.2)	5 (1.5)	6 (1.8)
Swing check*	—	—	5 (1.5)	7 (2.1)	9 (2.7)	11 (3.4)	14 (4.3)	16 (4.9)	19 (5.8)	22 (6.7)	27 (8.2)	32 (9.3)	45 (13.7)	55 (16.8)	65 (20)

For SI units, 1 in. = 25.4 mm; 1 ft = 0.3048 m.

Note: Information on ½ in. pipe is included in this table only because it is allowed under 8.15.19.4 and 8.15.19.5.

*Due to the variation in design of swing check valves, the pipe equivalents indicated in this table are considered average.

23.4.3.2 *C* Factors. Table 23.4.3.1.1 shall be used with a Hazen–Williams *C* factor of 120 only.

23.4.3.2.1 For other values of *C*, the values in Table 23.4.3.1.1 shall be multiplied by the factors indicated in Table 23.4.3.2.1.

Table 23.4.3.2.1 *C* Value Multiplier

Value of *C*	100	130	140	150
Multiplying factor	0.713	1.16	1.33	1.51

Note: These factors are based upon the friction loss through the fitting being independent of the *C* factor available to the piping.

23.4.3.3 Valves. Specific friction loss values or equivalent pipe lengths for alarm valves, dry pipe valves, deluge valves, strainers, and other devices shall be made available to the authority having jurisdiction.

23.4.3.4 Differing Values. Specific friction loss values or equivalent pipe lengths for listed fittings not in Table 6.4.1 shall be used in hydraulic calculations where these losses or equivalent pipe lengths are different from those shown in Table 23.4.3.1.1.

23.4.4* Calculation Procedure.

23.4.4.1* For all systems the design area shall be the hydraulically most demanding based on the criteria of Chapter 11, Chapter 12, or the special design approaches in accordance with the requirements of Chapter 22.

23.4.4.1.1 Density/Area Method.

23.4.4.1.1.1* Where the design is based on the density/area method, the design area shall be a rectangular area having a dimension parallel to the branch lines at least 1.2 times the square root of the area of sprinkler operation *(A)* used, which shall permit the inclusion of sprinklers on both sides of the cross main.

23.4.4.1.1.2 Any fractional sprinkler shall be carried to the next higher whole sprinkler.

23.4.4.1.1.3 In systems having branch lines with an insufficient number of sprinklers to fulfill the 1.2 requirement, the design area shall be extended to include sprinklers on adjacent branch lines supplied by the same cross main.

23.4.4.1.1.4* Where the available floor area for a specific area/density design criteria, including any extension of area as required by 11.1.2 and Section 12.3, is less than the required minimum design area, the design area shall be permitted to only include those sprinklers within the available design area.

23.4.4.1.1.5 Where the total design discharge from these operating sprinklers is less than the minimum required discharge determined by multiplying the required design density times the required minimum design area, an additional flow shall be added at the point of connection of the branch line to the cross main furthest from the source to increase the overall demand, not including hose stream allowance, to the minimum required discharge as determined above.

23.4.4.1.2 Room Design Method. Where the design is based on the room design method, the calculation shall be based on the room and communicating space, if any, that is hydraulically the most demanding.

23.4.4.2 CMSA Sprinkler Method.

23.4.4.2.1 For CMSA sprinklers, the design area shall be a rectangular area having a dimension parallel to the branch lines at least 1.2 times the square root of the area protected by

Copyright 2014 National Fire Protection Association (NFPA). Licensed, by agreement, for individual use and download on October 4, 2014 to LEADER and READER for designated user PATTARAPORN SRITRAKOOL. No other reproduction or transmission in any form permitted without written permission of NFPA. For inquires or to report unauthorized use, contact licensing@nfpa.org.

the number of sprinklers to be included in the design area. The design area protected by the number of sprinklers to be used by the 1.2 rule shall be based on the maximum allowable area per sprinkler.

23.4.4.2.2 Any fractional sprinkler shall be carried to the next higher whole sprinkler.

23.4.4.3 ESFR Sprinkler Method. For ESFR sprinklers, the design area shall consist of the most hydraulically demanding area of 12 sprinklers, consisting of four sprinklers on each of three branch lines, unless other specific numbers of design sprinklers are required in other sections of this standard.

23.4.4.4* Gridded Systems.

23.4.4.4.1 For gridded systems, the designer shall verify that the hydraulically most demanding area is being used.

23.4.4.4.2 A minimum of two additional sets of calculations shall be submitted to demonstrate peaking of demand area friction loss when compared to areas immediately adjacent on either side along the same branch lines, unless the requirements of 23.4.4.4.3 are met.

23.4.4.4.3 Computer programs that show the peaking of the demand area friction loss shall be acceptable based on a single set of calculations.

23.4.4.5 Design Densities.

23.4.4.5.1* System piping shall be hydraulically designed using design densities and areas of operation in accordance with 11.2.3.2 or Chapter 12 as required for the occupancies or hazards involved.

23.4.4.5.2* The density shall be calculated on the basis of floor area of sprinkler operation. Where sprinklers are installed under a sloped ceiling, the area used for this calculation shall be the horizontal plane below the sprinklers.

23.4.4.5.3 The area covered by any sprinkler used in hydraulic design and calculations shall be the horizontal distances measured between the sprinklers on the branch line and between the branch lines in accordance with 8.5.2.

23.4.4.5.4 Where sprinklers are installed above and below a ceiling or in a case where more than two areas are supplied from a common set of branch lines, the branch lines and supplies shall be calculated to supply the largest water demand.

23.4.4.5.5* For sloped ceiling applications, the area of sprinkler application for density calculations shall be based upon the projected horizontal area.

23.4.4.6* Design Area Sprinklers.

23.4.4.6.1 Each sprinkler in the design area and the remainder of the hydraulically designed system shall discharge at a flow rate at least equal to the stipulated minimum water application rate (density) multiplied by the area of sprinkler operation.

23.4.4.6.1.1 Where sprinklers are required to discharge a specific flow or pressure rather than a density, each sprinkler in the design area shall discharge at a flow or pressure at least equal to the minimum required.

23.4.4.6.2* Where the design area is equal to or greater than the area in Table 23.4.4.6.2 for the hazard being protected by the sprinkler system, the discharge for sprinklers protecting small rooms such as closets, washrooms, and similar small compartments that are in the design area shall be permitted to be omitted from the hydraulic calculations.

Table 23.4.4.6.2 Minimum Design Area

Occupancy Hazard Classification	Minimum Design Area to Omit Discharge from Sprinklers in Small Rooms in Design Area (ft^2)
Light hazard–wet pipe system	1500
Light hazard–dry pipe system	1950
Ordinary hazard–wet pipe system	1500
Ordinary hazard–dry pipe system	1950
Extra hazard–wet pipe system	2500
Extra hazard–dry pipe system	3250

23.4.4.6.2.1 The sprinklers in these small compartments shall be capable of discharging the minimum density appropriate for the hazard they protect in accordance with Figure 11.2.3.1.1.

23.4.4.6.2.2 The requirements of 23.4.4.6.2 shall only apply where the area of application is equal to or greater than the area shown in Table 23.4.4.6.2 for the appropriate hazard classification (including a 30 percent increase for dry pipe systems).

23.4.4.6.3 The requirements of 23.4.4.6.1.1 to include every sprinkler in the design area shall not apply where spray sprinklers or CMSA sprinklers are provided above and below obstructions such as wide ducts or tables.

23.4.4.6.3.1 Sprinklers under the obstruction shall not be required to be included in the hydraulic calculation of the ceiling sprinklers.

23.4.4.6.3.2 Where the piping to sprinklers under obstructions follows the same sizing pattern as the branch lines, no additional hydraulic calculations shall be required for sprinklers under obstructions.

23.4.4.6.4 The requirements of 23.4.4.6.1.1 to include every sprinkler in the design area shall not apply where ESFR sprinklers are installed above and below obstructions.

23.4.4.6.5 Water demand of sprinklers installed in concealed spaces shall not be required to be added to the ceiling demand.

23.4.4.6.6 Calculations shall begin at the hydraulically most remote sprinkler.

23.4.4.6.7 The calculated pressure at each sprinkler shall be used to determine the discharge flow rate for that particular sprinkler.

23.4.4.6.8 Where sprinklers are installed under a sloped ceiling, the area shall be calculated on a horizontal plane below the sprinklers.

23.4.4.7 Friction Loss.

23.4.4.7.1 Pipe friction loss shall be calculated in accordance with the Hazen–Williams formula with *C* values from Table 23.4.4.7.1, as follows:

Copyright 2014 National Fire Protection Association (NFPA). Licensed, by agreement, for individual use and download on October 4, 2014 to LEADER and READER for designated user PATTARAPORN SRITRAKOOL. No other reproduction or transmission in any form permitted without written permission of NFPA. For inquires or to report unauthorized use, contact licensing@nfpa.org.

(1) Include pipe, fittings, and devices such as valves, meters, flow switches in pipes 2 in. or less in size, and strainers, and calculate elevation changes that affect the sprinkler discharge.
(2) Tie-in drain piping shall not be included in the hydraulic calculations.
(3) Calculate the loss for a tee or a cross where flow direction change occurs based on the equivalent pipe length of the piping segment in which the fitting is included.
(4) The tee at the top of a riser nipple shall be included in the branch line, the tee at the base of a riser nipple shall be included in the riser nipple, and the tee or cross at a cross main–feed main junction shall be included in the cross main.
(5) Do not include fitting loss for straight-through flow in a tee or cross.
(6) Calculate the loss of reducing elbows based on the equivalent feet value of the smallest outlet.
(7) Use the equivalent feet value for the standard elbow on any abrupt 90-degree turn, such as the screw-type pattern.
(8) Use the equivalent feet value for the long-turn elbow on any sweeping 90-degree turn, such as a flanged, welded, or mechanical joint-elbow type. *(See Table 23.4.3.1.1.)*
(9) Friction loss shall be excluded for the fitting directly connected to a sprinkler.
(10) Losses through a pressure-reducing valve shall be included based on the normal inlet pressure condition. Pressure loss data from the manufacturer's literature shall be used.

Table 23.4.4.7.1 Hazen–Williams *C* Values

Pipe or Tube	*C* Value*
Unlined cast or ductile iron	100
Black steel (dry systems including preaction)	100
Black steel (wet systems including deluge)	120
Galvanized steel (dry systems including preaction)	100
Galvanized steel (wet systems including deluge)	120
Plastic (listed) all	150
Cement-lined cast- or ductile iron	140
Copper tube or stainless steel	150
Asbestos cement	140
Concrete	140

*The authority having jurisdiction is permitted to allow other *C* values.

23.4.4.7.2* For antifreeze systems greater than 40 gal (151 L) in size, the pipe friction loss shall be calculated using the Darcy-Weisbach equation shown in 23.4.2.1.3 using a Moody diagram and ε-factors that are representative of aged pipe otherwise following the methodology presented in 23.4.4.7.1.

23.4.4.8* Orifice Plates.

23.4.4.8.1 Orifice plates shall not be used for balancing the system.

23.4.4.8.2 Unless the requirements of 23.4.4.8.3 or 23.4.4.8.4 are met, mixing of sprinklers of different K-factors by reducing the K-factor of adjacent sprinklers on the same branch line leading back to the main for the purpose of minimizing sprinkler over discharge shall not be permitted.

23.4.4.8.3 Sprinklers with different K-factors shall be acceptable for special use such as exposure protection, small rooms or enclosures, or directional discharge. *(See 3.3.21 for definition of small rooms.)*

23.4.4.8.4 Extended-coverage and residential sprinklers with a different K-factor shall be acceptable for part of the protection area where installed in accordance with their listing.

23.4.4.9* Pressures.

23.4.4.9.1 When calculating flow from an orifice, the total pressure (P_t) shall be used, unless the calculation method of 23.4.4.9.2 is utilized.

23.4.4.9.2 Use of the normal pressure (P_n) calculated by subtracting the velocity pressure from the total pressure shall be permitted. Where the normal pressure is used, it shall be used on all branch lines and cross mains where applicable.

23.4.4.9.3 Flow from a sprinkler shall be calculated using the nominal K-factor except that the manufacturer's adjusted K-factors shall be utilized for dry-type sprinklers.

23.4.4.10 Minimum Operating Pressure.

23.4.4.10.1 Minimum operating pressure of any sprinkler shall be 7 psi (0.5 bar).

23.4.4.10.2 Where a higher minimum operating pressure for the desired application is specified in the listing of the sprinkler, this higher pressure shall be required.

23.4.4.11 Maximum Operating Pressure. For extra hazard occupancies, palletized, solid-piled, bin box, back-to-back shelf storage, shelf storage, or rack storage, the maximum operating pressure of any sprinkler shall be 175 psi (12.1 bar).

23.5 Pipe Schedules. Pipe schedules shall not be used, except in existing systems and in new systems or extensions to existing systems described in Chapter 11. Water supplies shall conform to 11.2.2.

23.5.1* General.

23.5.1.1 The pipe schedule sizing provisions shall not apply to hydraulically calculated systems.

23.5.1.2 Sprinkler systems having sprinklers with K-factors other than 5.6 nominal, listed piping material other than that covered in Table 6.3.1.1, extra hazard Group 1 and Group 2 systems, and exposure protection systems shall be hydraulically calculated.

23.5.1.3 The number of automatic sprinklers on a given pipe size on one floor shall not exceed the number given in 23.5.2, 23.5.3, or 23.5.4 for a given occupancy.

23.5.1.4* Size of Risers. Each system riser shall be sized to supply all sprinklers on the riser on any one floor as determined by the standard schedules of pipe sizes in 23.5.2, 23.5.3, or 23.5.4.

23.5.1.5 Slatted Floors, Large Floor Openings, Mezzanines, and Large Platforms. Buildings having slatted floors or large unprotected floor openings without approved stops shall be treated as one area with reference to pipe sizes, and the feed

Copyright 2014 National Fire Protection Association (NFPA). Licensed, by agreement, for individual use and download on October 4, 2014 to LEADER and READER for designated user PATTARAPORN SRITRAKOOL. No other reproduction or transmission in any form permitted without written permission of NFPA. For inquires or to report unauthorized use, contact licensing@nfpa.org.

mains or risers shall be of the size required for the total number of sprinklers.

23.5.1.6 Stair Towers. Stair towers, or other construction with incomplete floors, if piped on independent risers, shall be treated as one area with reference to pipe sizes.

23.5.2 Schedule for Light Hazard Occupancies.

23.5.2.1 Branch Lines.

23.5.2.1.1 Unless permitted by 23.5.2.1.2 or 23.5.2.1.3, branch lines shall not exceed eight sprinklers on either side of a cross main.

23.5.2.1.2 Where more than eight sprinklers on a branch line are necessary, lines shall be permitted to be increased to nine sprinklers by making the two end lengths 1 in. (25.4 mm) and 1¼ in. (33 mm), respectively, and the sizes thereafter standard.

23.5.2.1.3 Ten sprinklers shall be permitted to be placed on a branch line, making the two end lengths 1 in. (25.4 mm) and 1¼ in. (33 mm), respectively, and feeding the tenth sprinkler by a 2½ in. (64 mm) pipe.

23.5.2.2 Pipe Sizes.

23.5.2.2.1 Pipe sizes shall be in accordance with Table 23.5.2.2.1.

Table 23.5.2.2.1 Light Hazard Pipe Schedules

Steel		Copper	
1 in.	2 sprinklers	1 in.	2 sprinklers
1¼ in.	3 sprinklers	1¼ in.	3 sprinklers
1½ in.	5 sprinklers	1½ in.	5 sprinklers
2 in.	10 sprinklers	2 in.	12 sprinklers
2½ in.	30 sprinklers	2½ in.	40 sprinklers
3 in.	60 sprinklers	3 in.	65 sprinklers
3½ in.	100 sprinklers	3½ in.	115 sprinklers
4 in.	See Section 8.2	4 in.	See Section 8.2

For SI units, 1 in. = 25.4 mm.

23.5.2.2.2 Each area requiring more sprinklers than the number specified for 3½ in. (89 mm) pipe in Table 23.5.2.2.1 and without subdividing partitions (not necessarily fire walls) shall be supplied by mains or risers sized for ordinary hazard occupancies.

23.5.2.3 Where sprinklers are installed above and below ceilings in accordance with Figure 23.5.2.3(a) through Figure 23.5.2.3(c), and such sprinklers are supplied from a common set of branch lines or separate branch lines from a common cross main, such branch lines shall not exceed eight sprinklers above and eight sprinklers below any ceiling on either side of the cross main.

23.5.2.4 Unless the requirements of 23.5.2.5 are met, pipe sizing up to and including 2½ in. (64 mm) shall be as shown in Table 23.5.2.4 utilizing the greatest number of sprinklers to be found on any two adjacent levels.

23.5.2.5 Branch lines and cross mains supplying sprinklers installed entirely above or entirely below ceilings shall be sized in accordance with Table 23.5.2.2.1.

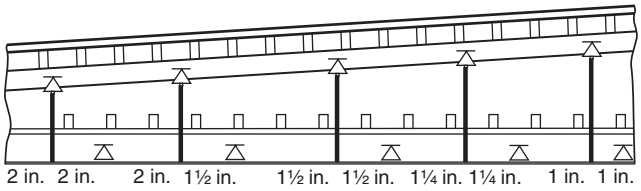

For SI units, 1 in. = 25.4 mm.

FIGURE 23.5.2.3(a) Arrangement of Branch Lines Supplying Sprinklers Above and Below Ceiling.

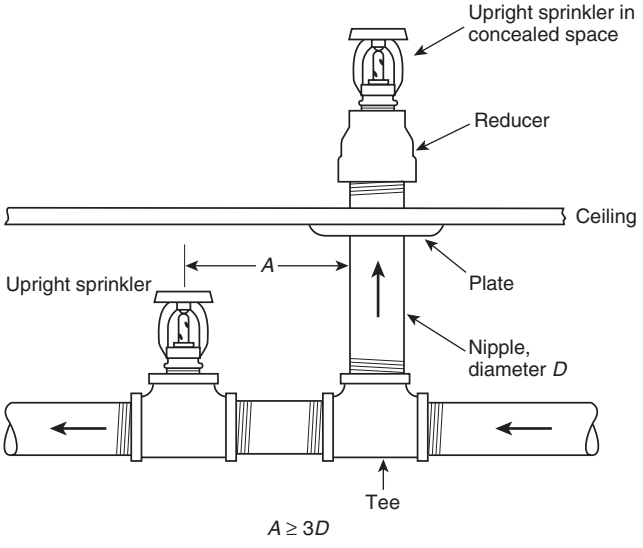

FIGURE 23.5.2.3(b) Sprinkler on Riser Nipple from Branch Line in Lower Fire Area.

23.5.2.6* Where the total number of sprinklers above and below a ceiling exceeds the number specified in Table 23.5.2.2.1 for 2½ in. (64 mm) pipe, the pipe supplying such sprinklers shall be increased to 3 in. (76 mm) and sized thereafter according to the schedule shown in Table 23.5.2.2.1 for the number of sprinklers above or below a ceiling, whichever is larger.

23.5.3 Schedule for Ordinary Hazard Occupancies.

23.5.3.1 Unless permitted by 23.5.3.2 or 23.5.3.3, branch lines shall not exceed eight sprinklers on either side of a cross main.

23.5.3.2 Where more than eight sprinklers on a branch line are necessary, lines shall be permitted to be increased to nine sprinklers by making the two end lengths 1 in. (25.4 mm) and 1¼ in. (33 mm), respectively, and the sizes thereafter standard.

23.5.3.3 Ten sprinklers shall be permitted to be placed on a branch line, making the two end lengths 1 in. (25.4 mm) and 1¼ in. (33 mm), respectively, and feeding the tenth sprinkler by a 2½ in. (64 mm) pipe.

23.5.3.4 Pipe sizes shall be in accordance with Table 23.5.3.4.

23.5.3.5 Where the distance between sprinklers on the branch line exceeds 12 ft (3.7 m) or the distance between the branch lines exceeds 12 ft (3.7 m), the number of sprinklers for a given pipe size shall be in accordance with Table 23.5.3.5.

Copyright 2014 National Fire Protection Association (NFPA). Licensed, by agreement, for individual use and download on October 4, 2014 to LEADER and READER for designated user PATTARAPORN SRITRAKOOL. No other reproduction or transmission in any form permitted without written permission of NFPA. For inquires or to report unauthorized use, contact licensing@nfpa.org.

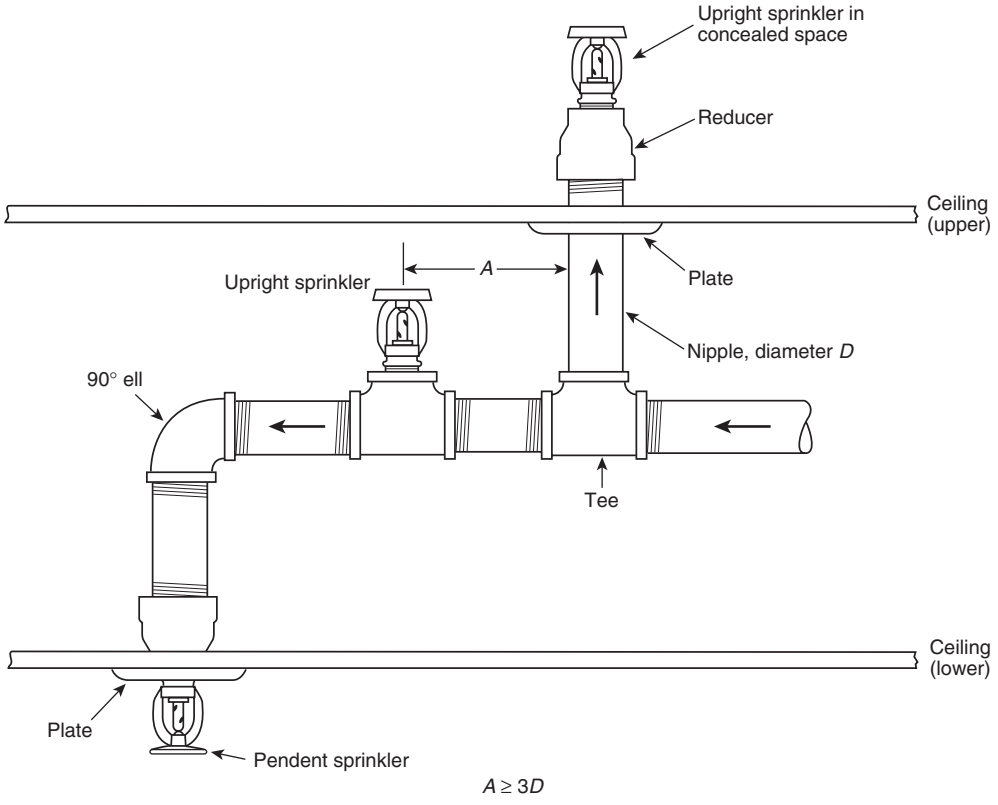

FIGURE 23.5.2.3(c) Arrangement of Branch Lines Supplying Sprinklers Above, Between, and Below Ceilings.

Table 23.5.2.4 Number of Sprinklers Above and Below Ceiling

Steel		Copper	
1 in.	2 sprinklers	1 in.	2 sprinklers
1¼ in.	4 sprinklers	1¼ in.	4 sprinklers
1½ in.	7 sprinklers	1½ in.	7 sprinklers
2 in.	15 sprinklers	2 in.	18 sprinklers
2½ in.	50 sprinklers	2½ in.	65 sprinklers

For SI units, 1 in. = 25.4 mm.

23.5.3.6 Where sprinklers are installed above and below ceilings and such sprinklers are supplied from a common set of branch lines or separate branch lines supplied by a common cross main, such branch lines shall not exceed eight sprinklers above and eight sprinklers below any ceiling on either side of the cross main.

23.5.3.7 Pipe sizing up to and including 3 in. (76 mm) shall be as shown in Table 23.5.3.7 in accordance with Figure 23.5.2.3(a), Figure 23.5.2.3(b), and Figure 23.5.2.3(c) utilizing the greatest number of sprinklers to be found on any two adjacent levels.

23.5.3.8 Branch lines and cross mains supplying sprinklers installed entirely above or entirely below ceilings shall be sized in accordance with Table 23.5.3.4 or Table 23.5.3.5.

Table 23.5.3.4 Ordinary Hazard Pipe Schedule

Steel		Copper	
1 in.	2 sprinklers	1 in.	2 sprinklers
1¼ in.	3 sprinklers	1¼ in.	3 sprinklers
1½ in.	5 sprinklers	1½ in.	5 sprinklers
2 in.	10 sprinklers	2 in.	12 sprinklers
2½ in.	20 sprinklers	2½ in.	25 sprinklers
3 in.	40 sprinklers	3 in.	45 sprinklers
3½ in.	65 sprinklers	3½ in.	75 sprinklers
4 in.	100 sprinklers	4 in.	115 sprinklers
5 in.	160 sprinklers	5 in.	180 sprinklers
6 in.	275 sprinklers	6 in.	300 sprinklers
8 in.	See Section 8.2	8 in.	See Section 8.2

For SI units, 1 in. = 25.4 mm.

Table 23.5.3.5 Number of Sprinklers — Greater Than 12 ft (3.7 m) Separations

Steel		Copper	
2½ in.	15 sprinklers	2½ in	20 sprinklers
3 in.	30 sprinklers	3 in.	35 sprinklers
3½ in.	60 sprinklers	3½ in.	65 sprinklers

For SI units, 1 in. = 25.4 mm.
Note: For other pipe and tube sizes, see Table 22.5.3.4.

Copyright 2014 National Fire Protection Association (NFPA). Licensed, by agreement, for individual use and download on October 4, 2014 to LEADER and READER for designated user PATTARAPORN SRITRAKOOL. No other reproduction or transmission in any form permitted without written permission of NFPA. For inquires or to report unauthorized use, contact licensing@nfpa.org.

Table 23.5.3.7 Number of Sprinklers Above and Below a Ceiling

Steel		Copper	
1 in.	2 sprinklers	1 in.	2 sprinklers
1¼ in.	4 sprinklers	1¼ in.	4 sprinklers
1½ in.	7 sprinklers	1½ in.	7 sprinklers
2 in.	15 sprinklers	2 in.	18 sprinklers
2½ in.	30 sprinklers	2½ in.	40 sprinklers
3 in.	60 sprinklers	3 in.	65 sprinklers

For SI units, 1 in. = 25.4 mm.

23.5.3.9* Where the total number of sprinklers above and below a ceiling exceeds the number specified in Table 23.5.3.7 for 3 in. (76 mm) pipe, the pipe supplying such sprinklers shall be increased to 3½ in. (89 mm) and sized thereafter according to the schedule shown in Table 23.5.2.2.1 or Table 23.5.3.4 for the number of sprinklers above or below a ceiling, whichever is larger.

23.5.3.10 Where the distance between the sprinklers protecting the occupied area exceeds 12 ft (3.7 m) or the distance between the branch lines exceeds 12 ft (3.7 m), the branch lines shall be sized in accordance with either Table 23.5.3.5, taking into consideration the sprinklers protecting the occupied area only, or Table 23.5.3.7, whichever requires the greater size of pipe.

23.5.4* Extra Hazard Occupancies. Extra hazard occupancies shall be hydraulically calculated.

23.6 Deluge Systems. Open sprinkler and deluge systems shall be hydraulically calculated according to applicable standards.

23.7* Exposure Protection Sprinkler Systems.

23.7.1 Exposure protection sprinkler systems shall be hydraulically calculated using Table 23.7.1 based on severity of exposure as indicated by a relative classification of guide number or other approved source.

23.7.2 In no case shall compliance with Table 23.7.1 result in a sprinkler discharge pressure below 7 psi (0.49 bar).

23.7.3 Only half of the flow from upright, pendent, and other nondirectional sprinklers shall be used in determining the minimum average application rate over the protected surface.

23.7.4 The water supply shall be capable of simultaneously supplying the total demand of sprinklers along an exposure to a maximum length of 300 ft (91.4 m). Where systems of open sprinklers are used, the water supply shall be capable of simultaneously flowing all sprinklers that would flow as part of all systems that could be actuated within any 300 ft (91.4 m) length.

23.7.5 The water supply duration for an exposure protection sprinkler system shall be a minimum of 60 minutes.

23.7.6 A level of window sprinklers as described in Table 23.7.1 shall be defined as a floor level of the building being protected.

23.7.7 Window sprinklers shall be permitted to cover more than 25 ft^2 (2.3 m^2) of window area per level.

23.7.7.1 The starting pressure shall be calculated based on the application rate over 25 ft^2 (2.3 m^2) of window area as indicated in Table 23.7.1.

Table 23.7.1 Exposure Protection

Section A — Wall and Window Sprinklers

Exposure Severity	Guide Number	Level of Wall or Window Sprinklers	Minimum Nominal K-Factor	Discharge Coefficient (K-Factor)	Minimum Average Application Rate Over Protected Surface	
					gpm/ft^2	mm/min
Light	1.50 or less	Top 2 levels	2.8 (40)	2.8 (40)	0.20	8.1
		Next lower 2 levels	1.9 (27)	1.9 (27)	0.15	6.1
		Next lower 2 levels	1.4 (20)	1.4 (20)	0.10	4.1
Moderate	1.5–2.20	Top 2 levels	5.6 (80)	5.6 (80)	0.30	12.2
		Next lower 2 levels	4.2 (60)	4.2 (60)	0.25	10.2
		Next lower 2 levels	2.8 (40)	2.8 (40)	0.20	8.1
Severe	>2.20	Top 2 levels	11.2 (161)	11.2 (161)	0.40	16.3
		Next lower 2 levels	8.0 (115)	8.0 (115)	0.35	14.3
		Next lower 2 levels	5.6 (80)	5.6 (80)	0.30	12.2

Section B — Cornice Sprinklers

Guide Number	Cornice Sprinkler Minimal Nominal K-Factor	Application Rate per Lineal Foot (gpm)	Application Rate per Lineal Meter (L/min)
1.50 or less	2.8 (40)	0.75	9.3
>1.51–2.20	5.6 (80)	1.50	18.6
>2.20	11.2 (161)	3.00	37.2

For SI units, 1 in. = 25.4 mm; 1 gpm = 3.785 L/min; 1 gpm/ft^2 = 40.746 mm/min.

Copyright 2014 National Fire Protection Association (NFPA). Licensed, by agreement, for individual use and download on October 4, 2014 to LEADER and READER for designated user PATTARAPORN SRITRAKOOL. No other reproduction or transmission in any form permitted without written permission of NFPA. For inquires or to report unauthorized use, contact licensing@nfpa.org.

23.7.7.2 The maximum spacing between window sprinklers shall not exceed 8 ft (2.44 m) unless listed for a greater distance.

23.8 In-Rack Sprinklers.

23.8.1 Pipes to in-rack sprinklers shall be sized by hydraulic calculations.

23.8.2 Water demand of sprinklers installed in racks shall be added to ceiling sprinkler water demand over the same protected area at the point of connection.

23.8.3 The demand shall be balanced to the higher pressure.

23.8.4 Water demand of sprinklers installed in racks or water curtains shall be added to the ceiling sprinkler water demand at the point of connection. Demands shall be balanced to the higher pressure. *(See Chapter 8.)*

23.9 Hose Allowance. Water allowance for outside hose shall be added to the sprinkler and inside hose requirement at the connection to the city water main or a yard hydrant, whichever is closer to the system riser.

Chapter 24 Water Supplies

24.1 General.

24.1.1 Number of Supplies. Every automatic sprinkler system shall have at least one automatic water supply.

24.1.2 Capacity. Water supplies shall be capable of providing the required flow and pressure for the remote design area determined using the requirements and procedures as specified in Chapters 11 through 22 including hose stream allowance where applicable for the required duration.

24.1.3 Size of Fire Mains.

24.1.3.1 Except as provided in 24.1.3.2, no pipe smaller than 6 in. (150 mm) in diameter shall be installed as a private service main.

24.1.3.2 For mains that do not supply hydrants, sizes smaller than 6 in. (150 mm) shall be permitted to be used subject to the following restrictions:

(1) The main supplies only automatic sprinkler systems, open sprinkler systems, water spray fixed systems, foam systems, or Class II standpipe systems.
(2) Hydraulic calculations show that the main will supply the total demand at the appropriate pressure. Systems that are not hydraulically calculated shall have a main at least as large as the system riser.

24.1.3.3* When a single main less than 4 in. (100 mm) in diameter serves both domestic and fire systems, the domestic demand shall be added to the hydraulic calculations for the fire system at the point of connection unless provisions have been made to isolate the domestic demand.

24.1.4 Underground Supply Pipe. For pipe schedule systems, the underground supply pipe shall be at least as large as the system riser.

24.1.5* Water Supply Treatment.

24.1.5.1 Water supplies and environmental conditions shall be evaluated for the existence of microbes and conditions that contribute to microbiologically influenced corrosion (MIC). Where conditions are found that contribute to MIC, the owner(s) shall notify the sprinkler system installer and a plan shall be developed to treat the system using one of the following methods:

(1) Install a water pipe that will not be affected by the MIC microbes
(2) Treat all water that enters the system using an approved biocide
(3) Implement an approved plan for monitoring the interior conditions of the pipe at established time intervals and locations
(4) Install corrosion monitoring station and monitor at established intervals

24.1.5.2 Water supplies and environmental conditions shall be evaluated for conditions that contribute to unusual corrosive properties. Where conditions are found that contribute to unusual corrosive properties, the owner(s) shall notify the sprinkler system installer and a plan shall be developed to treat the system using one of the following methods:

(1) Install a water pipe that is corrosion resistant
(2) Treat all water that enters the system using an approved corrosion inhibitor
(3) Implement an approved plan for monitoring the interior conditions of the pipe at established intervals and locations
(4) Install corrosion monitoring station and monitor at established intervals

24.1.5.3 Where listed biocides and/or corrosion inhibitors are used, they shall be compatible with system components. Where used together, they shall also be compatible with each other.

24.1.6 Arrangement.

24.1.6.1 Connection Between Underground and Aboveground Piping.

24.1.6.1.1 The connection between the system piping and underground piping shall be made with a suitable transition piece and shall be properly strapped or fastened by approved devices.

24.1.6.1.2 The transition piece shall be protected against possible damage from corrosive agents, solvent attack, or mechanical damage.

24.1.6.2* Connection Passing Through or Under Foundation Walls. When system piping pierces a foundation wall below grade or is located under the foundation wall, clearance shall be provided to prevent breakage of the piping due to building settlement.

24.1.7* Meters. Where meters are required by other authorities, they shall be listed.

24.1.8* Connection from Waterworks System.

24.1.8.1 The requirements of the public health authority having jurisdiction shall be determined and followed.

24.1.8.2 Where equipment is installed to guard against possible contamination of the public water system, such equipment and devices shall be listed for fire protection service.

24.2 Types.

24.2.1* Water supplies for sprinkler systems shall be one of the following or any combination:

Copyright 2014 National Fire Protection Association (NFPA). Licensed, by agreement, for individual use and download on October 4, 2014 to LEADER and READER for designated user PATTARAPORN SRITRAKOOL. No other reproduction or transmission in any form permitted without written permission of NFPA. For inquires or to report unauthorized use, contact licensing@nfpa.org.

(1) A connection to an approved public or private waterworks system in accordance with 24.2.2
(2) A connection including a fire pump in accordance with 24.2.3
(3) A connection to a water storage tank at grade or below grade installed in accordance with NFPA 22 and filled from an approved source
(4) A connection to a pressure tank in accordance with 24.2.4 and filled from an approved source
(5) A connection to a gravity tank in accordance with 24.2.5 and filled from an approved source
(6) A penstock, flume, river, lake, pond, or reservoir in accordance with 24.2.6
(7)*A source of recycled or reclaimed water where the building owner (or their agent) has analyzed the source of the water and the treatment process (if any) that the water undergoes before being made available to the sprinkler system and determined that any materials, chemicals, or contaminants in the water will not be detrimental to the components of the sprinkler system it comes in contact with

24.2.2* Connections to Waterworks Systems.

24.2.2.1 A connection to a reliable waterworks system shall be an acceptable water supply source.

24.2.2.2* The volume and pressure of a public water supply shall be determined from waterflow test data or other approved method.

24.2.3* Pumps. A single automatically controlled fire pump installed in accordance with NFPA 20 shall be an acceptable water supply source.

24.2.4 Pressure Tanks.

24.2.4.1 Acceptability.

24.2.4.1.1 A pressure tank installed in accordance with NFPA 22 shall be an acceptable water supply source.

24.2.4.1.2 Pressure tanks shall be provided with an approved means for automatically maintaining the required air pressure.

24.2.4.1.3 Where a pressure tank is the sole water supply, an approved trouble alarm shall also be provided to indicate low air pressure and low water level with the alarm supplied from an electrical branch circuit independent of the air compressor.

24.2.4.1.4 Pressure tanks shall not be used to supply other than sprinklers and hand hose attached to sprinkler piping.

24.2.4.2 Capacity.

24.2.4.2.1 In addition to the requirements of 24.1.2, the water capacity of a pressure tank shall include the extra capacity needed to fill dry pipe or preaction systems where installed.

24.2.4.2.2 The total volume shall be based on the water capacity plus the air capacity required by 24.2.4.3.

24.2.4.3* Water Level and Air Pressure.

24.2.4.3.1 Pressure tanks shall be kept with a sufficient supply of water to meet the demand of the fire protection system as calculated in Chapter 23 for the duration required by Chapter 11, Chapter 12, or Chapter 22.

24.2.4.3.2 The pressure shall be sufficient to push all of the water out of the tank while maintaining the necessary residual pressure (required by Chapter 23) at the top of the system.

24.2.5 Gravity Tanks. An elevated tank installed in accordance with NFPA 22 shall be an acceptable water supply source.

24.2.6 Penstocks, Flumes, Rivers, or Lakes. Water supply connections from penstocks, flumes, rivers, lakes, or reservoirs shall be arranged to avoid mud and sediment and shall be provided with approved double removable screens or approved strainers installed in an approved manner.

Chapter 25 Systems Acceptance

25.1 Approval of Sprinkler Systems and Private Fire Service Mains. The installing contractor shall do the following:

(1) Notify the authority having jurisdiction and the property owner or the property owner's authorized representative of the time and date testing will be performed
(2) Perform all required acceptance tests *(see Section 25.2)*
(3) Complete and sign the appropriate contractor's material and test certificate(s) *(see Figure 25.1)*
(4) Remove all caps and straps prior to placing the sprinkler system in service

25.2 Acceptance Requirements.

25.2.1* Hydrostatic Tests.

25.2.1.1 Unless permitted by 25.2.1.2 through 25.2.1.8, all piping and attached appurtenances subjected to system working pressure shall be hydrostatically tested at 200 psi (13.8 bar) and shall maintain that pressure without loss for 2 hours.

25.2.1.2 Portions of systems normally subjected to system working pressures in excess of 150 psi (10.4 bar) shall be tested as described in 25.2.1.1, at a pressure of 50 psi (3.5 bar) in excess of system working pressure.

25.2.1.3 Where cold weather will not permit testing with water, an interim air test shall be permitted to be conducted as described in 25.2.2. This provision shall not remove or replace the requirement for conducting the hydrostatic test as described in 25.2.1.1.

25.2.1.4 Modifications affecting 20 or fewer sprinklers shall not require testing in excess of system working pressure.

25.2.1.5 Where addition or modification is made to an existing system affecting more than 20 sprinklers, the new portion shall be isolated and tested at not less than 200 psi (13.8 bar) for 2 hours.

25.2.1.6 Modifications that cannot be isolated, such as relocated drops, shall not require testing in excess of system working pressure.

25.2.1.7 Loss shall be determined by a drop in gauge pressure or visual leakage.

25.2.1.8* The test pressure shall be read from a gauge located at the low elevation point of the system or portion being tested. The pressures in piping at higher elevations shall be permitted to be less than 200 psi (13.8 bar) when accounting for elevation losses. Systems or portions of systems that can be isolated shall be permitted to be tested separately.

25.2.1.9* Additives, corrosive chemicals such as sodium silicate, or derivatives of sodium silicate, brine, or similar acting chemicals shall not be used while hydrostatically testing systems or for stopping leaks.

Copyright 2014 National Fire Protection Association (NFPA). Licensed, by agreement, for individual use and download on October 4, 2014 to LEADER and READER for designated user PATTARAPORN SRITRAKOOL. No other reproduction or transmission in any form permitted without written permission of NFPA. For inquires or to report unauthorized use, contact licensing@nfpa.org.

Contractor's Material and Test Certificate for Aboveground Piping

PROCEDURE

Upon completion of work, inspection and tests shall be made by the contractor's representative and witnessed by the property owner or their authorized agent. All defects shall be corrected and system left in service before contractor's personnel finally leave the job.

A certificate shall be filled out and signed by both representatives. Copies shall be prepared for approving authorities, owners, and contractor. It is understood the owner's representative's signature in no way prejudices any claim against contractor for faulty material, poor workmanship, or failure to comply with approving authority's requirements or local ordinances.

Property name	Date
Property address	

Plans	Accepted by approving authorities (names)		
	Address		
	Installation conforms to accepted plans	❑ Yes	❑ No
	Equipment used is approved	❑ Yes	❑ No
	If no, explain deviations		
Instructions	Has person in charge of fire equipment been instructed as to location of control valves and care and maintenance of this new equipment? If no, explain	❑ Yes	❑ No
	Have copies of the following been left on the premises?	❑ Yes	❑ No
	1. System components instructions	❑ Yes	❑ No
	2. Care and maintenance instructions	❑ Yes	❑ No
	3. NFPA 25	❑ Yes	❑ No
Location of system	Supplies buildings		

Sprinklers

Make	Model	Year of manufacture	Orifice size	Quantity	Temperature rating

Pipe and fittings

Type of pipe _____

Type of fittings _____

Alarm valve or flow indicator

Alarm device			Maximum time to operate through test connection	
Type	Make	Model	Minutes	Seconds

Dry pipe operating test

Dry valve			Q. O. D.		
Make	Model	Serial no.	Make	Model	Serial no.

	Time to trip through test connection[a,b]		Water pressure	Air pressure	Trip point air pressure	Time water reached test outlet[a,b]		Alarm operated properly	
	Minutes	Seconds	psi	psi	psi	Minutes	Seconds	Yes	No
Without Q.O.D.									
With Q.O.D.									

If no, explain

© 2012 National Fire Protection Association NFPA 13 (p. 1 of 3)

[a] Measured from time inspector's test connection is opened.
[b] NFPA 13 only requires the 60-second limitation in specific sections.

FIGURE 25.1 Contractor's Material and Test Certificate for Aboveground Piping.

Copyright 2014 National Fire Protection Association (NFPA). Licensed, by agreement, for individual use and download on October 4, 2014 to LEADER and READER for designated user PATTARAPORN SRITRAKOOL. No other reproduction or transmission in any form permitted without written permission of NFPA. For inquires or to report unauthorized use, contact licensing@nfpa.org.

Deluge and preaction valves

Operation ❑ Pneumatic ❑ Electric ❑ Hydraulics

Piping supervised ❑ Yes ❑ No | Detecting media supervised ❑ Yes ❑ No

Does valve operate from the manual trip, remote, or both control stations? ❑ Yes ❑ No

Is there an accessible facility in each circuit for testing? ❑ Yes ❑ No | If no, explain

Make	Model	Does each circuit operate supervision loss alarm?		Does each circuit operate valve release?		Maximum time to operate release	
		Yes	No	Yes	No	Minutes	Seconds

Pressure-reducing valve test

Location and floor	Make and model	Setting	Static pressure		Residual pressure (flowing)		Flow rate
			Inlet (psi)	Outlet (psi)	Inlet (psi)	Outlet (psi)	Flow (gpm)

Backflow device forward flow test

Indicate means used for forward flow test of backflow device: _____

When means to test device was opened, was system flow demand created? ❑ Yes ❑ No ❑ N/A

Test description

Hydrostatic: Hydrostatic tests shall be made at not less than 200 psi (13.6 bar) for 2 hours or 50 psi (3.4 bar) above static pressure in excess of 150 psi (10.2 bar) for 2 hours. Differential dry pipe valve clappers shall be left open during the test to prevent damage. All aboveground piping leakage shall be stopped.

Pneumatic: Establish 40 psi (2.7 bar) air pressure and measure drop, which shall not exceed 1½ psi (0.1 bar) in 24 hours. Test pressure tanks at normal water level and air pressure and measure air pressure drop, which shall not exceed 1½ psi (0.1 bar) in 24 hours.

Tests

All piping hydrostatically tested at ____ psi (____ bar) for ____ hours ❑ Yes ❑ No | If no, state reason

Dry piping pneumatically tested ❑ Yes ❑ No

Equipment operates properly ❑ Yes ❑ No

Do you certify as the sprinkler contractor that additives and corrosive chemicals, sodium silicate or derivatives of sodium silicate, brine, or other corrosive chemicals were not used for testing systems or stopping leaks? ❑ Yes ❑ No

Drain test	Reading of gauge located near water supply test connection: ____ psi (____ bar)	Residual pressure with valve in test connection open wide: ____ psi (____ bar)

Underground mains and lead-in connections to system risers flushed before connection made to sprinkler piping

Verified by copy of the Contractor's Material and Test Certificate for Underground Piping. ❑ Yes ❑ No | Other Explain

Flushed by installer of underground sprinkler piping ❑ Yes ❑ No

If powder-driven fasteners are used in concrete, has representative sample testing been satisfactorily completed? ❑ Yes ❑ No | If no, explain

Blank testing gaskets

Number used	Locations	Number removed

Welding

Welding piping ❑ Yes ❑ No

If yes . . .

Do you certify as the sprinkler contractor that welding procedures used complied with the minimum requirements of AWS B2.1, ASME Section IX *Welding and Brazing Qualifications,* or other applicable qualification standard as required by the AHJ? ❑ Yes ❑ No

Do you certify that all welding was performed by welders or welding operators qualified in accordance with the minimum requirements of AWS B2.1, ASME Section IX *Welding and Brazing Qualifications,* or other applicable qualification standard as required by the AHJ? ❑ Yes ❑ No

Do you certify that the welding was conducted in compliance with a documented quality control procedure to ensure that (1) all discs are retrieved; (2) that openings in piping are smooth, that slag and other welding residue are removed; (3) the internal diameters of piping are not penetrated; (4) completed welds are free from cracks, incomplete fusion, surface porosity greater than 1/16 in. diameter, undercut deeper than the lesser of 25% of the wall thickness or 1/32 in.; and (5) completed circumferential butt weld reinforcement does not exceed 3/32 in.? ❑ Yes ❑ No

© 2012 National Fire Protection Association NFPA 13 (p. 2 of 3)

FIGURE 25.1 ***Continued***

Copyright 2014 National Fire Protection Association (NFPA). Licensed, by agreement, for individual use and download on October 4, 2014 to LEADER and READER for designated user PATTARAPORN SRITRAKOOL. No other reproduction or transmission in any form permitted without written permission of NFPA. For inquires or to report unauthorized use, contact licensing@nfpa.org.

Cutouts (discs)	Do you certify that you have a control feature to ensure that all cutouts (discs) are retrieved? ❑ Yes ❑ No	
Hydraulic data nameplate	Nameplate provided ❑ Yes ❑ No	If no, explain
Sprinkler contractor removed all caps and straps? ❑ Yes ❑ No		
Remarks	Date left in service with all control valves open	
Signatures	Name of sprinkler contractor	
	Tests witnessed by	
	The property owner or their authorized agent (signed) Title Date	
	For sprinkler contractor (signed) Title Date	
Additional explanations and notes		

© 2012 National Fire Protection Association NFPA 13 (p. 3 of 3)

FIGURE 25.1 *Continued*

Copyright 2014 National Fire Protection Association (NFPA). Licensed, by agreement, for individual use and download on October 4, 2014 to LEADER and READER for designated user PATTARAPORN SRITRAKOOL. No other reproduction or transmission in any form permitted without written permission of NFPA. For inquires or to report unauthorized use, contact licensing@nfpa.org.

25.2.1.10 Piping between the exterior fire department connection and the check valve in the fire department inlet pipe shall be hydrostatically tested in the same manner as the balance of the system. After repair or replacement work affecting the fire department connection, the piping between the exterior and the check valve in the fire department inlet pipe shall be isolated and hydrostatically tested at 150 psi (10.3 bar).

25.2.1.11 When systems are being hydrostatically tested, tests shall be permitted to be conducted with pendent or horizontal sidewall sprinklers or plugs installed in fittings. Any plugs shall be replaced with pendent or horizontal sidewall sprinklers after the test is completed.

25.2.1.12 When deluge systems are being hydrostatically tested, plugs shall be installed in fittings and replaced with open sprinklers after the test is completed, or the operating elements of automatic sprinklers shall be removed after the test is completed.

25.2.1.13 Provision shall be made for the proper disposal of water used for flushing or testing.

25.2.1.14* Test Blanks.

25.2.1.14.1 Test blanks shall have painted lugs protruding in such a way as to clearly indicate their presence.

25.2.1.14.2 The test blanks shall be numbered, and the installing contractor shall have a recordkeeping method ensuring their removal after work is completed.

25.2.1.15 When subject to hydrostatic test pressures, the clapper of a differential-type valve shall be held off its seat to prevent damaging the valve.

25.2.2 Dry Pipe and Double Interlock Preaction System(s) Air Test.

25.2.2.1 In addition to the standard hydrostatic test, an air pressure leakage test at 40 psi (2.8 bar) shall be conducted for 24 hours. Any leakage that results in a loss of pressure in excess of 1½ psi (0.1 bar) for the 24 hours shall be corrected.

25.2.2.2 Where systems are installed in spaces that are capable of being operated at temperatures below 32°F (0°C), air or nitrogen gas pressure leakage tests required in 25.2.2 shall be conducted at the lowest nominal temperature of the space.

25.2.3 System Operational Tests.

25.2.3.1 Waterflow Devices. Waterflow detecting devices including the associated alarm circuits shall be flow tested through the inspector's test connection and shall result in an audible alarm on the premises within 5 minutes after such flow begins and until such flow stops.

25.2.3.2* Dry Pipe Systems.

25.2.3.2.1 A working test of the dry pipe valve alone and with a quick-opening device, if installed, shall be made by opening the inspector's test connection.

25.2.3.2.2* The test shall measure the time to trip the valve and the time for water to be discharged from the inspector's test connection. All times shall be measured from the time the inspector's test connection is completely opened.

25.2.3.2.2.1* Dry systems calculated for water delivery in accordance with 7.2.3.6 shall be exempt from any specific delivery time requirement.

25.2.3.2.3 The results shall be recorded using the contractor's material and test certificate for aboveground piping *(see Figure 25.1)*.

25.2.3.3 Deluge and Preaction Systems.

25.2.3.3.1 The automatic operation of a deluge or preaction valve shall be tested in accordance with the manufacturer's instructions.

25.2.3.3.2 The manual and remote control operation, where present, shall also be tested.

25.2.3.4 Main Drain Valves.

25.2.3.4.1 The main drain valve shall be opened and remain open until the system pressure stabilizes.

25.2.3.4.2* The static and residual pressures shall be recorded on the contractor's material and test certificate *(see Figure 25.1)*.

25.2.3.5 Operating Test for Control Valves. All control valves shall be fully closed and opened under system water pressure to ensure proper operation.

25.2.4 Pressure-Reducing Valves.

25.2.4.1 Each pressure-reducing valve shall be tested upon completion of installation to ensure proper operation under flow and no-flow conditions.

25.2.4.2 Testing shall verify that the device properly regulates outlet pressure at both maximum and normal inlet pressure conditions.

25.2.4.3 The results of the flow test of each pressure-reducing valve shall be recorded on the contractor's material and test certificate *(see Figure 25.1)*.

25.2.4.4 The results shall include the static and residual inlet pressures, static and residual outlet pressures, and the flow rate.

25.2.5 Backflow Prevention Assemblies.

25.2.5.1 The backflow prevention assembly shall be forward flow tested to ensure proper operation.

25.2.5.2 The minimum flow rate shall be the system demand, including hose stream allowance where applicable.

25.2.6 Exposure Systems. Operating tests shall be made of exposure protection systems upon completion of the installation, where such tests do not risk water damage to the building on which they are installed or to adjacent buildings.

25.3 Circulating Closed Loop Systems.

25.3.1 For sprinkler systems with non–fire protection connections, additional information shall be appended to the contractor's material and test certificate for aboveground piping shown in Figure 25.1 as follows:

(1) Certification that all auxiliary devices, such as heat pumps, circulating pumps, heat exchangers, radiators, and luminaires, if a part of the system, have a pressure rating of at least 175 psi or 300 psi (12.1 bar or 20.7 bar) if exposed to pressures greater than 175 psi (12.1 bar).
(2) All components of sprinkler system and auxiliary system have been pressure tested as a composite system in accordance with 25.2.2.

Copyright 2014 National Fire Protection Association (NFPA). Licensed, by agreement, for individual use and download on October 4, 2014 to LEADER and READER for designated user PATTARAPORN SRITRAKOOL. No other reproduction or transmission in any form permitted without written permission of NFPA. For inquires or to report unauthorized use, contact licensing@nfpa.org.

(3) Waterflow tests have been conducted and waterflow alarms have operated while auxiliary equipment is in each of the possible modes of operation.
(4) With auxiliary equipment tested in each possible mode of operation and with no flow from sprinklers or test connection, waterflow alarm signals did not operate.
(5) Excess temperature controls for shutting down the auxiliary system have been properly field tested.

25.3.2 Discharge tests of sprinkler systems with non–fire protection connections shall be conducted using system test connections described in 6.9.1.

25.3.3 Pressure gauges shall be installed at critical points and readings shall be taken under various modes of auxiliary equipment operation.

25.3.4 Waterflow alarm signals shall be responsive to discharge of water through system test pipes while auxiliary equipment is in each of the possible modes of operation.

25.4 Instructions. The installing contractor shall provide the property owner or the property owner's authorized representative with the following:

(1) All literature and instructions provided by the manufacturer describing proper operation and maintenance of any equipment and devices installed
(2) NFPA 25

25.5* Hydraulic Design Information Sign.

25.5.1 The installing contractor shall identify a hydraulically designed sprinkler system with a permanently marked weatherproof metal or rigid plastic sign secured with corrosion-resistant wire, chain, or other approved means. Such signs shall be placed at the alarm valve, dry pipe valve, preaction valve, or deluge valve supplying the corresponding hydraulically designed area.

25.5.2 The sign shall include the following information:

(1) Location of the design area or areas
(2) Discharge densities over the design area or areas
(3) Required flow and residual pressure demand at the base of the riser
(4) Occupancy classification or commodity classification and maximum permitted storage height and configuration
(5) Hose stream allowance included in addition to the sprinkler demand
(6) The name of the installing contractor

25.6* General Information Sign.

25.6.1 The installing contractor shall provide a general information sign used to determine system design basis and information relevant to the inspection, testing, and maintenance requirements required by NFPA 25.

25.6.1.1 Such general information shall be provided with a permanently marked weatherproof metal or rigid plastic sign, secured with corrosion-resistant wire, chain, or other acceptable means.

25.6.1.2 Such signs shall be placed at each system control riser, antifreeze loop, and auxiliary system control valve.

25.6.2 The sign shall include the following information:

(1) Name and location of the facility protected
(2) Occupancy classification
(3) Commodity classification
(4) Presence of high-piled and/or rack storage
(5) Maximum height of storage planned
(6) Aisle width planned
(7) Encapsulation of pallet loads
(8) Presence of solid shelving
(9) Flow test data
(10) Presence of flammable/combustible liquids
(11) Presence of hazardous materials
(12) Presence of other special storage
(13) Location of auxiliary drains and low point drains on dry pipe and preaction systems
(14) Original results of main drain flow test
(15) Name of installing contractor or designer
(16) Indication of presence and location of antifreeze or other auxiliary systems
(17) Where injection systems are installed to treat MIC or corrosion, the type of chemical, concentration of the chemical, and where information can be found as to the proper disposal of the chemical

Chapter 26 Marine Systems

26.1 General.

26.1.1 Chapter 26 outlines the deletions, modifications, and additions that shall be required for marine application. The applicability of Chapter 26 shall be determined by the authority having jurisdiction.

26.1.2 All other requirements of this standard shall apply to merchant vessel systems except as modified by this chapter.

26.1.3 The following definitions shall be applicable to this chapter *(see Section 3.10)*:

(1) *A-Class Boundary* — A boundary designed to resist the passage of smoke and flame for 1 hour when tested in accordance with ASTM E 119, *Standard Test Methods for Fire Tests of Building Construction and Materials.*
(2) *B-Class Boundary* — A boundary designed to resist the passage of flame for ½ hour when tested in accordance with ASTM E 119.
(3) *Central Safety Station* — A continuously manned control station from which all of the fire control equipment is monitored. If this station is not the bridge, direct communication with the bridge shall be provided by means other than the ship's service telephone.
(4)* *Heat-Sensitive Material* — A material whose melting point is below 1700°F (926.7°C).
(5) *Heel* — The inclination of a ship to one side.
(6) *Heel Angle* — The angle defined by the intersection of a vertical line through the center of a vessel and a line perpendicular to the surface of the water.
(7) *International Shore Connection* — A universal connection to the vessel's fire main to which a shoreside fire-fighting water supply can be connected.
(8)* *Marine System* — A sprinkler system installed on a ship, boat, or other floating structure that takes its supply from the water on which the vessel floats.
(9)* *Marine Thermal Barrier* — An assembly that is constructed of noncombustible materials and made intact with the main structure of the vessel, such as shell, structural bulkheads, and decks. A marine thermal barrier shall meet the requirements of a B-Class boundary. In addition, a marine thermal barrier shall be insulated such

Copyright 2014 National Fire Protection Association (NFPA). Licensed, by agreement, for individual use and download on October 4, 2014 to LEADER and READER for designated user PATTARAPORN SRITRAKOOL. No other reproduction or transmission in any form permitted without written permission of NFPA. For inquires or to report unauthorized use, contact licensing@nfpa.org.

that, if tested in accordance with ASTM E 119, *Standard Test Methods for Fire Tests of Building Construction and Materials,* for 15 minutes, the average temperature of the unexposed side does not rise more than 250°F (121°C) above the original temperature, nor does the temperature at any one point, including any joint, rise more than 405°F (207°C) above the original temperature.

(10) *Supervision* — A visual and audible alarm signal given at the central safety station to indicate when the system is in operation or when a condition that would impair the satisfactory operation of the system exists. Supervisory alarms shall give a distinct indication for each individual system component that is monitored.

(11) *Survival Angle* — The maximum angle to which a vessel is permitted to heel after the assumed damage required by stability regulations is imposed.

(12) *Type 1 Stair* — A fully enclosed stair that serves all levels of a vessel in which persons can be employed.

(13) *Marine Water Supply* — The supply portion of the sprinkler system from the water pressure tank or the sea suction of the designated sprinkler system pump up to and including the valve that isolates the sprinkler system from these two water sources.

26.1.4* Occupancy Classifications. Marine environment classifications shall be in accordance with Section 5.1.

26.1.5* Partial Installations.

26.1.5.1 Partial installation of automatic sprinklers shall not be permitted, unless the requirements of 26.1.5.2 or 26.1.5.3 are met.

26.1.5.2 Spaces shall be permitted to be protected with an alternative, approved fire suppression system where such areas are separated from the sprinklered areas with a 1 hour–rated assembly.

26.1.5.3 The requirements of 26.1.5.1 shall not apply where specific sections of this standard permit the omission of sprinklers.

26.2 System Components, Hardware, and Use.

26.2.1* Sprinklers shall have a K-factor of K-2.8 (40) or greater.

26.2.2* Sprinkler piping penetrations shall be designed to preserve the fire integrity of the ceiling or bulkhead penetrated.

26.2.3 Spare Sprinklers.

26.2.3.1 The required stock of spare sprinklers shall be carried for each type of sprinkler installed onboard the vessel.

26.2.3.2 Where fewer than six sprinklers of a particular type are installed, 100 percent spares shall be kept in stock.

26.2.3.3 Where applicable, at least one elastometric gasket shall be kept in the cabinet for each fire department connection that is installed onboard the vessel.

26.2.3.4 The cabinet containing spare sprinklers, special wrenches, and elastometric gaskets shall be located in the same central safety station that contains the alarm annunciator panel(s) and supervisory indicators.

26.2.4 System Pipe and Fittings.

26.2.4.1* When ferrous materials are used for piping between the sea chest and zone control valves, these materials shall be protected against corrosion by hot dip galvanizing or by the use of Schedule 80 piping.

26.2.4.2 Maximum design pressure for copper and brass pipe shall not exceed 250 psi (17.2 bar).

26.2.5 Pipe Support.

26.2.5.1* Pipe supports shall comply with the following:

(1) Pipe supports shall be designed to provide adequate lateral, longitudinal, and vertical sway bracing.
(2) The design shall account for the degree of bracing, which varies with the route and operation of the vessel.
(3) Bracing shall be designed to ensure the following:
   (a) Slamming, heaving, and rolling will not shift sprinkler piping, potentially moving sprinklers above ceilings, bulkheads, or other obstructions.
   (b) Piping and sprinklers will remain in place at a steady heel angle at least equal to the maximum required damaged survival angle.
(4) Pipe supports shall be welded to the structure.
(5) Hangers that can loosen during ship motion or vibration, such as screw-down-type hangers, shall not be permitted.
(6) Hangers that are listed for seismic use shall be permitted to be used in accordance with their listing.

26.2.5.2 Sprinkler piping shall be supported by the primary structural members of the vessel such as beams, girders, and stiffeners.

26.2.5.3* The components of hanger assemblies that are welded directly to the ship structure shall not be required to be listed.

26.2.5.4* U-hook sizes shall be no less than that specified in Table 9.1.2.4.

26.2.6 Valves.

26.2.6.1* All indicating, supply, and zone control valves shall be supervised open from a central safety station.

26.2.6.2 Drain and test valves shall meet the applicable requirements of 46 CFR 56.20 and 56.60.

26.2.6.3 Valve markings shall include the information required by 46 CFR 56.20-5(a).

26.2.7 Fire Department Connections and International Shore Connections.

26.2.7.1* A fire department connection and an International Shore Connection shall be installed.

26.2.7.2 The requirements for a fire department connection in 26.2.7.1 shall not apply to vessels that operate primarily on international voyages.

26.2.7.3 Connections shall be located near the gangway or other shore access point so that they are accessible to the land-based fire department.

26.2.7.4 Fire department and International Shore Connections shall be colored and marked so that the connections are easily located from the shore access point (i.e., gangway location) and will not be confused with a firemain connection.

26.2.7.5 An 18 in. × 18 in. (0.46 m × 0.46 m) sign displaying the symbol for fire department connection as shown in Table 5.2.1 of NFPA 170 shall be placed at the connection so that it is in plain sight from the shore access point.

Copyright 2014 National Fire Protection Association (NFPA). Licensed, by agreement, for individual use and download on October 4, 2014 to LEADER and READER for designated user PATTARAPORN SRITRAKOOL. No other reproduction or transmission in any form permitted without written permission of NFPA. For inquires or to report unauthorized use, contact licensing@nfpa.org.

26.2.7.6 Connections on both sides of the vessel shall be provided where shore access arrangements make it necessary.

26.2.7.7* Fire department connection thread type shall be compatible with fire department equipment.

26.2.7.8 International shore connections shall comply with ASTM F 1121, *Standard Specification for International Shore Connections for Marine Fire Applications.*

26.3 System Requirements.

26.3.1* Relief Valves. Relief valves shall be provided on all wet pipe systems.

26.3.2 Spare Detection Devices. The number of spare detection devices or fusible elements used for protection systems that shall be carried per temperature rating is as follows:

(1) Vessels shall have two spare detection devices or fusible elements when operating voyages are normally less than 24 hours.
(2) Vessels shall have four spare detection devices or fusible elements when operating voyages are normally more than 24 hours.

26.3.3 System Piping Supervision. All preaction sprinkler systems shall be supervised regardless of the number of sprinklers supplied.

26.3.4 Circulating Closed Loop Systems. Circulating closed loop systems shall not be permitted.

26.4 Installation Requirements.

26.4.1 Temperature Zones. Intermediate temperature–rated sprinklers shall be installed under a noninsulated steel deck that is exposed to sunlight.

26.4.2* Residential Sprinklers. Residential sprinklers shall be permitted for use only in sleeping accommodation areas.

26.4.3 Window Protection. Where required, windows shall be protected by sprinklers installed at a distance not exceeding 1 ft (0.3 m) from the glazing at a spacing not exceeding 6 ft (1.8 m) such that the entire glazing surface is wetted at a linear density not less than 6 gpm/ft (75 mm/min), unless listed window sprinkler protection systems are installed in accordance with their installation and testing criteria.

26.4.4* Concealed Spaces.

26.4.4.1 Concealed spaces that are constructed of combustible materials, or materials with combustible finishes or that contain combustible materials, shall be sprinklered.

26.4.4.2 The requirements of 26.4.4.1 shall not apply to concealed spaces that contain only nonmetallic piping that is continuously filled with water.

26.4.5 Vertical Shafts.

26.4.5.1 Sprinklers shall not be required in vertical shafts used as duct, electrical, or pipe shafts that are nonaccessible, noncombustible, and enclosed in an A-Class-rated assembly.

26.4.5.2 Stairway enclosures shall be fully sprinklered.

26.4.6 Bath Modules. Sprinklers shall be installed in bath modules (full room modules) constructed with combustible materials, regardless of room fire load.

26.4.7 Ceiling Types. Drop-out ceilings shall not be used in conjunction with sprinklers.

26.4.8 Return Bends.

26.4.8.1 To prevent sediment buildup, return bends shall be installed in all shipboard sprinkler systems where pendent-type or dry pendent-type sprinklers are used in wet systems *(see Figure 8.15.19.2).*

26.4.8.2 Consideration shall be given concerning the intrusion of saltwater into the system.

26.4.8.3 Specifically, sprinklers shall not be rendered ineffective by corrosion related to saltwater entrapment within the return bend.

26.4.9 Hose Connections. Sprinkler system piping shall not be used to supply hose connections or hose connections for fire department use.

26.4.10 Heat-Sensitive Piping Materials.

26.4.10.1 Portions of the piping system constructed with a heat-sensitive material shall be subject to the following restrictions:

(1) Piping shall be of non–heat-sensitive type from the sea suction up through the penetration of the last A-Class barrier enclosing the space(s) in which the heat-sensitive piping is installed.
(2) B-Class draft stops shall be fitted not more than 45 ft (13.7 m) apart between the marine thermal barrier *(see definitions in Chapter 3 and 26.1.3)* and the deck or shell.
(3) Portions of a system that are constructed from heat-sensitive materials shall be installed behind a marine thermal barrier, unless the provisions of item (4) are met.
(4)* Piping materials with brazed joints shall not be required to be installed behind a marine thermal barrier, provided the following conditions are met:
   (a) The system is of the wet pipe type.
   (b) The piping is not located in spaces containing boilers, internal combustion engines, or piping containing flammable or combustible liquids or gases under pressure, cargo holds, or vehicle decks.
   (c) A relief valve in compliance with 7.1.2 is installed in each section of piping that is capable of being isolated by a valve(s).
   (d) A valve(s) isolating the section of piping from the remainder of the system is installed in accordance with 26.4.10.2 and 26.4.10.3.

26.4.10.2 Each zone in which heat-sensitive piping is installed shall be fitted with a valve capable of segregating that zone from the remainder of the system.

26.4.10.3 The valve shall be supervised and located outside of the zone controlled and within an accessible compartment having A-Class boundaries or within a Type 1 stair.

26.4.11 Discharge of Drain Lines.

26.4.11.1 Drain lines shall not be connected to housekeeping, sewage, or deck drains. Drains shall be permitted to be discharged to bilges.

26.4.11.2 Overboard discharges shall meet the requirements of 46 CFR 56.50-95 and shall be corrosion resistant in accordance with 46 CFR 56.60.

26.4.11.3 Systems that contain water additives that are not permitted to be discharged into the environment shall be specially designed to prevent such discharge.

26.4.11.4 Discharges shall be provided with a down-turned elbow.

Copyright 2014 National Fire Protection Association (NFPA). Licensed, by agreement, for individual use and download on October 4, 2014 to LEADER and READER for designated user PATTARAPORN SRITRAKOOL. No other reproduction or transmission in any form permitted without written permission of NFPA. For inquires or to report unauthorized use, contact licensing@nfpa.org.

26.4.12 Alarm Signals and Devices.

26.4.12.1* A visual and audible alarm signal shall be given at the central safety station to indicate when the system is in operation or when a condition that would impair the satisfactory operation of the system exists.

26.4.12.2 Alarm signals shall be provided for, but not limited to, each of the following: monitoring position of control valves, fire pump power supplies and operating condition, water tank levels and temperatures, zone waterflow alarms, pressure of tanks, and air pressure on dry pipe valves.

26.4.12.3 Alarms shall give a distinct indication for each individual system component that is monitored.

26.4.12.4 An audible alarm shall be given at the central safety station within 30 seconds of waterflow.

26.4.12.5 Waterflow alarms shall be installed for every zone of the sprinkler system.

26.4.12.6 Sprinkler zones shall not encompass more than two adjacent decks or encompass more than one main vertical zone.

26.4.12.7 Electrically operated alarm attachments shall comply with, meet, and be installed in accordance with the requirements of 46 CFR, Subchapter J, "Electrical Engineering."

26.4.12.8 All wiring shall be chosen and installed in accordance with IEEE 45, *Recommended Practice for Electrical Installations on Shipboard*.

26.4.13 Test Connections. Where test connections are below the bulkhead deck, they shall comply with the overboard discharge arrangements of 46 CFR 56.50-95.

26.4.14 Protection of Copper Tubing. Copper tubing materials shall be protected against physical damage in areas where vehicles and stores handling equipment operate.

26.5 Design Approaches.

26.5.1 Design Options.

26.5.1.1 Marine sprinkler systems shall be designed using the hydraulic calculation procedure of Chapter 23.

26.5.1.2 The pipe schedule method shall not be used to determine the water demand requirements.

26.5.2* Window Protection. Minimum water demand requirements shall include sprinklers that are installed for the protection of windows as described in 26.4.3.

26.5.3* Hose Stream Allowance. No allowance for hose stream use shall be required.

26.6 Plans and Calculations.

26.6.1 Additional Information. The pressure tank size, high-pressure relief setting, high- and low-water alarm settings, low-pressure alarm setting, and pump start pressure shall be provided.

26.6.2 Sprinklers specifically installed for the protection of windows under 26.4.3 shall be permitted to be of a different size from those protecting the remainder of the occupancy classification.

26.6.3 All of the window sprinklers, however, shall be of the same size.

26.6.4* Marine sprinkler systems shall be designed and installed to be fully operational without a reduction in system performance when the vessel is upright and inclined at the angles of inclination specified in 46 CFR 58.01-40.

26.7 Water Supplies.

26.7.1 General. The water supply requirements for marine applications shall be in accordance with Section 26.7.

26.7.2 Pressure Tank.

26.7.2.1 Unless the requirements of 26.7.2.2 are met, a pressure tank shall be provided. The pressure tank shall be sized and constructed so that the following occurs:

(1) The tank shall contain a standing charge of freshwater equal to that specified by Table 26.7.2.1.
(2) The pressure tank shall be sized in accordance with 24.2.4.
(3) A glass gauge shall be provided to indicate the correct level of water within the pressure tank.
(4) Arrangements shall be provided for maintaining an air pressure in the tank such that, while the standing charge of water is being expended, the pressure will not be less than that necessary to provide the design pressure and flow of the hydraulically most remote design area.
(5) Suitable means of replenishing the air under pressure and the freshwater standing charge in the tank shall be provided.
(6) Tank construction shall be in accordance with the applicable requirements of 46 CFR, Subchapter F, "Marine Engineering."

Table 26.7.2.1 Required Water Supply

System Type	Additional Water Volume
Wet pipe system	Flow requirement of the hydraulically most remote system demand for 1 minute
Preaction system Deluge system Dry pipe system	Flow requirement of the hydraulically most remote system demand for 1 minute of system demand plus the volume needed to fill all dry piping

26.7.2.2 Pressure Tank Alternative. In lieu of a pressure tank, a dedicated pump connected to a freshwater tank shall be permitted to be used, provided the following conditions are met:

(1) The pump is listed for marine use and is sized to meet the required system demand.
(2) The suction for the fire pump is located below the suction for the freshwater system so that there shall be a minimum water supply of at least 1 minute for the required system demand.
(3) Pressure switches are provided in the system and the controller for the pump that automatically start the pump within 10 seconds after detection of a pressure drop of more than 5 percent.

Copyright 2014 National Fire Protection Association (NFPA). Licensed, by agreement, for individual use and download on October 4, 2014 to LEADER and READER for designated user PATTARAPORN SRITRAKOOL. No other reproduction or transmission in any form permitted without written permission of NFPA. For inquires or to report unauthorized use, contact licensing@nfpa.org.

(4) There shall be a reduced pressure zone backflow preventer to prevent contamination of the potable water system by saltwater.
(5) This pump has at least two sources of power. Where the sources of power are electrical, these shall be a main generator and an emergency source of power. One supply shall be taken from the main switchboard, by separate feeder reserved solely for that purpose. This feeder shall be run to an automatic changeover switch situated near the sprinkler unit, and the switch shall normally be kept closed to the feeder from the emergency switchboard. The changeover switch shall be clearly labeled, and no other switch shall be permitted in these feeders.

26.7.2.3 Relief Valves.

26.7.2.3.1 Relief valves shall be installed on the tank to avoid overpressurization and false actuation of any dry pipe valve.

26.7.2.3.2 Relief valves shall comply with 46 CFR 54.15-10.

26.7.2.4 Power Source.

26.7.2.4.1 There shall be not less than two sources of power for the compressors that supply air to the pressure tank.

26.7.2.4.2 Where the sources of power are electrical, these shall be a main generator and an emergency source of power.

26.7.2.4.3 One supply shall be taken from the main switchboard, by separate feeders reserved solely for that purpose.

26.7.2.4.4 Such feeders shall be run to a changeover switch situated near the air compressor, and the switch normally shall be kept closed to the feeder from the emergency switchboard.

26.7.2.4.5 The changeover switch shall be clearly labeled, and no other switch shall be permitted in these feeders.

26.7.2.5 Multiple Tanks.

26.7.2.5.1 More than one pressure tank can be installed, provided that each is treated as a single water source when determining valve arrangements.

26.7.2.5.2 Check valves shall be installed to prohibit flow from tank to tank or from pump to tank, unless the tank is designed to hold only pressurized air.

26.7.2.6 In systems subject to use with saltwater, valves shall be so arranged as to prohibit contamination of the pressure tank with saltwater.

26.7.2.7* Where applicable, a means shall be provided to restrict the amount of air that can enter the pressure tank from the air supply system. A means shall also be provided to prevent water from backflowing into the air supply system.

26.7.3 Fire Pump.

26.7.3.1 A dedicated, automatically controlled pump that is listed for marine service, which takes suction from the sea, shall be provided to supply the sprinkler system.

26.7.3.2 Where two pumps are required to ensure the reliability of the water supply, the pump that supplies the fire main shall be allowed to serve as the second fire pump.

26.7.3.3* The pump shall be sized to meet the water demand of the hydraulically most demanding area.

26.7.3.4 Pumps shall be designed to not exceed 120 percent of the rated capacity of the pump.

26.7.3.5 The system shall be designed so that, before the supply falls below the design criteria, the fire pump shall be automatically started and shall supply water to the system until manually shut off.

26.7.3.6 Where pump and freshwater tank arrangement is used in lieu of the pressure tank, there must be a pressure switch that senses a system pressure drop of 25 percent, and the controller must automatically start the fire pump(s) if pressure is not restored within 20 seconds.

26.7.3.7 There shall be not less than two sources of power supply for the fire pumps. Where the sources of power are electrical, these shall be a main generator and an emergency source of power.

26.7.3.8 One supply shall be taken from the main switchboard by separate feeders reserved solely for that purpose.

26.7.3.9 Such feeders shall be run to a changeover switch situated near to the sprinkler unit, and the switch normally shall be kept closed to the feeder from the emergency switchboard.

26.7.3.10 The changeover switch shall be clearly labeled, and no other switch shall be permitted in these feeders.

26.7.3.11 Test Valves.

26.7.3.11.1 A test valve(s) shall be installed on the discharge side of the pump with a short open-ended discharge pipe.

26.7.3.11.2 The area of the pipe shall be adequate to permit the release of the required water output to supply the demand of the hydraulically most remote area.

26.7.3.12 Multiple Pumps.

26.7.3.12.1 Where two fire pumps are required to ensure the reliability of the water supply, each fire pump shall meet the requirements of 26.7.3.1 through 26.7.3.4.

26.7.3.12.2 In addition, a system that is required to have more than one pump shall be designed to accommodate the following features:

(1)*Pump controls and system sensors shall be arranged such that the secondary pump will automatically operate if the primary pump fails to operate or deliver the required water pressure and flow. *[Figure A.26.7.3.12.2(1) is an example of an acceptable dual pump arrangement.]*
(2) Both pumps shall be served from normal and emergency power sources. However, where approved by the authority having jurisdiction, the secondary pump shall be permitted to be nonelectrically driven.
(3) Pump failure or operation shall be indicated at the central safety station.

26.7.3.13* If not specifically prohibited, the fire pump that supplies the fire main shall be permitted to be used as the second pump, provided the following conditions are met:

(1) The pump is adequately sized to meet the required fire hose and sprinkler system pressure and flow demands simultaneously.
(2) The fire main system is segregated from the sprinkler system by a normally closed valve that is designed to automatically open upon failure of the designated fire pump.
(3) The fire pump that supplies the fire main is automatically started in the event of dedicated fire pump failure or loss of pressure in the sprinkler main. *(See Figure A.26.7.3.13.)*

Copyright 2014 National Fire Protection Association (NFPA). Licensed, by agreement, for individual use and download on October 4, 2014 to LEADER and READER for designated user PATTARAPORN SRITRAKOOL. No other reproduction or transmission in any form permitted without written permission of NFPA. For inquires or to report unauthorized use, contact licensing@nfpa.org.

26.7.4 Water Supply Configurations.

26.7.4.1 The pressure tank and fire pump shall be located in a position reasonably remote from any machinery space of Category A.

26.7.4.2 All valves within the water supply piping system shall be supervised.

26.7.4.3 Only freshwater shall be used as the initial charge within the piping network.

26.7.4.4 The sprinkler system shall be cross-connected with the ship's fire main system and fitted with a lockable screw-down nonreturn valve such that backflow from the sprinkler system to the fire main is prevented.

26.7.4.5 The piping, tanks, and pumps that make up the water supply shall be installed in accordance with the applicable requirements of 46 CFR, Subchapter F, "Marine Engineering."

26.7.4.6* When a shorewater supply is to be used during extended dockside periods, the water supply shall be qualified in the manner described in 24.2.2.

26.7.4.7 Tests shall be conducted in accordance with the requirements of the local shore-based authority having jurisdiction.

26.7.4.8 The water supply information listed in Section 23.2 shall then be provided to the authority having jurisdiction.

26.8 System Acceptance.

26.8.1 Hydrostatic Tests. In addition to the interior piping, the test required by 25.2.1.10 shall also be conducted on all external water supply connections including international shore and fireboat connections.

26.8.2 Alarm Test. A waterflow test shall result in an alarm at the central safety station within 30 seconds after flow through the test connection begins.

26.8.3 Operational Tests.

26.8.3.1 Pressure tank and pump operation, valve actuation, and waterflow shall also be tested.

26.8.3.2 Pump operation and performance shall be tested in accordance with Chapter 14 of NFPA 20.

26.9 System Instructions and Maintenance.

26.9.1 Instructions for operation, inspection, maintenance, and testing shall be kept on the vessel.

26.9.2 Records of inspections, tests, and maintenance required by NFPA 25 shall also be kept on the vessel.

Chapter 27 System Inspection, Testing, and Maintenance

27.1* General. A sprinkler system installed in accordance with this standard shall be properly inspected, tested, and maintained by the property owner or their authorized representative in accordance with NFPA 25 to provide at least the same level of performance and protection as designed.

27.2* Inactive Sprinkler Systems Abandoned in Place.

27.2.1 Where all or part of an inactive sprinkler system is abandoned in place, components including sprinklers, hose valves and hoses, and alarm devices shall be removed.

27.2.2 Control valves abandoned in place shall have the operating mechanisms removed.

27.2.3 Sprinkler system piping and/or valves abandoned in place shall be uniquely identified to differentiate them from active system piping and valves.

Annex A Explanatory Material

Annex A is not a part of the requirements of this NFPA document but is included for informational purposes only. This annex contains explanatory material, numbered to correspond with the applicable text paragraphs.

A.1.1 This standard provides a range of sprinkler system approaches, design development alternatives, and component options that are all acceptable. Building owners and their designated representatives are advised to carefully evaluate proposed selections for appropriateness and preference.

A.1.1.3 This standard also provides guidance for the installation of systems for exterior protection and specific hazards. Where these systems are installed, they are also designed for protection of a fire from a single ignition source.

A.1.2 Since its inception, this document has been developed on the basis of standardized materials, devices, and design practices. However, Section 1.2 and other subsections such as 6.3.7.8 and 8.4.8 allow the use of materials and devices not specifically designated by this standard, provided such use is within parameters established by a listing organization. In using such materials or devices, it is important that all conditions, requirements, and limitations of the listing be fully understood and accepted and that the installation be in complete accord with such listing requirements.

A.3.2.1 Approved. The National Fire Protection Association does not approve, inspect, or certify any installations, procedures, equipment, or materials; nor does it approve or evaluate testing laboratories. In determining the acceptability of installations, procedures, equipment, or materials, the authority having jurisdiction may base acceptance on compliance with NFPA or other appropriate standards. In the absence of such standards, said authority may require evidence of proper installation, procedure, or use. The authority having jurisdiction may also refer to the listings or labeling practices of an organization that is concerned with product evaluations and is thus in a position to determine compliance with appropriate standards for the current production of listed items.

A.3.2.2 Authority Having Jurisdiction (AHJ). The phrase "authority having jurisdiction," or its acronym AHJ, is used in NFPA documents in a broad manner, since jurisdictions and approval agencies vary, as do their responsibilities. Where public safety is primary, the authority having jurisdiction may be a federal, state, local, or other regional department or individual such as a fire chief; fire marshal; chief of a fire prevention bureau, labor department, or health department; building official; electrical inspector; or others having statutory authority. For insurance purposes, an insurance inspection department, rating bureau, or other insurance company representative may be the authority having jurisdiction. In many circumstances, the property owner or his or her designated agent assumes the role of the authority having jurisdiction; at government installations, the commanding officer or departmental official may be the authority having jurisdiction.

Copyright 2014 National Fire Protection Association (NFPA). Licensed, by agreement, for individual use and download on October 4, 2014 to LEADER and READER for designated user PATTARAPORN SRITRAKOOL. No other reproduction or transmission in any form permitted without written permission of NFPA. For inquires or to report unauthorized use, contact licensing@nfpa.org.

A.3.2.3 Listed. The means for identifying listed equipment may vary for each organization concerned with product evaluation; some organizations do not recognize equipment as listed unless it is also labeled. The authority having jurisdiction should utilize the system employed by the listing organization to identify a listed product.

A.3.3.2 Bathroom. A room is still considered a bathroom if it contains just a toilet. Additionally, two bathrooms can be adjacent to each other and are considered separate rooms, provided they are enclosed with the required level of construction. A compartment containing only a toilet, regardless of its intended use, is considered a bathroom.

A.3.3.4 Ceiling Pocket. It is not the intent of this definition to be applied to structural and/or framing members otherwise used to define obstructed or unobstructed construction. Ceiling pockets can be protected or unprotected. A ceiling pocket where the upper ceiling is within the allowable vertical distance from the sprinkler deflector should be considered a protected ceiling pocket. Buildings with protected ceiling pockets are permitted to use the quick-response reduction of 11.2.3.2.3. Buildings with unprotected ceiling pockets greater than 32 ft^2 are not allowed to use the quick-response reduction of 11.2.3.2.3.

A.3.3.7 Control Valve. Control valves do not include hose valves, inspector's test valves, drain valves, trim valves for dry pipe, preaction and deluge valves, check valves, or relief valves.

A.3.3.8 Draft Curtain. Additional information about the size and installation of draft curtains can be found in NFPA 204.

A.3.3.16 Limited-Combustible (Material). Material subject to increase in combustibility or flame spread index beyond the limits herein established through the effects of age, moisture, or other atmospheric condition is considered combustible. See NFPA 259 and NFPA 220.

A.3.3.19 Raw Water Source. Examples of raw water sources are mill ponds, lakes, streams, open-top reservoirs, and so forth. Examples of non-raw water sources can include city water supplies, cisterns, pressure tanks, gravity tanks, break tanks, aquifers, and so forth. Water sources that are closed or protected from direct contact with the environment should not be considered raw.

A.3.3.22 Sprinkler System. As applied to the definition of a sprinkler system, each system riser serving a portion of a single floor of a facility or where individual floor control valves are used in a multistory building should be considered a separate sprinkler system. Multiple sprinkler systems can be supplied by a common supply main.

A.3.4.6 Gridded Sprinkler System. See Figure A.3.4.6.

A.3.4.7 Looped Sprinkler System. See Figure A.3.4.7.

A.3.4.10 Preaction Sprinkler System. The actuating means of the valve are described in 7.3.2.1. Actuation of the detection system and sprinklers in the case of double-interlocked systems opens a valve that permits water to flow into the sprinkler piping system and to be discharged from any sprinklers that are open.

A.3.5 See Figure A.3.5.

A.3.6.1 General Sprinkler Characteristics. The response time index (RTI) is a measure of the sensitivity of the sprinkler's thermal element as installed in a specific sprinkler. It is usually determined by plunging a sprinkler into a heated laminar airflow within a test oven. The plunge test is not currently applicable to certain sprinklers.

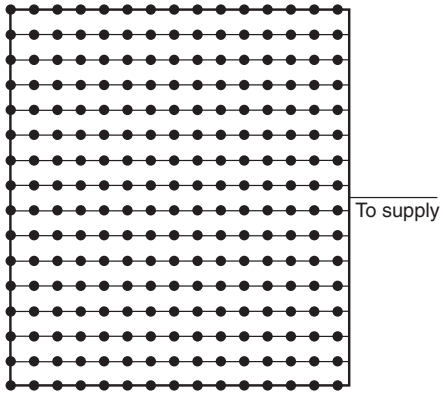

FIGURE A.3.4.6 Gridded System.

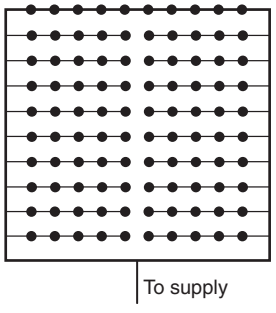

FIGURE A.3.4.7 Looped System.

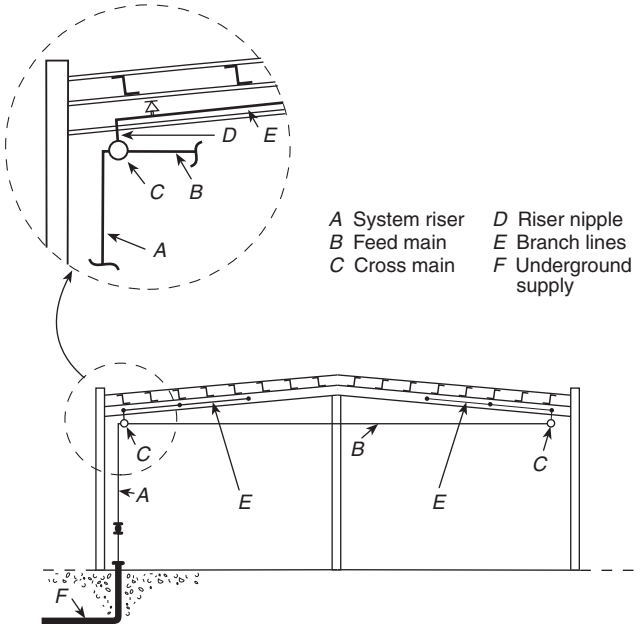

FIGURE A.3.5 Building Elevation Showing Parts of Sprinkler Piping System.

Copyright 2014 National Fire Protection Association (NFPA). Licensed, by agreement, for individual use and download on October 4, 2014 to LEADER and READER for designated user PATTARAPORN SRITRAKOOL. No other reproduction or transmission in any form permitted without written permission of NFPA. For inquires or to report unauthorized use, contact licensing@nfpa.org.

The RTI is calculated using the following:

(1) The operating time of the sprinkler
(2) The operating temperature of the sprinkler's heat-responsive element (as determined in a bath test)
(3) The air temperature of the test oven
(4) The air velocity of the test oven
(5) The sprinkler's conductivity *(c)* factor, which is the measure of conductance between the sprinkler's heat-responsive element and the sprinkler oven mount

Other factors affecting response include the temperature rating, sprinkler position, fire exposure, and radiation.

ISO 6182-1, *Fire protection — Automatic sprinkler systems — Part 1: Requirements and test methods for sprinklers*, currently recognizes the RTI range of greater than 50 (meters-seconds)$^{1/2}$ and less than 80 (meters-seconds)$^{1/2}$ as special response. Such sprinklers can be recognized as special sprinklers under 8.4.8.1.

It should be recognized that the term *fast response* (like the term *quick response* used to define a particular type of sprinkler) refers to the thermal sensitivity within the operating element of a sprinkler, not the time of operation in a particular installation. Many other factors, such as ceiling height, spacing, ambient room temperature, and distance below ceiling, affect the time of response of sprinklers. In most fire scenarios, sprinkler activation times will be shortest where the thermal elements are located 1 in. (25.4 mm) to 3 in. (76.2 mm) below the ceiling. A fast-response sprinkler is expected to operate quicker than a standard-response sprinkler in the same installation orientation. For modeling purposes, concealed sprinklers can be considered equivalent to pendent sprinklers having a similar thermal response sensitivity installed 12 in. (305 mm) below smooth unobstructed ceilings, and recessed sprinklers can be considered equivalent to pendent sprinklers having a similar thermal response sensitivity installed 8 in. (203 mm) below smooth unobstructed ceilings.

A.3.6.3.2 Dry Sprinkler. Under certain ambient conditions, wet pipe systems having dry pendent (or upright) sprinklers can freeze due to heat loss by conduction. Therefore, due consideration should be given to the amount of heat maintained in the heated space, the length of the nipple in the heated space, and other relevant factors.

Dry sprinklers are intended to extend into an unheated area from a wet pipe system or to be used on a dry pipe system.

A.3.6.4.1 Control Mode Specific Application (CMSA) Sprinkler. A large drop sprinkler is a type of CMSA sprinkler that is capable of producing characteristic large water droplets and that is listed for its capability to provide fire control of specific high-challenge fire hazards.

A.3.6.4.2 Early Suppression Fast-Response (ESFR) Sprinkler. It is important to realize that the effectiveness of these highly tested and engineered sprinklers depends on the combination of fast response and the quality and uniformity of the sprinkler discharge. It should also be realized that ESFR sprinklers cannot be relied upon to provide fire control, let alone suppression, if they are used outside the guidelines specified in Chapter 12.

A.3.6.4.7 Quick-Response (QR) Sprinkler. Quick response is a listing for sprinklers that combines the deflector, frame, and body of a spray sprinkler with a fast-response element *[see 3.6.1(a)(1)]* to create a technology that will respond quickly in the event of a fire and deliver water in the same fashion as other types of spray sprinklers.

A.3.6.4.7.1 Quick-Response Early Suppression (QRES) Sprinkler. Research into the development of QRES sprinklers is continuing under the auspices of the National Fire Protection Research Foundation. It is expected that the proposed design criteria will be added to the standard when a thorough analysis of the test data is completed.

A.3.7.1 Obstructed Construction. The following examples of obstructed construction are provided to assist the user in determining the type of construction feature:

(1) *Beam and Girder Construction.* The term *beam and girder construction* as used in this standard includes noncombustible and combustible roof or floor decks supported by wood beams of 4 in. (102 mm) or greater nominal thickness or concrete or steel beams spaced 3 ft to 7½ ft (0.9 m to 2.3 m) on center and either supported on or framed into girders. [Where supporting a wood plank deck, this includes semi-mill and panel construction, and where supporting (with steel framing) gypsum plank, steel deck, concrete, tile, or similar material, this includes much of the so-called noncombustible construction.]
(2) *Concrete Tee Construction.* The term *concrete tee construction* as it is used in this standard refers to solid concrete members with stems (legs) having a nominal thickness less than the nominal height. *[See Figure A.3.7.1(a) for examples of concrete tee construction.]*
(3) *Composite Wood Joist Construction.* The term *composite wood joist construction* refers to wood beams of "I" cross section constructed of wood flanges and solid wood web, supporting a floor or roof deck. Composite wood joists can vary in depth up to 48 in. (1.2 m), can be spaced up to 48 in. (1.2 m) on centers, and can span up to 60 ft (18 m) between supports. Joist channels should be firestopped to the full depth of the joists with material equivalent to the web construction so that individual channel areas do not exceed 300 ft^2 (27.9 m^2). *[See Figure A.3.7.1(b) for an example of composite wood joist construction.]*
(4) *Panel Construction.* The term *panel construction* as used in this standard includes ceiling panels formed by members capable of trapping heat to aid the operation of sprinklers and limited to a maximum of 300 ft^2 (27.9 m^2) in area. There should be no unfilled penetrations in the cross-sectional area of the bounding structural members including the interface at the roof. Beams spaced more than 7½ ft (2.3 m) apart and framed into girders qualify as panel construction, provided the 300 ft^2 (27.9 m^2) area limitation is met.
(5) *Semi-Mill Construction.* The term *semi-mill construction* as used in this standard refers to a modified standard mill construction, where greater column spacing is used and beams rest on girders.
(6) *Wood Joist Construction.* The term *wood joist construction* refers to solid wood members of rectangular cross section, which can vary from 2 in. to 4 in. (51 mm to 102 mm) nominal width and can be up to 14 in. (356 mm) nominal depth, spaced up to 3 ft (0.9 m) on centers, and can span up to 40 ft (12 m) between supports, supporting a floor or roof deck. Solid wood members less than 4 in. (102 mm) nominal width and up to 14 in. (356 mm) nominal depth, spaced more than 3 ft (0.9 m) on centers, are also considered as wood joist construction. Wood joists can exceed 14 in. (356 mm) in nominal depth.

Copyright 2014 National Fire Protection Association (NFPA). Licensed, by agreement, for individual use and download on October 4, 2014 to LEADER and READER for designated user PATTARAPORN SRITRAKOOL. No other reproduction or transmission in any form permitted without written permission of NFPA. For inquires or to report unauthorized use, contact licensing@nfpa.org.

(7) *Bar Joist Construction with Fireproofing.* In order to meet building codes, bar joists are often covered with fireproofing materials. In such an event, if greater than 30 percent of the area of the joist is obstructed, it should be considered obstructed construction.

(8) *Steel Purlin Construction.* This term refers to clear span or multiple span buildings with straight or tapered columns and frames supporting C- or Z-type purlins greater than 4 in. (102 mm) in depth spaced up to 7½ ft (2.3 m) on center.

(9) *Truss Construction (Wood or Steel).* The term *truss construction* refers to parallel or pitched chord members connected by open web members supporting a roof or floor deck with top and bottom members greater than 4 in. (102 mm) in depth. *[See Figure A.3.7.2(c).]*

(10) *Bar Joist Construction (Wood or Steel).* The term *bar joist construction* refers to construction employing joists consisting of steel truss-shaped members. Wood truss-shaped members, which consist of wood top and bottom chord members with steel tube or bar webs, are also defined as bar joists. Bar joists include noncombustible or combustible roof or floor decks on bar joist construction with top and bottom chord members greater than 4 in. (102 mm) in depth. *[See Figure A.3.7.2(a) and Figure A.3.7.2(b) for examples of bar joist construction.]*

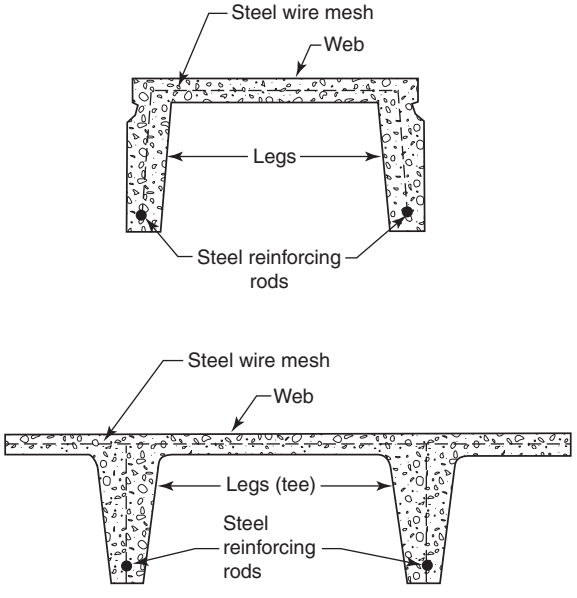

FIGURE A.3.7.1(a) Typical Concrete Tee Construction.

A.3.7.2 Unobstructed Construction. The following examples of unobstructed construction are provided to assist the user in determining the type of construction feature:

(1) *Bar Joist Construction.* The term *bar joist construction* refers to construction employing joists consisting of steel truss-shaped members. Wood truss-shaped members, which consist of wood top and bottom chord members with steel tube or bar webs, are also defined as bar joists. Bar joists include noncombustible or combustible roof or floor decks on bar joist construction with top and bottom chord members not exceeding 4 in. (102 mm) in depth.

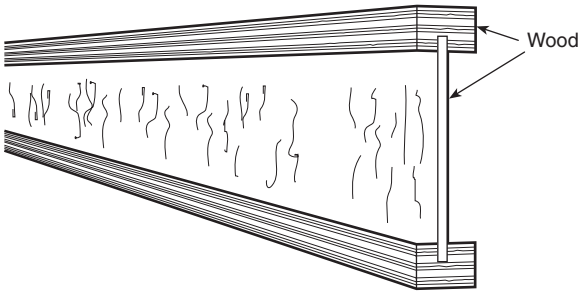

FIGURE A.3.7.1(b) Typical Composite Wood Joist Construction.

[See Figure A.3.7.2(a) and Figure A.3.7.2(b) for examples of bar joist construction.]

(2) *Open-Grid Ceilings.* The term *open-grid ceilings* as used in this standard refers to ceilings in which the openings are ¼ in. (6.4 mm) or larger in the least dimension, the thickness of the ceiling material does not exceed the least dimension of the openings, and the openings constitute at least 70 percent of the ceiling area.

(3) *Smooth Ceiling Construction.* The term *smooth ceiling construction* as used in this standard includes the following:

(a) Flat slab, pan-type reinforced concrete
(b) Continuous smooth bays formed by wood, concrete, or steel beams spaced more than 7½ ft (2.3 m) on centers — beams supported by columns, girders, or trusses
(c) Smooth roof or floor decks supported directly on girders or trusses spaced more than 7½ ft (2.3 m) on center
(d) Smooth monolithic ceilings of at least ¾ in. (19 mm) of plaster on metal lath or a combination of materials of equivalent fire-resistive rating attached to the underside of wood joists, wood trusses, and bar joists
(e) Open-web-type steel beams, regardless of spacing
(f) Smooth shell-type roofs, such as folded plates, hyperbolic paraboloids, saddles, domes, and long barrel shells
(g) Suspended ceilings of combustible or noncombustible construction
(h) Smooth monolithic ceilings with fire resistance less than that specified under item (d) and attached to the underside of wood joists, wood trusses, and bar joists

Combustible or noncombustible floor decks are permitted in the construction specified in A.3.7.2(3)(b) through (f). Item (b) would include standard mill construction.

(4) *Standard Mill Construction.* The term *standard mill construction* as used in this standard refers to heavy timber construction as defined in NFPA 220.

(5) *Truss Construction (Wood or Steel).* The term *truss construction* refers to parallel or pitched chord members connected by open web members supporting a roof or floor deck with top and bottom members not exceeding 4 in. (102 mm) in depth. *[See Figure A.3.7.2(c).]*

A.3.8.1.11 Private Fire Service Main. See Figure A.3.8.1.11.

A.3.9.1 General. A six-sided portable storage container can be a combustible or noncombustible enclosed storage unit with varying dimensions ranging from small portable rental storage units to large freight containers. The Technical Committee on Sprinkler System Discharge is unaware of fire tests, and no design guidance is furnished.

Copyright 2014 National Fire Protection Association (NFPA). Licensed, by agreement, for individual use and download on October 4, 2014 to LEADER and READER for designated user PATTARAPORN SRITRAKOOL. No other reproduction or transmission in any form permitted without written permission of NFPA. For inquires or to report unauthorized use, contact licensing@nfpa.org.

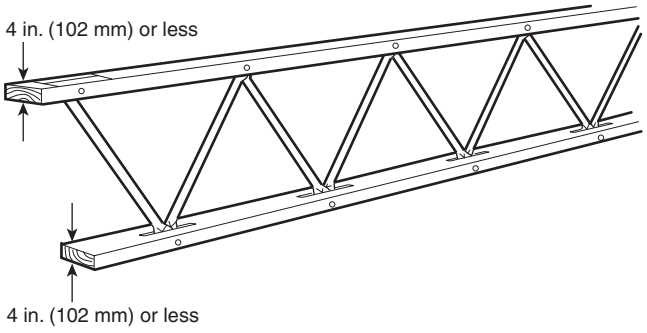

FIGURE A.3.7.2(a) Wood Bar Joist Construction.

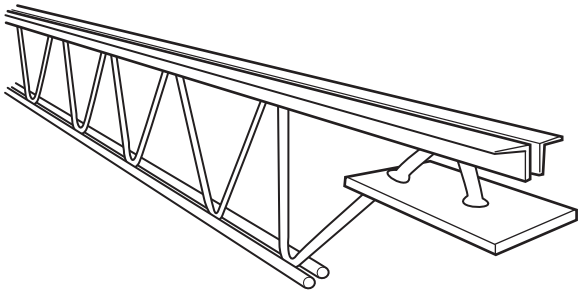

FIGURE A.3.7.2(b) Open-Web Bar Joist Construction.

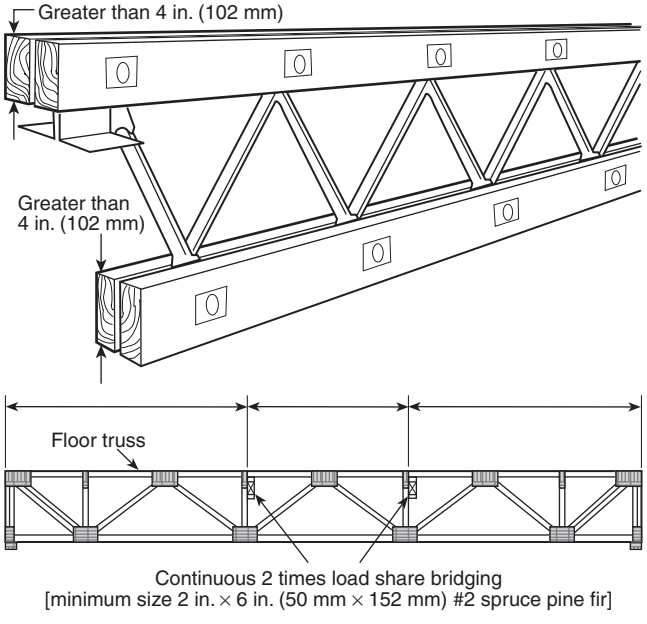

FIGURE A.3.7.2(c) Examples of Wood Truss Construction.

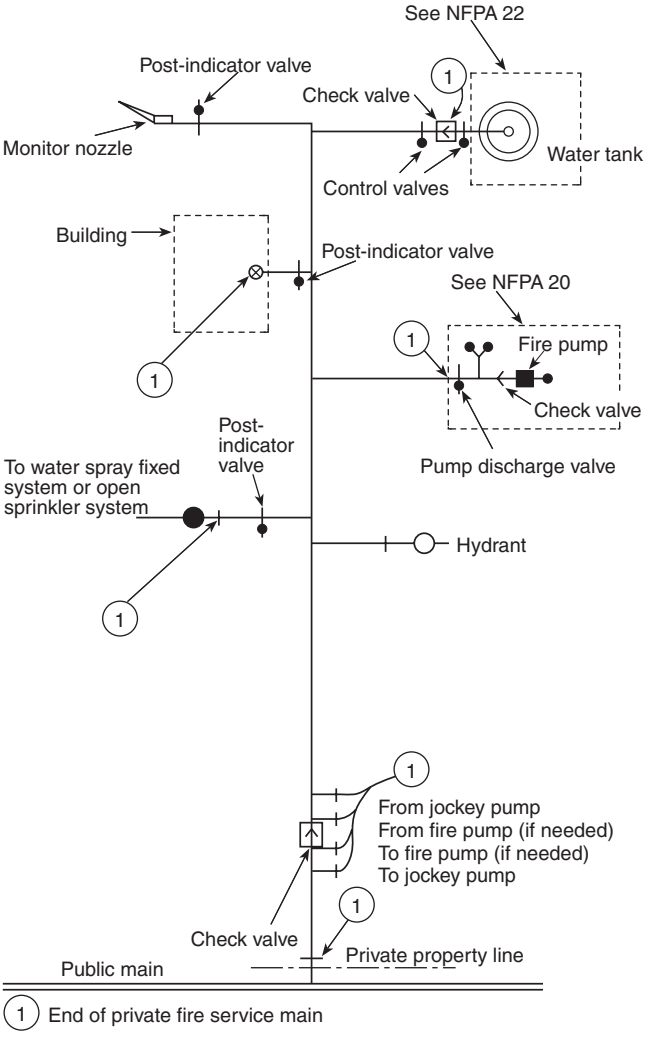

Note: The piping (aboveground or buried) shown is specific as to the end of the private fire service main and schematic only for illustrative purposes beyond. Details of valves and their location requirements are covered in the specific standard involved.

FIGURE A.3.8.1.11 Typical Private Fire Service Main.

A.3.9.1.1 Available Height for Storage. For new sprinkler installations, the maximum height of storage is the height at which commodities can be stored above the floor where the minimum required unobstructed space below sprinklers is maintained. For the evaluation of existing situations, the maximum height of storage is the maximum existing height if space between the sprinklers and storage is equal to or greater than required.

A.3.9.1.3 Carton Records Storage. Carton records storage is a Class III commodity when it is within the definition of 5.6.3.3 and is permitted to contain a limited amount (5 percent by weight or volume or less) of Group A or Group B plastics. Materials stored include Class I and II commodities, paper business records, books, magazines, stationery, newspapers, cardboard dividers, and cartons. See Table A.5.6.3.3.

A.3.9.1.9 Compartmented. Cartons used in most of the Factory Mutual–sponsored plastic tests involved an ordinary 200 lb (90.7 kg) test of outside corrugated cartons with five layers of vertical pieces of corrugated carton used as dividers on the inside. There were also single horizontal pieces of corrugated carton between each layer.

Copyright 2014 National Fire Protection Association (NFPA). Licensed, by agreement, for individual use and download on October 4, 2014 to LEADER and READER for designated user PATTARAPORN SRITRAKOOL. No other reproduction or transmission in any form permitted without written permission of NFPA. For inquires or to report unauthorized use, contact licensing@nfpa.org.

Other tests sponsored by the Society of Plastics Industry, Industrial Risk Insurers, Factory Mutual, and Kemper used two vertical pieces of carton (not corrugated) to form an "X" in the carton for separation of product. This arrangement was not considered compartmented, as the pieces of carton used for separations were flexible (not rigid), and only two pieces were used in each carton.

A.3.9.1.10 Container (Shipping, Master, or Outer Container). The term *container* includes items such as cartons and wrappings. Fire-retardant containers or tote boxes do not by themselves create a need for automatic sprinklers unless coated with oil or grease. Containers can lose their fire-retardant properties if washed. For obvious reasons, they should not be exposed to rainfall.

A.3.9.1.11 Conventional Pallets. See Figure A.3.9.1.11.

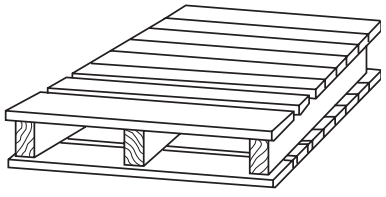

Conventional pallet

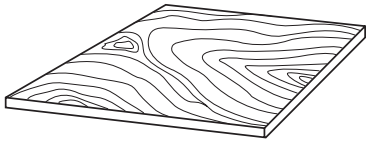

Solid flat bottom
wood pallet (slave pallet)

FIGURE A.3.9.1.11 Typical Pallets.

A.3.9.1.12 Encapsulation. Totally noncombustible commodities on wood pallets enclosed only by a plastic sheet as described are not covered under this definition. Banding (i.e., stretch-wrapping around the sides only of a pallet load) is not considered to be encapsulation. Where there are holes or voids in the plastic or waterproof cover on the top of the carton that exceed more than half of the area of the cover, the term *encapsulated* does not apply. The term *encapsulated* does not apply to plastic-enclosed products or packages inside a large, nonplastic, enclosed container.

A.3.9.1.18 Miscellaneous Storage. The sprinkler system design criteria for miscellaneous storage at heights below 12 ft (3.7 m) are covered by this standard in Chapter 12. Chapter 12 describes design criteria, and Section 8.2 describes installation requirements (area limits). These requirements apply to all storage of 12 ft (3.7 m) or less in height.

A.3.9.1.19 Open-Top Container. Open-top containers can prevent water from running across the top to storage and down the flues and can also collect water. The container will prevent water penetration to a fire in lower levels where it is needed. Rack or flue collapse can also occur if too much water is collected. Consideration should be given to the potential degree of water collection possible within the container when applying the definition of an open-top container. The following conditions should be considered:

(1) Small openings at the top of containers containing such items as fresh produce are quite common and should not be considered as an open-top container.
(2) Arrangements that include open-top containers that are all located on the bottom tier of rack storage do not prevent penetration of water and should not be considered an open-top container.
(3) Containers having either wire mesh siding or large uniform openings along the bottom perimeter of each container, such that water enters the container at the same flow rate and discharge evenly into the flue spaces should not be considered as an open-top container provided the contents of the container are not water absorbent and are not capable of blocking such container openings.
(4) Open-top containers that are stored in fixed location on racks equipped with flat or domed-shaped fixed-in-place lids that are provided directly above the open-top containers and prevent water from entering the open-top container, as well as distribute water equally into all flue spaces should not be considered an open-top container.

A.3.9.1.22 Reinforced Plastic Pallet. See Figure A.3.9.1.22(a) and Figure A.3.9.1.22(b).

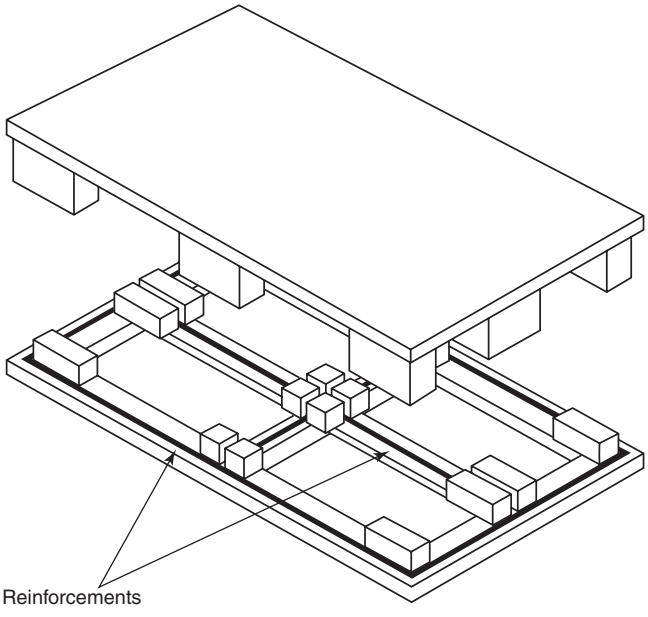

FIGURE A.3.9.1.22(a) Cut-Away Reinforced Plastic Pallet.

A.3.9.2.1.2 Open Array. Fire tests conducted to represent a closed array utilized 6 in. (152 mm) longitudinal flues and no transverse flues. Fire tests conducted to represent an open array utilized 12 in. (305 mm) longitudinal flues.

A.3.9.2.4 Pile Stability, Stable Piles. Pile stability performance has been shown to be a difficult factor to judge prior to a pile being subjected to an actual fire. In the test work completed, compartmented cartons *(see A.3.9.1.9, Compartmented)* have been shown to be stable under fire conditions. Tests also indicated cartons that were not compartmented tended to be unstable under fire conditions.

Copyright 2014 National Fire Protection Association (NFPA). Licensed, by agreement, for individual use and download on October 4, 2014 to LEADER and READER for designated user PATTARAPORN SRITRAKOOL. No other reproduction or transmission in any form permitted without written permission of NFPA. For inquires or to report unauthorized use, contact licensing@nfpa.org.

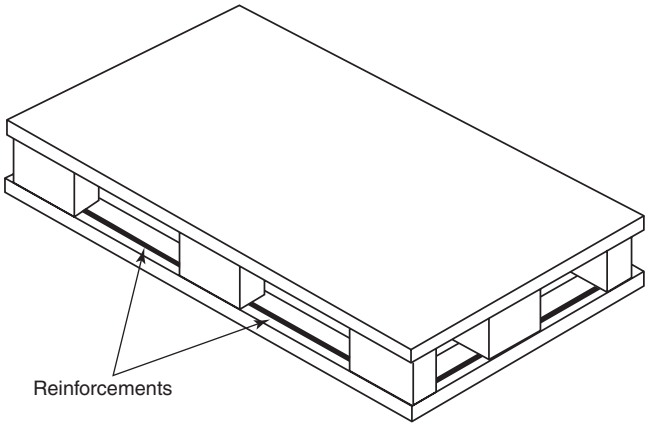

FIGURE A.3.9.1.22(b) Assembled Reinforced Plastic Pallet.

Storage on pallets, compartmented storage, and plastic components that are held in place by materials that do not deform readily under fire conditions are examples of stable storage.

A.3.9.2.5 Pile Stability, Unstable Piles. Leaning stacks, crushed bottom cartons, and reliance on combustible bands for stability are examples of potential pile instability under a fire condition. An increase in pile height tends to increase instability.

A.3.9.2.6 Shelf Storage. Shelves are usually 2 ft (0.6 m) apart vertically.

A.3.9.2.6.1 Back-to-Back Shelf Storage. The requirement for the lack of a longitudinal flue space does not prohibit a small gap between the units or a small gap between the shelves and the vertical barrier. See Figure A.3.9.2.6.1.

A.3.9.3.1 Aisle Width. See Figure A.3.9.3.1.

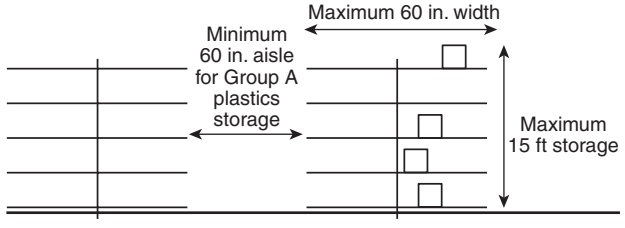

FIGURE A.3.9.2.6.1 Back-to-Back Shelf Storage.

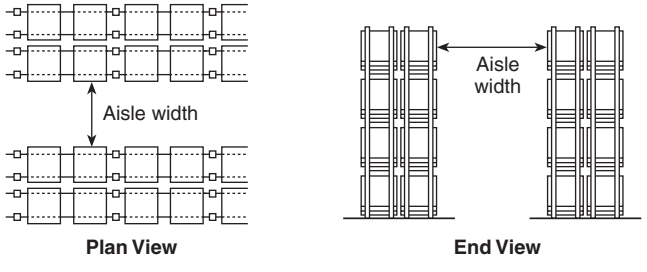

FIGURE A.3.9.3.1 Illustration of Aisle Width.

A.3.9.3.4 Face Sprinklers. All face sprinklers should be located within the rack structure. The flue spaces are generally created by the arrangement of the racks, and "walkways" should not be considered flue spaces.

A.3.9.3.6 Longitudinal Flue Space. See Figure A.3.9.3.6.

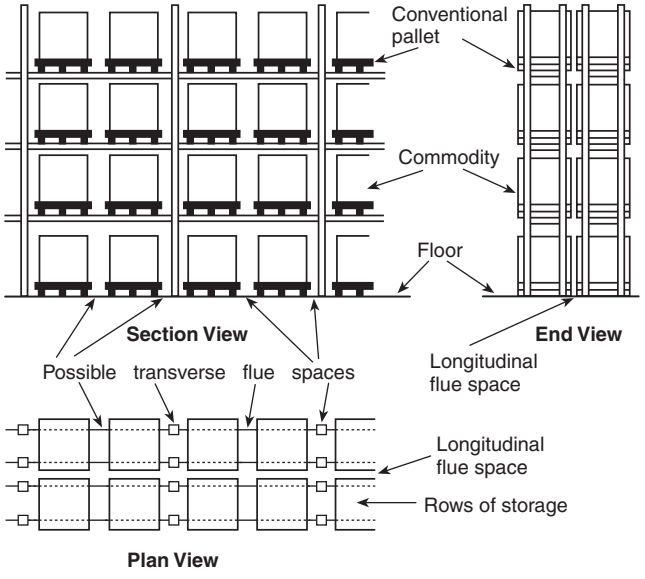

FIGURE A.3.9.3.6 Typical Double-Row (Back-to-Back) Rack Arrangement.

A.3.9.3.7 Rack. Shelving in some rack structures use shelves that can be solid, slatted, or open. Racks can be fixed, portable, or movable. Loading can be either manual, using lift trucks, stacker cranes, or hand placement, or automatic, using machine-controlled storage and retrieval systems.

Rack storage as referred to in this standard contemplates commodities in a rack structure, usually steel. Many variations of dimensions are found. Racks can be single-, double-, or multiple-row, with or without solid shelving. The standard commodity used in most of the tests was 42 in. (1.07 m) on a side. The types of racks covered in this standard are as follows:

(1) *Double-Row Racks.* Pallets rest on two beams parallel to the aisle. Any number of pallets can be supported by one pair of beams. *[See Figure A.3.9.3.7(a) through Figure A.3.9.3.7(d).]*
(2) *Automatic Storage-Type Rack.* The pallet is supported by two rails running perpendicular to the aisle. *[See Figure A.3.9.3.7(e).]*
(3) *Multiple-Row Racks More Than Two Pallets Deep, Measured Aisle to Aisle.* These racks include drive-in racks, drive-through racks, flow-through racks, portable racks arranged in the same manner, and conventional or automatic racks with aisles less than 42 in. (1.07 m) wide. *[See Figure A.3.9.3.7(f) through Figure A.3.9.3.7(i).]*
(4) *Movable Racks.* Movable racks are racks on fixed rails or guides. They can be moved back and forth only in a horizontal, two-dimensional plane. A moving aisle is created as abutting racks are either loaded or unloaded, then moved across the aisle to abut other racks. *[See Figure A.3.9.3.7(k).]*
(5) *Solid Shelving.* Conventional pallet racks with plywood shelves on the shelf beams *[see Figure A.3.9.3.7(c) and Figure A.3.9.3.7(d)]*. These racks are used in special cases. *(See Chapter 12.)*

Copyright 2014 National Fire Protection Association (NFPA). Licensed, by agreement, for individual use and download on October 4, 2014 to LEADER and READER for designated user PATTARAPORN SRITRAKOOL. No other reproduction or transmission in any form permitted without written permission of NFPA. For inquires or to report unauthorized use, contact licensing@nfpa.org.

(6) *Cantilever Rack.* The load is supported on arms that extend horizontally from columns. The load can rest on the arms or on shelves supported by the arms. *[See Figure A.3.9.3.7(j).]*

Load depth in conventional or automatic racks should be considered a nominal 4 ft (1.22 m). *[See Figure A.3.9.3.7(b).]*

When catwalks are installed between racks, these areas are not to be considered flue spaces.

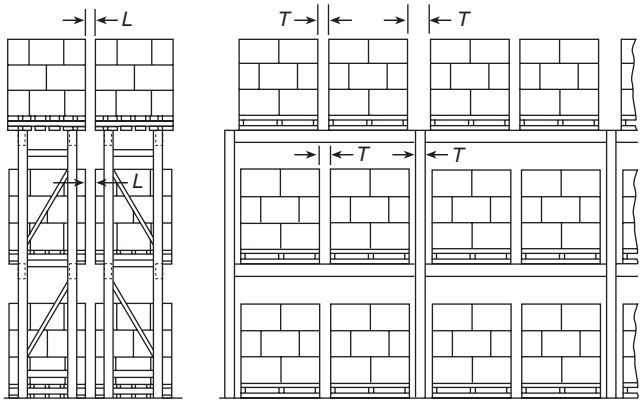

L Longitudinal flue space
T Transverse flue space

FIGURE A.3.9.3.7(a) Conventional Pallet Rack.

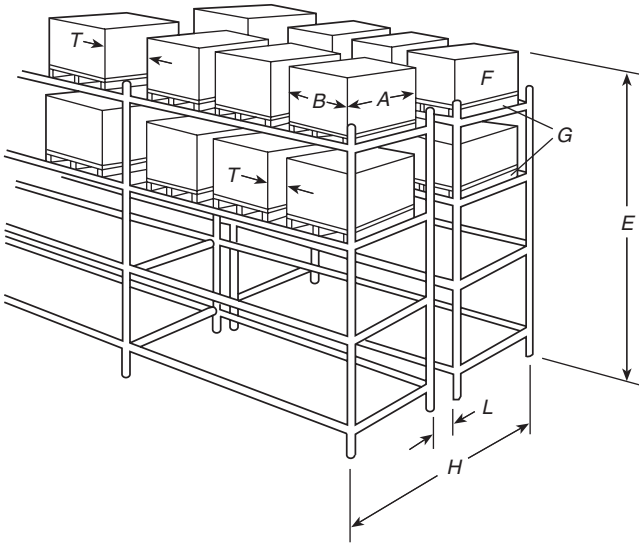

A Load depth
B Load width
E Storage height
F Commodity
G Pallet
H Rack depth
L Longitudinal flue space
T Transverse flue space

FIGURE A.3.9.3.7(b) Double-Row Racks Without Solid or Slatted Shelves.

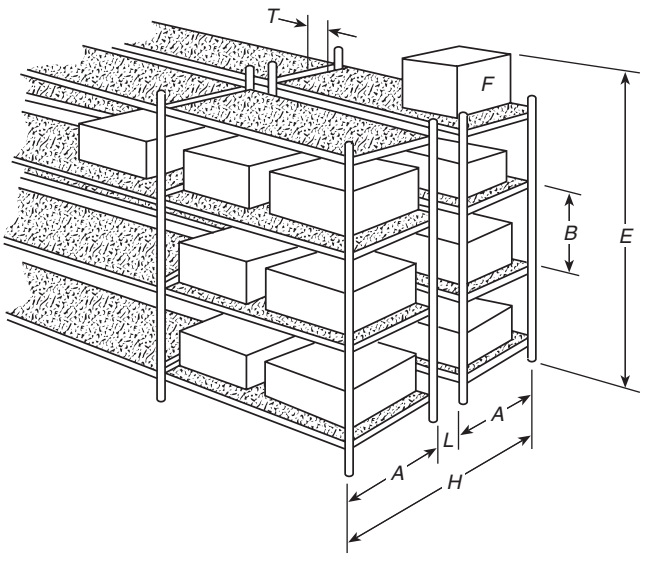

A Shelf depth
B Shelf height
E Storage height
F Commodity
H Rack depth
L Longitudinal flue space
T Transverse flue space

FIGURE A.3.9.3.7(c) Double-Row Racks with Solid Shelves.

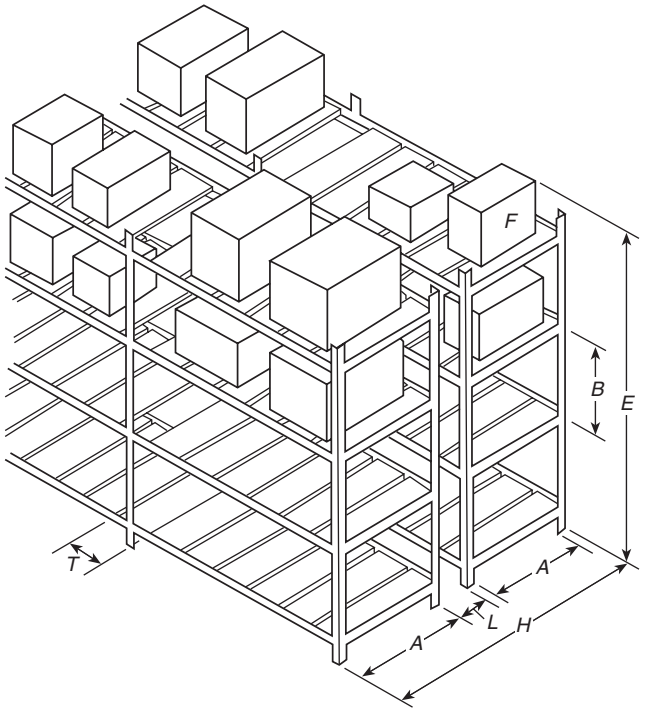

A Shelf depth
B Shelf height
E Storage height
F Commodity
H Rack depth
L Longitudinal flue space
T Transverse flue space

FIGURE A.3.9.3.7(d) Double-Row Racks with Slatted Shelves.

Copyright 2014 National Fire Protection Association (NFPA). Licensed, by agreement, for individual use and download on October 4, 2014 to LEADER and READER for designated user PATTARAPORN SRITRAKOOL. No other reproduction or transmission in any form permitted without written permission of NFPA. For inquires or to report unauthorized use, contact licensing@nfpa.org.

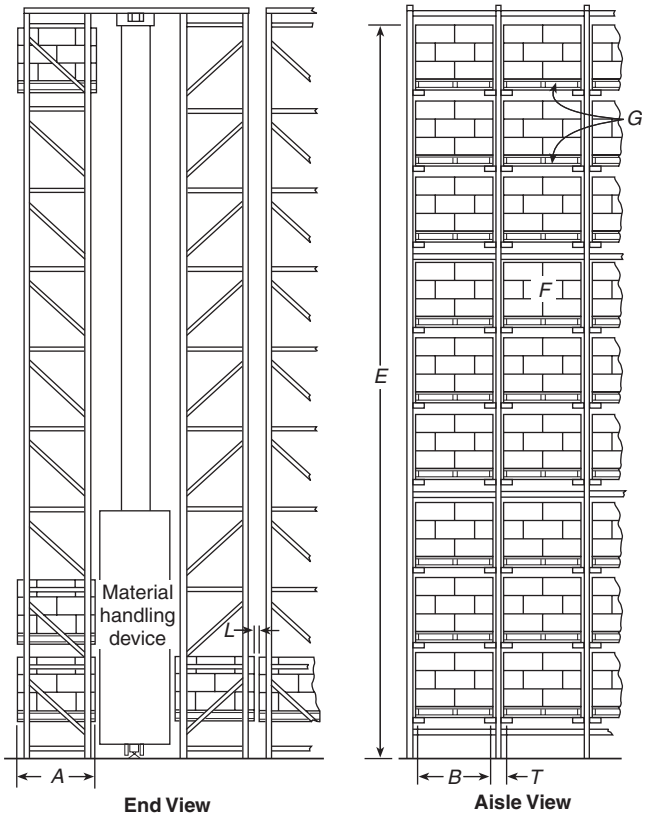

A Load depth
B Load width
E Storage height
F Commodity
G Pallet
L Longitudinal flue space
T Transverse flue space

FIGURE A.3.9.3.7(e) Automatic Storage-Type Rack.

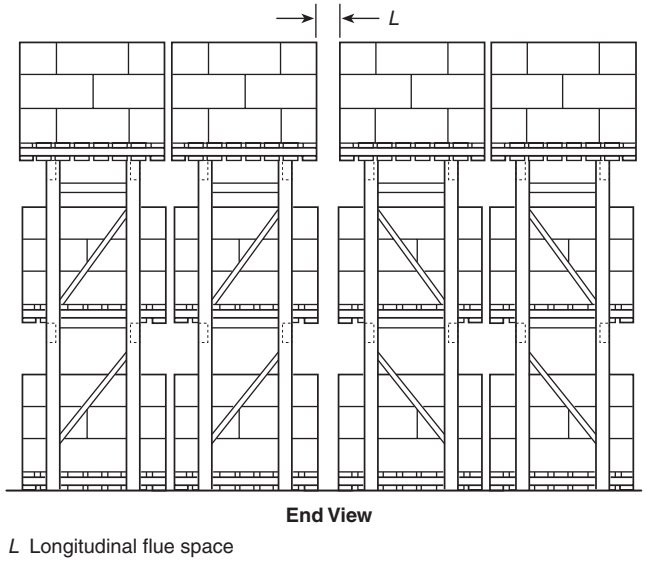

L Longitudinal flue space

FIGURE A.3.9.3.7(f) Multiple-Row Rack Served by Reach Truck.

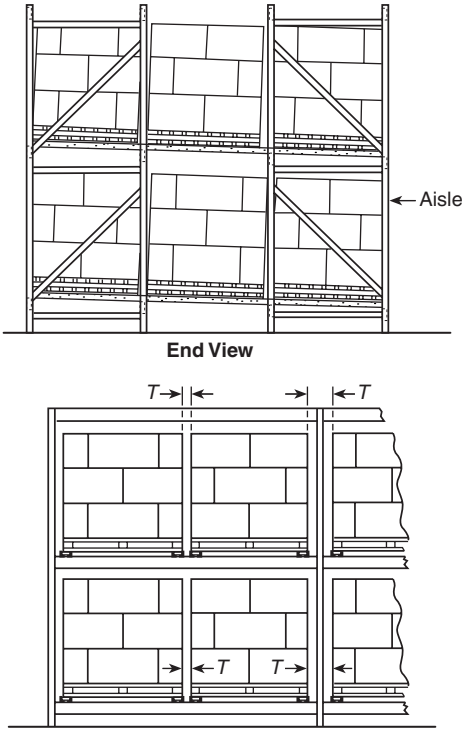

T Transverse flue space

FIGURE A.3.9.3.7(g) Flow-Through Pallet Rack.

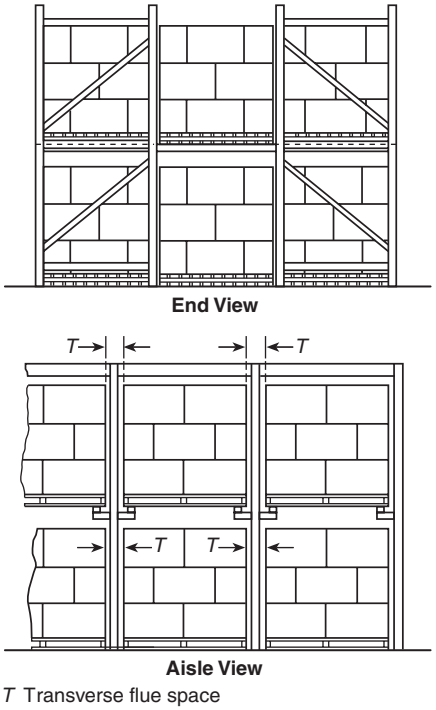

T Transverse flue space

FIGURE A.3.9.3.7(h) Drive-In Rack — Two or More Pallets Deep (Fork Truck Drives into Rack to Deposit and Withdraw Loads in Depth of Rack).

Copyright 2014 National Fire Protection Association (NFPA). Licensed, by agreement, for individual use and download on October 4, 2014 to LEADER and READER for designated user PATTARAPORN SRITRAKOOL. No other reproduction or transmission in any form permitted without written permission of NFPA. For inquires or to report unauthorized use, contact licensing@nfpa.org.

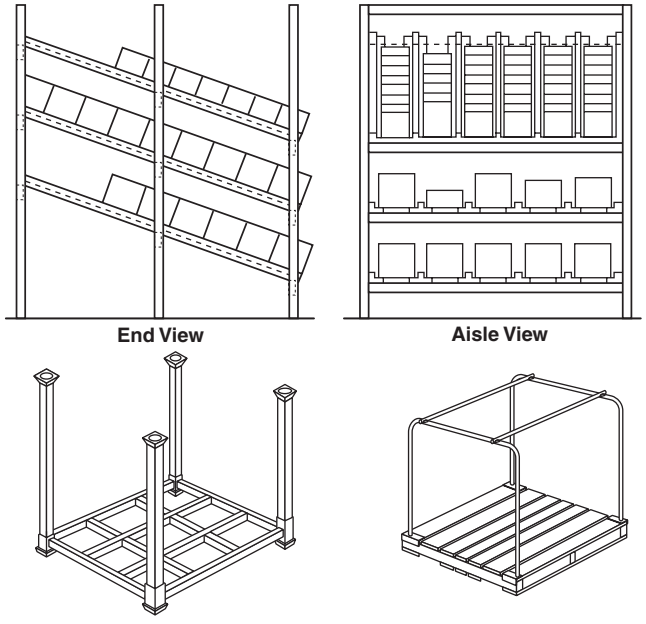

FIGURE A.3.9.3.7(i) Flow-Through Racks (Top) and Portable Racks (Bottom).

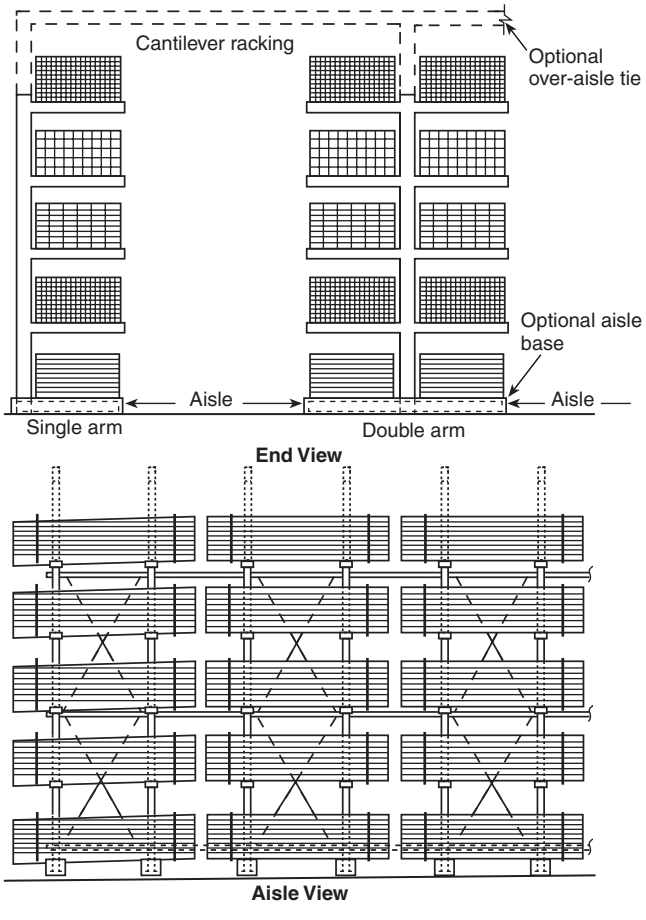

FIGURE A.3.9.3.7(j) Cantilever Rack.

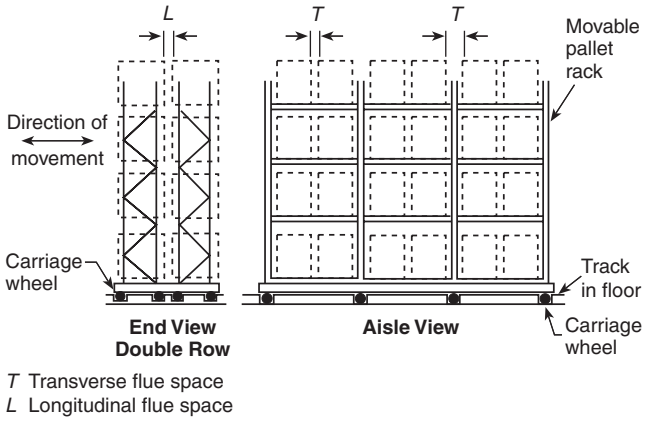

FIGURE A.3.9.3.7(k) Movable Rack.

A.3.9.4.4 Miscellaneous Tire Storage. The limitations on the type and size of storage are intended to identify those situations where tire storage is present in limited quantities and incidental to the main use of the building. Occupancies such as aircraft hangars, automobile dealers, repair garages, retail storage facilities, automotive and truck assembly plants, and mobile home assembly plants are types of facilities where miscellaneous storage could be present.

A.3.9.4.9 Rubber Tire Rack Illustrations. Figure A.3.9.4.9(a) through Figure A.3.9.4.9(g) do not necessarily cover all possible rubber tire storage configurations.

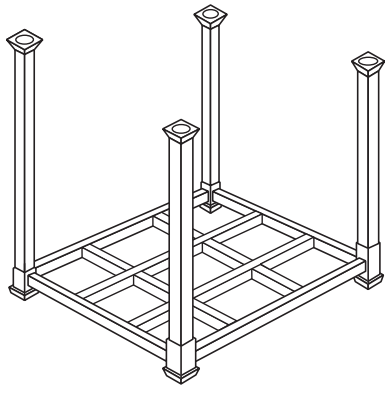

FIGURE A.3.9.4.9(a) Typical Open Portable Tire Rack Unit.

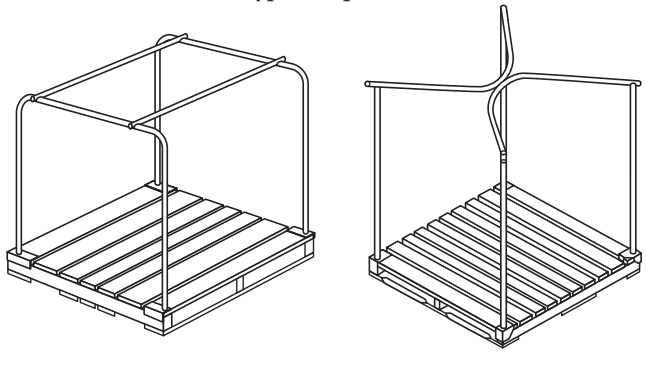

FIGURE A.3.9.4.9(b) Typical Palletized Portable Tire Rack Units.

Copyright 2014 National Fire Protection Association (NFPA). Licensed, by agreement, for individual use and download on October 4, 2014 to LEADER and READER for designated user PATTARAPORN SRITRAKOOL. No other reproduction or transmission in any form permitted without written permission of NFPA. For inquires or to report unauthorized use, contact licensing@nfpa.org.

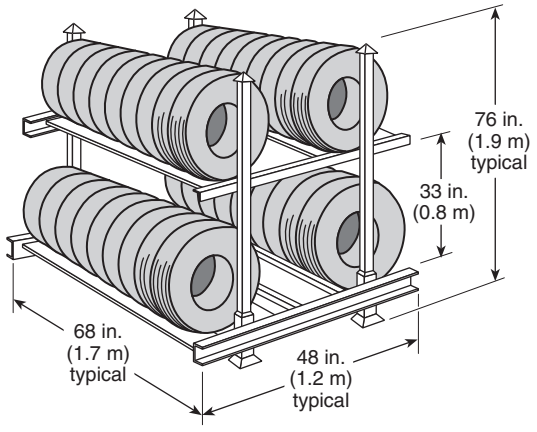

FIGURE A.3.9.4.9(c) Open Portable Tire Rack.

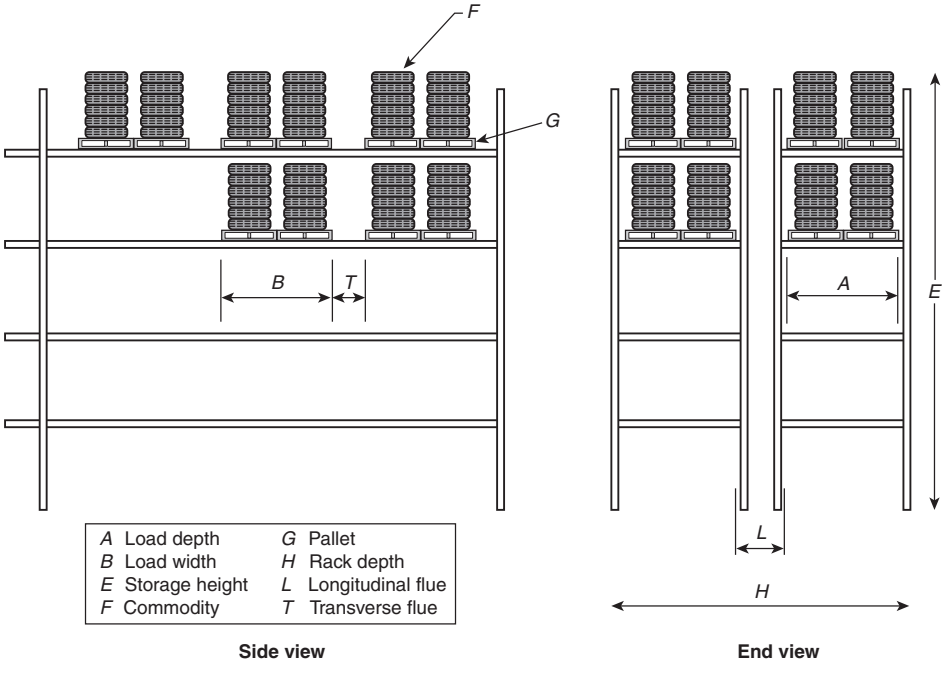

FIGURE A.3.9.4.9(d) Double-Row Fixed Tire Rack Storage.

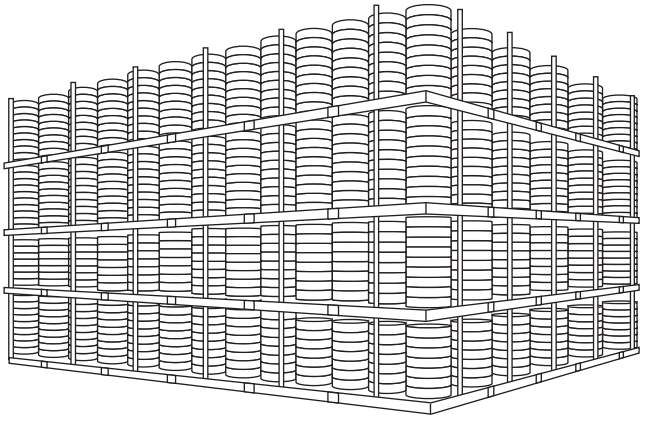

FIGURE A.3.9.4.9(e) Palletized Portable Tire Rack, On-Side Storage Arrangement (Banded or Unbanded).

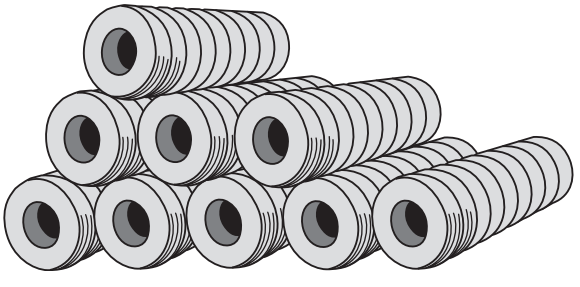

FIGURE A.3.9.4.9(f) On-Floor Storage; On-Tread, Normally Banded.

A.3.9.5.1.3 Standard Array (Paper). The occasional presence of partially used rolls on top of columns of otherwise uniform diameter rolls does not appreciably affect the burning characteristics.

A.3.9.5.6.3 Wrapped Roll Paper Storage. Rolls that are completely protected with a heavyweight kraft wrapper on both sides and ends are subject to a reduced degree of fire hazard. Standard methods for wrapping and capping rolls are outlined in Figure A.3.9.5.6.3.

In some cases, rolls are protected with laminated wrappers, using two sheets of heavy kraft with a high-temperature wax laminate between the sheets. Where using this method, the overall weight of wax-laminated wrappers should be based on the basis weight per 1000 ft^2 (92.9 m^2) of the outer sheet only, rather than on the combined basis weight of the outer and inner laminated wrapper sheets. A properly applied wrapper

Copyright 2014 National Fire Protection Association (NFPA). Licensed, by agreement, for individual use and download on October 4, 2014 to LEADER and READER for designated user PATTARAPORN SRITRAKOOL. No other reproduction or transmission in any form permitted without written permission of NFPA. For inquires or to report unauthorized use, contact licensing@nfpa.org.

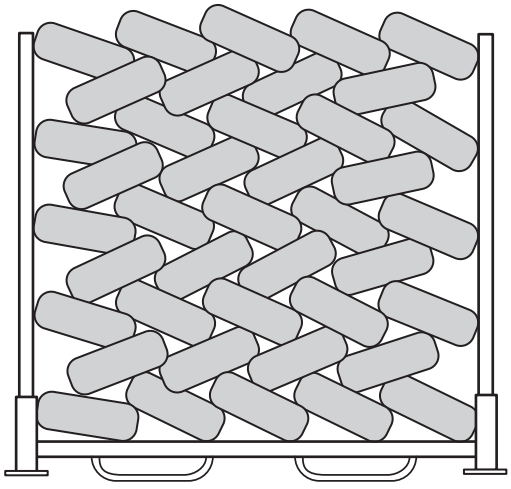

FIGURE A.3.9.4.9(g) Typical Laced Tire Storage.

can have the effect of changing the class of a given paper to essentially that of the wrapper material. The effect of applying a wrapper to tissue has not been determined by test.

A.3.9.5.7 Roll Paper Storage Height. The size of rolls and limitations of mechanical handling equipment should be considered in determining maximum storage height.

A.3.9.6.1 Baled Cotton. See Table A.3.9.6.1.

A.3.9.6.2 Tiered Storage. Untiered storage limits storage to the height of one bale, on side or on end. Sprinkler protection designed on this basis would likely prohibit future tiering without redesign of the sprinkler system.

A.3.10.4 Heat-Sensitive Material. The backbone of the fire protection philosophy for U.S. flagged vessels and passenger vessels that trade internationally is limiting a fire to the compartment of origin by passive means. Materials that do not withstand a 1-hour fire exposure when tested in accordance with ASTM E 119, *Standard Test Methods for Fire Tests of Building Construction and Materials,* are considered "heat sensitive."

A.3.10.7 International Shore Connection. See Figure A.3.10.7.

A.3.10.8 Marine System. Some types of sprinkler systems can closely resemble marine systems, such as a system installed on a floating structure that has a permanent water supply connection to a public main. For these types of systems, judgment should be used in determining if certain aspects of Chapter 26 are applicable.

A.3.10.9 Marine Thermal Barrier. A marine thermal barrier is typically referred to as a B-15 boundary.

A.3.11.3 Four-Way Bracing. A sway brace assembly could include a lateral and longitudinal brace in combination.

A.3.11.8 Post-Installed Anchors. Examples of these are wedge or undercut anchors, or powder-driven studs.

A.3.11.10 Seismic Separation Assembly. Seismic separation assemblies include traditional assemblies as shown in Figure A.9.3.3(a) and seismic loops as shown in Figure A.9.3.3(b).

Wrapper	
Exterior wrapper Body wrapper	General term for protective wrapping of sides and ends on roll.
Body wrap	
Sleeve wrap Wrap — do not cap	Wrapper placed around circumference of roll. No heads or caps needed.
Heads	
Headers	Protection applied to the ends of the rolls (*A* and *B*). Heads do not lap over the end of the roll.
Inside heads	Protection applied to the ends of the rolls next to the roll itself (*B*). The wrapper of the rolls is crimped down over these heads.
Outside heads	Protection applied to the ends of the rolls on the outside (*A*). This head is applied after the wrapper is crimped.
Edge protectors	
Edge bands	Refers to extra padding to prevent damage to roll edges (*C*).
Overwrap	The distance the body wrap or wrapper overlaps itself (*D*).
Roll cap	A protective cover placed over the end of a roll. Edges of cap lap over the end of the roll and are secured to the sides of the roll.

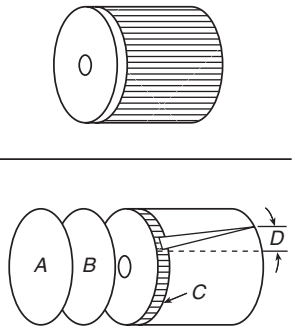

FIGURE A.3.9.5.6.3 Wrapping and Capping Terms and Methods.

A.4.3 A building constructed where the expected occupancy hazard and commodity classification of tenant uses are unknown at the time of the design and installation of the sprinkler system presents special problems due to unknown factors of future tenants and uses. The design of sprinkler systems for such buildings should be carefully reviewed with the owners, builders, leasing agents, and local authorities having jurisdiction prior to the selection of design criteria and installation of the system. Consideration should be given to the available height for storage, as well as the occupancy hazards of potential tenants and their likely storage needs.

The intent of Section 4.3 is to provide the owner's certificate for all new systems and where there is a change of occupancy and/or building use. *[See Figure A.23.1(b).]*

A.4.3(3) Recycled or reclaimed water used in a sprinkler system should not have contaminants in the water that are combustible or that will have a detrimental effect on the sprinkler system performance or the life of the sprinkler system.

Copyright 2014 National Fire Protection Association (NFPA). Licensed, by agreement, for individual use and download on October 4, 2014 to LEADER and READER for designated user PATTARAPORN SRITRAKOOL. No other reproduction or transmission in any form permitted without written permission of NFPA. For inquires or to report unauthorized use, contact licensing@nfpa.org.

Table A.3.9.6.1 Typical Cotton Bale Types and Approximate Sizes

	Dimensions		Average Weight		Volume		Density	
Bale Type	**in.**	**mm**	**lb**	**kg**	**ft^3**	**m^3**	**lb/ft^3**	**kg/m^3**
Compressed, standard	57 × 29 × 23	1448 × 736 × 584	500	226.8	22.0	0.62	22.7	366
Gin, standard	55 × 31 × 21	1397 × 787 × 533	500	226.8	20.7	0.58	24.2	391
Compressed, universal	58 × 25 × 21	1475 × 635 × 533	500	226.8	17.6	0.50	28.4	454
Gin, universal	55 × 26 × 21	1397 × 660 × 533	500	226.8	17.4	0.49	28.7	463
Compressed, high density	58 × 22 × 21	1473 × 559 × 533	500	226.8	15.5	0.44	32.2	515
Densely packed baled cotton	55 × 21 × 27.6 to 35.4	1400 × 530 × 700 to 900	500	226.8	21.1	0.60	22.0	360

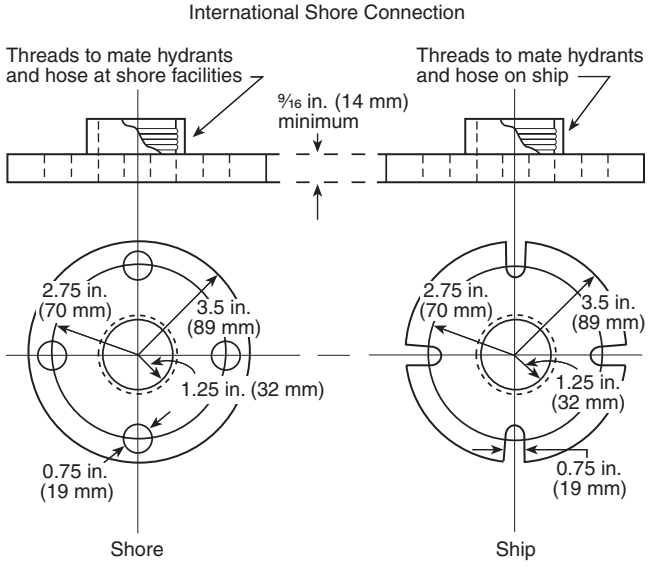

FIGURE A.3.10.7 International Shore Fire Connection.

A.4.4 Biocides and other chemicals that are approved and used for the prevention and mitigation of MIC and that do not adversely affect the fire-fighting properties of the water or the performance of the fire sprinkler system components are not prohibited.

A.4.6 Non-system components can adversely affect the operation and longevity of the fire sprinkler system. Objects connected to the sprinkler system can displace sprinkler system piping, causing obstruction to the spray pattern of sprinklers, delay the activation of a sprinkler, or cause chemical compatibility problems that can cause the failure of sprinkler system components.

A.5.1 Occupancy examples in the listings as shown in the various hazard classifications are intended to represent the norm for those occupancy types. Unusual or abnormal fuel loadings or combustible characteristics and susceptibility for changes in these characteristics, for a particular occupancy, are considerations that should be weighed in the selection and classification.

The light hazard classification is intended to encompass residential occupancies; however, this is not intended to preclude the use of listed residential sprinklers in residential occupancies or residential portions of other occupancies.

A.5.2 Light hazard occupancies include occupancies having uses and conditions similar to the following:

(1) Animal shelters
(2) Churches
(3) Clubs
(4) Eaves and overhangs, if of combustible construction with no combustibles beneath
(5) Educational
(6) Hospitals, including animal hospitals and veterinary facilities
(7) Institutional
(8) Kennels
(9) Libraries, except large stack rooms
(10) Museums
(11) Nursing or convalescent homes
(12) Offices, including data processing
(13) Residential
(14) Restaurant seating areas
(15) Theaters and auditoriums, excluding stages and proscenium
(16) Unused attics

Note that it is not the committee's intent to automatically equate library bookshelves with ordinary hazard occupancies or with library stacks. Typical library bookshelves of approximately 8 ft (2.4 m) in height, containing books stored vertically on end, held in place in close association with each other, with aisles wider than 30 in. (762 mm) can be considered to be light hazard occupancies. Similarly, library stack areas, which are more akin to shelf storage or record storage, as defined in NFPA 232, should be considered to be ordinary hazard occupancies.

Copyright 2014 National Fire Protection Association (NFPA). Licensed, by agreement, for individual use and download on October 4, 2014 to LEADER and READER for designated user PATTARAPORN SRITRAKOOL. No other reproduction or transmission in any form permitted without written permission of NFPA. For inquires or to report unauthorized use, contact licensing@nfpa.org.

A.5.3 For purposes of these definitions, Class I, Class II, Class III, and Class IV commodities would be considered to have moderate rates of heat release, while Group A plastics would be considered to have high rates of heat release. Stockpiles are considered to include display merchandise (mercantile) and arrangements of combustibles ancillary to operations within the occupancy as opposed to dedicated storage areas where the fire loading is generally more severe.

A.5.3.1 Ordinary hazard (Group 1) occupancies include occupancies having uses and conditions similar to the following:

(1) Automobile parking and showrooms
(2) Bakeries
(3) Beverage manufacturing
(4) Canneries
(5) Dairy products manufacturing and processing
(6) Electronic plants
(7) Glass and glass products manufacturing
(8) Laundries
(9) Restaurant service areas

A.5.3.2 Ordinary hazard (Group 2) occupancies include occupancies having uses and conditions similar to the following:

(1) Agricultural facilities
(2) Barns and stables
(3) Cereal mills
(4) Chemical plants — ordinary
(5) Confectionery products
(6) Distilleries
(7) Dry cleaners
(8) Exterior loading docks (Note that exterior loading docks only used for loading and unloading of ordinary combustibles should be classified as OH2. For the handling of flammable and combustible liquids, hazardous materials, or where utilized for storage, exterior loading docks and all interior loading docks should be protected based upon the actual occupancy and the materials handled on the dock, as if the materials were actually stored in that configuration.)
(9) Feed mills
(10) Horse stables
(11) Leather goods manufacturing
(12) Libraries — large stack room areas
(13) Machine shops
(14) Metal working
(15) Mercantile
(16) Paper and pulp mills
(17) Paper process plants
(18) Piers and wharves
(19) Plastics fabrication, including blow molding, extruding, and machining; excluding operations using combustible hydraulic fluids
(20) Post offices
(21) Printing and publishing
(22) Racetrack stable/kennel areas, including those stable/kennel areas, barns, and associated buildings at state, county, and local fairgrounds
(23) Repair garages
(24) Resin application area
(25) Stages
(26) Textile manufacturing
(27) Tire manufacturing
(28) Tobacco products manufacturing
(29) Wood machining
(30) Wood product assembly

A.5.4.1 Extra hazard (Group 1) occupancies include occupancies having uses and conditions similar to the following:

(1) Aircraft hangars (except as governed by NFPA 409)
(2) Combustible hydraulic fluid use areas
(3) Die casting
(4) Metal extruding
(5) Plywood and particleboard manufacturing
(6) Printing [using inks having flash points below 100°F (38°C)]
(7) Rubber reclaiming, compounding, drying, milling, vulcanizing
(8) Saw mills
(9) Textile picking, opening, blending, garnetting, or carding, combining of cotton, synthetics, wool shoddy, or burlap
(10) Upholstering with plastic foams

A.5.4.2 Extra hazard (Group 2) occupancies include occupancies having uses and conditions similar to the following:

(1) Asphalt saturating
(2) Flammable liquids spraying
(3) Flow coating
(4) Manufactured home or modular building assemblies (where finished enclosure is present and has combustible interiors)
(5) Open oil quenching
(6) Plastics manufacturing
(7) Solvent cleaning
(8) Varnish and paint dipping

A.5.5 Other NFPA standards contain design criteria for fire control or fire suppression *(see Section 5.5 and Chapter 2)*. While these can form the basis of design criteria, this standard describes the methods of design, installation, fabrication, calculation, and evaluation of water supplies that should be used for the specific design of the system.

Other NFPA standards contain sprinkler system design criteria for fire control or suppression of specific hazards. This information has been either referenced or copied into Chapter 22 using NFPA's extract policy.

A.5.6 Specification of the type, amount, and arrangement of combustibles for any commodity classification is essentially an attempt to define the potential fire severity, based on its burning characteristics, so the fire can be successfully controlled by the prescribed sprinkler protection for the commodity class. In actual storage situations, however, many storage arrays do not fit precisely into one of the fundamental classifications; therefore, the user needs to make judgments after comparing each classification to the existing storage conditions. Storage arrays consist of thousands of products, which make it impossible to specify all the acceptable variations for any class. As an alternative, a variety of common products are classified in this annex based on judgment, loss experience, and fire test results.

Table A.5.6 provides examples of commodities not addressed by the classifications in Section 5.6.

Table A.5.6.3 is an alphabetized list of commodities with corresponding classifications.

Table A.5.6.3.1 through Table A.5.6.3.4 and Table A.5.6.4.1 provide examples of commodities within a specific class.

A.5.6.1.1 Commodity classification is governed by the types and amounts of materials (e.g., metal, paper, wood, plastics) that are a part of a product and its primary packaging. However, in a storage or warehousing situation, classification is also affected by such factors as the primary storage or shipping container material, the amount of air space, and the location

Copyright 2014 National Fire Protection Association (NFPA). Licensed, by agreement, for individual use and download on October 4, 2014 to LEADER and READER for designated user PATTARAPORN SRITRAKOOL. No other reproduction or transmission in any form permitted without written permission of NFPA. For inquires or to report unauthorized use, contact licensing@nfpa.org.

Table A.5.6 Examples of Commodities Not Addressed by Classifications in Section 5.6

Boat Storage
- Stored on racks
Boxes, Crates
- Empty, wood slatted*
Lighters (butane)
- Loose in large containers (Level 3 aerosol)
Storage Container
- Large container storage of household goods

*Should be treated as idle pallets.

of the more hazardous materials within the container. For example, a Group A plastic product enclosed in a five- or six-sided metal container can be considered Class II, while a ceramic product heavily wrapped in tissue paper and placed in a corrugated carton could be Class III.

A.5.6.2.2 For example, Class III will become Class IV, and Class IV will become a cartoned unexpanded Group A plastic commodity.

A.5.6.2.3 For example, Class II will become Class IV, and Class III and Class IV will become a cartoned unexpanded Group A plastic commodity.

A.5.6.3 See Table A.5.6.3.

Table A.5.6.3 Alphabetized Listing of Commodity Classes

Commodity	Commodity Class
Aerosols	
Cartoned or uncartoned — Level 1	Class III
Alcoholic Beverages	
Cartoned or uncartoned	
- Up to 20 percent alcohol in metal, glass, or ceramic containers	Class I
- Up to 20 percent alcohol in wood containers	Class II
Ammunition	
Small arms, shotgun — packaged, cartoned	Class IV
Appliances, Major (e.g., stoves, refrigerators)	
- Not packaged, no appreciable plastic exterior trim	Class I
- Corrugated, cartoned (no appreciable plastic trim)	Class II
Baked Goods	
Cookies, cakes, pies	
- Frozen, packaged in cartons[a]	Class II
- Packaged, in cartons	Class III
Batteries	
Dry cells (nonlithium or similar exotic metals)	
- Packaged in cartons	Class I
- Blister-packed in cartons	Class II
Automobile — filled[b]	Class I
Truck or larger — empty or filled[b]	Group A plastics
Beans	
Dried — packaged, cartoned	Class III
Boat Storage	
- Stored in racks	See Table A.5.6
Bottles, Jars	
Empty, cartoned	
- Glass	Class I
- Plastic PET (polyethylene terephthalate)	Class IV
Filled noncombustible powders	
- Plastic PET	Class II
- Glass, cartoned	Class I
- Plastic, cartoned [less than 1 gal (3.8 L)]	Class IV
- Plastic, uncartoned (other than PET), any size	Group A plastics
- Plastic, cartoned or exposed [greater than 1 gal (3.8 L)]	Group A plastics
- Plastic, solid plastic crates	Group A plastics
- Plastic, open plastic crates	Group A plastics
Filled noncombustible liquids	
- Glass, cartoned	Class I
- Plastic, cartoned [less than 5 gal (18.9 L)]	Class I
- Plastic, open or solid plastic crates[c]	Group A plastics
- Plastic, PET	Class I
Boxes, Crates	
- Empty, wood, solid walls	Class II
- Empty, wood, slatted	See Table A.5.6
Bread	
Wrapped cartoned	Class III
Butter	
Whipped spread	Class III
Candles	
Packaged, cartoned	
- Treat as expanded plastic	Group A plastics
Candy	
Packaged, cartoned	Class III
Canned Foods	
In ordinary cartons	Class I
Cans	
Metal — empty	Class I
Carpet Tiles	
Cartoned	Group A plastics
Cartons	
Corrugated	
- Unassembled (neat piles)	Class III
- Partially assembled	Class IV
Wax coated, single walled	Group A plastics
Cement	
Bagged	Class I
Cereals	
Packaged, cartoned	Class III
Charcoal	
Bagged — standard	Class III
Cheese	
- Packaged, cartoned	Class III

Copyright 2014 National Fire Protection Association (NFPA). Licensed, by agreement, for individual use and download on October 4, 2014 to LEADER and READER for designated user PATTARAPORN SRITRAKOOL. No other reproduction or transmission in any form permitted without written permission of NFPA. For inquires or to report unauthorized use, contact licensing@nfpa.org.

Table A.5.6.3 *Continued*

Commodity	Commodity Class
- Wheels, cartoned	Class III
Chewing Gum	
Packaged, cartoned	Class III
Chocolate	
Packaged, cartoned	Class III
Cloth	
Cartoned and not cartoned	
- Natural fiber, viscose	Class III
- Synthetic[d]	Class IV
Cocoa Products	
Packaged, cartoned	Class III
Coffee	
- Canned, cartoned	Class I
- Packaged, cartoned	Class III
Coffee Beans	
Bagged	Class III
Cotton	
Packaged, cartoned	Class III
Diapers	
- Cotton, linen	Class III
- Disposable with plastics and nonwoven fabric (in cartons)	Class IV
- Disposable with plastics and nonwoven fabric (uncartoned), plastic wrapped	Group A plastics
Dried Foods	
Packaged, cartoned	Class III
Fertilizers	
Bagged	
- Phosphates	Class I
- Nitrates	Class II
Fiberglass Insulation	
- Paper-backed rolls, bagged or unbagged	Class IV
File Cabinets	
Metal	
- Cardboard box or shroud	Class I
Fish or Fish Products	
Frozen	
- Nonwaxed, nonplastic packaging	Class I
- Waxed-paper containers, cartoned	Class II
- Boxed or barreled	Class II
- Plastic trays, cartoned	Class III
Canned	
- Cartoned	Class I
Frozen Foods	
Nonwaxed, nonplastic packaging	Class I
- Waxed-paper containers, cartoned	Class II
- Plastic trays	Class III
Fruit	
Fresh	
- Nonplastic trays or containers	Class I
- With wood spacers	Class I
Furniture	
Wood	
- No plastic coverings or foam plastic cushioning	Class III
- With plastic coverings	Class IV
- With foam plastic cushioning	Group A plastics
Grains — Packaged in Cartons	
- Barley	Class III
- Rice	Class III
- Oats	Class III
Ice Cream	Class I
Leather Goods	Class III
Leather Hides	
Baled	Class II
Light Fixtures	
Nonplastic — cartoned	Class II
Lighters	
Butane	
- Blister-packed, cartoned	Group A plastics
- Loose and in large containers (Level 3 aerosol)	See Table A.5.6
Liquor	
100 proof or less, 1 gal (3.8 L) or less, cartoned	
- Glass (palletized)[e]	Class IV
- Plastic bottles	Class IV
Marble	
Artificial sinks, countertops	
- Cartoned, crated	Class II
Margarine	
- Up to 50 percent oil (in paper or plastic containers)	Class III
- Between 50 percent and 80 percent oil (in any packaging)	Group A plastics
Matches	
Packaged, cartoned	
- Paper	Class IV
- Wood	Group A plastics
Mattresses	
- Standard (box spring)	Class III
- Foam (in finished form)	Group A plastics
Meat, Meat Products	
- Bulk	Class I
- Canned, cartoned	Class I
- Frozen, nonwaxed, nonplastic containers	Class I
- Frozen, waxed-paper containers	Class II
- Frozen, expanded plastic trays	Class II
Metal Desks	
- With plastic tops and trim	Class I
Milk	
- Nonwaxed-paper containers	Class I
- Waxed-paper containers	Class I
- Plastic containers	Class I
- Containers in plastic crates	Group A plastics
Motors	
- Electric	Class I
Nail Polish	
- 1 oz to 2 oz (29.6 ml to 59.1 ml) glass, cartoned	Class IV
- 1 oz to 2 oz (29.6 ml to 59.1 ml) plastic bottles, cartoned	Group A plastics
Nuts	
- Canned, cartoned	Class I

(continues)

Copyright 2014 National Fire Protection Association (NFPA). Licensed, by agreement, for individual use and download on October 4, 2014 to LEADER and READER for designated user PATTARAPORN SRITRAKOOL. No other reproduction or transmission in any form permitted without written permission of NFPA. For inquires or to report unauthorized use, contact licensing@nfpa.org.

Table A.5.6.3 *Continued*

Commodity	Commodity Class
- Packaged, cartoned	Class III
- Bagged	Class III
Paints	
Friction-top cans, cartoned	
- Water-based (latex)	Class I
- Oil-based	Class IV
Paper Products	
- Books, magazines, stationery, plastic-coated paper food containers, newspapers, cardboard games, or cartoned tissue products	Class III
- Tissue products, uncartoned and plastic wrapped	Group A plastics
Paper, Rolled	
In racks or on side	Class III
- Medium- or heavyweight	
In racks	Class IV
- Lightweight	
Paper, Waxed	
Packaged in cartons	Class IV
Pharmaceuticals	
Pills, powders	
- Glass bottles, cartoned	Class II
- Plastic bottles, cartoned	Class IV
Nonflammable liquids	
- Glass bottles, cartoned	Class II
Photographic Film	
- Motion picture or bulk rolls of film in polycarbonate, polyethylene, or metal cans; polyethylene bagged in cardboard boxes	Class II
- 35 mm in metal film cartridges in polyethylene cans in cardboard boxes	Class III
- Paper, in sheets, bagged in polyethylene, in cardboard boxes	Class III
- Rolls in polycarbonate plastic cassettes, bulk wrapped in cardboard boxes	Class IV
Plastic Containers (except PET)	
- Noncombustible liquids or semiliquids in plastic containers less than 5 gal (18.9 L) capacity	Class I
- Noncombustible liquids or semiliquids (such as ketchup) in plastic containers with nominal wall thickness of ¼ in. (6.4 mm) or less and larger than 5 gal (18.9) capacity	Class II
- Noncombustible liquids or semiliquids (such as ketchup) in plastic containers with nominal wall thickness greater than ¼ in. (6.4 mm) and larger than 5 gal (18.9 L) capacity	Group A plastics

Table A.5.6.3 *Continued*

Commodity	Commodity Class
Polyurethane	
- Cartoned or uncartoned expanded	Group A plastics
Poultry Products	
- Canned, cartoned	Class I
- Frozen, nonwaxed, nonplastic containers	Class I
- Frozen (on paper or expanded plastic trays)	Class II
Powders	
Ordinary combustibles — free flowing	
- In paper bags (e.g., flour, sugar)	Class II
PVA (polyvinyl alcohol) Resins	
PVC (polyvinyl chloride)	
- Flexible (e.g., cable jackets, plasticized sheets)	Class III
- Rigid (e.g., pipe, pipe fittings)	Class III
- Bagged resins	Class III
Rags	
Baled	
- Natural fibers	Class III
- Synthetic fibers	Class IV
Rubber	
- Natural, blocks in cartons	Class IV
- Synthetic	Group A plastics
Salt	
- Bagged	Class I
- Packaged, cartoned	Class II
Shingles	
- Asphalt-coated fiberglass	Class III
- Asphalt-impregnated felt	Class IV
Shock Absorbers	
- Metal dust cover	Class II
- Plastic dust cover	Class III
Signatures	
Books, magazines	
- Solid array on pallet	Class II
Skis	
- Wood	Class III
- Foam core	Class IV
Stuffed Toys	
Foam or synthetic	Group A plastics
Storage Container	
- Large container storage of household goods	See Table A.5.6
Syrup	
- Drummed (metal containers)	Class I
- Barreled, wood	Class II
Textiles	
Natural fiber clothing or textile products	Class III
Synthetics (except rayon and nylon) — 50/50 blend or less	
- Thread, yarn on wood or paper spools	Class III
- Fabrics	Class III
- Thread, yarn on plastic spools	Class IV
- Baled fiber	Group A plastics

Copyright 2014 National Fire Protection Association (NFPA). Licensed, by agreement, for individual use and download on October 4, 2014 to LEADER and READER for designated user PATTARAPORN SRITRAKOOL. No other reproduction or transmission in any form permitted without written permission of NFPA. For inquires or to report unauthorized use, contact licensing@nfpa.org.

Table A.5.6.3 *Continued*

Commodity	Commodity Class
Synthetics (except rayon and nylon) — greater than 50/50 blend	
- Thread, yarn on wood or paper spools	Class IV
- Fabrics	Class IV
- Baled fiber	Group A plastics
- Thread, yarn on plastic spools	Group A plastics
Rayon and nylon	
- Baled fiber	Class IV
- Thread, yarn on wood or paper spools	Class IV
- Fabrics	Class IV
- Thread, yarn on plastic spools	Group A plastics
Tobacco Products	
In paperboard cartons	Class III
Transformers	
Dry and oil filled	Class I
Vinyl-Coated Fabric	
Cartoned	Group A plastics
Vinyl Floor Coverings	
- Tiles in cartons	Class IV
- Rolled	Group A plastics
Wax-Coated Paper	
Cups, plates	
- Boxed or packaged inside cartons (emphasis on packaging)	Class IV
- Loose inside large cartons	Group A plastics
Wax	
Paraffin/petroleum wax, blocks, cartoned	Group A plastics
Wire	
- Bare wire on metal spools on wood skids	Class I
- Bare wire on wood or cardboard spools on wood skids	Class II
- Bare wire on metal, wood, or cardboard spools in cardboard boxes on wood skids	Class II
- Single- or multiple-layer PVC-covered wire on metal spools on wood skids	Class II
- Insulated (PVC) cable on large wood or metal spools on wood skids	Class II
- Bare wire on plastic spools in cardboard boxes on wood skids	Class IV
- Single- or multiple-layer PVC-covered wire on plastic spools in cardboard boxes on wood skids	Class IV
- Single, multiple, or power cables (PVC) on large plastic spools	Class IV
- Bulk storage of empty plastic spools	Group A plastics
Wood Products	
- Solid piles — lumber, plywood, particleboard, pressboard (smooth ends and edges)	Class II
- Spools (empty)	Class III
- Toothpicks, clothespins, hangers in cartons	Class III
- Doors, windows, wood cabinets, and furniture	Class III
- Patterns	Class IV

[a] The product is presumed to be in a plastic-coated package in a corrugated carton. If packaged in a metal foil, it can be considered Class I.

[b] Most batteries have a polypropylene case and, if stored empty, should be treated as a Group A plastic. Truck batteries, even where filled, should be considered a Group A plastic because of their thicker walls.

[c] As the openings in plastic crates become larger, the product behaves more like a Class III commodity. Conversely, as the openings become smaller, the product behaves more like a plastic.

[d] Tests clearly indicate that a synthetic or synthetic blend is considered greater than Class III.

[e] When liquor is stored in glass containers in racks, it should be considered a Class III commodity; where it is palletized, it should be considered a Class IV commodity.

A.5.6.3.1 See Table A.5.6.3.1.

Table A.5.6.3.1 Examples of Class I Commodities

Alcoholic Beverages
Cartoned or uncartoned
- Up to 20 percent alcohol in metal, glass, or ceramic containers
Appliances, Major (e.g., stoves, refrigerators)
- Not packaged, no appreciable plastic exterior trim
Batteries
Dry cells (nonlithium or similar exotic metals)
- Packaged in cartons
Automobile
- Filled*
Bottles, Jars
Empty, cartoned
- Glass
Filled noncombustible liquids
- Glass, cartoned
- Plastic, cartoned [less than 5 gal (18.9 L)]
- Plastic, PET
Filled noncombustible powders
- Glass, cartoned
Canned Foods
In ordinary cartons
Cans
Metal
- Empty
Cement
Bagged
Coffee
Canned, cartoned

(continues)

Copyright 2014 National Fire Protection Association (NFPA). Licensed, by agreement, for individual use and download on October 4, 2014 to LEADER and READER for designated user PATTARAPORN SRITRAKOOL. No other reproduction or transmission in any form permitted without written permission of NFPA. For inquires or to report unauthorized use, contact licensing@nfpa.org.

Fertilizers
  Bagged
  - Phosphates
File Cabinets
  Metal
  - Cardboard box or shroud
Fish or Fish Products
  Frozen
  - Nonwaxed, nonplastic packaging
  Canned
  - Cartoned
Frozen Foods
  Nonwaxed, nonplastic packaging
Fruit
  Fresh
  - Nonplastic trays or containers
  - With wood spacers
Ice Cream
Meat, Meat Products
  - Bulk
  - Canned, cartoned
  - Frozen, nonwaxed, nonplastic containers
Metal Desks
  - With plastic tops and trim
Milk
  - Nonwaxed-paper containers
  - Waxed-paper containers
  - Plastic containers
Motors
  - Electric
Nuts
  - Canned, cartoned
Paints
  Friction-top cans, cartoned
  - Water-based (latex)
Plastic Containers
  - Noncombustible liquids or semiliquids in plastic containers less than 5 gal (18.9 L) capacity
Poultry Products
  - Canned, cartoned
  - Frozen, nonwaxed, nonplastic containers
Salt
  Bagged
Syrup
  Drummed (metal containers)
Transformers
  Dry and oil filled
Wire
  Bare wire on metal spools on wood skids

*Most batteries have a polypropylene case and, if stored empty, should be treated as a Group A plastic. Truck batteries, even where filled, should be considered a Group A plastic because of their thicker walls.

A.5.6.3.2 See Table A.5.6.3.2.

Table A.5.6.3.2 Examples of Class II Commodities

Alcoholic Beverages
  Up to 20 percent alcohol in wood containers
Appliances, Major (e.g., stoves)
  Corrugated, cartoned (no appreciable plastic trim)
Baked Goods
  Cookies, cakes, pies
  - Frozen, packaged in cartons*
Batteries
  Dry cells (nonlithium or similar exotic metals) in blister pack in cartons
Bottles, Jars
  Filled noncombustible powders
  - Plastic PET
Boxes, Crates
  Empty, wood, solid walls
Fertilizers
  Bagged
  - Nitrates
Fish or Fish Products
  Frozen
  - Waxed-paper containers, cartoned
  - Boxed or barreled
Frozen Foods
  Waxed-paper containers, cartoned
Leather Hides
  Baled
Light Fixtures
  Nonplastic
  - Cartoned
Marble
  Artificial sinks, countertops
  - Cartoned, crated
Meat, Meat Products
  - Frozen, waxed-paper containers
  - Frozen, expanded plastic trays
Pharmaceuticals
  Pills, powders
  - Glass bottles, cartoned
  Nonflammable liquids
  - Glass bottles, cartoned
Photographic Film
  - Motion picture or bulk rolls of film in polycarbonate, polyethylene, or metal cans; polyethylene bagged in cardboard boxes
Plastic Containers
  Noncombustible liquids or semiliquids (such as ketchup) in plastic containers with nominal wall thickness of ¼ in. (6.4 mm) or less and larger than 5 gal (18.9 L) capacity
Poultry Products
  Frozen (on paper or expanded plastic trays)
Powders (ordinary combustibles — free flowing)
  In paper bags (e.g., flour, sugar)
Salt
  Packaged, cartoned
Shock Absorbers
  Metal dust cover
Signatures
  Book, magazines
  - Solid array on pallet
Syrup
  Barreled, wood
Wire
  - Bare wire on wood or cardboard spools on wood skids
  - Bare wire on metal, wood, or cardboard spools in cardboard boxes on wood skids
  - Single- or multiple-layer PVC-covered wire on metal spools on wood skids

Copyright 2014 National Fire Protection Association (NFPA). Licensed, by agreement, for individual use and download on October 4, 2014 to LEADER and READER for designated user PATTARAPORN SRITRAKOOL. No other reproduction or transmission in any form permitted without written permission of NFPA. For inquires or to report unauthorized use, contact licensing@nfpa.org.

- Insulated (PVC) cable on large wood or metal spools on wood skids

Wood Products
Solid piles
- Lumber, plywood, particle board, pressboard (smooth ends and edges)

*The product is in a plastic-coated package in a corrugated carton. If packaged in a metal foil, it can be considered Class I.

A.5.6.3.3 See Table A.5.6.3.3.

Table A.5.6.3.3 Examples of Class III Commodities

Aerosols
Cartoned or uncartoned
- Level 1

Baked Goods
Cookies, cakes, pies
- Packaged, in cartons

Beans
Dried
- Packaged, cartoned

Bread
Wrapped, cartoned

Butter
Whipped spread

Candy
Packaged, cartoned

Cartons
Corrugated
- Unassembled (neat piles)

Cereals
Packaged, cartoned

Charcoal
Bagged
- Standard

Cheese
- Packaged, cartoned
- Wheels, cartoned

Chewing Gum
Packaged, cartoned

Chocolate
Packaged, cartoned

Cloth
Cartoned and not cartoned
- Natural fiber, viscose

Cocoa Products
Packaged, cartoned

Coffee
Packaged, cartoned

Coffee Beans
Bagged

Cotton
Packaged, cartoned

Diapers
Cotton, linen

Dried Foods
Packaged, cartoned

Fish or Fish Products
Frozen
- Plastic trays, cartoned

Frozen Foods
Plastic trays

Furniture
Wood
- No plastic coverings or foam plastic cushioning

Grains — Packaged in Cartons
- Barley
- Rice
- Oats

Margarine
Up to 50 percent oil (in paper or plastic containers)

Mattresses
Standard (box spring)

Nuts
- Packaged, cartoned
- Bagged

Paper Products
Books, magazines, stationery, plastic-coated paper food containers, newspapers, cardboard games, cartoned tissue products

Paper, Rolled
In racks or on side
- Medium- or heavyweight

Photographic Film
- 35 mm in metal film cartridges in polyethylene cans in cardboard boxes
- Paper, in sheets, bagged in polyethylene, in cardboard boxes

PVC (polyvinyl chloride)
- Flexible (e.g., cable jackets, plasticized sheets)
- Rigid (e.g., pipe, pipe fittings)
- Bagged resins

Rags
Baled
- Natural fibers

Shingles
Asphalt-coated fiberglass

Shock Absorbers
Plastic dust cover

Skis
Wood

Textiles
Natural fiber clothing or textile products
Synthetics (except rayon and nylon) — 50/50 blend or less
- Thread, yarn on wood or paper spools
- Fabrics

Tobacco Products
In paperboard cartons

Wood Products
- Spools (empty)
- Toothpicks, clothespins, hangers in cartons
- Doors, windows, wood cabinets, and furniture

Copyright 2014 National Fire Protection Association (NFPA). Licensed, by agreement, for individual use and download on October 4, 2014 to LEADER and READER for designated user PATTARAPORN SRITRAKOOL. No other reproduction or transmission in any form permitted without written permission of NFPA. For inquires or to report unauthorized use, contact licensing@nfpa.org.

A.5.6.3.4 See Table A.5.6.3.4.

Table A.5.6.3.4 Examples of Class IV Commodities

Ammunition
Small arms, shotgun
- Packaged, cartoned
Bottles, Jars
Empty, cartoned
- Plastic PET (polyethylene terephthalate)
Filled noncombustible powders
- Plastic, cartoned [less than 1 gal (3.8 L)]
Cartons
Corrugated
- Partially assembled
Cloth
Cartoned and not cartoned
- Synthetic[a]
Diapers
Disposable with plastics and nonwoven fabric (in cartons)
Fiberglass Insulation
- Paper-backed rolls, bagged or unbagged
Furniture
Wood
- With plastic coverings
Liquor
100 proof or less, 1 gal (3.8 L) or less, cartoned
- Glass (palletized)[b]
- Plastic bottles
Matches
Packaged, cartoned
- Paper
Nail Polish
1 oz to 2 oz (29.6 mL to 59.1 mL) glass, cartoned
Paints
Friction-top cans, cartoned
- Oil based
Paper, Rolled
In racks
- Lightweight
Paper, Waxed
Packaged in cartons
Pharmaceuticals
Pills, powders
- Plastic bottles, cartoned
Photographic Film
- Rolls in polycarbonate plastic cassettes, bulk wrapped in cardboard boxes
PVA (polyvinyl alcohol) Resins
Bagged
Rags
Baled
- Synthetic fibers
Rubber
Natural, blocks in cartons
Shingles
Asphalt-impregnated felt
Skis
Foam core
Textiles
Synthetics (except rayon and nylon) — 50/50 blend or less
- Thread, yarn on plastic spools
Synthetics (except rayon and nylon) — greater than 50/50 blend
- Thread, yarn on wood or paper spools
- Fabrics
Rayon and nylon
- Baled fiber
- Thread, yarn on wood or paper spools
- Fabrics
Vinyl Floor Coverings
Tiles in cartons
Wax-Coated Paper
Cups, plates
- Boxed or packaged inside cartons (emphasis is on packaging)
Wire
- Bare wire on plastic spools in cardboard boxes on wood skids
- Single- or multiple-layer PVC-covered wire on plastic spools in cardboard boxes on wood skids
- Single, multiple, or power cables (PVC) on large plastic spools
Wood Products
Patterns

[a] Tests clearly indicate that a synthetic or synthetic blend is considered greater than Class III.

[b] Where liquor is stored in glass containers in racks, it should be considered a Class III commodity; where it is palletized, it should be considered a Class IV commodity.

A.5.6.4 The categories listed in 5.6.4.1, 5.6.4.2, and 5.6.4.3 are based on unmodified plastic materials. The use of fire- or flame-retarding modifiers or the physical form of the material could change the classification.

A.5.6.4.1 See Table A.5.6.4.1.

Table A.5.6.4.1 Examples of Group A Plastic Commodities

Batteries
Truck or larger
- Empty or filled[a]
Bottles, Jars
Empty, cartoned
- Plastic (other than PET), any size
Filled noncombustible liquids
- Plastic, open or solid plastic crates[b]
Filled noncombustible powders
- Plastic, cartoned or uncartoned [greater than 1 gal (3.8 L)]
- Plastic, solid plastic crates
- Plastic, open plastic crates
Candles
Packaged, cartoned
- Treat as expanded plastic
Carpet Tiles
Cartoned
Cartons
Wax coated, single walled
Diapers
Disposable with plastics and nonwoven fabric (uncartoned), plastic wrapped

Copyright 2014 National Fire Protection Association (NFPA). Licensed, by agreement, for individual use and download on October 4, 2014 to LEADER and READER for designated user PATTARAPORN SRITRAKOOL. No other reproduction or transmission in any form permitted without written permission of NFPA. For inquires or to report unauthorized use, contact licensing@nfpa.org.

Furniture
Wood
- With foam plastic cushioning
Lighters
Butane
- Blister-packed, cartoned
Margarine
Between 50 percent and 80 percent oil (in any packaging)
Matches
Packaged, cartoned
- Wood
Mattresses
Foam (in finished form)
Milk
Containers in plastic crates
Nail Polish
1 oz to 2 oz (29.6 mL to 59.1 mL) plastic bottles, cartoned
Paper Products
Tissue products, uncartoned and plastic wrapped
Plastic Containers
- Combustible or noncombustible solids in plastic containers and empty plastic containers
- Noncombustible liquids or semiliquids (such as ketchup) in plastic containers with nominal wall thickness greater than ¼ in. (6.4 mm) and larger than 5 gal (18.9 L) capacity
Polyurethane
Cartoned or uncartoned expanded
Rubber
Synthetic
Stuffed Toys
Foam or synthetic
Textiles
Synthetics (except rayon and nylon) — 50/50 blend or less
- Baled fiber
Synthetics (except rayon and nylon) — greater than 50/50 blend
- Baled fiber
- Thread, yarn on plastic spools
Rayon and nylon
- Thread, yarn on plastic spools
Vinyl-Coated Fabric
Cartoned
Vinyl Floor Coverings
Rolled
Wax-Coated Paper
Cups, plates
- Loose inside large cartons
Wax
Paraffin/petroleum wax, blocks, cartoned
Wire
Bulk storage of empty plastic spools

[a] Most batteries have a polypropylene case and, if stored empty, should be treated as a Group A plastic. Truck batteries, even where filled, should be considered a Group A plastic because of their thicker walls.
[b] As the openings in plastic crates become larger, the product behaves more like Class III. Conversely, as the openings become smaller, the product makeup behaves more like a plastic.

A.5.6.5 *Paper Classification.* These classifications were derived from a series of large-scale and laboratory-type small-scale fire tests. It is recognized that not all paper in a class burns with exactly the same characteristics.

Paper can be soft or hard, thick or thin, or heavy or light and can also be coated with various materials. The broad range of papers can be classified according to various properties. One important property is basis weight, which is defined as the weight of a sheet of paper of a specified area. Two broad categories are recognized by industry — paper and paperboard. Paperboard normally has a basis weight of 20 lb (9.1 kg) or greater measured on a 1000 ft^2 (92.9 m^2) sheet. Stock with a basis weight less than 20 lb/1000 ft^2 (9.1 kg/92.9 m^2) is normally categorized as paper. The basis weight of paper is usually measured on a 3000 ft^2 (278.7 m^2) sheet. The basis weight of paper can also be measured on the total area of a ream of paper, which is normally the case for the following types of printing and writing papers:

(1) *Bond paper* — 500 sheets, 17 in. × 22 in. (432 mm × 559 mm) = 1300 ft^2 (120.8 m^2) per ream
(2) *Book paper* — 500 sheets, 25 in. × 38 in. (635 mm × 965 mm) = 3300 ft^2 (306.6 m^2) per ream
(3) *Index paper* — 500 sheets, 25½ in. × 30½ in. (648 mm × 775 mm) = 2700 ft^2 (250.8 m^2) per ream
(4) *Bristol paper* — 500 sheets, 22½ in. × 35 in. (572 mm × 889 mm) = 2734 ft^2 (254 m^2) per ream
(5) *Tag paper* — 500 sheets, 24 in. × 36 in. (610 mm × 914 mm) = 3000 ft^2 (278.7 m^2) per ream

For the purposes of this standard, all basis weights are expressed in lb/1000 ft^2 (kg/92.9 m^2) of paper. To determine the basis weight per 1000 ft^2 (92.9 m^2) for papers measured on a sheet of different area, the following formula should be applied:

$$\frac{\text{Base weight}}{1000\ \text{ft}^2} = \text{basis weight} \times 1000 \text{ measured area}$$

Example: To determine the basis weight per 1000 ft^2 (92.9 m^2) of 16 lb (7.3 kg) bond paper:

$$\left(\frac{16\ \text{lb}}{1300\ \text{ft}^2}\right)1000 = \frac{12.3\ \text{lb}}{1000\ \text{ft}^2}$$

Large- and small-scale fire tests indicate that the burning rate of paper varies with the basis weight. Heavyweight paper burns more slowly than lightweight paper. Full-scale roll paper fire tests were conducted with the following types of paper:

(1) *Linerboard* — 42 lb/1000 ft^2 (19.1 kg/92.9 m^2) nominal basis weight
(2) *Newsprint* — 10 lb/1000 ft^2 (4.5 kg/92.9 m^2) nominal basis weight
(3) *Tissue* — 5 lb/1000 ft^2 (2.3 kg/92.9 m^2) nominal basis weight

The rate of firespread over the surface of the tissue rolls was extremely rapid in the full-scale fire tests. The rate of firespread over the surface of the linerboard rolls was slower. Based on the overall results of these full-scale tests, along with additional data from small-scale testing of various paper grades, the broad range of papers has been classified into three major categories as follows:

(1) *Heavyweight* — Basis weight of 20 lb/1000 ft^2 (9.1 kg/92.9 m^2) or greater
(2) *Mediumweight* — Basis weight of 10 lb to 20 lb/1000 ft^2 (4.5 kg to 9.1 kg/92.9 m^2)
(3) *Lightweight* — Basis weight of less than 10 lb/1000 ft^2 (4.5 kg/92.9 m^2) and tissues regardless of basis weight

Copyright 2014 National Fire Protection Association (NFPA). Licensed, by agreement, for individual use and download on October 4, 2014 to LEADER and READER for designated user PATTARAPORN SRITRAKOOL. No other reproduction or transmission in any form permitted without written permission of NFPA. For inquires or to report unauthorized use, contact licensing@nfpa.org.

The following SI units were used for conversion of U.S. customary units:

1 lb = 0.454 kg

1 in. = 25.4 mm

1 ft = 0.3048 m

1 ft^2 = 0.0929 m^2

The various types of papers normally found in each of the four major categories are provided in Table A.5.6.5.

A.6.1.1 Included among items requiring listing are sprinklers, some pipe and some fittings, hangers, alarm devices, valves controlling flow of water to sprinklers, valve tamper switches, electrically operated solenoid valves, and gauges. Products are typically investigated in accordance with published standards. Examples of standards used to investigate several products installed in sprinkler systems are referenced in Table A.6.1.1. This table does not include a comprehensive list of all product standards used to investigate products installed in sprinkler systems.

A.6.2.2 The four- to six-character sprinkler identification number, with no intervening spaces, is intended to identify the sprinkler operating characteristics in lieu of the traditional laboratory approval marking (e.g., SSU, SSP, EC, QR, etc.). The number, marked on the deflector of most sprinklers and elsewhere on decorative ceiling sprinklers, consists of one or two characters identifying the manufacturer, followed by three or four digits.

Sprinkler manufacturers have identified their manufacturer designations for the listing organizations. In order to identify a manufacturer based on the Sprinkler Identification Number, see the listing at www.sprinklerworld.org. Each change in K-factor, response characteristics, or deflector (distribution) characteristics results in a new sprinkler identification number. The numbers do not identify specific characteristics of sprinklers but can be referenced in the database information compiled by the listing organizations. At the plan review stage, the sprinkler identification number should be checked against such a database or the manufacturer's literature to ensure that sprinklers are being used properly and within the limitations of their listings. Field inspections can include spot checks to ensure that the model numbers on the plans are those actually installed.

A.6.2.3.1 See Table A.6.2.3.1.

A.6.2.5 Information regarding the highest temperature that can be encountered in any location in a particular installation can be obtained by use of a thermometer that will register the highest temperature encountered; it should be hung for several days in the location in question, with the plant in operation.

A.6.2.6.1 Examples of such locations include the following:

(1) Paper mills
(2) Packing houses
(3) Tanneries
(4) Alkali plants
(5) Organic fertilizer plants
(6) Foundries
(7) Forge shops
(8) Fumigation, pickle, and vinegar works
(9) Stables
(10) Storage battery rooms
(11) Electroplating rooms
(12) Galvanizing rooms
(13) Steam rooms of all descriptions, including moist vapor dry kilns
(14) Salt storage rooms
(15) Locomotive sheds or houses
(16) Driveways
(17) Areas exposed to outside weather, such as piers and wharves exposed to salt air
(18) Areas under sidewalks
(19) Areas around bleaching equipment in flour mills
(20) All portions of cold storage buildings where a direct ammonia expansion system is used
(21) Portions of any plant where corrosive vapors prevail
(22) Area over and around swimming pools, chlorine storage rooms, and pool pump rooms

A.6.2.6.1.2 Care should be taken in the handling and installation of wax-coated or similar sprinklers to avoid damaging the coating.

A.6.2.6.2 Painting of sprinklers can retard the thermal response of the heat-responsive element, can interfere with the free movement of parts, and can render the sprinkler inoperative. Moreover, painting can invite the application of subsequent coatings, thus increasing the possibility of a malfunction of the sprinkler.

Table A.5.6.5 Paper Classification

Heavyweight	Mediumweight	Lightweight	Tissue
Linerboards	Bond and reproduction	Carbonizing tissue	Toilet tissue
Medium	Vellum	Cigarette	Towel tissue
Kraft roll wrappers	Offset	Fruit wrap	
Milk carton board	Tablet	Onion skin	
Folding carton board	Computer		
Bristol board	Envelope		
Tag	Book		
Vellum bristol board	Label		
Index	Magazine		
Cupstock	Butcher		
Pulp board	Bag		
	Newsprint (unwrapped)		

Copyright 2014 National Fire Protection Association (NFPA). Licensed, by agreement, for individual use and download on October 4, 2014 to LEADER and READER for designated user PATTARAPORN SRITRAKOOL. No other reproduction or transmission in any form permitted without written permission of NFPA. For inquires or to report unauthorized use, contact licensing@nfpa.org.

Table A.6.1.1 Examples of Standards for Sprinkler System Products

Category	Standard
Sprinklers	ANSI/UL 199, *Automatic Sprinklers for Fire Protection Service* FM 2000, *Automatic Control Mode Sprinklers for Fire Protection* ANSI/UL 1626, *Residential Sprinklers for Fire Protection Service* FM 2030, *Residential Automatic Sprinklers* ANSI/UL 1767, *Early-Suppression Fast-Response Sprinklers* FM 2008, *Suppression Mode ESFR Automatic Sprinklers* FM 1632, *Telescoping Sprinkler Assemblies for Use in Fire Protection Systems for Anechoic Chambers*
Valves	ANSI/UL 193, *Alarm Valves for Fire Protection Service* FM 1041, *Alarm Check Valves* ANSI/UL 260, *Dry Pipe and Deluge Valves for Fire Protection Service* FM 1021, *Dry Pipe Valves* FM 1020, *Automatic Water Control Valves* UL 262, *Gate Valves for Fire Protection Service* FM 1120, 1130, *Fire Service Water Control Valves (OS & Y and NRS Type Gate Valves)* ANSI/UL 312, *Check Valves for Fire Protection Service* FM 1210, *Swing Check Valves* UL 1091, *Butterfly Valves for Fire Protection Service* FM 1112, *Indicating Valves (Butterfly or Ball Type)* ANSI/UL 1468, *Direct Acting Pressure Reducing and Pressure Restricting Valves* ANSI/UL 1739, *Pilot-Operated Pressure-Control Valves for Fire Protection Service* FM 1362, *Pressure Reducing Valves* FM 1011/1012/1013, *Deluge and Preaction Sprinkler Systems* FM 1031, *Quick Opening Devices (Accelerators and Exhausters) for Dry Pipe Valves* FM 1042, *Waterflow Alarm Indicators (Vane Type)* FM 1045, *Waterflow Detector Check Valves* FM 1140, *Quick Opening Valves ¼ Inch Through 2 Inch Nominal Size*
Hangers	ANSI/UL 203, *Pipe Hanger Equipment for Fire Protection Service* FM 1951, 1952, 1953, *Pipe Hanger Components for Automatic Sprinkler Systems* FM 1950, *Seismic Sway Brace Components for Automatic Sprinkler Systems*
Fittings	ANSI/UL 213, *Rubber Gasketed Fittings for Fire Protection Service* FM 1920, *Pipe Couplings and Fittings for Fire Protection Systems* UL 1474, *Adjustable Drop Nipples for Sprinkler Systems* FM 1631, *Adjustable and Fixed Sprinkler Fittings ½ Inch through 1 Inch Nominal Size* ANSI/UL 2443, *Flexible Sprinkler Hose with Fittings for Fire Protection Service* FM 1637, *Flexible Sprinkler Hose with Fittings*
Pressure Gages	UL 393, *Indicating Pressure Gauges for Fire Protection Service* FM 2311, *Pressure Gauges for Fire Protection Systems*
Pipe — Aboveground	ANSI/UL 852, *Metallic Sprinkler Pipe for Fire Protection Service* FM 1630, *Steel Pipe for Automatic Fire Sprinkler Systems* ANSI/UL 1821, *Thermoplastic Sprinkler Pipe and Fittings for Fire Protection Service* FM 1635, *Plastic Pipe & Fittings for Automatic Sprinkler Systems* FM 1636, *Fire Resistant Barriers for Use with CPVC Pipe and Fittings in Light Hazard Occupancies*
Pipe — Underground	UL 1285, *Polyvinyl Chloride (PVC) Pipe and Couplings for Underground Fire Service* FM 1612, *Polyvinyl Chloride (PVC) Pipe and Fittings for Underground Fire Protection Service* FM 1613, *Polyethylene (PE) Pipe and Fittings for Underground Fire Protection Service* FM 1610, *Ductile Iron Pipe and Fittings, Flexible Fittings and Couplings* FM 1620, *Pipe Joints and Anchor Fittings for Underground Fire Service Mains*

Copyright 2014 National Fire Protection Association (NFPA). Licensed, by agreement, for individual use and download on October 4, 2014 to LEADER and READER for designated user PATTARAPORN SRITRAKOOL. No other reproduction or transmission in any form permitted without written permission of NFPA. For inquires or to report unauthorized use, contact licensing@nfpa.org.

Table A.6.2.3.1 Nominal Sprinkler Orifice Sizes

Nominal K-Factor		Nominal Orifice Size	
U.S. [gpm/(psi)$^{1/2}$]	Metric [L/min/(bar)$^{1/2}$]	in.	mm
1.4	20	¼	6.4
1.9	27	5/16	8.0
2.8	40	⅜	9.5
4.2	57	7/16	11.0
5.6	80	½	12.7
8.0	115	17/32	13.5
11.2	160	⅝	15.9
14.0	200	¾	19.0
16.8	240	—	—
19.6	280	—	—
22.4	320	—	—
25.2	360	—	—
28.0	400	—	—

A.6.2.6.4.2 Plastic bags should not be used for this purpose due to the fact that shrinkage prior to development of temperatures needed to ensure sprinkler activation can interfere with proper sprinkler operation and development of spray patterns. The prohibition against plastic bags should include polypropylene bags commonly marketed as "cello" bags. True cellophane degrades rather than melts and, like paper, does not display shrinkage.

A.6.2.7.2 The use of the wrong type of escutcheon with recessed or flush-type sprinklers can result in severe disruption of the spray pattern, which can destroy the effectiveness of the sprinkler.

A.6.2.9.1 A minimum of two sprinklers of each type and temperature rating should be provided.

A.6.2.9.6 One sprinkler wrench design can be appropriate for many types of sprinklers and should not require multiple wrenches of the same design.

A.6.2.9.7.1 The minimum information in the list contained in the spare sprinkler cabinet should be marked with the sprinkler identification described in 6.2.2; a general description of the sprinkler, including upright, pendent, residential, ESFR, and so forth; and the quantity of sprinklers that is to be maintained in the spare sprinkler cabinet.

An example of the list is shown in Figure A.6.2.9.7.1.

A.6.3.1.1.1 Extending the underground pipe into a building provides working room to transition to the appropriate aboveground piping. Environmental conditions should be considered as outlined in 24.1.6.1.2.

A.6.3.2 See Table A.6.3.2.

A.6.3.5 See Table A.6.3.5.

A.6.3.7 CPVC is a plastic material and consideration is necessary when other materials or chemicals come in contact with CPVC that can cause degradation of perfomance of the pipe due to interaction of materials. Compliance with 6.3.6 combined with following manufacturer's guidance on installation and compatible materials will help prevent premature performance degradation of CPVC piping. Excessive mechanical stress caused by hanging methods or excessive bending on CPVC piping beyond the recommended limitations can cause stress failure over time and should be avoided.

Sprinklers Contained in this Cabinet

Sprinkler Identification, SIN	General Description	Temperature Rating, °F	Sprinkler Quantity Maintained
TY9128	Extended Coverage, K-25, upright	155	6
VK425	Concealed pendent residential	145	6

Issued: 10/3/05 Revised:

FIGURE A.6.2.9.7.1 Sample List.

A.6.3.7.2 When fabricating steel pipe for a combination (CPVC–steel) system, the cutting oil and lubricants can cause performance degradation of the CPVC piping. Cutting oils and lubricants found to be compatible are available and should be used.

A.6.3.7.3 Other construction materials include but are not limited to materials used in fabrication of the sprinkler system, additives to water supplies, cable and wiring, and certain insecticides and fungicides.

A.6.3.7.8 Other types of pipe and tube that have been investigated and listed for sprinkler applications include lightweight steel pipe and thermoplastic pipe and fittings. While these products can offer advantages, such as ease of handling and installation, cost effectiveness, reduction of friction losses, and improved corrosion resistance, it is important to recognize that they also have limitations that are to be considered by those contemplating their use or acceptance.

Corrosion studies have shown that, in comparison to Schedule 40 pipe, the effective life of lightweight steel pipe can be reduced, the level of reduction being related to its wall thickness. Further information with respect to corrosion resistance is contained in the individual listings for such pipe.

With respect to thermoplastic pipe and fittings, exposure of such piping to elevated temperatures in excess of that for which it has been listed can result in distortion or failure. Accordingly, care must be exercised when locating such systems to ensure that the ambient temperature, including seasonal variations, does not exceed the rated value.

The upper service temperature limit of currently listed CPVC sprinkler pipe is 150°F (65.5°C) at 175 psi (12.1 bar).

Not all pipe or tube made to ASTM F 442, *Standard Specification for Chlorinated Poly (Vinyl Chloride) (CPVC) Plastic Pipe (SDR-PR)*, is listed for fire sprinkler service. Listed pipe is identified by the logo of the listing agency.

Not all fittings made to ASTM F 437, *Standard Specification for Threaded Chlorinated Poly (Vinyl Chloride) (CPVC) Plastic Pipe Fittings, Schedule 80*; ASTM F 438, *Standard Specification for Socket-Type Chlorinated Poly (Vinyl Chloride) (CPVC) Plastic Pipe Fittings, Schedule 40*; and ASTM F 439, *Standard Specification for Socket-Type Chlorinated Poly (Vinyl Chloride) (CPVC) Plastic Pipe Fittings, Schedule 80*, as described in 6.4.4, are listed for fire sprinkler service. Listed fittings are identified by the logo of the listing agency.

Copyright 2014 National Fire Protection Association (NFPA). Licensed, by agreement, for individual use and download on October 4, 2014 to LEADER and READER for designated user PATTARAPORN SRITRAKOOL. No other reproduction or transmission in any form permitted without written permission of NFPA. For inquires or to report unauthorized use, contact licensing@nfpa.org.

Table A.6.3.2 Steel Pipe Dimensions

Nominal Pipe Size		Outside Diameter		Schedule 5				Schedule 10[a]				Schedule 30				Schedule 40			
				Inside Diameter		Wall Thickness		Inside Diameter		Wall Thickness		Inside Diameter		Wall Thickness		Inside Diameter		Wall Thickness	
in.	mm	in.	mm	in.	mm	in.	mm	in.	mm	in.	mm	in.	mm	in.	mm	in.	mm	in.	mm
½[b]	15	0.840	21.3	—	—	—	—	0.674	17.0	0.083	2.1	—	—	—	—	0.622	15.8	0.109	2.8
¾[b]	20	1.050	26.7	—	—	—	—	0.884	22.4	0.083	2.1	—	—	—	—	0.824	21.0	0.113	2.9
1	25	1.315	33.4	1.185	30.1	0.065	1.7	1.097	27.9	0.109	2.8	—	—	—	—	1.049	26.6	0.133	3.4
1¼	32	1.660	42.2	1.530	38.9	0.065	1.7	1.442	36.6	0.109	2.8	—	—	—	—	1.380	35.1	0.140	3.6
1½	40	1.900	48.3	1.770	45.0	0.065	1.7	1.682	42.7	0.109	2.8	—	—	—	—	1.610	40.9	0.145	3.7
2	50	2.375	60.3	2.245	57.0	0.065	1.7	2.157	54.8	0.109	2.8	—	—	—	—	2.067	52.5	0.154	3.9
2½	65	2.875	73.0	2.709	68.8	0.083	2.1	2.635	66.9	0.120	3.0	—	—	—	—	2.469	62.7	0.203	5.2
3	80	3.500	88.9	3.334	84.7	0.083	2.1	3.260	82.8	0.120	3.0	—	—	—	—	3.068	77.9	0.216	5.5
3½	90	4.000	101.6	3.834	97.4	0.083	2.1	3.760	95.5	0.120	3.0	—	—	—	—	3.548	90.1	0.226	5.7
4	100	4.500	114.3	4.334	110.1	0.083	2.1	4.260	108.2	0.120	3.0	—	—	—	—	4.026	102.3	0.237	6.0
5	125	5.563	141.3	—	—	—	—	5.295	134.5	0.134	3.4	—	—	—	—	5.047	128.2	0.258	6.6
6	150	6.625	168.3	6.407	162.7	0.109	2.8	6.357	161.5	0.134[c]	3.4	—	—	—	—	6.065	154.1	0.280	7.1
8	200	8.625	219.1	—	—	—	—	8.249	209.5	0.188[c]	4.8	8.071	205.0	0.277[d]	7.0	7.981	—	0.322	—
10	250	10.750	273.1	—	—	—	—	10.370	263.4	0.188[c]	4.8	10.140	257.6	0.307[d]	7.8	10.020	—	0.365	—
12	300	12.750	—	—	—	—	—	—	—	—	—	12.090	—	0.330[c]	—	11.938	—	0.406	—

[a] Schedule 10 defined to 5 in. (127 mm) nominal pipe size by ASTM A 135, *Standard Specification for Electric-Resistance-Welded Steel Pipe.*
[b] These values applicable when used in conjunction with 8.14.19.3 and 8.14.19.4.
[c] Wall thickness specified in 6.3.2.
[d] Wall thickness specified in 6.3.3.

Table A.6.3.5 Copper Tube Dimensions

Nominal Tube Size		Outside Diameter		Type K				Type L				Type M			
				Inside Diameter		Wall Thickness		Inside Diameter		Wall Thickness		Inside Diameter		Wall Thickness	
in.	mm	in.	mm	in.	mm	in.	mm	in.	mm	in.	mm	in.	mm	in.	mm
¾	20	0.875	22.2	0.745	18.9	0.065	1.7	0.785	19.9	0.045	1.1	0.811	20.6	0.032	0.8
1	25	1.125	28.6	0.995	25.3	0.065	1.7	1.025	26.0	0.050	1.3	1.055	26.8	0.035	0.9
1¼	32	1.375	34.9	1.245	31.6	0.065	1.7	1.265	32.1	0.055	1.4	1.291	32.8	0.042	1.1
1½	40	1.625	41.3	1.481	37.6	0.072	1.8	1.505	38.2	0.060	1.5	1.527	38.8	0.049	1.2
2	50	2.125	54.0	1.959	49.8	0.083	2.1	1.985	50.4	0.070	1.8	2.009	51.0	0.058	1.5
2½	65	2.625	66.7	2.435	61.8	0.095	2.4	2.465	62.6	0.080	2.0	2.495	63.4	0.065	1.7
3	80	3.125	79.4	2.907	73.8	0.109	2.8	2.945	74.8	0.090	2.3	2.981	75.7	0.072	1.8
3½	90	3.625	92.1	3.385	86.0	0.120	3.0	3.425	87.0	0.100	2.5	3.459	87.9	0.083	2.1
4	100	4.125	104.8	3.857	98.0	0.134	3.4	3.905	99.2	0.110	2.8	3.935	99.9	0.095	2.4
5	125	5.125	130.2	4.805	122.0	0.160	4.1	4.875	123.8	0.125	3.2	4.907	124.6	0.109	2.8
6	150	6.125	155.6	5.741	145.8	0.192	4.9	5.845	148.5	0.140	3.6	5.881	149.4	0.122	3.1
8	200	8.125	206.4	7.583	192.6	0.271	6.9	7.725	196.2	0.200	5.1	7.785	197.7	0.170	4.3
10	250	10.130	257.3	9.449	240.0	0.338	8.6	9.625	244.5	0.250	6.4	9.701	246.4	0.212	5.4

Consideration must also be given to the possibility of exposure of the piping to elevated temperatures during a fire. The survival of thermoplastic piping under fire conditions is primarily due to the cooling effect of the discharge from the sprinklers it serves. As this discharge might not occur simultaneously with the rise in ambient temperature and, under some circumstances, can be delayed for periods beyond the tolerance of the piping, protection in the form of a fire-resistant membrane is generally required. (Some listings do provide for the use of exposed piping in conjunction with residential or quick-response sprinklers, but only under specific, limited installation criteria.)

Where protection is required, it is described in the listing information for each individual product, and the requirements given must be followed. It is equally important that such protection must be maintained. Removal of, for example, one or more panels in a lay-in ceiling can expose piping in the concealed space to the possibility of failure in the event of a fire. Similarly, the relocation of openings through protective ceilings that expose the pipe to heat, inconsistent with the listing, would place the system in jeopardy. The potential for loss of the protective membrane under earthquake conditions should also be considered.

Copyright 2014 National Fire Protection Association (NFPA). Licensed, by agreement, for individual use and download on October 4, 2014 to LEADER and READER for designated user PATTARAPORN SRITRAKOOL. No other reproduction or transmission in any form permitted without written permission of NFPA. For inquires or to report unauthorized use, contact licensing@nfpa.org.

While the listings of thermoplastic piping do not prohibit its installation in combustible concealed spaces where the provision of sprinkler protection is not required, and while the statistical record of fire originating in such spaces is low, it should be recognized that the occurrence of a fire in such a space could result in failure of the piping system.

The investigation of pipe and tube other than described in Table 6.3.1.1 should involve consideration of many factors, including the following:

(1) Pressure rating
(2) Beam strength (hangers)
(3) Unsupported vertical stability
(4) Movement during sprinkler operation (affecting water distribution)
(5) Corrosion (internal and external), chemical and electrolytic
(6) Resistance to failure when exposed to elevated temperatures
(7) Methods of joining (strength, permanence, fire hazard)
(8) Physical characteristics related to integrity during earthquakes

A.6.3.7.10.1 Where approved, the pipe identification can be covered with paint or other protective coatings before installation.

A.6.4.3.1 CPVC is a plastic material and consideration is necessary when other materials or chemicals come in contact with CPVC that can cause degradation of perfomance of the fitting due to interaction of materials. Compliance with 6.3.4 combined with following manufacturer's guidance on installation and compatible materials will help prevent premature performance degradation of CPVC fittings. Excessive mechanical stress caused by hanging methods or excessive bending on CPVC piping beyond the recommended limitations can cause stress failure over time and should be avoided.

A.6.4.3.2 When fabricating steel pipe for a combination (CPVC–steel) system, the cutting oil and lubricants can cause performance degradation of the CPVC fitting. Compatible cutting oils and lubricants are available and should be used.

A.6.4.4 Rubber-gasketed pipe fittings and couplings should not be installed where ambient temperatures can be expected to exceed 150°F (66°C) unless listed for this service. If the manufacturer further limits a given gasket compound, those recommendations should be followed.

Other construction materials include but are not limited to materials used in fabrication of the sprinkler system, additives to water supplies, cable and wiring, and certain insecticides and fungicides.

A.6.4.5 The rupture strength of cast-iron fittings 2 in. (51 mm) in size and smaller and malleable iron fittings 6 in. (152 mm) in size and smaller is sufficient to provide an adequate factor of safety.

A.6.4.6 Listed flexible connections are permissible and encouraged for sprinkler installations in racks to reduce the possibility of physical damage. Where flexible tubing is used, it should be located so that it will be protected against mechanical injury.

A.6.5.1.2 Some steel piping material having lesser wall thickness than specified in 6.5.1.2 has been listed for use in sprinkler systems where joined with threaded connections. The service life of such products can be significantly less than that of Schedule 40 steel pipe, and it should be determined if this service life will be sufficient for the application intended.

All such threads should be checked by the installer using working ring gauges conforming to the "Basic Dimensions of Ring Gauges for USA (American) Standard Taper Pipe Threads, NPT," as per Table 8 of ASME B1.20.1, *Pipe Threads, General Purpose (Inch)*.

A.6.5.2.2 Cutting and welding operations account for 4 percent of fires each year in nonresidential properties and 8 percent in industrial and manufacturing properties. In-place welding of sprinkler piping introduces a significant hazard that can normally be avoided by shop-welding the piping and installing the welded sections with mechanical fittings. As a result, the standard requires that all piping be shop-welded. When such situations cannot be avoided, the exceptions outline procedures and practices that minimize the increase in hazard.

A.6.5.2.3.1 Listed, shaped, and contoured nipples meet the definition of fabricated fittings.

A.6.5.2.4.1 Partial penetration welds on outlet fitting connections are considered adequate, since there is no significant load on the joint other than that caused by pressure internal to the pipe *(see Figure A.6.5.2.4.1)*.

A.6.5.2.4.2 The load due to the internal pressure can be accommodated with a weld that has a conservative weld throat thickness that can be calculated as follows:

$$\text{Weld throat thickness (in.)} = PD \times 0.000035$$

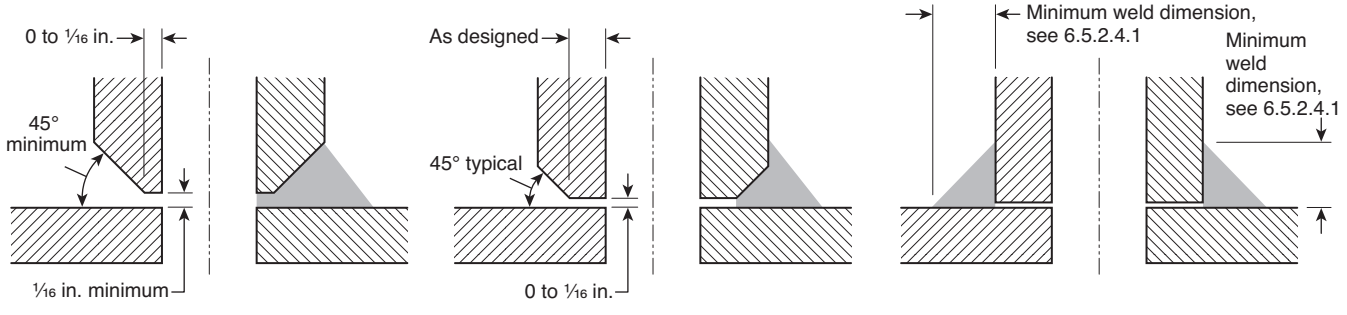

FIGURE A.6.5.2.4.1 Weld Descriptions.

Copyright 2014 National Fire Protection Association (NFPA). Licensed, by agreement, for individual use and download on October 4, 2014 to LEADER and READER for designated user PATTARAPORN SRITRAKOOL. No other reproduction or transmission in any form permitted without written permission of NFPA. For inquires or to report unauthorized use, contact licensing@nfpa.org.

where:
P = rated system gauge pressure (psi)
D = outside diameter (OD) of fitting (in.)

For example, if you assume a gauge pressure of 300 psi and the OD of the outlet fitting of 3 in., the result of the thickness calculation is 0.0315 in. When compared to the minimum throat thickness of 3⁄16 in. (0.18 in.), there is a factor of more than 5 times the calculated thickness value.

A.6.5.2.4.3 The preparation of mating surfaces is important to the proper fabrication of a weld joint. To accomplish this, the mating surfaces for a circumferential weld butt joint should be prepared and configured so that a full penetration weld is achievable, but a partial penetration weld is acceptable. *(See Figure A.6.5.2.4.3.)*

A.6.5.3.1 It is not the intent to require specific listing of every combination of grooved coupling, pipe, fitting, valve, and device, provided the standard groove dimensions as specified in ANSI/UL 213, *Rubber Gasketed Fittings for Fire Protection Service,* are used. Material strength and pressure rating of the fitting, valve, or device used with the grooved couplings should be considered when determining the appropriate application of a coupling when joining these components.

A.6.5.3.1.1 Standardized groove specifications pertain to the grooved couplings that comply with and the groove dimensions described in ANSI/UL 213, *Rubber Gasketed Fittings for Fire-Protection Service*. The standard dimensions are specified in ANSI/UL 213.

A.6.5.4 The fire hazard of the brazing and soldering processes should be suitably safeguarded.

A.6.5.4.5 Soldering fluxes manufactured to the specifications required by Table 6.3.1.1 are unlikely to cause damage to the seats of sprinklers. When brazing flux is used, it must be of a type not likely to damage the seats of sprinklers.

A.6.6 See Section 9.1 for information pertaining to the type of hangers and hanger components acceptable for use on a sprinkler system.

A.6.7.4 The intent of 6.7.4 is to provide assistance in determining the area of a building served by a particular control valve.

A.6.7.4.3.1 Care should be taken to ensure that all water supplies are isolated before work begins. Work on systems by shutting one valve and not knowing about another valve could result in unexpected water discharge.

A.6.8.1 The purpose of the fire department connection is to supplement the water supply but not necessarily provide the entire sprinkler system demand. Fire department connections are not intended to deliver a specific volume of water.

A.6.9.2.4 The surge of water that occurs when the valve trips can seriously damage the device. Paddle-type waterflow devices are also permitted to be installed on wet systems that supply auxiliary dry pipe and/or preaction systems.

A.6.9.3.1 Audible alarms are normally located on the outside of the building. Listed electric gongs, bells, horns, or sirens inside the building, or a combination of such used inside and outside, are sometimes advisable.

Outside alarms might not be necessary where the sprinkler system is used as part of a central station, auxiliary, remote station, or proprietary signaling fire alarm system, utilizing listed audible inside alarm devices.

A.6.9.3.2 All alarm apparatus should be so located and installed that all parts are accessible for inspection, removal, and repair, and such apparatus should be substantially supported.

The water motor gong bell mechanism should be protected from weather-related elements such as rain, snow, or ice. To the extent practicable, it should also be protected from other influencing factors such as birds or other small animals that might attempt to nest in such a device.

A.6.9.4 Switches that will silence electric alarm-sounding devices by interruption of electric current are not desirable; however, if such means are provided, then the electric alarm-sounding device circuit should be arranged so that, when the sounding device is electrically silenced, that fact should be indicated by means of a conspicuous light located in the vicinity of the riser or alarm control panel. This light should remain in operation during the entire period of the electric circuit interruption.

A.6.10 Table A.6.10 is a summary of the requirements for signs in NFPA 13.

A.7.2 A dry pipe system should be installed only where heat is not adequate to prevent freezing of water in all parts of, or in sections of, the system. Dry pipe systems should be converted to wet pipe systems when they become unnecessary because adequate heat is provided. Sprinklers should not be shut off in cold weather.

Where two or more dry pipe valves are used, systems preferably should be divided horizontally to prevent simultaneous operation of more than one system and the resultant increased time delay in filling systems and discharging water and to prevent receipt of more than one waterflow alarm signal.

Where adequate heat is present in sections of the dry pipe system, consideration should be given to dividing the system into a separate wet pipe system and dry pipe system. Minimized use of dry pipe systems is desirable where speed of operation is of particular concern.

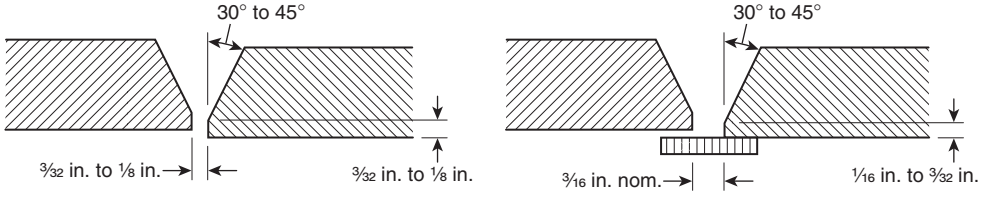

FIGURE A.6.5.2.4.3 Weld Diagram.

Copyright 2014 National Fire Protection Association (NFPA). Licensed, by agreement, for individual use and download on October 4, 2014 to LEADER and READER for designated user PATTARAPORN SRITRAKOOL. No other reproduction or transmission in any form permitted without written permission of NFPA. For inquires or to report unauthorized use, contact licensing@nfpa.org.

Table A.6.10 Sprinkler System Signage Summary

Section	Sign Location	Sign Information/Requirements
6.7.4	Control valves Drain valves Test connection valves	Identification sign Sign must be made of weatherproof metal or rigid plastic and attached with corrosion-resistant wire or chain
7.6.1.4 and 7.6.1.5	Antifreeze system main valve Circulating closed loop systems	Indicate the following: Antifreeze manufacturer Antifreeze type Antifreeze concentration
7.7.1.5	All valves controlling sprinklers	Sign worded as follows: "This valve controls fire protection equipment. Do not close until after fire has been extinguished. Use auxiliary valves when necessary to shut off supply to auxiliary equipment. Caution: Automatic alarm may be sounded if this valve is closed."
8.16.1.1.8	Control valves	Indicate valve function Indicate system being controlled
8.16.2.5.3.7	Dry valve Preaction valve	Number of low point drains Location of each drain
8.17.2.4.5	Fire department connections not serving the whole building	Indicate portion of the building served by the fire department connection
8.17.2.4.7	All fire department connections	Indicate systems served by the fire department connection Indicate system pressure demand (for systems requiring more than 150 psi) Letters must be 1 in. in height
24.5	Alarm valve Dry pipe valve Preaction valve Deluge valve	Indicate the following: Location of the design area or areas Discharge densities over the design area or areas Required flow and residual pressure demand at the base of the riser Occupancy classification or commodity classification and maximum permitted storage height and configuration Hose stream allowance The installing contractor Sign must be made of weatherproof metal or rigid plastic and attached with corrosion-resistant wire or chain
24.6	System control riser Antifreeze loops Auxiliary systems Control valves	Indicate the following: Name and location of the facility Occupancy and commodity classification Flow test data Original main drain flow test results Presence of encapsulated pallet loads Presence of solid shelving Presence of flammable/combustible liquids Presence of hazardous materials

Copyright 2014 National Fire Protection Association (NFPA). Licensed, by agreement, for individual use and download on October 4, 2014 to LEADER and READER for designated user PATTARAPORN SRITRAKOOL. No other reproduction or transmission in any form permitted without written permission of NFPA. For inquires or to report unauthorized use, contact licensing@nfpa.org.

Table A.6.10 *Continued*

Section	Sign Location	Sign Information/Requirements
		Presence of other special storage Presence of antifreeze or other auxiliary systems Maximum storage height Aisle width Location of auxiliary drains and low point drains on dry pipe and preaction systems Installing contractor or designer Sign must be made of weatherproof metal or rigid plastic and attached with corrosion-resistant wire or chain
26.2.7.5	Fire department connection (FDC)	18 in. × 18 in. sign FDC symbol from NFPA 170 Located at connection in plain sight from shore access point
A.18.17.1	Central station, auxiliary, remote station, or proprietary protective signaling systems	Recommended: Located near the device Direct people to call police or fire department when bell rings

A.7.2.2(2) Installation limitations of listed dry pendent sprinklers can vary with different products. Limitations should be included in product installation instructions to warn the user of the potential accumulation of water, scale, and sediment from collecting at the sprinkler.

A.7.2.3 The capacities of the various sizes of pipe given in Table A.7.2.3 are for convenience in calculating the capacity of a system.

A.7.2.3.1 The 60-second limit does not apply to dry systems with capacities of 500 gal (1893 L) or less, nor to dry systems with capacities of 750 gal (2839 L) or less if equipped with a quick-opening device.

A.7.2.3.7 See Figure A.7.2.3.7.

A.7.2.5 The dry pipe valve should be located in an accessible place near the sprinkler system it controls. Where exposed to cold, the dry pipe valve should be located in a valve room or enclosure of adequate size to properly service equipment.

A.7.2.5.1 The dry pipe valve and supply piping should be in an area maintained at or above 40°F (4°C). It is the intent of the committee to protect the valves from freezing. The occasional exposure of valves to short exposures of air temperatures below 40°F (4°C) that would not cause the valves to freeze does not justify the construction of a valve room.

A.7.2.6.3 The compressor should draw its air supply from within the operating criteria allowed by the manufacturer of the compressor. Air piping should not be attached to the intake of the compressor unless acceptable to the compressor manufacturer and installed in accordance with 7.9.2.7. Damage, air reduction, or reduced life expectancy can result if guidelines are not followed.

A.7.2.6.3.2 When a single compressor serves multiple dry pipe systems, the 30-minute fill time is based on the single largest system.

Table A.7.2.3 Capacity of 1 ft of Pipe (Based on Actual Internal Pipe Diameter)

Nominal Pipe Diameter		Pipe		Nominal Pipe Diameter		Pipe	
in.	mm	Schedule 40 (gal)	Schedule 10 (gal)	in.	mm	Schedule 40 (gal)	Schedule 10 (gal)
¾	20	0.028		3	80	0.383	0.433
1	25	0.045	0.049	3½	90	0.513	0.576
1¼	32	0.078	0.085	4	100	0.660	0.740
1½	40	0.106	0.115	5	125	1.040	1.144
2	50	0.174	0.190	6	150	1.501	1.649[b]
2½	65	0.248	0.283	8	200	2.66[a]	2.776[c]

For SI units, 1 in. = 25.4 mm; 1 ft = 0.3048 m; 1 gal = 3.785 L.
[a] Schedule 30.
[b] 0.134 wall pipe.
[c] 0.188 wall pipe.

Copyright 2014 National Fire Protection Association (NFPA). Licensed, by agreement, for individual use and download on October 4, 2014 to LEADER and READER for designated user PATTARAPORN SRITRAKOOL. No other reproduction or transmission in any form permitted without written permission of NFPA. For inquires or to report unauthorized use, contact licensing@nfpa.org.

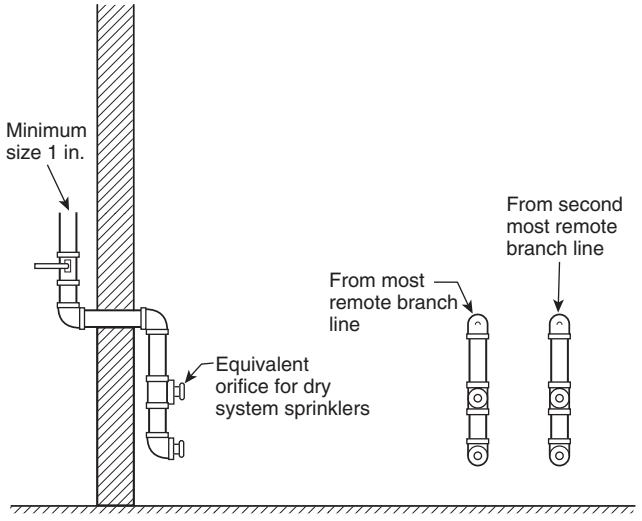

FIGURE A.7.2.3.7 Example Manifold Arrangement (Four Sprinklers).

A.7.2.6.6.1 Air maintenance devices are unique components within the air supply and need to be listed for use. Compressors are not air maintenance devices and this section does not require air compressors to be listed.

A.7.2.6.8.1 The nitrogen or other approved gas can be either generated on site or from storage containers, sized to provide a reliable supply for at least 6 months of expected maintenance use.

A.7.3.1 Conditions of occupancy or special hazards might require quick application of large quantities of water, and, in such cases, deluge systems might be needed.

Fire detection devices should be selected to ensure operation yet guard against premature operation of sprinklers based on normal room temperatures and draft conditions.

In locations where ambient temperature at the ceiling is high from heat sources other than fire conditions, heat-responsive devices that operate at higher than ordinary temperature and that are capable of withstanding the normal high temperature for long periods of time should be selected.

Where corrosive conditions exist, materials or protective coatings that resist corrosion should be used.

To help avoid ice formation in piping due to accidental tripping of dry pipe valves in cold storage rooms, a deluge automatic water control valve can be used on the supply side of the dry pipe valve. Where this method is employed, the following also apply:

(1) Dry systems can be manifolded to a deluge valve, with the protected area not exceeding 40,000 ft^2 (3716 m^2).
(2) Where a dry system is manifolded to a deluge valve, the distance between valves should be as short as possible to minimize water hammer.
(3) The dry pipe valves should be pressurized to 50 psi (3.4 bar) to reduce the possibility of dry pipe valve operation from water hammer.

A.7.3.1.1 When using electrical operating methods to actuate preaction systems and deluge systems, care should be observed in selecting the solenoid valve. This valve must be compatible with the fire detection system, including its control panel, and the preaction or deluge valve. This often involves listing with both the preaction or deluge valve manufacturer and the fire detection system manufacturer. Information regarding solenoid compatibility is included in the releasing device (panel) installation instructions.

Small preaction and deluge systems with and without separate electrical-based detection and control panels have been installed prior to the introduction of the detection system requirements of *NFPA 72*. Pneumatic-based actuation using heat-actuated devices (HADs), pneumatic line–type detection, and pilot sprinklers are examples of non-electric-based detectors and control devices. NFPA 13 recognizes the use and installation of these types of systems and provides guidance in producing a reliable detection and suppression system combination. Remote manual operation of combined dry pipe and preaction systems is needed because of the often very long length dimension of such systems and the long travel time to reach the control valves. Such remote manual operation speeds water into the piping network.

A.7.3.1.7.4 Preaction and deluge valves should be fully trip tested wherever possible. Providing a functional trip test without waterflow does not reveal other potential problems such as obstructions and/or misaligned nozzles.

A.7.3.2.3.1.4 Although the time criterion for calculated systems is not required, a test is still required to document the initial water delivery for comparison to future inspection test requirements. If the time of a single sprinkler test outlet exceeds 70 seconds, evaluation of the calculations and the system installation might be necessary.

A.7.3.2.4 Supervision, either electrical or mechanical, as used in 7.3.2.4 refers to constant monitoring of piping and detection equipment to ensure the integrity of the system. Detection devices of listed flow cycling assemblies that cause an alarm during a single open or a single ground fault condition should be considered to satisfy the supervision requirement.

A.7.3.2.5(2) See A.7.2.2(2).

A.7.3.3 Where 8 in. (203 mm) piping is employed to reduce friction losses in a system operated by fire detection devices, a 6 in. (152 mm) preaction or deluge valve and a 6 in. (152 mm) gate valve between tapered reducers should be permitted.

A.7.4.2 Systems described by Section 7.4 are special types of noninterlocking preaction systems intended for use in, but not limited to, structures where a number of dry pipe valves would be required if a dry pipe system were installed. These systems are primarily used in piers and wharves.

A.7.4.2.1 See Figure A.7.4.2.1.

A.7.4.2.4(2) See A.7.2.2(2).

A.7.4.3.2 Figure A.7.4.3.2 is a depiction of a valve arrangement complying with 7.4.3.2.

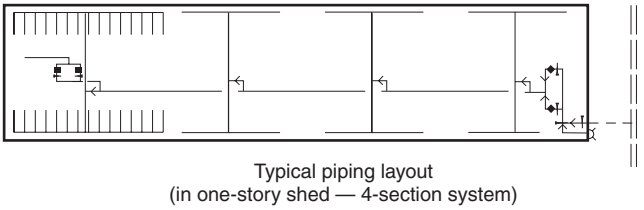

FIGURE A.7.4.2.1 Typical Piping Layout for Combined Dry Pipe and Preaction Sprinkler System.

Copyright 2014 National Fire Protection Association (NFPA). Licensed, by agreement, for individual use and download on October 4, 2014 to LEADER and READER for designated user PATTARAPORN SRITRAKOOL. No other reproduction or transmission in any form permitted without written permission of NFPA. For inquires or to report unauthorized use, contact licensing@nfpa.org.

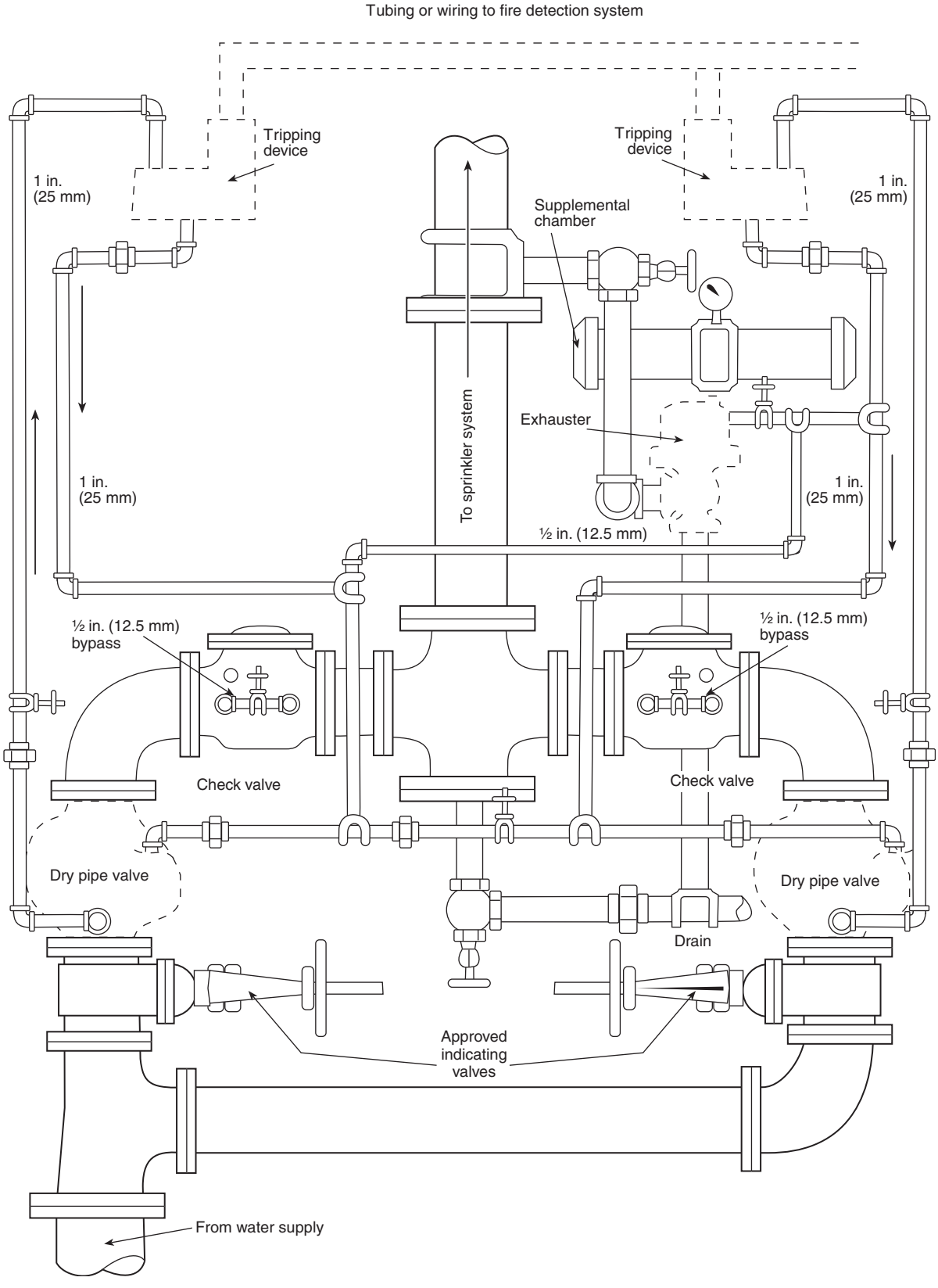

FIGURE A.7.4.3.2 Header for Dry Pipe Valves Installed in Parallel for Combined Systems; Standard Trimmings Not Shown. Arrows Indicate Direction of Fluid Flow.

Copyright 2014 National Fire Protection Association (NFPA). Licensed, by agreement, for individual use and download on October 4, 2014 to LEADER and READER for designated user PATTARAPORN SRITRAKOOL. No other reproduction or transmission in any form permitted without written permission of NFPA. For inquires or to report unauthorized use, contact licensing@nfpa.org.

A.7.6 In cold climates and areas where the potential for freezing of pipes is a concern, options other than antifreeze are available. Such options include installing the pipe in warm spaces, tenting insulation over the piping [as illustrated in Figure A.8.3.1(a) through Figure A.8.3.1(e) of NFPA 13D], listed heat tracing, and the use of dry pipe systems and preaction systems.

Annex paragraphs to Section 7.6 were revised by a tentative interim amendment (TIA). See page 1.

A.7.6.1 The definition of an antifreeze system states that water will discharge after the antifreeze leaves the pipes. Systems that are all antifreeze, including tanks of antifreeze solution that will not discharge plain water, are not true antifreeze systems. Such systems should not be used without consideration to issues such as the combustibility of the antifreeze solution and the friction loss in the piping during cold conditions. Any listing associated with an antifreeze sprinkler system should address the inability for the specific antifreeze solution tested to ignite when discharged from specific sprinklers.

A.7.6.2 Listed nonmetallic sprinkler pipe and fittings should be protected from freezing with compatible listed solutions only. In addition, due to antifreeze solution limitations, other methods of freeze protection such as electric heat tracing or insulated coverings, which are approved for use on nonmetallic piping, can be used to protect nonmetallic pipes from freezing.

The following is a list of research reports that have been issued by the Fire Protection Research Foundation (FPRF) related to the use of antifreeze in sprinkler systems:

(1) *Antifreeze Systems in Home Fire Sprinkler Systems — Literature Review and Research Plan*, Fire Protection Research Foundation, June 2010
(2) *Antifreeze Systems in Home Fire Sprinkler Systems — Phase II Final Report*, Fire Protection Research Foundation, December 2010
(3) *Antifreeze Solutions Supplied through Spray Sprinklers — Interim Report*, Fire Protection Research Foundation, February 2012

Table A.7.6.2 provides a summarized overview of the testing.

Table A.7.6.2 FPRF Antifreeze Testing Summary

Topic	Information
Scope of sprinklers tested	The following sprinklers were used during the residential sprinkler research program described in the report dated December 2010: (1) Residential pendent style having nominal K-factors of 3.1, 4.9, and 7.4 gpm/psi$^{1/2}$ (2) Residential concealed pendent style having a nominal K-factor of 4.9 gpm/psi$^{1/2}$ (3) Residential sidewall style having nominal K-factors of 4.2 and 5.5 gpm/psi$^{1/2}$
	The following sprinklers were used during the spray sprinkler research program described in the report dated February 2012: (1) Residential pendent style having a nominal K-factor of 3.1 gpm/psi$^{1/2}$ (2) Standard spray pendent style having nominal K-factors of 2.8, 4.2, 5.6, and 8.0 gpm/psi$^{1/2}$ (3) Standard spray concealed pendent style having a nominal K-factor of 5.6 gpm/psi$^{1/2}$ (4) Standard spray upright style having a nominal K-factor of 5.6 gpm/psi$^{1/2}$ (5) Standard spray extended coverage pendent style having a nominal K-factor of 5.6 gpm/psi$^{1/2}$
Antifreeze solution concentration	<50% glycerine and <40% propylene glycol antifreeze solutions: Solutions were not tested. 50% glycerine and 40% propylene glycol antifreeze solutions: Large-scale ignition of the sprinkler spray did not occur in tests with sprinkler discharge onto a fire having a nominal heat release rate (HRR) of 1.4 megawatts (MW). Large-scale ignition of sprinkler spray occurred in multiple tests with sprinkler discharge onto a fire having a nominal HRR of 3.0 MW. 55% glycerine and 45% propylene glycol antifreeze solutions: Large-scale ignition of the sprinkler spray occurred in tests with sprinkler discharge onto a fire having a nominal HRR of 1.4 MW. > 55% glycerine and > 45% propylene glycol antifreeze solutions: Large-scale ignition of the sprinkler spray occurred in tests with sprinkler discharge onto a fire having an HRR of less than 500 kW. 70% Glycerine and 60% propylene glycol antifreeze solutions: Maximum antifreeze solution concentrations tested.
Sprinkler inlet pressure	Large-scale ignition of the sprinkler discharge spray was not observed when the sprinkler inlet pressure was 50 psi or less for tests using 50% glycerine or 40% propylene glycol.
Ceiling height	When discharging 50% glycerine and 40% propylene glycol antifreeze solutions onto fires having an HRR of 1.4 MW, no large-scale ignition of the sprinkler spray was observed with ceiling heights up to 20 ft.

Copyright 2014 National Fire Protection Association (NFPA). Licensed, by agreement, for individual use and download on October 4, 2014 to LEADER and READER for designated user PATTARAPORN SRITRAKOOL. No other reproduction or transmission in any form permitted without written permission of NFPA. For inquires or to report unauthorized use, contact licensing@nfpa.org.

Table A.7.6.2 *Continued*

Topic	Information
	When discharging 50% glycerine and 40% propylene glycol antifreeze solutions onto fires having a HRR of 3.0 MW, large-scale ignition of the sprinkler spray was observed at a ceiling height of 20 ft.
Fire control	The test results described in the test reports dated December 2010 and February 2012 indicated that discharging glycerine and propylene glycol antifreeze solutions onto a fire can temporarily increase the fire size until water is discharged. As a part of the residential sprinkler research described in the report dated December 2010, tests were conducted to evaluate the effectiveness of residential sprinklers to control fires involving furniture and simulated furniture. The results of these tests indicated that 50% glycerine and 40% propylene glycol antifreeze solutions demonstrated the ability to control the furniture type fires in a manner similar to water. For standard spray type sprinklers, no tests were conducted to investigate the ability of these sprinklers to control the types and sizes of fires that these sprinklers are intended to protect.

A.7.6.2.1 Where existing antifreeze systems have been analyzed and approved to remain in service, antifreeze solutions should be limited to premixed antifreeze solutions of glycerine (chemically pure or United States Pharmacopoeia 96.5 percent) at a maximum concentration of 48 percent by volume, or propylene glycol at a maximum concentration of 38 percent by volume. The use of antifreeze solutions in all new sprinkler systems should be restricted to listed antifreeze solutions only. Where existing antifreeze systems are in service, the solution concentration should be limited to those noted in A.7.6.2.1, and the system requires an analysis and approval of the AHJ to remain in service.

A.7.6.3.2 One formula for sizing the chamber is as follows. Other methods also exist.

$$\Delta L = S_V\left(\frac{D_L}{D_H} - 1\right)$$

where:

ΔL = change in antifreeze solution volume (gal) due to thermal expansion
S_V = volume (gal) of antifreeze system, not including the expansion chamber
D_L = density (gm/mL) of antifreeze solution at lowest expected temperature
D_H = density (gm/mL) of antifreeze solution at highest expected temperature

This method is based on the following information:

$$\frac{P_0 \cdot V_0}{T_0} = \frac{P_1 \cdot V_1}{T_1} = \frac{P_2 \cdot V_2}{T_2}$$

where:

V_{EC} = minimum required volume (gal) of expansion chamber
V_0 = air volume (gal) in expansion chamber at precharge (before installation)
V_1 = air volume (gal) in expansion chamber at normal static pressure
V_2 = air volume (gal) in expansion chamber at post-expansion pressure (antifreeze at high temperature)
P_0 = absolute precharge pressure (psia) on expansion chamber before installation
P_1 = absolute static pressure (psi) on water (supply) side of backflow preventer
P_2 = absolute maximum allowable working pressure (psi) for antifreeze system
T_0 = temperature (°R) of air in expansion chamber at precharge
T_1 = temperature (°R) of air in expansion chamber when antifreeze system piping is at lowest expected temperature
T_2 = temperature (°R) of air in expansion chamber when antifreeze system piping is at highest expected temperature

This equation is one formulation of the ideal gas law from basic chemistry. The amount of air in the expansion chamber will not change over time. The pressure, temperature, and volume of the air at different times will be related in accordance with this formula:

$$V_2 = V_1 - \Delta L$$

The antifreeze in the system is essentially incompressible, so the air volume in the expansion chamber will decrease by an amount equal to the expansion of the antifreeze.

It is assumed that there is no trapped air in the system piping, so the only air in the system is in the expansion chamber. This is a conservative assumption, since more air is better. In reality, there will be at least some trapped air. However, only the air in the expansion chamber can be relied upon to be available when needed.

$$V_{EC} = V_0$$

At precharge, the chamber will be completely full of air.

$$V_{EC} = \frac{P_1 \cdot T_0 \cdot P_2 \cdot \Delta L \cdot T_1}{P_0 \cdot T_1\left(P_2 \cdot T_1 - P_1 \cdot T_2\right)}$$

In cases where the normal static pressure on the sprinkler system is close to the maximum working pressure, antifreeze systems are not advisable if the connection to the wet pipe system will incorporate a backflow device. In these cases, expansion of the antifreeze solution during warm weather will cause the antifreeze system to exceed the maximum working pressure, regardless of the size of the expansion chamber. The normal static pressure is too close to the maximum working pressure if the preceding formula for V_{EC} yields a negative result. If this occurs, use a dry pipe system instead or install a pressure-reducing valve before the backflow preventer.

A.7.6.3.3 The expansion chamber should be appropriately sized and precharged with air pressure.

Copyright 2014 National Fire Protection Association (NFPA). Licensed, by agreement, for individual use and download on October 4, 2014 to LEADER and READER for designated user PATTARAPORN SRITRAKOOL. No other reproduction or transmission in any form permitted without written permission of NFPA. For inquires or to report unauthorized use, contact licensing@nfpa.org.

A.7.6.3.6 Systems larger than 40 gal (151 L) are required by NFPA 25 to check the concentration levels at the supply inlet to the antifreeze system and at a remote point of the system.

A.7.7.1.2 Outlets should be provided at critical points on sprinkler system piping to accommodate attachment of pressure gauges for test purposes.

A.7.8.4.2.1 See Figure A.7.8.4.2.1.

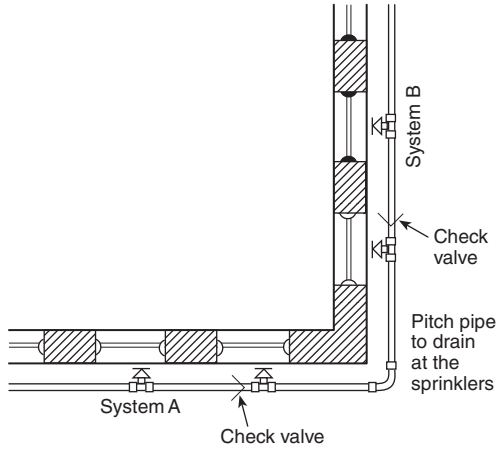

FIGURE A.7.8.4.2.1 Typical Arrangement of Check Valves.

A.7.8.4.2.3 See Figure A.7.8.4.2.3.

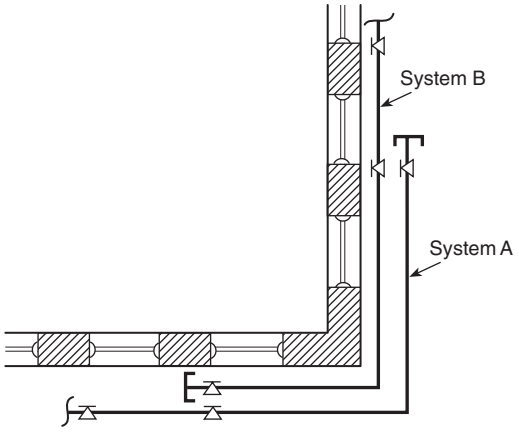

FIGURE A.7.8.4.2.3 Alternate Arrangement of Check Valves.

A.7.9 Careful installation and maintenance, and some special arrangements of piping and devices as outlined in this section, are needed to avoid the formation of ice and frost inside piping in cold storage rooms that will be maintained at or below 32°F (0°C). Conditions are particularly favorable to condensation where pipes enter cold rooms from rooms having temperatures above freezing.

Whenever the opportunity offers, fittings such as those specified in 7.9.2.1, as well as flushing connections, should be provided in existing systems.

Where possible, risers should be located in stair towers or other locations outside of refrigerated areas, which would reduce the probabilities of ice or frost formation within the riser (supply) pipe.

Cross mains should be connected to risers or feed mains with flanges. In general, flanged fittings should be installed at points that would allow easy dismantling of the system. Split ring or other easily removable types of hangers will facilitate the dismantling.

Because it is not practical to allow water to flow into sprinkler piping in spaces that might be constantly subject to freezing, or where temperatures must be maintained at or below 40°F (4.4°C), it is important that means be provided at the time of system installation to conduct trip tests on dry pipe valves that service such systems. NFPA 25 contains requirements in this matter.

A.7.9.2 The requirements in 7.9.2 are intended to minimize the chances of ice plug formation inside sprinkler system piping protecting freezers.

A.7.9.2.4 A higher degree of preventing the formation of ice blocks can be achieved by lowering the moisture of the air supply entering the refrigerated space to a pressure dew point no greater than 20°F (−6.6°C) below the lowest nominal temperature of the refrigerated space. The pressure dew point of the air supply can cause moisture to condense and freeze in sprinkler pipe even when the air supply is from the freezer. One method of reducing the moisture content of the air by use of air drying systems is illustrated in Figure A.7.9.2.4.

When compressors and dryers are used for an air supply, consideration should be given to pressure requirements of the regenerative dryers, compressor size, air pressure regulator capacity, and air fill rate. Application of these factors could necessitate the use of increased air pressures and a larger air compressor.

The compressed air supply should be properly prepared prior to entering a regenerative-type air dryer, such as minimum air pressure, maximum inlet air temperature, and proper filtration of compressed air.

A.7.9.2.5 A major factor contributing to the introduction of moisture into the system piping is excessive air compressor operation caused by system leakage. Where excessive compressor operation is noted or ice accumulates in the air supply piping, the system should be checked for leakage and appropriate corrective action should be taken.

A.7.9.2.6 The purpose of the check valve is to prevent evaporation of prime water into the system piping.

A.7.9.2.7 The dual lines feeding the system air entering the cold area are intended to facilitate continued service of the system when one line is removed for inspection. It should be noted that, when using a system as described in Figure A.7.9.2.4, differences in the pressures at gauge P1 and gauge P2 indicate blockage in the air supply line or other malfunctions.

A.7.9.2.8.1.1 While it is the intent to require the detection system to operate prior to sprinklers, it is possible that in some fire scenarios the sprinklers could operate prior to the detection system. In general, the detection system, at its installed location and spacing, should be more sensitive to fire than the sprinklers.

Copyright 2014 National Fire Protection Association (NFPA). Licensed, by agreement, for individual use and download on October 4, 2014 to LEADER and READER for designated user PATTARAPORN SRITRAKOOL. No other reproduction or transmission in any form permitted without written permission of NFPA. For inquires or to report unauthorized use, contact licensing@nfpa.org.

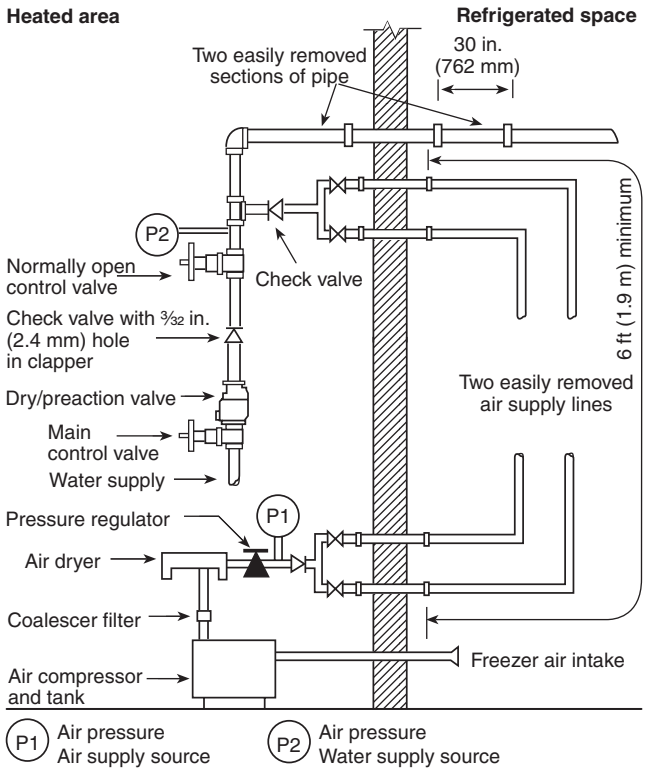

Notes:

1. If pressure gauge P1 and P2 do not indicate equal pressures, it could mean the air line is blocked or the air supply is malfunctioning.
2. Air dryer and coalescer filter not required when system piping capacity is less than 250 gal (946 L).

FIGURE A.7.9.2.4 Refrigerator Area Sprinkler Systems Used to Minimize Chances of Developing Ice Plugs.

A.7.10.2 See Figure A.7.10.2.

A.8.1 The installation requirements are specific for the normal arrangement of structural members. There will be arrangements of structural members not specifically detailed by the requirements. By applying the basic principles, layouts for such construction can vary from specific illustrations, provided the maximums specified for the spacing and location of sprinklers (*see Section 8.4*) are not exceeded.

Where buildings or portions of buildings are of combustible construction or contain combustible material, standard fire barriers should be provided to separate the areas that are sprinkler protected from adjoining unsprinklered areas. All openings should be protected in accordance with applicable standards, and no sprinkler piping should be placed in an unsprinklered area unless the area is permitted to be unsprinklered by this standard.

Water supplies for partial systems should be designed with consideration to the fact that in a partial system more sprinklers might be opened in a fire that originates in an unprotected area and spreads to the sprinklered area than would be the case in a completely protected building. Fire originating in a nonsprinklered area might overpower the partial sprinkler system.

Where sprinklers are installed in corridors only, sprinklers should be spaced up to the maximum of 15 ft (4.5 m) along the corridor, with one sprinkler opposite the center of any door or pair of adjacent doors opening onto the corridor, and with an additional sprinkler installed inside each adjacent room above the door opening. Where the sprinkler in the adjacent room provides full protection for that space, an additional sprinkler is not required in the corridor adjacent to the door.

A.8.1.1 This standard contemplates full sprinkler protection for all areas including walk-in coolers, freezers, bank vaults, and similar areas. Other NFPA standards that mandate sprinkler installation might not require sprinklers in certain areas. Based upon experience and testing, sprinklers have been found to be effective and necessary at heights in excess of 50 ft (15.2 m). For a building to meet the intended level of protection afforded by NFPA 13, sprinklers must not be omitted from such high ceiling spaces. The requirements of this standard should be used insofar as they are applicable. The authority having jurisdiction should be consulted in each case. A building is considered sprinklered throughout when protected in accordance with the requirements of this standard.

A.8.1.1(3) Notwithstanding the obstruction rules provided in Chapter 8, it is not intended or expected that water will fall on the entire floor space of the occupancy.

When obstructions or architectural features interfere with the sprinkler's spray pattern, such as columns, angled walls, wing walls, slightly indented walls, and various soffit configurations, shadowed areas can occur. Where small shadowed areas are formed on the floor adjacent to their referenced architectural features, these shadowed areas are purely on paper and do not take into account the dynamic variables of sprinkler discharge. Examples of shadow areas are shown in Figure A.8.1.1(3)(a) and Figure A.8.1.1(3)(b).

A.8.1.1(8) Equipment having access for routine maintenance should not be considered as intended for occupancy.

A.8.1.2 The components need not be open or exposed. Doors, removable panels, or valve pits can satisfy this need. Such equipment should not be obstructed by such permanent features as walls, ducts, columns, or direct burial.

A.8.2.1(3) Pipe schedule — 25,000 ft^2 (2323 m^2).

A.8.2.5 Buildings adjacent to a primary structure can be protected by extending the fire sprinkler system from the primary structure. This eliminates the need to provide a separate fire sprinkler system for small auxiliary buildings. Items that should be considered before finalizing fire sprinkler design should include the following:

(1) Actual physical distance between adjacent structures
(2) Potential for the property to be split into separate parcels and sold separately
(3) Square footage of both the primary and auxiliary structures
(4) Difficulties in providing a separate water supply to the auxiliary structure
(5) Occupancy/hazard of the auxiliary structure
(6) Ability of emergency response personnel to easily identify the structure from which waterflow is originating

A.8.3.1.1 Whenever possible, sprinklers should be installed in piping after the piping is placed in its final position and secured by hangers in accordance with this standard.

A.8.3.1.3 The purpose of this requirement is to minimize the obstruction of the discharge pattern.

Copyright 2014 National Fire Protection Association (NFPA). Licensed, by agreement, for individual use and download on October 4, 2014 to LEADER and READER for designated user PATTARAPORN SRITRAKOOL. No other reproduction or transmission in any form permitted without written permission of NFPA. For inquires or to report unauthorized use, contact licensing@nfpa.org.

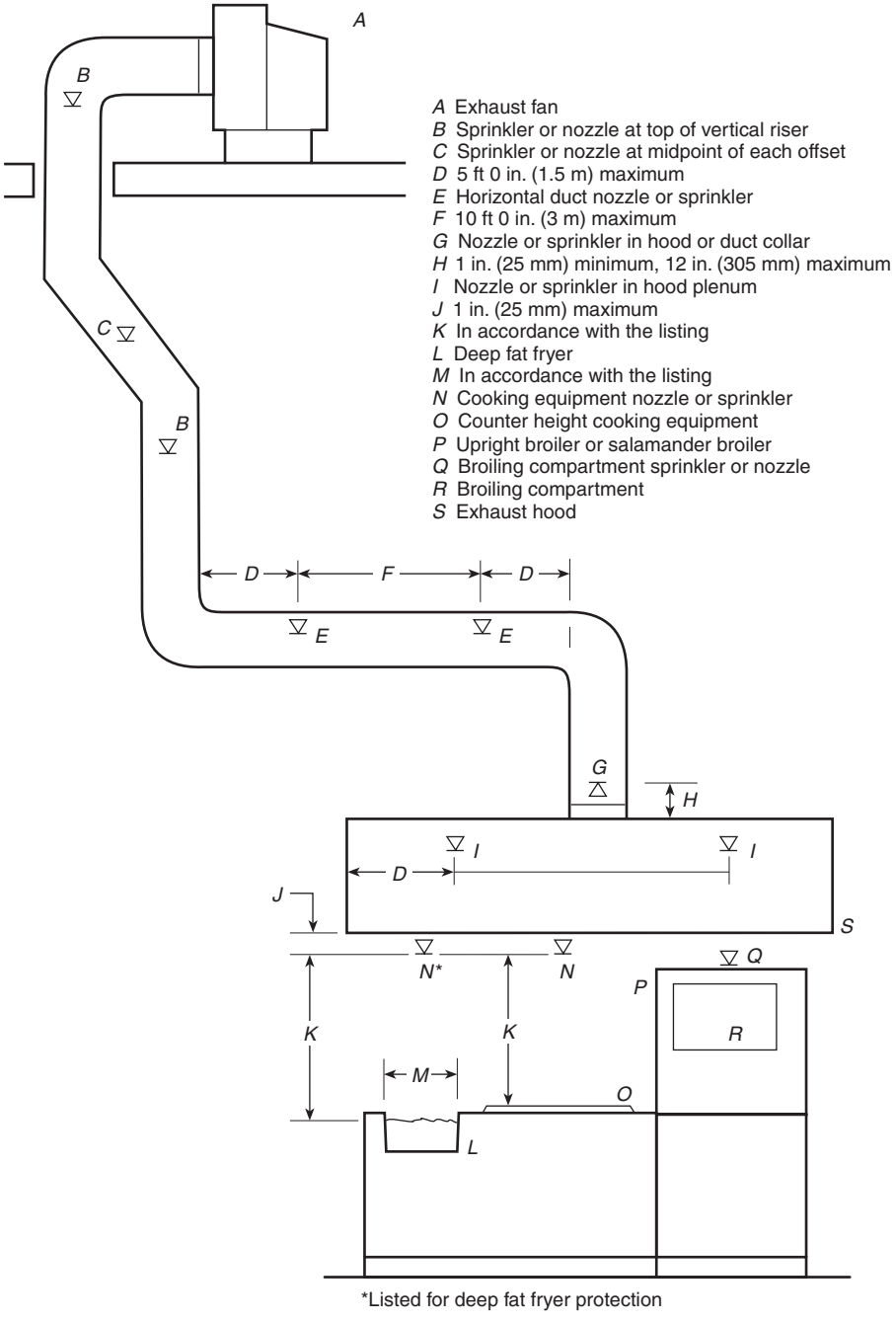

FIGURE A.7.10.2 Typical Installation Showing Automatic Sprinklers or Automatic Nozzles Being Used for Protection of Commercial Cooking Equipment and Ventilation Systems.

A.8.3.1.5.1 Protective caps and straps are intended to provide temporary protection for sprinklers during shipping and installation.

A.8.3.1.5.2 Protective caps and straps can be removed from upright sprinklers, from sprinklers that are fitted with sprinkler guards, and from sprinklers that are not likely to be subject to damage due to construction activities or other events. In general, protective caps and straps should not be removed until construction activities or other events have progressed to the point where the sprinklers will not be subjected to conditions that could cause them to be damaged. Consideration should be given to leaving the protective caps and straps in place where other construction work is expected to take place, adjacent to the sprinklers following their installation, until that activity is complete. Protective caps and straps on sidewall and pendent sprinklers, for example, should be left in place pending installation of the wall and ceiling systems and then removed as finish escutcheons are being installed. In retrofit applications, with minimal follow-on trade construction activity, and with upright sprinklers, it would be reasonable to re-

Copyright 2014 National Fire Protection Association (NFPA). Licensed, by agreement, for individual use and download on October 4, 2014 to LEADER and READER for designated user PATTARAPORN SRITRAKOOL. No other reproduction or transmission in any form permitted without written permission of NFPA. For inquires or to report unauthorized use, contact licensing@nfpa.org.

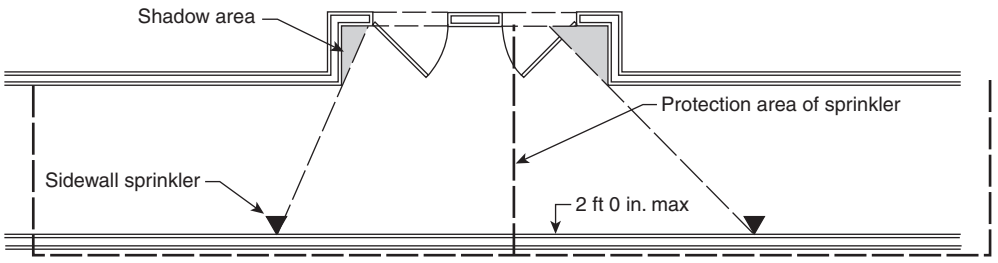

FIGURE A.8.1.1(3)(a) Shadow Area in Corridor.

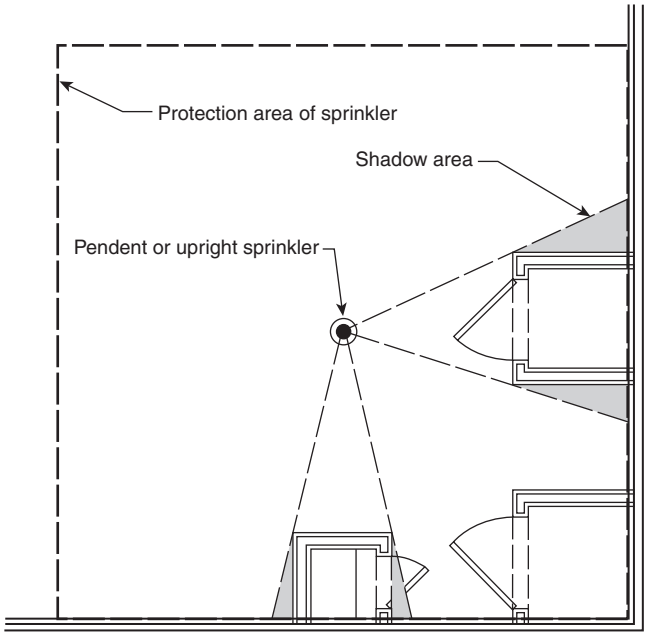

FIGURE A.8.1.1(3)(b) Example of Shadow Area.

move the caps and straps immediately following the installation on the sprinkler piping.

A.8.3.2.1 For protection of baled cotton, fire tests and actual fire experience indicate an initial low heat release; thus, sprinklers in the ordinary-temperature range should offer some advantage by opening faster than those of intermediate- or high-temperature classifications under similar conditions.

A.8.3.2.5 A diffuser in ceiling sheathing labeled by the manufacturer as "horizontal discharge" has directional vanes to move air further along the ceiling, and sprinklers located within the 2 ft 6 in. (0.8 m) radius should have an intermediate-temperature rating.

A.8.3.2.7 Where high temperature–rated sprinklers are installed at the ceiling, high temperature–rated sprinklers also should extend beyond storage in accordance with Table A.8.3.2.7.

A.8.3.3.1 When renovations occur in an existing building and no changes are made in the existing sprinkler system, this section is not intended to require the replacement of existing standard-response sprinklers with quick-response sprinklers.

Table A.8.3.2.7 Distance Beyond Perimeter of Storage for High Hazard Occupancies Protected with High Temperature–Rated Sprinklers

Design Area		Distance	
ft^2	m^2	ft	m
2000	186.0	30	9.1
3000	278.7	40	12.0
4000	371.6	45	13.7
5000	464.5	50	15.2
6000	557.4	55	16.7

A.8.4 The selection of a sprinkler type will vary by occupancy. Where more than one type of sprinkler is used within a compartment, sprinklers with similar response characteristics should be used (i.e., standard- or quick-response). However, some hazards might benefit from designs that include the use of both standard- and quick-response sprinklers. Examples include rack storage protected by standard-response ceiling sprinklers and quick-response in-rack sprinklers. Another case might include opening protection using closely spaced quick-response sprinklers with standard-response sprinklers in the adjoining areas. Other designs can be compromised when sprinklers of differing sensitivity are mixed. An example is a system utilizing ESFR sprinklers adjacent to a system using high-temperature standard-response sprinklers as might be found in a warehouse. In this case, a fire occurring near the boundary might open ESFR sprinklers, which would not be contemplated in the standard-response system design.

A.8.4.5.1 The response and water distribution pattern of listed residential sprinklers have been shown by extensive fire testing to provide better control than spray sprinklers in residential occupancies. These sprinklers are intended to prevent flashover in the room of fire origin, thus improving the chance for occupants to escape or be evacuated.

The protection area for residential sprinklers is defined in the listing of the sprinkler as a maximum square or rectangular area. Listing information is presented in even 2 ft (0.65 m) increments from 12 ft to 20 ft (3.9 m to 6.5 m). When a sprinkler is selected for an application, its area of coverage must be equal to or greater than both the length and width of the hazard area. For example, if the hazard to be protected is a room 13 ft 6 in. (4.4 m) wide and 17 ft 6 in. (5.6 m) long, a sprinkler that is listed to protect a rectangular area of 14 ft × 18 ft (4.5 m × 5.8 m) or a square area of 18 ft × 18 ft (5.8 m × 5.8 m) must be selected. The flow used in the calculations is

Copyright 2014 National Fire Protection Association (NFPA). Licensed, by agreement, for individual use and download on October 4, 2014 to LEADER and READER for designated user PATTARAPORN SRITRAKOOL. No other reproduction or transmission in any form permitted without written permission of NFPA. For inquires or to report unauthorized use, contact licensing@nfpa.org.

then selected as the flow required by the listing for the selected coverage.

Residential sprinklers can only be used in corridors that lead to dwelling units. However, the corridors that lead to dwelling units can also lead to other hazards that are not dwelling units and can still be protected with residential sprinklers.

A.8.4.6.3 Storage in single-story or multistory buildings can be permitted, provided the maximum ceiling/roof height as specified in Table 8.12.2.2.1 is satisfied for each storage area.

A.8.4.7.2 The purpose of this requirement is to avoid scale accumulation.

A.8.4.8.1 Tests of standard sprinklers by approved laboratories have traditionally encompassed a fire test using a 350 lb (160 kg) wood crib and water distribution tests in which water is collected in pans from several arrangements of sprinklers to evaluate distribution under non-fire conditions.

Tests of special sprinklers are customized to evaluate responsiveness, distribution, and other unique characteristics of the sprinkler to control or suppress a fire. Depending on the intended use, these tests might include variables such as the following:

(1) The location of the fire relative to the sprinklers (i.e., below one sprinkler, between two or between four sprinklers)
(2) Fire conditions that encompass a variety of fire growth rates representative of anticipated conditions of use
(3) Tests where multiple sprinklers are expected to operate
(4) Adverse conditions of use (i.e., pipe shadows or other obstructions to discharge)
(5) Effect of a fire plume on water sprinkler discharge

The listing of new sprinkler technology for storage protection should include large-scale fire testing using a commodity or commodities representative of those intended to be protected and should consider at least the following variables:

(1) Ignition under one, between two, and between four sprinklers
(2) Range of clearances between the sprinkler and the commodity
(3) Test(s) at or near the minimum pressures specified for the sprinkler

A.8.4.9.1 Dry sprinklers must be of sufficient length to avoid freezing of the water-filled pipes due to conduction along the barrel. The values of exposed barrel length in Table 8.4.9.1(a) and Table 8.4.9.1(b) have been developed using an assumption of a properly sealed penetration and an assumed maximum wind velocity on the exposed sprinkler of 30 mph (48 km/h). Where higher wind velocity is expected, longer exposed barrel lengths will help avoid freezing of the wet piping. The total length of the barrel of the dry sprinkler must be longer than the values shown in Table 8.4.9.1(a) and Table 8.4.9.1(b) because the length shown in the tables is the minimum length of the barrel that needs to be exposed to the warmer ambient temperature in the heated space. See Figure A.8.4.9.1(a) for an example of where to measure the exposed barrel length for a sidewall sprinkler penetrating an exterior wall and Figure A.8.4.9.1(b) for an example of where to measure the exposed barrel length for a pendent sprinkler penetrating a ceiling or top of a freezer.

A.8.4.9.3 The clearance space around the sprinkler barrel should be sealed to avoid leakage of air into the freezing area that could result in the formation of condensate around the sprinkler frame that could inhibit or cause premature operation. See Figure A.8.4.9.3(a) and Figure A.8.4.9.3(b).

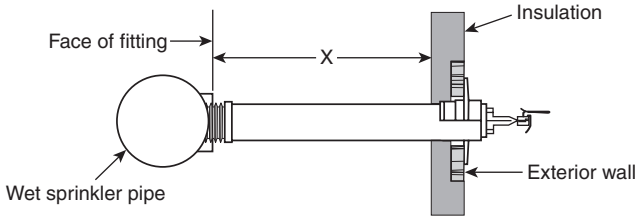

FIGURE A.8.4.9.1(a) Dry Sidewall Sprinkler Through Wall.

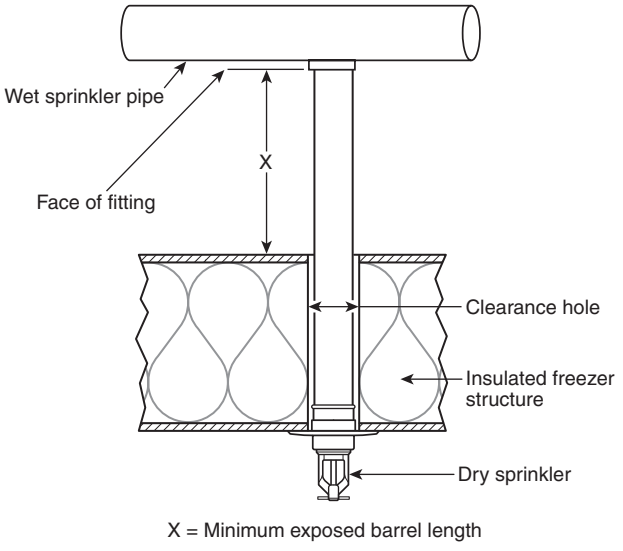

FIGURE A.8.4.9.1(b) Dry Pendent Sprinkler Through Ceiling or Top of Freezer.

A.8.5.4.1 Batt insulation creates an effective thermal barrier and can be considered the ceiling/roof deck when determining distances between deflector and ceiling. The insulation needs to be installed in each pocket (not just above the sprinkler) and attached to the ceiling/roof in such a manner that it will not fall out during a fire prior to sprinkler activation.

A.8.5.4.1.4 The rules describing the maximum distance permitted for sprinklers below ceilings must be followed. The concept of placing a small "heat collector" above a sprinkler to assist in activation is not appropriate, nor is it contemplated in this standard. There is evidence that objects above a sprinkler will delay the activation of the sprinkler where fires are not directly below the sprinkler (but are still in the coverage area of the sprinkler). One of the objectives of the standard is to cool the ceiling near the structural members with spray from a

Copyright 2014 National Fire Protection Association (NFPA). Licensed, by agreement, for individual use and download on October 4, 2014 to LEADER and READER for designated user PATTARAPORN SRITRAKOOL. No other reproduction or transmission in any form permitted without written permission of NFPA. For inquires or to report unauthorized use, contact licensing@nfpa.org.

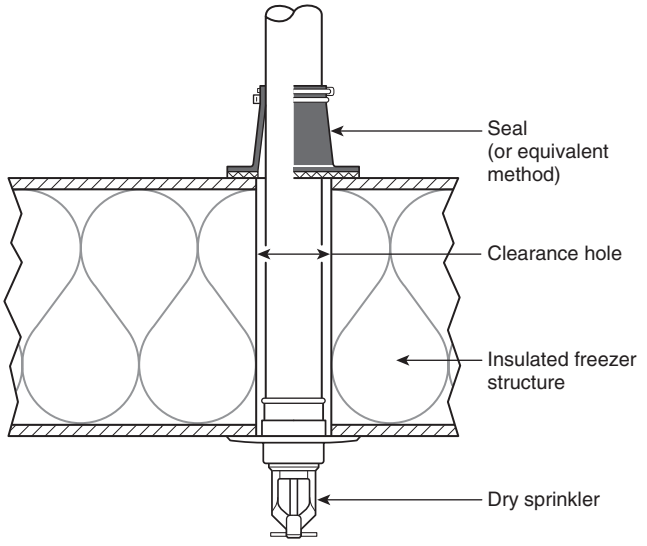

FIGURE A.8.4.9.3(a) Dry Sprinkler Seal Arrangement — Seal on Exterior of Freezer Structure.

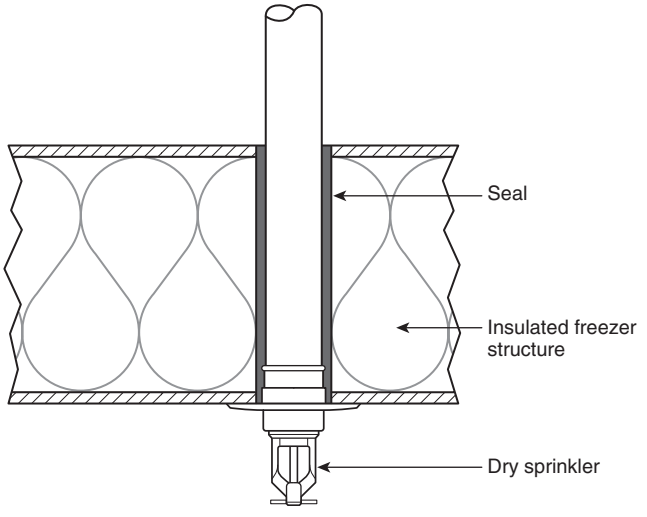

FIGURE A.8.4.9.3(b) Dry Sprinkler Seal Arrangement — Seal Within Freezer Structure.

nearby sprinkler, which is not accomplished by a sprinkler far down from the ceiling, and a heat collector will not help this situation.

A.8.5.5.1 See Figure A.8.5.5.1.

A.8.5.5.2 Where of a depth that will obstruct the spray discharge pattern, girders, beams, or trusses forming narrow pockets of combustible construction along walls can require additional sprinklers. In light and ordinary hazard occupancies, small areas created by architectural features such as planter box windows, bay windows, wing walls, and similar features can be evaluated as follows:

(1) Where no additional floor area is created by the architectural feature, no additional sprinkler protection is required.

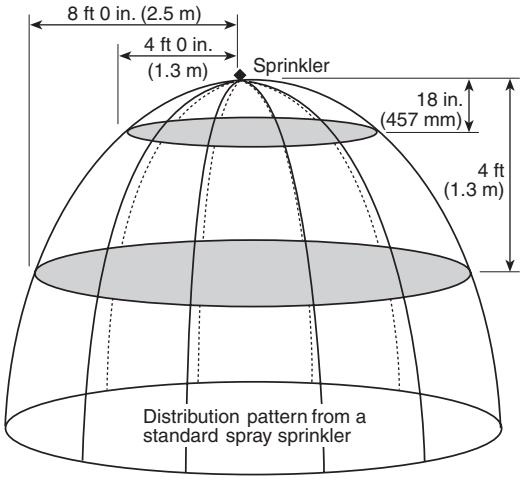

FIGURE A.8.5.5.1 Obstructions to Sprinkler Discharge Pattern Development for Standard Upright or Pendent Spray Sprinklers.

(2) Where additional floor area is created by an architectural feature, no additional sprinkler protection is required, provided all of the following conditions are met:
   (a) The floor area does not exceed 18 ft^2 (1.7 m^2).
   (b) The floor area is not greater than 2 ft (0.65 m) in depth at the deepest point of the architectural feature to the plane of the primary wall where measured along the finished floor.
   (c) The floor area is not greater than 9 ft (2.9 m) in length where measured along the plane of the primary wall.

Measurement from the deepest point of the architectural feature to the sprinkler should not exceed the maximum listed spacing of the sprinkler. When no additional floor space is created, the hydraulic design is not required to consider the area created by the architectural feature. Where the obstruction criteria established by this standard are followed, sprinkler spray patterns will not necessarily get water to every square foot of space within a room.

A.8.5.5.3 Frequently, additional sprinkler equipment can be avoided by reducing the width of decks or galleries and providing proper clearances. Slatting of decks or walkways or the use of open grating as a substitute for automatic sprinklers thereunder is not acceptable. The use of cloth or paper dust tops for rooms forms obstruction to water distribution. If dust tops are used, the area below should be sprinklered.

A.8.5.5.3.1 When obstructions are located more than 18 in. (457 mm) below the sprinkler deflector, an adequate spray pattern develops and obstructions up to and including 4 ft (1.2 m) wide do not require additional protection underneath. Examples are ducts, decks, open grate flooring, catwalks, cutting tables, overhead doors, soffits, ceiling panels, and other similar obstructions.

A.8.5.5.3.3 Sprinklers under open gratings should be provided with shields. Shields over automatic sprinklers should not be less, in least dimension, than four times the distance between the shield and fusible element, except special sprinklers incorporating a built-in shield need not comply with this recommendation if listed for the particular application.

A.8.5.6.1 The 18 in. (457 mm) clearance does not apply to vehicles in concrete parking structures.

Copyright 2014 National Fire Protection Association (NFPA). Licensed, by agreement, for individual use and download on October 4, 2014 to LEADER and READER for designated user PATTARAPORN SRITRAKOOL. No other reproduction or transmission in any form permitted without written permission of NFPA. For inquires or to report unauthorized use, contact licensing@nfpa.org.

A.8.6.2.2.1 When the spacing between sprinklers perpendicular to the slope exceeds 8 ft (2.44 m), it is necessary to increase the minimum density or sprinkler operating pressure as noted in Table 8.6.2.2.1(a) and in 8.6.4.1.4. Time to sprinkler activation and water distribution can be affected within combustible concealed spaces with sloped roofs or ceilings in these combustible concealed spaces, especially where wood joist rafters or wood truss construction is used. To reduce the probability of fires in these combustible concealed spaces involving the combustible roof or ceiling construction above standard spray sprinklers, more stringent spacing and installation guidelines apply.

A.8.6.3.2.3 See Figure A.8.6.3.2.3.

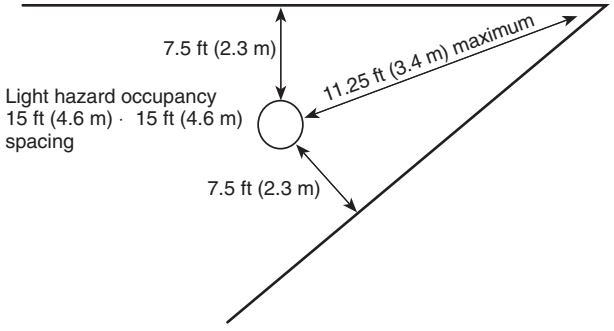

FIGURE A.8.6.3.2.3 Maximum Distance from Walls.

A.8.6.3.2.4 An example of sprinklers in small rooms is shown in Figure A.8.6.3.2.4(a), Figure A.8.6.3.2.4(b), Figure A.8.6.3.2.4(c), and Figure A.8.6.3.2.4(d).

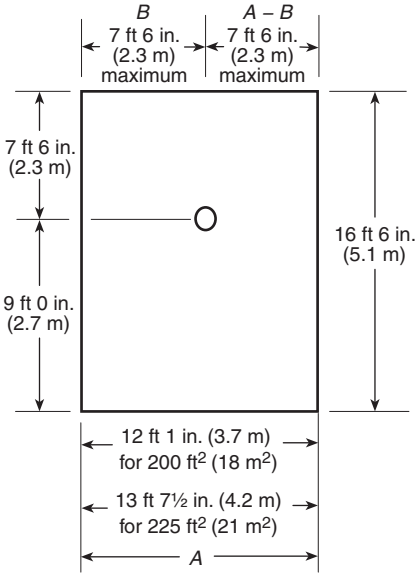

FIGURE A.8.6.3.2.4(a) Small Room Provision — One Sprinkler.

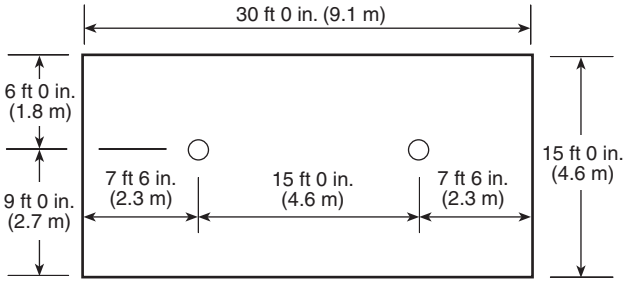

FIGURE A.8.6.3.2.4(b) Small Room Provision — Two Sprinklers Centered Between Sidewalls.

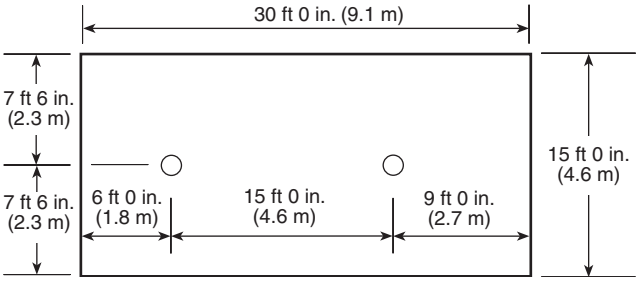

FIGURE A.8.6.3.2.4(c) Small Room Provision — Two Sprinklers Centered Between Top and Bottom Walls.

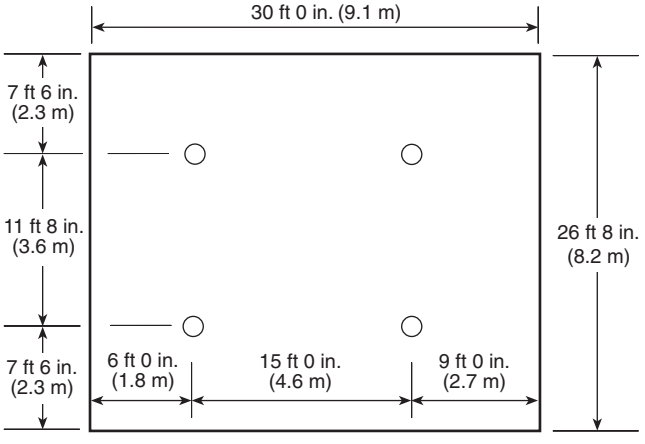

FIGURE A.8.6.3.2.4(d) Small Room Provision — Four Sprinklers.

A.8.6.4.1.2(5) For concrete joists spaced less than 3 ft (0.91 m) on center, the rules for obstructed construction shown in 8.6.4.1.2 apply. For concrete tee construction with stems spaced less than 7 ft 6 in. (2.3 m) but more than 3 ft (0.91 m) on center, the sprinkler deflector can be located at or above a horizontal plane 1 in. (25.4 mm) below the bottom of the stems of the tees. This includes sprinklers located between the stems. *[See Figure A.8.6.4.1.2(5).]*



FIGURE A.8.6.4.1.2(5) Typical Concrete Joist Construction.

Copyright 2014 National Fire Protection Association (NFPA). Licensed, by agreement, for individual use and download on October 4, 2014 to LEADER and READER for designated user PATTARAPORN SRITRAKOOL. No other reproduction or transmission in any form permitted without written permission of NFPA. For inquires or to report unauthorized use, contact licensing@nfpa.org.

A.8.6.4.1.3.2 Saw-toothed roofs have regularly spaced monitors of saw tooth shape, with the nearly vertical side glazed and usually arranged for venting. Sprinkler placement is limited to a maximum of 3 ft (0.91 m) down the slope from the peak because of the effect of venting on sprinkler sensitivity.

A.8.6.4.1.3.3 Generally, where applying the requirements of this section, a surface having a slope greater than or equal to 18 in 12 is needed.

A.8.6.5.1.2 The intent of 8.6.5.1.2(3) is to apply to soffits that are located within the 18 in. (457 mm) plane from the sprinkler deflector. A soffit or other obstruction (i.e., shelf) located against a wall that is located entirely below the 18 in. (457 mm) plane from the sprinkler deflector should be in accordance with 8.6.5.3.3. *(See Figure A.8.6.5.1.2.)*

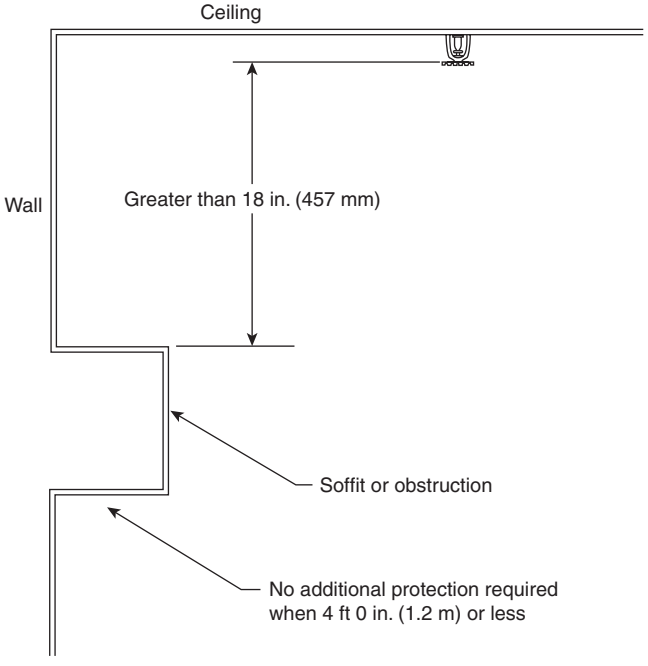

FIGURE A.8.6.5.1.2 Soffit/Obstruction Against Wall Greater Than 18 in. (457 mm) Below Deflector.

A.8.6.5.2.1.3 The rules of 8.6.5.2.1.3 (known as the "Three Times Rule") have been written to apply to obstructions where the sprinkler can be expected to get water to both sides of the obstruction without allowing a significant dry shadow on the other side of the obstruction. This works for small noncontinuous obstructions and for continuous obstructions where the sprinkler can throw water over and under the obstruction, such as the bottom chord of an open truss or joist. For solid continuous obstructions, such as a beam, the Three Times Rule is ineffective since the sprinkler cannot throw water over and under the obstruction. Sufficient water must be thrown under the obstruction to adequately cover the floor area on the other side of the obstruction. To ensure this, compliance with the rules of 8.6.5.1.2 is necessary.

A.8.6.5.2.1.4 It is the intent of this section to exempt nonstructural elements in light and ordinary hazard occupancies from the obstruction criteria commonly called the "Three Times Rule." However, the other obstruction rules, including the "Beam Rule" *(see 8.6.5.1.2)* and the "Wide Obstruction Rule" *(see 8.6.5.3.3)*, still apply. If an obstruction is so close to a sprinkler that water cannot spray on both sides, it is effectively a continuous obstruction as far as the sprinkler is concerned and the Beam Rule should be applied.

It is not the intent of this section to permit the use of fixtures and architectural features or treatments to conceal, obscure, or otherwise obstruct sprinkler discharge. The requirement should be applied in accordance with the performance objectives in 8.6.5.1.

A.8.6.5.2.1.10 The housing unit of the ceiling fan is expected to be addressed by the Three Times Rule.

A.8.6.5.2.2.1 Testing has shown that privacy curtains supported from the ceiling by mesh fabric do not obstruct the distribution pattern in a negative way as long as the mesh is 70 percent or more open and extends from the ceiling a minimum of 22 in. (559 mm).

A.8.6.5.3 See A.8.5.5.3.

A.8.6.5.3.3 When obstructions are located more than 18 in. (457 mm) below the sprinkler deflector, an adequate spray pattern develops and obstructions up to and including 4 ft (1.2 m) wide do not require additional protection underneath. Examples are ducts, decks, open grate flooring, catwalks, cutting tables, overhead doors, soffits, ceiling panels, and other similar obstructions.

The width of an object is the lesser of the two horizontal dimensions (with the length being the longer horizontal dimension). Sprinkler protection is not required under objects where the length is greater than 4 ft (1.2 m) and the width is 4 ft (1.2 m) or less.

A.8.6.7.1 Ceiling features in unobstructed construction that are protected by sprinklers in the lower ceiling elevation when the higher ceiling elevation is within 12 in. (305 mm) of the deflectors or greater for sprinklers with greater listed distances from the higher ceiling should not be considered unprotected ceiling pockets.

A.8.6.7.2(4) It is the intent of this section to allow compartments with multiple pockets, where the cumulative volume of the pockets exceeds 1000 ft^3 (28.3 m^3) and separated from each other by 10 ft (3.05 m) or more and still be permitted to be unprotected because with these values, a sprinkler would be required between such pockets. For smaller pockets where the cumulative volume does not exceed 1000 ft^3 (28.3 m^3), there is no reason to separate the pockets by any specific distance because they are not worse than a single pocket that is 1000 ft^3 (28.3 m^3).

A.8.7.4.1.2.1 The 6 in. (152 mm) as referenced is measured from the wall to the vertical plane representing the surface of attachment of the deflector. See Figure A.8.7.4.1.2.1.

A.8.7.4.1.3.2 See Figure A.8.7.4.1.3.2.

A.8.7.4.1.3.3 See Figure A.8.7.4.1.3.3.

A.8.7.5.1.6 See Figure A.8.7.5.1.6.

A.8.7.5.2.1.3 The rules of 8.7.5.2.1.3 (known as the "Three Times Rule") have been written to apply to obstructions where the sprinkler can be expected to get water to both sides of the obstruction without allowing a significant dry shadow on the other side of the obstruction. This works for small noncontinuous obstructions and for continuous obstructions where the sprinkler can throw water over and under the obstruction,

Copyright 2014 National Fire Protection Association (NFPA). Licensed, by agreement, for individual use and download on October 4, 2014 to LEADER and READER for designated user PATTARAPORN SRITRAKOOL. No other reproduction or transmission in any form permitted without written permission of NFPA. For inquires or to report unauthorized use, contact licensing@nfpa.org.

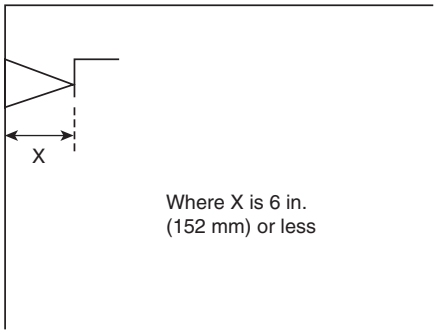

FIGURE A.8.7.4.1.2.1 Sidewall Sprinkler Deflector Measurement From Walls.

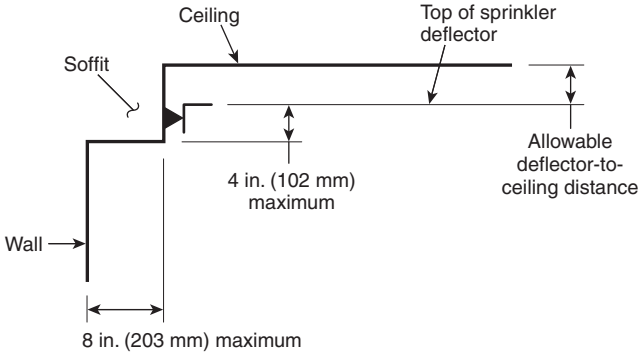

FIGURE A.8.7.4.1.3.2 Location Sidewalls with Respect to Soffits — Sidewall in Soffit.

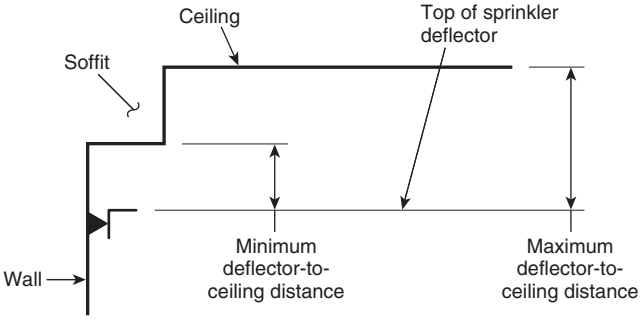

FIGURE A.8.7.4.1.3.3 Location Sidewalls with Respect to Soffits — Sidewall Under Soffit.

such as the bottom chord of an open truss or joist. For solid continuous obstructions, such as a beam, the Three Times Rule is ineffective since the sprinkler cannot throw water over and under the obstruction. Sufficient water must be thrown under the obstruction to adequately cover the floor area on the other side of the obstruction. To ensure this, compliance with the rules of 8.7.5.1.2 is necessary.

A.8.7.5.2.1.6 The housing unit of the ceiling fan is expected to be addressed by the Three Times Rule.

A.8.7.5.2.2.1 Testing has shown that privacy curtains supported from the ceiling by mesh fabric do not obstruct the distribution pattern in a negative way as long as the mesh is 70 percent or more open and extends from the ceiling a minimum of 22 in. (559 mm).

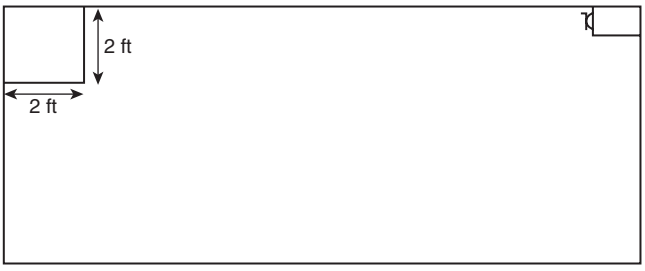

FIGURE A.8.7.5.1.6 Permitted Obstruction on Wall Opposite Sidewall Sprinkler.

A.8.7.5.3 See A.8.5.5.3.

A.8.7.6 See 8.6.6.2.

A.8.8.2.1 The protection area for extended coverage upright and pendent sprinklers is defined in the listing of the sprinkler as a maximum square area. Listing information is presented in even 2 ft (0.6 m) increments up to 20 ft (6.1 m). When a sprinkler is selected for an application, its area of coverage must be equal to or greater than both the length and width of the hazard area. For example, if the hazard to be protected is a room 13 ft 6 in. (4.1 m) wide and 17 ft 6 in. (5.3 m) long as indicated in Figure A.8.8.2.1, a sprinkler that is listed to protect an area of 18 ft × 18 ft (5.5 m × 5.5 m) must be selected. The flow used in the calculations is then selected as the flow required by the listing for the selected coverage.

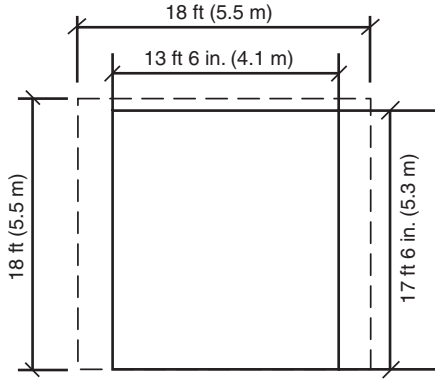

FIGURE A.8.8.2.1 Determination of Protection Area of Coverage for Extended Coverage Upright and Pendent Sprinklers.

A.8.8.2.2.1 Testing has shown that privacy curtains supported from the ceiling by mesh fabric do not obstruct the distribution pattern in a negative way as long as the mesh is 70 percent or more open and extends from the ceiling a minimum of 22 in. (559 mm).

A.8.8.4.1.1.4(A) See Figure A.8.8.4.1.1.4(A).

A.8.8.4.1.1.4(B) See Figure A.8.8.4.1.1.4(B).

A.8.8.4.1.3 Saw-toothed roofs have regularly spaced monitors of saw tooth shape, with the nearly vertical side glazed and usually arranged for venting. Sprinkler placement is limited to

Copyright 2014 National Fire Protection Association (NFPA). Licensed, by agreement, for individual use and download on October 4, 2014 to LEADER and READER for designated user PATTARAPORN SRITRAKOOL. No other reproduction or transmission in any form permitted without written permission of NFPA. For inquires or to report unauthorized use, contact licensing@nfpa.org.

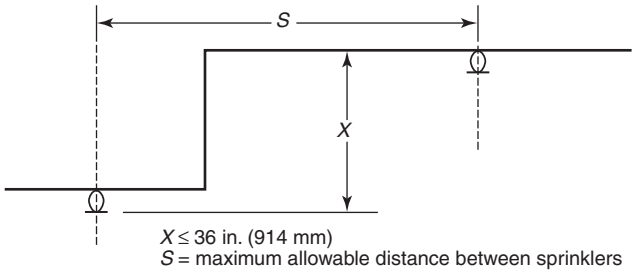

FIGURE A.8.8.4.1.1.4(A) Vertical Change in Ceiling Elevation Less Than or Equal to 36 in. (914 mm).

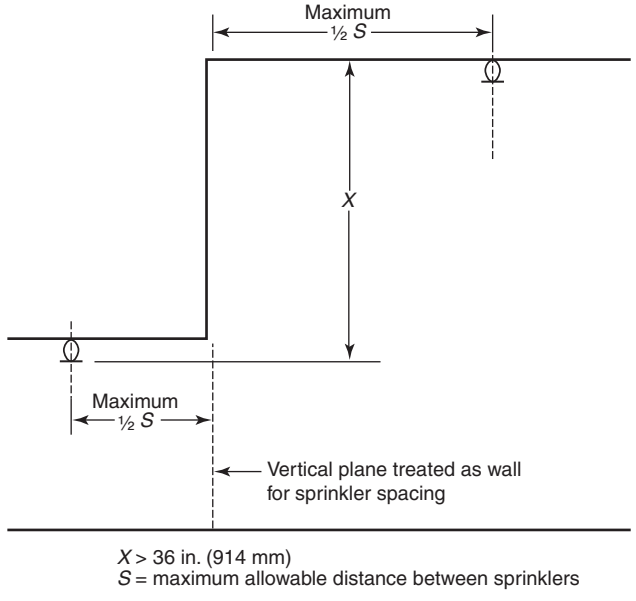

FIGURE A.8.8.4.1.1.4(B) Vertical Change in Ceiling Elevation Greater Than 36 in. (914 mm).

a maximum of 3 ft (0.91 m) down the slope from the peak because of the effect of venting on sprinkler sensitivity.

A.8.8.5.1.2 The intent of 8.8.5.1.2(3) is to apply to soffits that are located within the 18 in. (457 mm) plane from the sprinkler deflector. A soffit or other obstruction (i.e., shelf) located against a wall that is located entirely below the 18 in. (457 mm) plane from the sprinkler deflector should be in accordance with 8.8.5.3.2. *(See Figure A.8.8.5.1.2.)*

A.8.8.5.2.1.3 The rules of 8.8.5.2.1.3 (known as the "Four Times Rule") have been written to apply to obstructions where the sprinkler can be expected to get water to both sides of the obstruction without allowing a significant dry shadow on the other side of the obstruction. This works for small noncontinuous obstructions and for continuous obstructions where the sprinkler can throw water over and under the obstruction, such as the bottom chord of an open truss or joist. For solid continuous obstructions, such as a beam, the Four Times Rule is ineffective since the sprinkler cannot throw water over and under the obstruction. Sufficient water must be thrown under the obstruction to adequately cover the floor area on the other side of the obstruction. To ensure this, compliance with the rules of 8.8.5.1.2 is necessary.

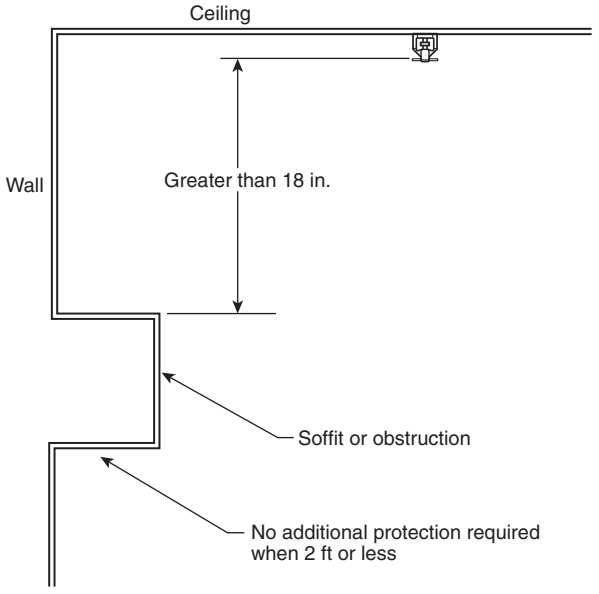

FIGURE A.8.8.5.1.2 Soffit/Obstruction Against Wall Greater Than 18 in. (457 mm) Below Deflector.

A.8.8.5.2.1.9 The housing unit of the ceiling fan is expected to be addressed by the Four Times Rule.

A.8.8.5.3 See A.8.5.5.3.

A.8.8.6 See 8.6.6.2.

A.8.8.7.1 Ceiling features in unobstructed construction that are protected by sprinklers in the lower ceiling elevation when the higher ceiling elevation is within 12 in. (305 mm) of the deflectors or greater for sprinklers with greater listed distances from the higher ceiling should not be considered unprotected ceiling pockets.

A.8.8.7.2(4) It is the intent of this section to allow compartments with multiple pockets, where the cumulative volume of the pockets exceeds 1000 ft^3 (28.3 m^3) and separated from each other by 10 ft (3.05 m) or more and still be permitted to be unprotected because with these values, a sprinkler would be required between such pockets. For smaller pockets where the cumulative volume does not exceed 1000 ft^3 (28.3 m^3), there is no reason to separate the pockets by any specific distance because they are not worse than a single pocket that is 1000 ft^3 (28.3 m^3).

A.8.9 See 8.6.6.2.

A.8.9.2.1 The protection area for extended coverage sidewall spray sprinklers is defined in the listing of the sprinkler as a maximum square or rectangular area. Listing information is presented in even 2 ft (0.65 m) increments up to 28 ft (9 m) for extended coverage sidewall spray sprinklers. When a sprinkler is selected for an application, its area of coverage must be equal to or greater than both the length and width of the hazard area. For example, if the hazard to be protected is a room 14 ft 6 in. (4.4 m) wide and 20 ft 8 in. (6.3 m) long as indicated in Figure A.8.9.2.1, a sprinkler that is listed to protect an area of 16 ft × 22 ft (4.9 m × 6.7 m) must be selected. The flow used in the calculations is then selected as the flow required by the listing for the selected coverage.

A.8.9.4.1.2.1 See A.8.7.4.1.2.1.

Copyright 2014 National Fire Protection Association (NFPA). Licensed, by agreement, for individual use and download on October 4, 2014 to LEADER and READER for designated user PATTARAPORN SRITRAKOOL. No other reproduction or transmission in any form permitted without written permission of NFPA. For inquires or to report unauthorized use, contact licensing@nfpa.org.

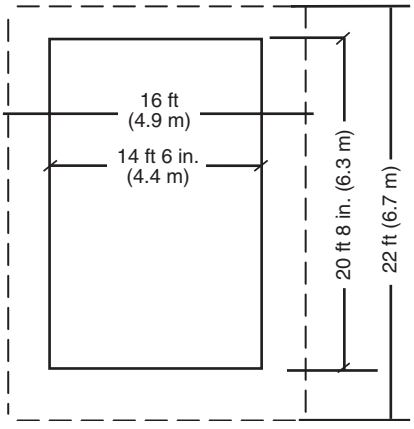

FIGURE A.8.9.2.1 Determination of Protection Area of Coverage for Extended Coverage Sidewall Sprinklers.

A.8.9.4.1.3.1 See Figure A.8.9.4.1.3.1.

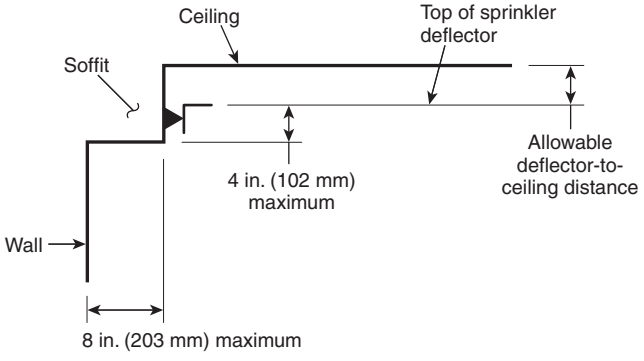

FIGURE A.8.9.4.1.3.1 Location of Extended Coverage Sidewalls with Respect to Soffits — Sidewall in Soffit.

A.8.9.4.1.3.2 See Figure A.8.9.4.1.3.2.

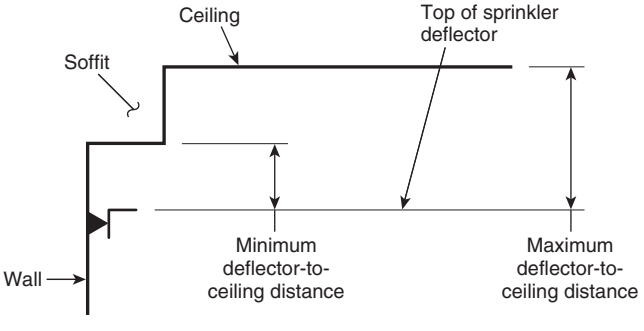

FIGURE A.8.9.4.1.3.2 Location of Extended Coverage Sidewalls with Respect to Soffits — Sidewall Under Soffit.

A.8.9.4.1.4 The requirements in 8.9.4.1.4 were developed from years of experience with NFPA 13 obstruction requirements and an additional test series conducted by the National Fire Sprinkler Association with the help of Tyco International (Valentine and Isman, *Kitchen Cabinets and Residential Sprinklers*, National Fire Sprinkler Association, November 2005), which included fire modeling, distribution tests, and full-scale fire tests. The test series showed that pendent sprinklers definitely provide protection for kitchens, even for fires that start under the cabinets. The information in the series was less than definitive for sidewall sprinklers, but distribution data show that sprinklers in the positions in this standard provide adequate water distribution in front of the cabinets and that sidewall sprinklers should be able to control a fire that starts under the cabinets. When protecting kitchens or similar rooms with cabinets, the pendent sprinkler should be the first option. If pendent sprinklers cannot be installed, the next best option is a sidewall sprinkler on the opposite wall from the cabinets, spraying in the direction of the cabinets. The third best option is the sidewall sprinkler on the same wall as the cabinets, on a soffit flush with the face of the cabinet. The last option should be putting sprinklers on the wall back behind the face of the cabinet because this location is subject to being blocked by items placed on top of the cabinets. It is not the intent of the committee to require sprinklers under kitchen cabinets.

A.8.9.5.1.6 See Figure A.8.9.5.1.6.

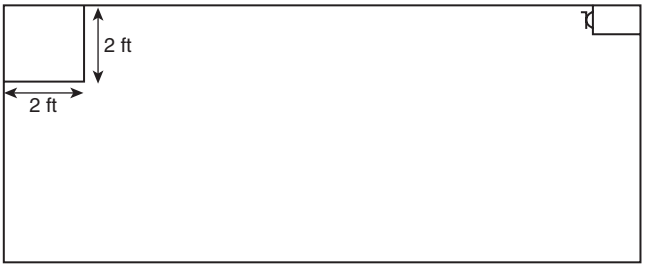

FIGURE A.8.9.5.1.6 Permitted Obstruction on Wall Opposite EC Sidewall Sprinkler.

A.8.9.5.2.1.3 The rules of 8.9.5.2.1.3 (known as the "Four Times Rule") have been written to apply to obstructions where the sprinkler can be expected to get water to both sides of the obstruction without allowing a significant dry shadow on the other side of the obstruction. This works for small noncontinuous obstructions and for continuous obstructions where the sprinkler can throw water over and under the obstruction, such as the bottom chord of an open truss or joist. For solid continuous obstructions, such as a beam, the Four Times Rule is ineffective since the sprinkler cannot throw water over and under the obstruction. Sufficient water must be thrown under the obstruction to adequately cover the floor area on the other side of the obstruction. To ensure this, compliance with the rules of 8.9.5.1.2 is necessary.

A.8.9.5.2.1.7 The housing unit of the ceiling fan is expected to be addressed by the Four Times Rule.

A.8.9.5.2.2.1 Testing has shown that privacy curtains supported from the ceiling by mesh fabric do not obstruct the distribution pattern in a negative way as long as the mesh is 70 percent or more open and extends from the ceiling a minimum of 22 in. (559 mm).

A.8.9.5.3 See A.8.5.5.3.

A.8.10.2 Residential sprinklers should be used in compliance with their listing limits. Where there are no listed residential sprinklers for a particular arrangement, other design approaches

Copyright 2014 National Fire Protection Association (NFPA). Licensed, by agreement, for individual use and download on October 4, 2014 to LEADER and READER for designated user PATTARAPORN SRITRAKOOL. No other reproduction or transmission in any form permitted without written permission of NFPA. For inquires or to report unauthorized use, contact licensing@nfpa.org.

from NFPA 13 should be utilized, such as using quick-response sprinklers.

A.8.10.6.2.1.3 The rules of 8.10.6.2.1.3 (known as the "Four Times Rule") have been written to apply to obstructions where the sprinkler can be expected to get water to both sides of the obstruction without allowing a significant dry shadow on the other side of the obstruction. This works for small noncontinuous obstructions and for continuous obstructions where the sprinkler can throw water over and under the obstruction, such as the bottom chord of an open truss or joist. For solid continuous obstructions, such as a beam, the Four Times Rule is ineffective since the sprinkler cannot throw water over and under the obstruction. Sufficient water must be thrown under the obstruction to adequately cover the floor area on the other side of the obstruction. To ensure this, compliance with the rules of 8.10.6.1.2 is necessary.

A.8.10.6.2.1.9 The housing unit of the ceiling fan is expected to be addressed by the Three Times Rule or the Four Times Rule.

A.8.10.6.3 See A.8.5.5.3.

A.8.10.7.1.5 The requirements in 8.10.7.1.5 were developed from years of experience with NFPA 13 obstruction requirements and an additional test series conducted by the National Fire Sprinkler Association with the help of Tyco International (Valentine and Isman, *Kitchen Cabinets and Residential Sprinklers*, National Fire Sprinkler Association, November 2005), which included fire modeling, distribution tests, and full-scale fire tests. The test series showed that pendent sprinklers definitely provide protection for kitchens, even for fires that start under the cabinets. The information in the series was less than definitive for sidewall sprinklers, but distribution data shows that sprinklers in the positions in this standard provide adequate water distribution in front of the cabinets and that sidewall sprinklers should be able to control a fire that starts under the cabinets. When protecting kitchens or similar rooms with cabinets, the pendent sprinkler should be the first option. If pendent sprinklers cannot be installed, the next best option is a sidewall sprinkler on the opposite wall from the cabinets, spraying in the direction of the cabinets. The third best option is the sidewall sprinkler on the same wall as the cabinets on a soffit flush with the face of the cabinet. The last option should be putting sprinklers on the wall back behind the face of the cabinet because this location is subject to being blocked by items placed on top of the cabinets. It is not the intent of the committee to require sprinklers under kitchen cabinets.

A.8.10.7.1.6 See Figure A.8.10.7.1.6.



FIGURE A.8.10.7.1.6 Permitted Obstruction on Wall Opposite Residential Sidewall Sprinkler.

A.8.10.7.2.1.3 The rules of 8.10.7.2.1.3 (known as the Four Times Rule) have been written to apply to obstructions where the sprinkler can be expected to get water to both sides of the obstruction without allowing a significant dry shadow on the other side of the obstruction. This works for small noncontinuous obstructions and for continuous obstructions where the sprinkler can throw water over and under the obstruction, such as the bottom chord of an open truss or joist. For solid continuous obstructions, such as a beam, the Four Times Rule is ineffective since the sprinkler cannot throw water over and under the obstruction. Sufficient water must be thrown under the obstruction to adequately cover the floor area on the other side of the obstruction. To ensure this, compliance with the rules of 8.10.6.1.2 is necessary.

A.8.10.7.2.1.7 The housing unit of the ceiling fan is expected to be addressed by the Four Times Rule.

A.8.10.7.3 See A.8.5.5.3.

A.8.11.2 Tests involving areas of coverage over 100 ft^2 (9.3 m^2) for CMSA sprinklers are limited in number, and use of areas of coverage over 100 ft^2 (9.3 m^2) should be carefully considered.

A.8.11.3.1 It is important that sprinklers in the immediate vicinity of the fire center not skip, and this requirement imposes certain restrictions on the spacing.

A.8.11.4.1 If all other factors are held constant, the operating time of the first sprinkler will vary exponentially with the distance between the ceiling and deflector. At distances greater than 7 in. (178 mm), for other than open wood joist construction, the delayed operating time will permit the fire to gain headway, with the result that substantially more sprinklers operate. At distances less than 7 in. (178 mm), other effects occur. Changes in distribution, penetration, and cooling nullify the advantage gained by faster operation. The net result again is increased fire damage accompanied by an increase in the number of sprinklers operated. The optimum clearance between deflectors and ceiling is therefore 7 in. (178 mm). For open wood joist construction, the optimum clearance between deflectors and the bottom of joists is 3½ in. (89 mm).

A.8.11.5 To a great extent, CMSA sprinklers rely on direct attack to gain rapid control of both the burning fuel and ceiling temperatures. Therefore, interference with the discharge pattern and obstructions to the distribution should be avoided.

A.8.11.5.2.1.3 The rules of 8.11.5.2.1.3 (known as the "Three Times Rule") have been written to apply to obstructions where the sprinkler can be expected to get water to both sides of the obstruction without allowing a significant dry shadow on the other side of the obstruction. This works for small noncontinuous obstructions and for continuous obstructions where the sprinkler can throw water over and under the obstruction, such as the bottom chord of an open truss or joist. For solid continuous obstructions, such as a beam, the Three Times Rule is ineffective since the sprinkler cannot throw water over and under the obstruction. Sufficient water must be thrown under the obstruction to adequately cover the floor area on the other side of the obstruction. To ensure this, compliance with the rules of 8.11.5.1.2 is necessary.

A.8.11.5.3 See A.8.5.5.3.

A.8.12.2.2.3 See Figure A.8.12.2.2.3.

A.8.12.3.1(3) See Figure A.8.12.2.2.3.

Copyright 2014 National Fire Protection Association (NFPA). Licensed, by agreement, for individual use and download on October 4, 2014 to LEADER and READER for designated user PATTARAPORN SRITRAKOOL. No other reproduction or transmission in any form permitted without written permission of NFPA. For inquires or to report unauthorized use, contact licensing@nfpa.org.

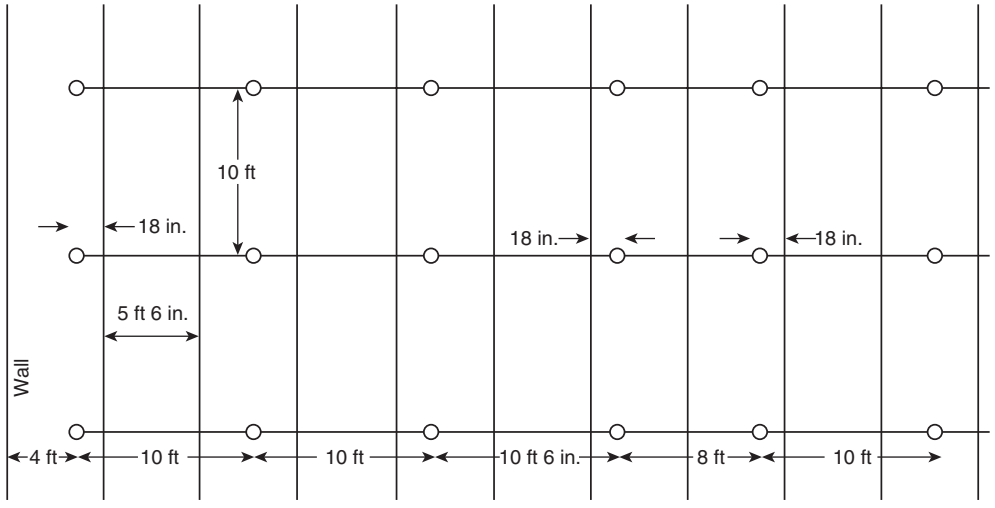

Example 1 of ESFR "Shift" Rule (bar joists or trusses 5 ft 6 in. o.c.)
Measurement shown is from centerline for ease of illustration; actual measurement to obstruction is to near edge of structural member.

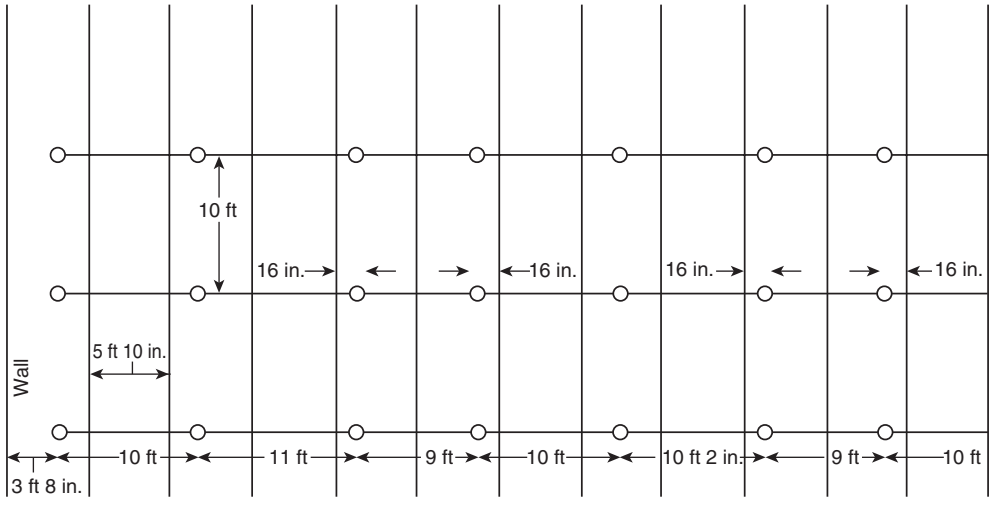

Example 2 of ESFR "Shift" Rule (bar joists or trusses 5 ft 10 in. o.c.)
Measurement shown is from centerline for ease of illustration; actual measurement to obstruction is to near edge of structural member.

FIGURE A.8.12.2.2.3 ESFR Sprinkler Spacing Within Trusses and Bar Joists.

A.8.12.5.2 Isolated obstructions that block adjacent sprinklers in a similar manner should be treated as a continuous obstruction. High volume low speed fans with large diameters [(20 ft (6 m)] represent potential obstructions for ESFR sprinklers and should be positioned in accordance with the provisions of 8.12.5.2 with regard to both the fan motor unit and the blades.

A.8.15.1.2 Paragraphs 8.15.1.2.3, 8.15.1.2.4, and 8.15.1.2.5 do not require sprinkler protection because it is not physically practical to install sprinklers in the types of concealed spaces discussed in these three exceptions. To reduce the possibility of uncontrolled fire spread, consideration should be given in these unsprinklered concealed space situations to using 8.15.1.2.7, 8.15.1.2.10, and 8.15.1.2.12. Omitting sprinklers from combustible concealed spaces will require further evaluation of the sprinkler system design area in accordance with 11.2.3.1.4.

A.8.15.1.2.1 Minor quantities of combustible materials such as but not limited to cabling, nonmetallic plumbing piping, nonstructural wood, and so forth can be present in concealed spaces constructed of limited or noncombustible materials but should not typically be viewed as requiring sprinklers *(see 8.15.1.1)*. For example, it is not the intent of this section to require sprinklers, which would not otherwise be required, in the interstitial space of a typical office building solely due to the presence of the usual amount of cabling within the space. The threshold value at which sprinklers become necessary in the concealed space is not defined.

A.8.15.1.2.5 Solid metal purlin construction with a wood deck is one example of similar solid member construction.

A.8.15.1.2.6 See Figure A.8.15.1.2.6.

Copyright 2014 National Fire Protection Association (NFPA). Licensed, by agreement, for individual use and download on October 4, 2014 to LEADER and READER for designated user PATTARAPORN SRITRAKOOL. No other reproduction or transmission in any form permitted without written permission of NFPA. For inquires or to report unauthorized use, contact licensing@nfpa.org.

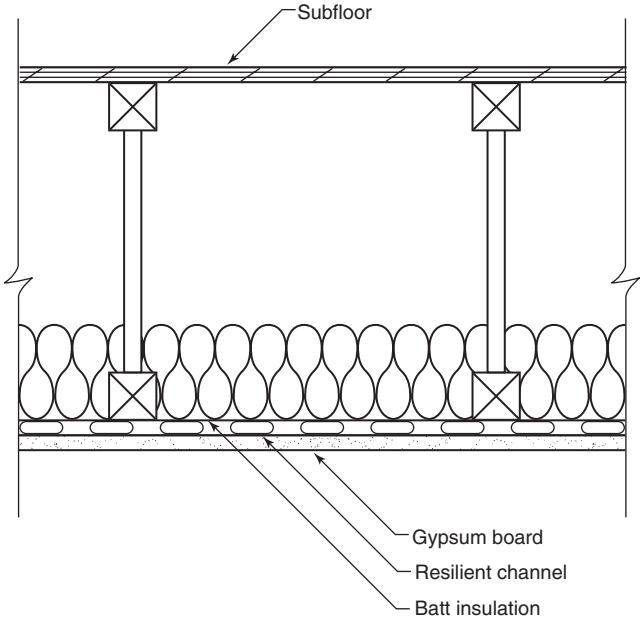

FIGURE A.8.15.1.2.6 Combustible Concealed Space Cross Section.

A.8.15.1.2.11 The allowance to omit sprinklers for fire retardant–treated wood requires a pressure-treated application. It does not apply to coated applications.

A.8.15.1.2.16 See Figure A.8.15.1.2.16 for one example.

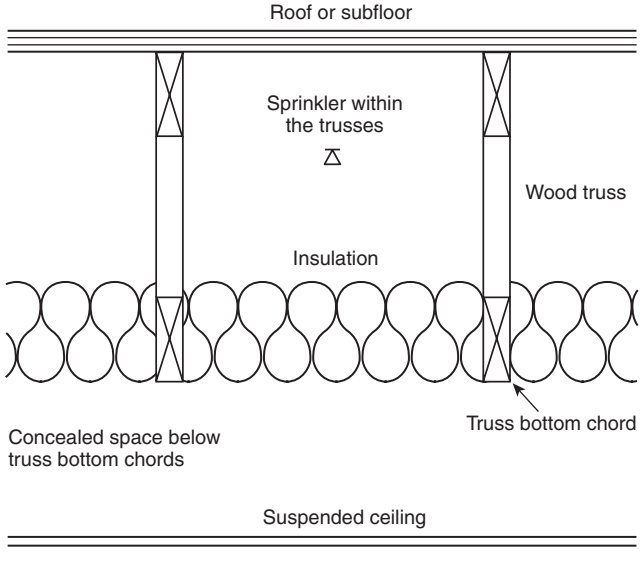

FIGURE A.8.15.1.2.16 One Acceptable Arrangement of Concealed Space in Truss Construction Not Requiring Sprinklers.

A.8.15.1.2.17 See Figure A.8.15.1.2.17.

A.8.15.2.2 Where practicable, sprinklers should be staggered at the alternate floor levels, particularly where only one sprinkler is installed at each floor level.

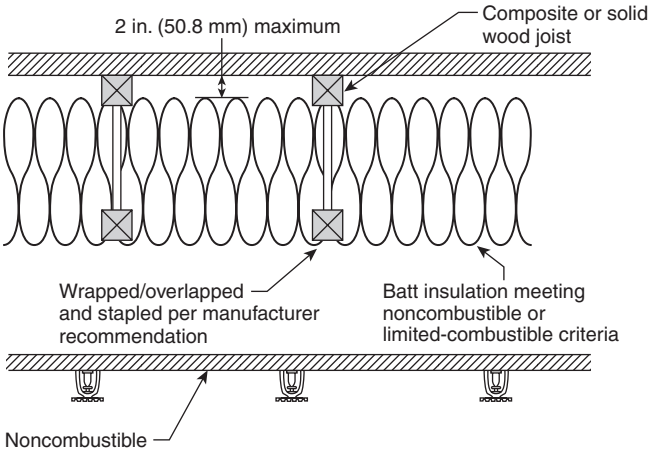

FIGURE A.8.15.1.2.17 Acceptable Arrangement of Concealed Space Not Requiring Sprinklers.

A.8.15.3.1.2 Sprinklers at each floor level landing should be positioned to protect both the floor level landing and any intermediate landing.

A.8.15.3.3 See Figure A.8.15.3.3(a) and Figure A.8.15.3.3(b). Sprinklers would be required in the case shown in Figure A.8.15.3.3(a) but not in the case shown in Figure A.8.15.3.3(b).

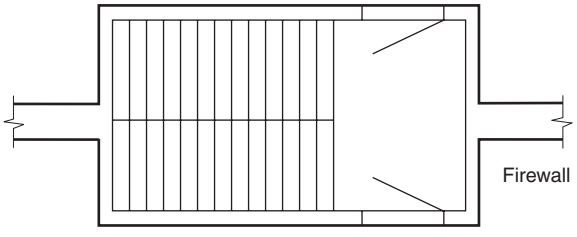

FIGURE A.8.15.3.3(a) Noncombustible Stair Shaft Serving Two Sides of Fire Wall.

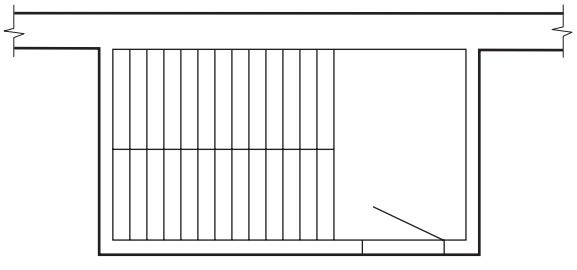

FIGURE A.8.15.3.3(b) Noncombustible Stair Shaft Serving One Side of Fire Wall.

A.8.15.4 Where sprinklers in the normal ceiling pattern are closer than 6 ft (1.86 m) from the water curtain, it might be preferable to locate the water curtain sprinklers in recessed baffle pockets. *(See Figure A.8.15.4.)*

Copyright 2014 National Fire Protection Association (NFPA). Licensed, by agreement, for individual use and download on October 4, 2014 to LEADER and READER for designated user PATTARAPORN SRITRAKOOL. No other reproduction or transmission in any form permitted without written permission of NFPA. For inquires or to report unauthorized use, contact licensing@nfpa.org.

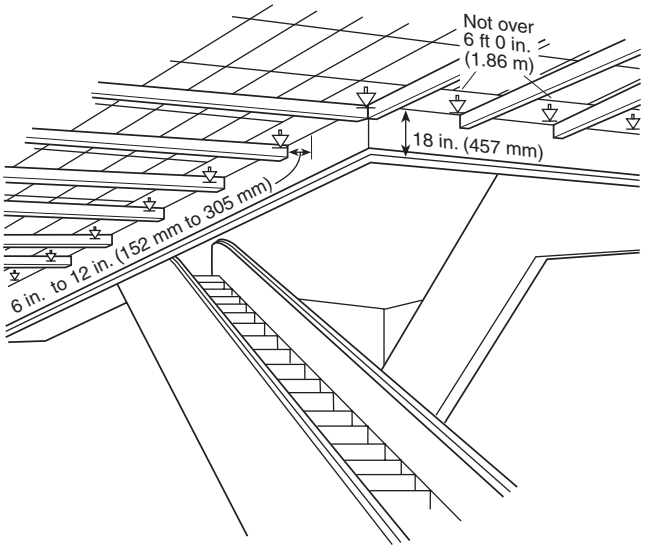

FIGURE A.8.15.4 Sprinklers Around Escalators.

A.8.15.4.1 It is the intent of this section to require closely spaced sprinklers and draft stops to openings where protection or enclosure is required by building and life safety codes.

A.8.15.5.1 The sprinklers in the pit are intended to protect against fires caused by debris, which can accumulate over time. Ideally, the sprinklers should be located near the side of the pit below the elevator doors, where most debris accumulates. However, care should be taken that the sprinkler location does not interfere with the elevator toe guard, which extends below the face of the door opening.

A.8.15.5.4 ASME A17.1, *Safety Code for Elevators and Escalators*, requires the shutdown of power to the elevator upon or prior to the application of water in elevator machine rooms or hoistways. This shutdown can be accomplished by a detection system with sufficient sensitivity that operates prior to the activation of the sprinklers *(see also NFPA 72)*. As an alternative, the system can be arranged using devices or sprinklers capable of effecting power shutdown immediately upon sprinkler activation, such as a waterflow switch without a time delay. This alternative arrangement is intended to interrupt power before significant sprinkler discharge.

A.8.15.5.5 Passenger elevator cars that have been constructed in accordance with ASME A17.1, *Safety Code for Elevators and Escalators,* Rule 204.2a (under A17.1a-1985 and later editions of the code) have limited combustibility. Materials exposed to the interior of the car and the hoistway, in their end-use composition, are limited to a flame spread index of 0 to 75 and a smoke-developed index of 0 to 450, when tested in accordance with ASTM E 84, *Standard Test Method of Surface Burning Characteristics of Building Materials.*

A.8.15.7 Small loading docks, covered platforms, ducts, or similar small unheated areas can be protected by dry pendent sprinklers extending through the wall from wet sprinkler piping in an adjacent heated area. Where protecting covered platforms, loading docks, and similar areas, a dry pendent sprinkler should extend down at a 45 degree angle. The width of the area to be protected should not exceed 7½ ft (2.3 m). Sprinklers should be spaced not over 12 ft (3.7 m) apart. Exterior projections include, but are not limited to, exterior roofs, canopies, porte-cocheres, balconies, decks, or similar projections. *(See Figure A.8.15.7.)*

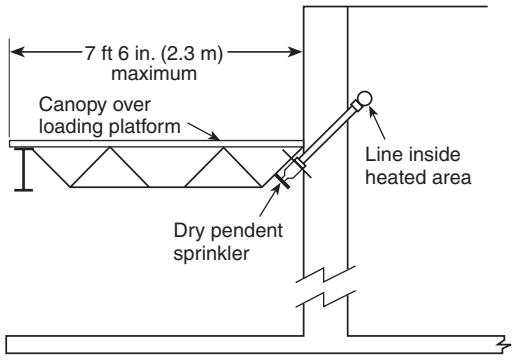

FIGURE A.8.15.7 Dry Pendent Sprinklers for Protection of Covered Platforms, Loading Docks, and Similar Areas.

A.8.15.7.2 Vehicles that are temporarily parked are not considered storage. Areas located at drive-in bank windows or porte-cocheres at hotels and motels normally do not require sprinklers where there is no occupancy above, where the area is entirely constructed of noncombustible or limited-combustible materials or fire retardant–treated lumber, and where the area is not the only means of egress. However, areas under exterior ceilings where the building is sprinklered should be protected due to the occupancy above.

A.8.15.7.5 Short-term transient storage, such as that for delivered packages, and the presence of planters, newspaper machines, and so forth, should not be considered for storage or handling of combustibles. The presence of combustible furniture on balconies for occupant use should not require sprinkler protection.

A.8.15.8.1.1 A door is not required in order to omit sprinklers as long as the bathroom complies with the definition for compartment.

A.8.15.8.2 Portable wardrobe units, such as those typically used in nursing homes and mounted to the wall, do not require sprinklers to be installed in them. Although the units are attached to the finished structure, this standard views those units as pieces of furniture rather than as a part of the structure; thus, sprinklers are not required.

A.8.15.9 This exception is limited to hospitals as nursing homes, and many limited-care facilities can have more combustibles within the closets. The limited amount of clothing found in the small clothes closets in hospital patient rooms is typically far less than the amount of combustibles in casework cabinets that do not require sprinkler protection, such as nurse servers. In many hospitals, especially new hospitals, it is difficult to make a distinction between clothes closets and cabinet work. The exception is far more restrictive than similar exceptions for hotels and apartment buildings. NFPA 13 already permits the omission of sprinklers in wardrobes *[see 8.1.1(7)]*. It is not the intent of this paragraph to affect the wardrobe provisions of NFPA 13. It is the intent that the sprinkler protection in the room covers the closet as if there was no door on the closet *(see 8.5.3.2)*.

A.8.15.10 Library stacks are high-density book storage areas and should not be confused with the typical library book-

Copyright 2014 National Fire Protection Association (NFPA). Licensed, by agreement, for individual use and download on October 4, 2014 to LEADER and READER for designated user PATTARAPORN SRITRAKOOL. No other reproduction or transmission in any form permitted without written permission of NFPA. For inquires or to report unauthorized use, contact licensing@nfpa.org.

shelves and aisles in the general browsing areas. Examples of record storage include medical or paper records.

A.8.15.12 The combustible materials present inside industrial ovens and furnaces can be protected by automatic sprinklers. Wet sprinkler systems are preferred. However, water-filled piping exposed to heat within an oven or furnace can incur deposition and buildup of minerals within the pipe. If the oven or furnace could be exposed to freezing temperatures, dry pendent sprinklers are an alternative to wet pipe systems. Another option is to use a dry pipe system.

The preferred arrangement for piping is outside of the oven; the sprinkler should be installed in the pendent position. The sprinkler temperature rating should be at least 50°F (28°C) greater than the high-temperature limit setting of the oven or applicable zone. As a minimum, the sprinkler system inside the oven or furnace should be designed to provide 15 psi (1 bar) with all sprinklers operating inside the oven/furnace. Sprinkler spacing on each branch line should not exceed 12 ft (3.7 m).

A.8.15.14 The installation of open-grid egg crate, louver, or honeycomb ceilings beneath sprinklers restricts the sideways travel of the sprinkler discharge and can change the character of discharge.

A.8.15.15.4 Drop-out ceilings do not provide the required protection for soft-soldered copper joints or other piping that requires protection.

A.8.15.15.5 The ceiling tiles might drop before sprinkler operation. Delayed operation might occur because heat must then bank down from the deck above before sprinklers will operate.

A.8.15.16.2 For tests of sprinkler performance in fur vaults, see "Fact Finding Report on Automatic Sprinkler Protection for Fur Storage Vaults" of Underwriters Laboratories Inc., dated November 25, 1947.

Sprinklers should be listed old-style with orifice sizes selected to provide a flow rate as close as possible to, but not less than, 20 gpm (76 L/min) per sprinkler, for four sprinklers, based on the water pressure available.

Sprinklers in fur storage vaults should be located centrally over the aisles between racks and should be spaced not over 5 ft (1.5 m) apart along the aisles.

Where sprinklers are spaced 5 ft (1.5 m) apart along the sprinkler branch lines, pipe sizes should be in accordance with the following schedule:

1 in. (25 mm) — 4 sprinklers
1¼ in. (32 mm) — 6 sprinklers
1½ in. (40 mm) — 10 sprinklers
2 in. (50 mm) — 20 sprinklers
2½ in. (65 mm) — 40 sprinklers
3 in. (80 mm) — 80 sprinklers

A.8.15.20.1 Outlets meeting the requirements of this standard should be provided in anticipation of the final finished area.

A.8.15.20.2 Providing 1 in. (25 mm) minimum outlets with bushings can provide for future changes in building uses or occupancies.

A.8.15.20.5.2 It is not the intent of this section to require a full hydraulic analysis of the existing piping system in addition to new sprinkler layout.

A.8.15.22 See Figure A.8.15.22.

A.8.15.23.3 See Figure A.8.15.23.3.

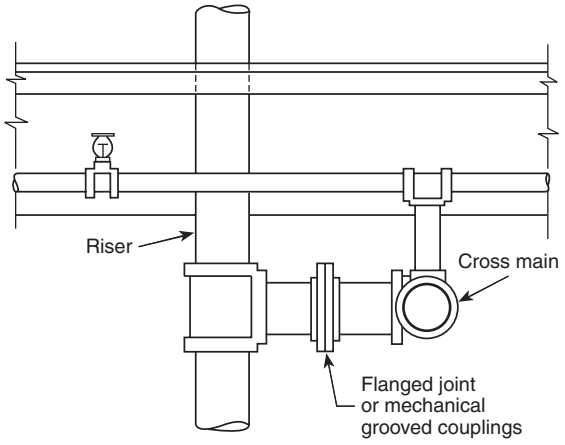

FIGURE A.8.15.22 One Arrangement of Flanged Joint at Sprinkler Riser.

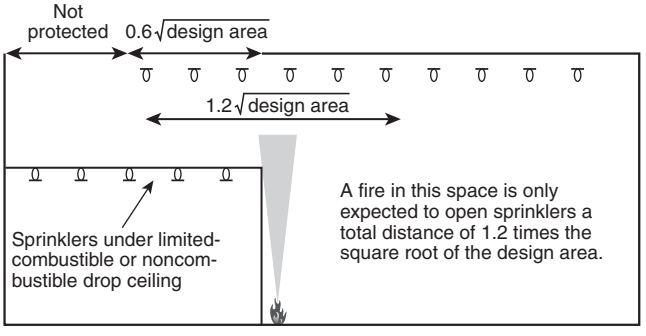

FIGURE A.8.15.23.3 Extension of Sprinkler System Above Drop Ceiling.

A.8.16.1.1 See Figure A.8.16.1.1.

A.8.16.1.1.1 A water supply connection should not extend into a building or through a building wall unless such connection is under the control of an outside listed indicating valve or an inside listed indicating valve located near the outside wall of the building.

All valves controlling water supplies for sprinkler systems or portions thereof, including floor control valves, should be accessible to authorized persons during emergencies. Permanent ladders, clamped treads on risers, chain-operated hand wheels, or other accepted means should be provided where necessary.

Outside control valves are suggested in the following order of preference:

(1) Listed indicating valves at each connection into the building at least 40 ft (12.2 m) from buildings if space permits
(2) Control valves installed in a cutoff stair tower or valve room accessible from outside
(3) Valves located in risers with indicating posts arranged for outside operation
(4) Key-operated valves in each connection into the building

A.8.16.1.1.2 The management is responsible for the supervision of valves controlling water supply for fire protection and should exert every effort to see that the valves are maintained

Copyright 2014 National Fire Protection Association (NFPA). Licensed, by agreement, for individual use and download on October 4, 2014 to LEADER and READER for designated user PATTARAPORN SRITRAKOOL. No other reproduction or transmission in any form permitted without written permission of NFPA. For inquires or to report unauthorized use, contact licensing@nfpa.org.

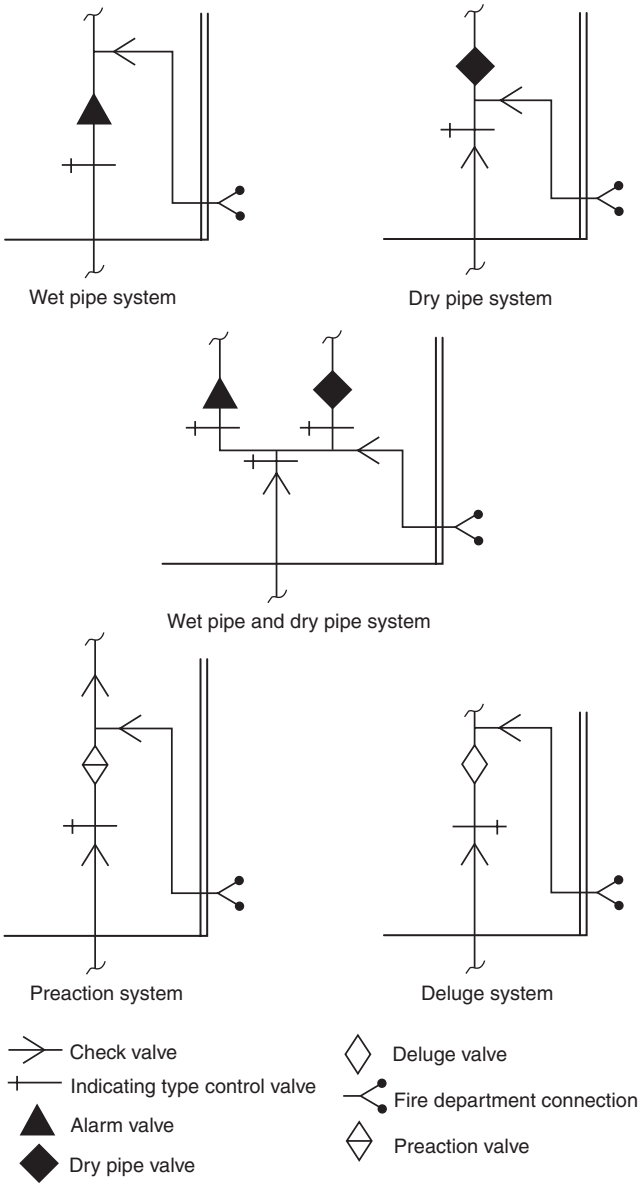

FIGURE A.8.16.1.1 Examples of Acceptable Valve Arrangements.

in the normally open position. This effort includes special precautions to ensure that protection is promptly restored by completely opening valves that are necessarily closed during repairs or alterations. The precautions apply equally to valves controlling sprinklers and other fixed water-based fire suppression systems, hydrants, tanks, standpipes, pumps, street connections, and sectional valves.

Either one or a combination of the methods of valve supervision described in the following list is considered essential to ensure that the valves controlling fire protection systems are in the normally open position. The methods described are intended as an aid to the person responsible for developing a systematic method of determining that the valves controlling sprinkler systems and other fire protection devices are open.

Continual vigilance is necessary if valves are to be kept in the open position. Responsible day and night employees should be familiar with the location of all valves and their proper use.

The authority having jurisdiction should be consulted as to the type of valve supervision required. Contracts for equipment should specify that all details are to be subject to the approval of the authority having jurisdiction.

(1) *Central Station Supervisory Service.* Central station supervisory service systems involve complete, constant, and automatic supervision of valves by electrically operated devices and circuits continually under test and operating through an approved outside central station, in compliance with *NFPA 72*. It is understood that only such portions of *NFPA 72* that relate to valve supervision should apply.

(2) *Proprietary Supervisory Service Systems.* Proprietary supervisory service systems include systems where the operation of a valve produces some form of signal and record at a common point by electrically operated devices and circuits continually under test and operating through a central supervising station at the property protected, all in compliance with the standards for the installation, maintenance, and use of local protective, auxiliary protective, remote station protective, and proprietary signaling systems. It is understood that only portions of the standards that relate to valve supervision should apply.

The standard method of locking, sealing, and tagging valves to prevent, so far as possible, their unnecessary closing, to obtain notification of such closing, and to aid in restoring the valve to normal condition is a satisfactory alternative to valve supervision. The authority having jurisdiction should be consulted regarding details for specific cases.

Where electrical supervision is not provided, locks or seals should be provided on all valves and should be of a type acceptable to the authority having jurisdiction.

Seals can be marked to indicate the organization under whose jurisdiction the sealing is conducted. All seals should be attached to the valve in such a manner that the valves cannot be operated without breaking the seals. Seals should be of a character to prevent injury in handling and to prevent reassembly when broken. When seals are used, valves should be inspected weekly. The authority having jurisdiction can require a valve tag to be used in conjunction with the sealing.

A padlock, with a chain where necessary, is especially desirable to prevent unauthorized closing of valves in areas where valves are subject to tampering. When such locks are employed, valves should be inspected monthly.

If valves are locked, any distribution of keys should be restricted to only those directly responsible for the fire protection system. Multiple valves should not be locked together; they should be individually locked.

The individual performing the inspections should determine that each valve is in the normal position, properly locked or sealed, and so note on an appropriate record form while still at the valve. The authority having jurisdiction should be consulted for assistance in preparing a suitable report form for this activity.

Identification signs should be provided at each valve to indicate its function and what it controls.

The position of the spindle of OS&Y valves or the target on the indicator valves cannot be accepted as conclusive proof that the valve is fully open. The opening of the valve should be followed by a test to determine that the operating parts have functioned properly.

Copyright 2014 National Fire Protection Association (NFPA). Licensed, by agreement, for individual use and download on October 4, 2014 to LEADER and READER for designated user PATTARAPORN SRITRAKOOL. No other reproduction or transmission in any form permitted without written permission of NFPA. For inquires or to report unauthorized use, contact licensing@nfpa.org.

The test consists of opening the main drain valve and permitting free flow of water until the gauge reading becomes stationary. If the pressure drop is excessive for the water supply involved, the cause should be determined immediately and the proper remedies taken. When sectional valves or other special conditions are encountered, other methods of testing should be used.

If it becomes necessary to break a seal for emergency reasons, the valve, following the emergency, should be opened by the person responsible for the fire protection of the plant, or his or her designated representative, and this person should apply a seal at the time of the valve opening. This seal should be maintained in place until such time as the authority having jurisdiction can replace it with one of its own.

Seals or locks should not be applied to valves reopened after closure until such time as the inspection procedure is carried out.

Where water is shut off to the sprinkler or other fixed water-based fire suppression systems, a guard or other qualified person should be placed on duty and required to continuously patrol the affected sections of the premises until such time as protection is restored.

During specific critical situations, a person should be stationed at the valve so that the valve can be reopened promptly if necessary. It is the intent of this section that the person remain within sight of the valve and have no other duties beyond this responsibility. This procedure is considered imperative when fire protection is shut off immediately following a fire.

An inspection of all other fire protection equipment should be made prior to shutting off water in order to make sure it is in operative condition.

In case of changes to fire protection equipment, all possible work should be done in advance of shutting off the water so that final connections can be made quickly and protection restored promptly. Many times it will be found that by careful planning open outlets can be plugged and protection restored on a portion of the equipment while the alterations are being made.

Where changes are being made in underground piping, all possible piping should be laid before shutting off the water for final connections. Where possible, temporary feed lines, such as temporary piping for reconnection of risers by hose lines, and so forth, should be used to afford maximum protection. The plant, public fire department, and other authorities having jurisdiction should be notified of all impairments to fire protection equipment.

A.8.16.1.1.3 Where check valves are buried, they should be made accessible for maintenance. This can be accomplished by a valve pit or any means that renders the valve accessible. See Figure A.8.16.1.1.4.

A.8.16.1.1.3.5 Where a system having only one dry pipe valve is supplied with city water and a fire department connection, it will be satisfactory to install the main check valve in the water supply connection immediately inside of the building. In instances where there is no outside control valve, the system indicating valve should be placed at the service flange, on the supply side of all fittings.

A.8.16.1.1.4 See Figure A.8.16.1.1.4. For additional information on controlling valves, see NFPA 22.

A.8.16.1.1.5 For additional information on controlling valves, see NFPA 22.

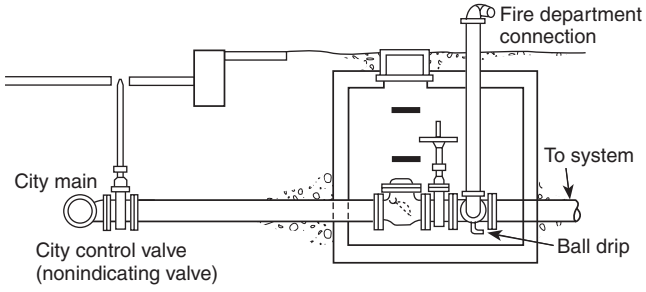

FIGURE A.8.16.1.1.4 Pit for Gate Valve, Check Valve, and Fire Department Connection.

A.8.16.1.1.6 Check valves on tank or pump connections, when located underground, can be placed inside of buildings and at a safe distance from the tank riser or pump, except in cases where the building is entirely of one fire area, when it is ordinarily considered satisfactory to locate the check valve overhead in the lowest level.

A.8.16.1.1.7 It might be necessary to provide valves located in pits with an indicator post extending above grade or other means so that the valve can be operated without entering the pit.

A.8.16.1.2.3 Where the relief valve operation would result in water being discharged onto interior walking or working surfaces, consideration should be given to piping the discharge from the valve to a drain connection or other safe location.

A.8.16.1.3 Outside control valves are suggested in the following order of preference:

(1) Listed indicating valves at each connection into the building at least 40 ft (12.2 m) from buildings if space permits
(2) Control valves installed in a cutoff stair tower or valve room accessible from outside
(3) Valves located in risers with indicating posts arranged for outside operation
(4) Key-operated valves in each connection into the building

Post-indicator valves should be located not less than 40 ft (12.2 m) from buildings. When post-indicator valves cannot be placed at this distance, they are permitted to be located closer, or wall post-indicator valves can be used, provided they are set in locations by blank walls where the possibility of injury by falling walls is unlikely and from which people are not likely to be driven by smoke or heat. Usually, in crowded plant yards, they can be placed beside low buildings, near brick stair towers, or at angles formed by substantial brick walls that are not likely to fall.

A.8.16.1.4.2 A valve wrench with a long handle should be provided at a convenient location on the premises.

A.8.16.1.5.1 It is not the intent of this section to require floor control valve assemblies in all multistory buildings. Where small buildings such as multilevel condominiums or apartments are under the control of a single owner or management firm, a single control valve should be adequate for isolation, control, and annunciation of water flow.

A.8.16.1.6 In-rack sprinklers and ceiling sprinklers selected for protection should be controlled by at least two separate indicating valves and drains. In higher rack arrangements, consideration should be given to providing more than one

Copyright 2014 National Fire Protection Association (NFPA). Licensed, by agreement, for individual use and download on October 4, 2014 to LEADER and READER for designated user PATTARAPORN SRITRAKOOL. No other reproduction or transmission in any form permitted without written permission of NFPA. For inquires or to report unauthorized use, contact licensing@nfpa.org.

in-rack control valve in order to limit the extent of any single impairment.

A.8.16.2.1 All piping should be arranged where practicable to drain to the main drain valve.

A.8.16.2.4 Figure A.8.16.2.4(a) is an example of an unacceptable arrangement. Because it will not give a true residual reading, it will indicate an excessive pressure drop.

Figure A.8.16.2.4(b) is an example of an acceptable drain connection for a system riser.

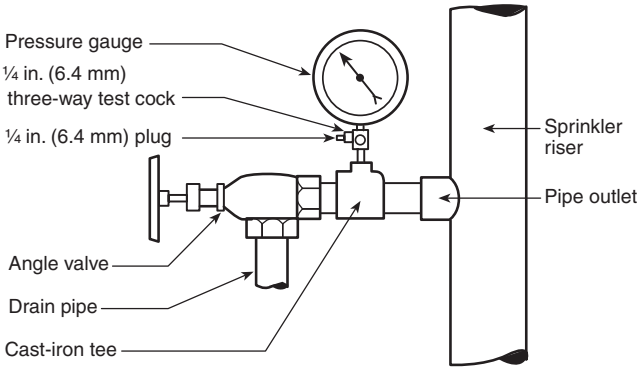

FIGURE A.8.16.2.4(a) Unacceptable Pressure Gauge Location.

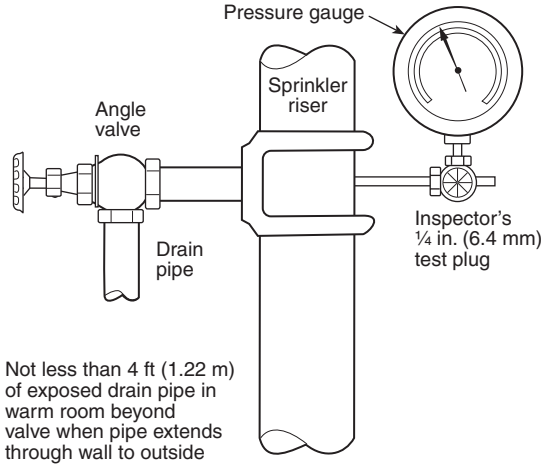

FIGURE A.8.16.2.4(b) Drain Connection for System Riser.

A.8.16.2.4.1 Provisions should include vents at the top of drain risers in buildings more than six stories in height. An elbow near the top of the drain riser with a horizontal check valve facing in toward the system would be one acceptable arrangement. A check valve at the top of the drain riser would allow air into the drain riser and break any vacuum created by a standing column.

A.8.16.2.5.2.1 An example of an accessible location would be a valve located approximately 7 ft (2 m) above the floor level to which a hose could be connected to discharge the water in an acceptable manner.

A.8.16.2.5.3.5 The requirements of 8.16.2.5.3.4 should not apply since there is no water condensate to collect. Moisture inside the pipe will freeze when located in areas that maintain a freezing temperature.

A.8.16.2.6.1 Where possible, the main sprinkler riser drain should discharge outside the building at a point free from the possibility of causing water damage. Where it is not possible to discharge outside the building wall, the drain should be piped to a sump, which in turn should discharge by gravity or be pumped to a wastewater drain or sewer. The main sprinkler riser drain connection should be of a size sufficient to carry off water from the fully open drain valve while it is discharging under normal water system pressures. Where this is not possible, a supplementary drain of equal size should be provided for test purposes with free discharge, located at or above grade.

A.8.16.4.1.1 Water-filled piping can be run in spaces above heated room, such as attics, even if the space above the room is not heated itself. Insulation can be located above the pipe to trap the heat from below and prevent the pipe from freezing. It is important not to bury the piping in the insulation because if too much insulation ends up between the pipe and the heated space, the insulation will prevent the heat from getting to the pipe. This method of protecting the pipe is acceptable to this standard.

A.8.16.4.2 Where approved, the pipe identification can be covered with paint or other protective coatings before installation.

A.8.16.4.2.1 Types of locations where corrosive conditions can exist include bleacheries, dye houses, metal plating processes, animal pens, and certain chemical plants.

If corrosive conditions are not of great intensity and humidity is not abnormally high, good results can be obtained by a protective coating of red lead and varnish or by a good grade of commercial acid-resisting paint. The paint manufacturer's instructions should be followed in the preparation of the surface and in the method of application.

Where moisture conditions are severe but corrosive conditions are not of great intensity, copper tube or galvanized steel pipe, fittings, and hangers might be suitable. The exposed threads of steel pipe should be painted.

In instances where the piping is not accessible and where the exposure to corrosive fumes is severe, either a protective coating of high quality can be employed or some form of corrosion-resistant material used.

A.8.16.4.2.2 A manual or automatic air venting valve can be a reasonable approach on wet pipe sprinkler systems to reduce corrosion activity. The purpose of the air venting valve is to exhaust as much trapped air as possible from a single location every time the system is filled. The objective of venting is to reduce the amount of oxygen trapped in the system that will fuel corrosion and microbial activity. It is neither the intent nor practical to exhaust all trapped air from a single location on a wet pipe sprinkler system; however, more than one vent can be used on a system at the designer's discretion. Interconnection of branch line piping for venting purposes is not necessary. An inspector's test valve can serve this purpose.

The air venting valve should be located where it will be most effective. System piping layout will guide the designer in choosing an effective location for venting. In order to effectively accomplish venting, it is necessary to choose a location where the greatest volume of trapped air is vented during the first fill and each subsequent drain and fill event. The vent connection to the system should be located off the top of hori-

Copyright 2014 National Fire Protection Association (NFPA). Licensed, by agreement, for individual use and download on October 4, 2014 to LEADER and READER for designated user PATTARAPORN SRITRAKOOL. No other reproduction or transmission in any form permitted without written permission of NFPA. For inquires or to report unauthorized use, contact licensing@nfpa.org.

zontal piping at a high point in the system; however, the vent connection can also be effectively located off the side of a riser or riser nipple at a high point in the system.

Manual air venting valves should be accessible. The manual air venting valve should be located at an accessible point and preferably not over 7 ft (2 m) above the floor. Automatic air valves are not required to comply with the accessibility requirement of manual air venting valves; however, it is recommended the designer locate automatic air vents over areas without ceilings, above a lay-in ceiling, or above an access panel.

Each wet pipe sprinkler system should be vented every time the system is filled.

A.8.16.4.3 Protection should be provided in any area of a structure or building that poses a degree of hazard greater than that normal to the general occupancy of the building or structure. These areas include areas for the storage or use of combustibles or flammables; toxic, noxious, or corrosive materials; and heat-producing appliances.

A.8.17.1 Central station, auxiliary, remote station, or proprietary protective signaling systems are a highly desirable supplement to local alarms, especially from a safety to life standpoint. *(See 8.17.1.6.)*

Approved identification signs, as shown in Figure A.8.17.1, should be provided for outside alarm devices. The sign should be located near the device in a conspicuous position and should be worded as follows:

SPRINKLER FIRE ALARM — WHEN BELL RINGS
CALL FIRE DEPARTMENT OR POLICE.



FIGURE A.8.17.1 Identification Sign.

A.8.17.1.5 Water motor-operated devices should be located as near as practicable to the alarm valve, dry pipe valve, or other waterflow detection device. The total length of the pipe to these devices should not exceed 75 ft (22.9 m), nor should the water motor-operated device be located over 20 ft (6.1 m) above the alarm device or dry pipe valve.

A.8.17.1.6 Monitoring should include but not be limited to control valves, building temperatures, fire pump power supplies and running conditions, and water tank levels and temperatures. Pressure supervision should also be provided on pressure tanks.

Check valves can be required to prevent false waterflow signals on floors where sprinklers have not activated — for example, floor systems interconnected to two supply risers.

A.8.17.2 The fire department connection should be located not less than 18 in. (457 mm) and not more than 4 ft (1.2 m) above the level of the adjacent grade or access level.

Typical fire department connections are shown in Figure A.8.17.2(a) and Figure A.8.17.2(b). See NFPA 13E.

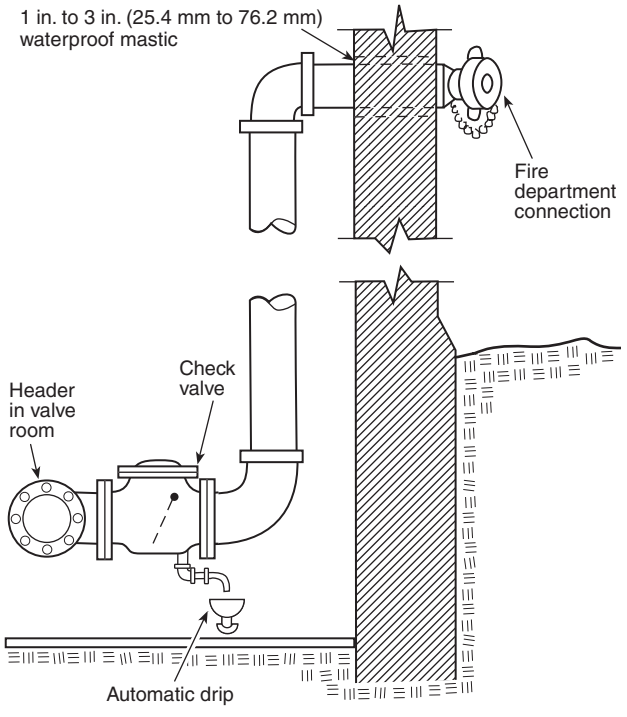

FIGURE A.8.17.2(a) Fire Department Connection.

A.8.17.2.1 Fire department connections should be located and arranged so that hose lines can be readily and conveniently attached without interference from nearby objects, including buildings, fences, posts, or other fire department connections. Where a hydrant is not available, other water supply sources such as a natural body of water, a tank, or a reservoir should be utilized. The water authority should be consulted when a nonpotable water supply is proposed as a suction source for the fire department.

A.8.17.2.3 The purpose of a fire department connection is to supplement the pressure to an automatic fire sprinkler system. It is not the intent to size the fire department connection piping based on system demand. For multiple system risers supplied by a manifold, the fire department connection need not be larger than that for an individual system.

A.8.17.2.4 The check valve should be located to maximize accessibility and minimize freezing potential. It is recommended that the check valve be located to reduce the length of nonpressurized pipe in the fire department connection supply line.

A.8.17.2.4.1 The fire department connection should be connected to the system riser. For single systems, it is an acceptable arrangement to attach the fire department connection to any point in the system, provided the pipe size meets the requirements of 8.17.2.3.

Copyright 2014 National Fire Protection Association (NFPA). Licensed, by agreement, for individual use and download on October 4, 2014 to LEADER and READER for designated user PATTARAPORN SRITRAKOOL. No other reproduction or transmission in any form permitted without written permission of NFPA. For inquires or to report unauthorized use, contact licensing@nfpa.org.

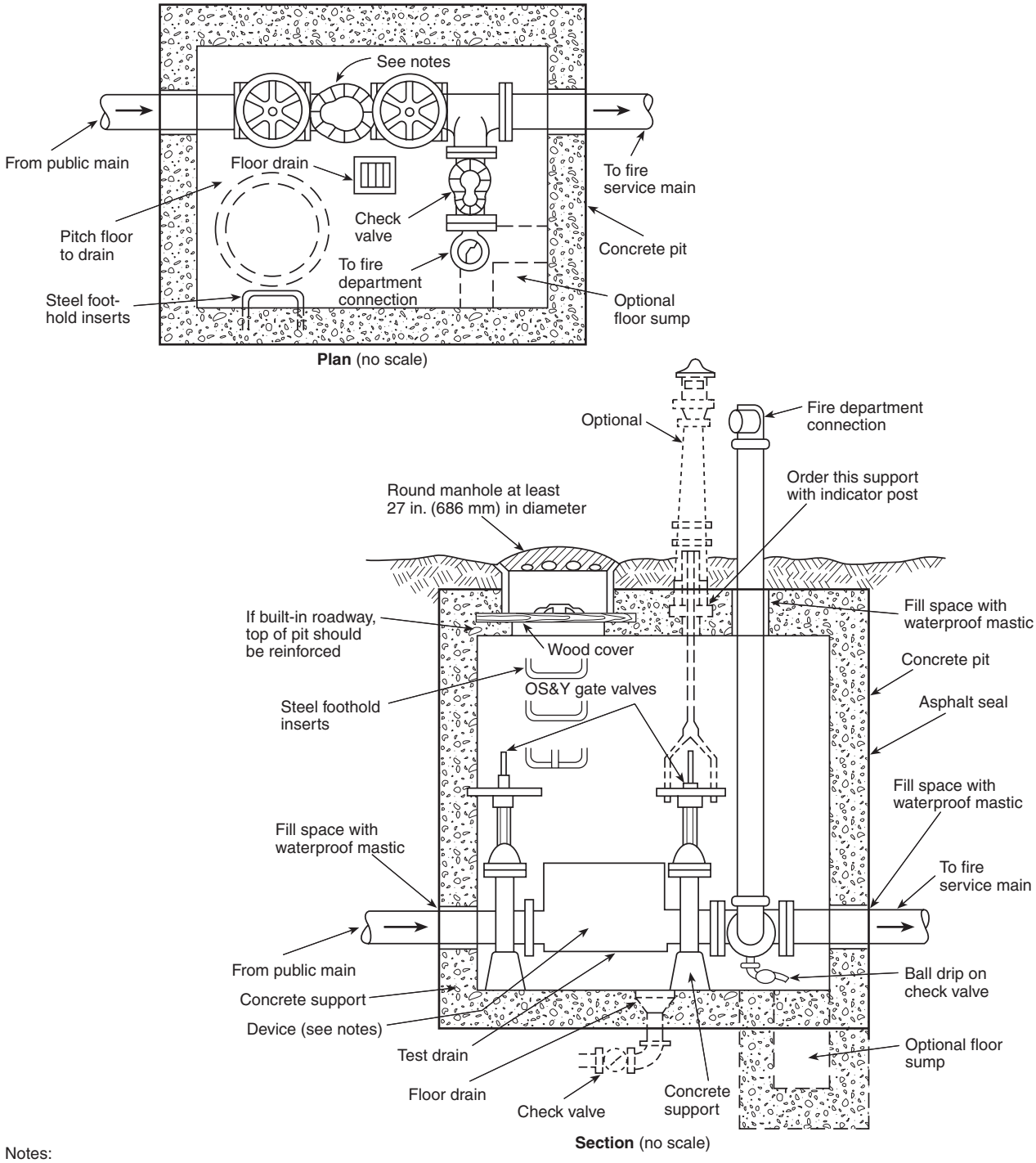

Notes:

1. Various backflow prevention regulations accept different devices at the connection between public water mains and private fire service mains.
2. The device shown in the pit could be any or a combination of the following:
   (a) Gravity check valve
   (b) Detector check valve
   (c) Double check valve assembly
   (d) Reduced pressure zone (RPZ) device
   (e) Vacuum breaker
3. Some backflow prevention regulations prohibit these devices from being installed in a pit.
4. In all cases, the device(s) in the pit should be approved or listed as necessary. The requirements of the local or municipal water department should be reviewed prior to design or installation of the connection.
5. Pressure drop should be considered prior to the installation of any backflow prevention devices.

FIGURE A.8.17.2(b) Typical City Water Pit — Valve Arrangement.

Copyright 2014 National Fire Protection Association (NFPA). Licensed, by agreement, for individual use and download on October 4, 2014 to LEADER and READER for designated user PATTARAPORN SRITRAKOOL. No other reproduction or transmission in any form permitted without written permission of NFPA. For inquires or to report unauthorized use, contact licensing@nfpa.org.

A.8.17.2.4.4 Figure A.8.17.2.4.4(a) and Figure A.8.17.2.4.4(b) depict fire department connections to the underground pipe.

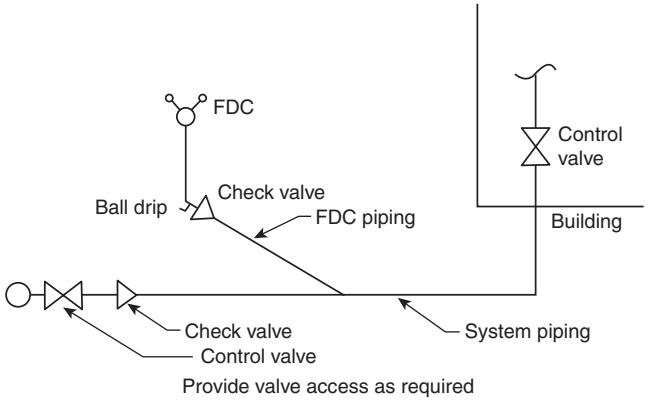

FIGURE A.8.17.2.4.4(a) Fire Department Connection Connected to Underground Piping (Sample 1).

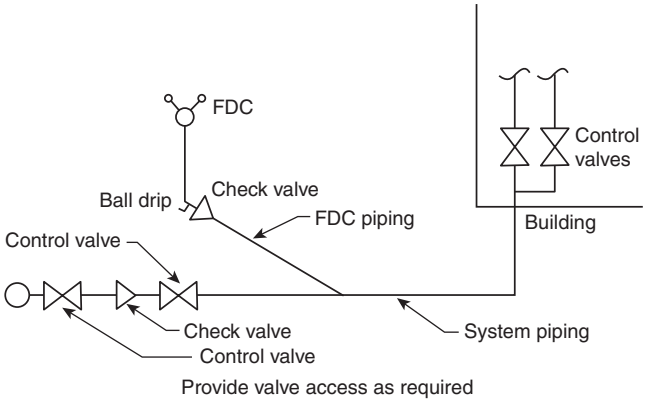

FIGURE A.8.17.2.4.4(b) Fire Department Connection Connected to Underground Piping (Sample 2).

A.8.17.2.4.6 Obstructions to fire department connections include but are not limited to buildings, fences, posts, shrubbery, other fire department connections, gas meters, and electrical equipment.

A.8.17.2.6 In cases where water in the piping between the system side and the fire department connection check valve would be trapped, an auxiliary drain is required.

A.8.17.4.1 See Figure A.8.17.4.1.

A.8.17.4.2 The purpose of this alarm test connection is to make sure the alarm device is sensitive enough to determine the flow from a single sprinkler and sound an alarm. The purpose of this test connection is not to ensure that water will flow through the entire system.

When this test connection is installed on the upper story, and at the end of the most remote branch line, the user is able to tell that there is water flowing in one path through the system, but there is no assurance that water will flow to other branch lines. Putting the test connection at the most remote portion of the system causes the introduction of fresh oxygen

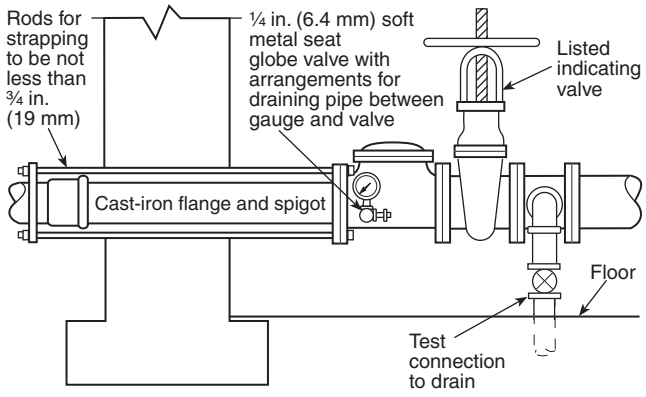

FIGURE A.8.17.4.1 Water Supply Connection with Test Connection.

into a large part of the system each time the alarm is tested and increases the corrosion that will occur in the piping.

The discharge should be at a point where it can be readily observed. In locations where it is not practical to terminate the test connection outside the building, the test connection is permitted to terminate into a drain capable of accepting full flow under system pressure. In this event, the test connection should be made using an approved sight test connection containing a smooth bore corrosion-resistant orifice giving a flow equivalent to one sprinkler simulating the least flow from an individual sprinkler in the system. *[See Figure A.8.17.4.2(a) and Figure A.8.17.4.2(b).]* The test valve should be located at an accessible point and preferably not over 7 ft (2.1 m) above the floor. The control valve on the test connection should be located at a point not exposed to freezing.

A.8.17.4.3 See Figure A.8.17.4.3 and Figure A.7.2.3.7.

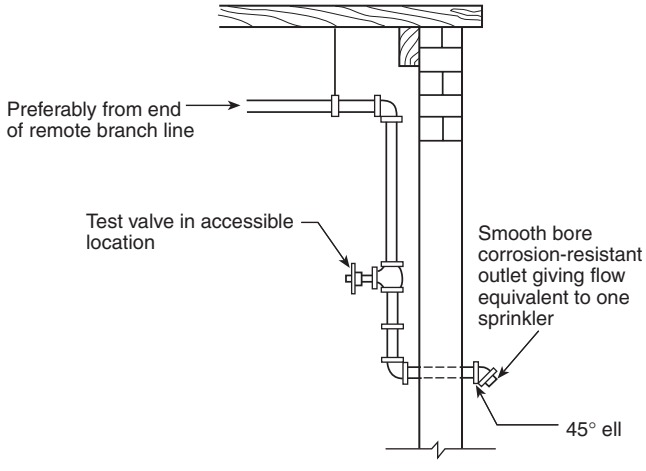

Elevation

Note: Not less than 4 ft (1.2 m) of exposed test pipe in warm room beyond valve where pipe extends through wall to outside.

FIGURE A.8.17.4.2(a) System Test Connection on Wet Pipe System.

Copyright 2014 National Fire Protection Association (NFPA). Licensed, by agreement, for individual use and download on October 4, 2014 to LEADER and READER for designated user PATTARAPORN SRITRAKOOL. No other reproduction or transmission in any form permitted without written permission of NFPA. For inquires or to report unauthorized use, contact licensing@nfpa.org.

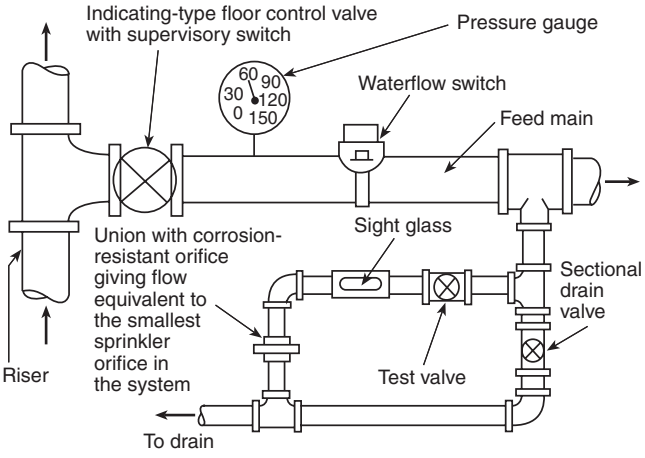

FIGURE A.8.17.4.2(b) Floor Control Valve.

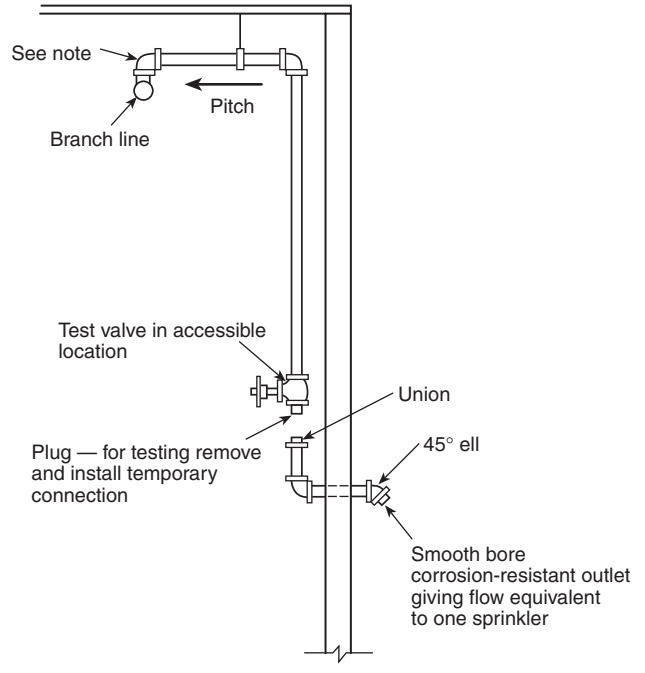

Note: To minimize condensation of water in the drop to the test connection, provide a nipple-up off of the branch line.

FIGURE A.8.17.4.3 System Test Connection on Dry Pipe System.

A.8.17.4.6 Where backflow prevention devices are installed, they should be in an accessible location to provide for service and maintenance.

A.8.17.4.6.1 The full flow test of the backflow prevention valve can be performed with a test header or other connection downstream of the valve. A bypass around the check valve in the fire department connector line with a control valve in the normally closed position can be an acceptable arrangement. When flow to a visible drain cannot be accomplished, closed loop flow can be acceptable if a flowmeter or site glass is incorporated into the system to ensure flow. When a backflow prevention device is retroactively installed on a pipe schedule system, the revised hydraulic calculation still follows the pipe schedule method of 11.2.2 with the inclusion of friction loss for the device.

A.8.17.5.1.1 One and one-half inch (40 mm) fire hose packs are not required unless designated by the authority having jurisdiction, as it is not likely that such hoses will be adequately maintained for safe use by first responders. Civilian workers who are not properly trained in fire-fighting techniques are expected to evacuate the building in the event of a fire.

A.8.17.5.1.4 This standard covers 1½ in. (40 mm) hose connections for use in storage occupancies and other locations where standpipe systems are not required. Where Class II standpipe systems are required, see the appropriate provisions of NFPA 14 with respect to hose stations and water supply for hose connections from sprinkler systems.

A.8.17.5.2.2 See Figure A.8.17.5.2.2(a) and Figure A.8.17.5.2.2(b).

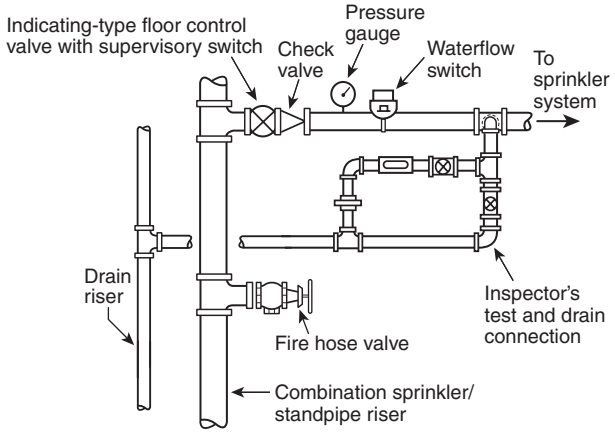

FIGURE A.8.17.5.2.2(a) Acceptable Piping Arrangement for Combined Sprinkler/Standpipe System. [14:Figure A.6.3.5(a)]

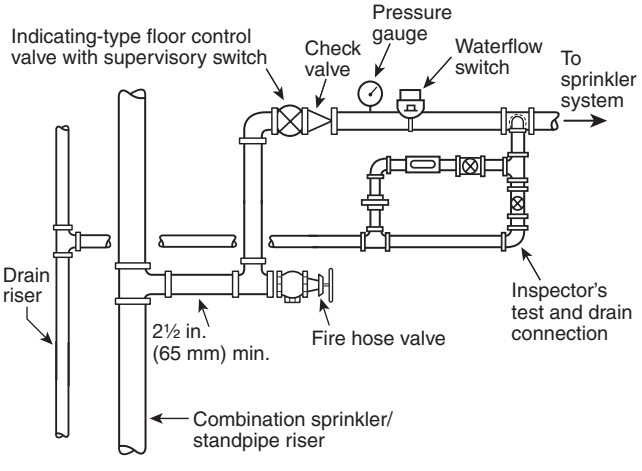

FIGURE A.8.17.5.2.2(b) Acceptable Piping Arrangement for Combined Sprinkler/Standpipe System. [14:Figure A.6.3.5(b)]

Copyright 2014 National Fire Protection Association (NFPA). Licensed, by agreement, for individual use and download on October 4, 2014 to LEADER and READER for designated user PATTARAPORN SRITRAKOOL. No other reproduction or transmission in any form permitted without written permission of NFPA. For inquires or to report unauthorized use, contact licensing@nfpa.org.

A.9.1.1 See Figure A.9.1.1. As an alternative to the conventional method of hanging pipe from the structure using attachments and rod, the piping can be simply laid on the structural member, provided the structure can adequately support the added load in accordance with 9.2.1.3.1 and the maximum distance between supports as required by Chapter 9 is not exceeded. Listed pipe should still be installed and supported in accordance with its listing limitations.

To prevent pipe movement, it should be secured with an approved device to the structure and located to ensure that the system piping remains in its original location and position.

A.9.1.1.3.1 A shared support structure can be in the form of a pipe rack structure, a trapeze assembly, pipe stand, or other similar assembly. It is not the intent of this section for a building structure to be considered a shared support structure. Storage racks are not intended to be considered a shared support structure.

A.9.1.1.3.1.4 It is not the intent of 9.1.1.3.1 to apply to flexible sprinkler hose fittings or ceiling systems.

A.9.1.1.5.2 Generic items utilized with hanger rods and fasteners are not required to be listed. These include items such as bolts, screws, washers, nuts, and lock nuts.

A.9.1.1.5.3 Generic items utilized with hanger rods and fasteners are not required to be listed. These include items such as bolts, screws, washers, nuts, and lock nuts.

A.9.1.1.7 Table 9.1.1.7.1(a) assumes that the load from 15 ft (5 m) of water-filled pipe, plus 250 lb (114 kg), is located at the midpoint of the span of the trapeze member, with a maximum allowable bending stress of 15 ksi (111 kg). If the load is applied at other than the midpoint, for the purpose of sizing the trapeze member, an equivalent length of trapeze can be used, derived from the following formula:

$$L = \frac{4ab}{a+b}$$

where:
L = equivalent length
a = distance from one support to the load
b = distance from the other support to the load

Where multiple mains are to be supported or multiple trapeze hangers are provided in parallel, the required or available section modulus can be added. The table values are based on the trapeze being a single continuous member.

A.9.1.1.7.5 Hanger components are sized based upon an ultimate strength limit of 5 times the weight of water-filled pipe plus 250 lb (114 kg). The section moduli used to size the trapeze member are based on a maximum bending stress, which provides an acceptable level of safety that is comparable to that of the other hanger components.

A.9.1.1.8.1 The rules covering the hanging of sprinkler piping take into consideration the weight of water-filled pipe plus a safety factor. No allowance has been made for the hanging of non-system components from sprinkler piping. NFPA 13 provides the option to support sprinkler piping from other sprinkler piping where the requirements of 9.1.1.2 are met.

A.9.1.2.3(1) Hanger rods are intended only to be loaded axially (along the rod). Lateral loads can result in bending, weakening, and even breaking of the rod. Additional hangers or restraints could be necessary to minimize nonaxial loads that could induce bending or deflection of the rods. See Figure A.9.1.2.3(1) for an example of additional hangers utilized to minimize nonaxial loads.

A.9.1.3 In areas that are subject to provisions for earthquake protection, the fasteners in concrete will need to be prequalified. See 9.3.7.8 for information.

A.9.1.3.9.3 The ability of concrete to hold the studs varies widely according to type of aggregate, quality of concrete, and proper installation.

A.9.1.4.1 Powder-driven studs should not be used in steel of less than 3⁄16 in. (4.8 mm) total thickness.

A.9.2 To enhance permanence, proper hanger installation is important. Installation procedures should meet industry standards of practice and craftsmanship. For example, hanger assemblies are straight, perpendicular to the pipe, uniformly located, and snug to the structure with fasteners fully engaged.

A.9.2.1.1.1 Fasteners used to support sprinkler system piping should not be attached to ceilings of gypsum or other similar soft material.

A.9.2.1.3 The method used to attach the hanger to the structure and the load placed on the hanger should take into account any limits imposed by the structure. Design manual information for pre-engineered structures or other specialty construction materials should be consulted, if appropriate.

System mains hung to a single beam, truss, or purlin can affect the structural integrity of the building by introducing excessive loads not anticipated in the building design. Also, special conditions such as collateral and concentrated load limits, type or method of attachment to the structural components, or location of attachment to the structural components might need to be observed when hanging system piping in pre-engineered metal buildings or buildings using other specialty structural components such as composite wood joists or combination wood and tubular metal joists.

The building structure is only required to handle the weight of the water-filled pipe and components, while the hangers are required to handle 5 times the weight of the water-filled pipe. In addition, a safety factor load of 250 lb (114 kg) is added in both cases. The difference in requirements has to do with the different ways that loads are calculated and safety factors are applied.

When sprinkler system loads are given to structural engineers for calculation of the structural elements in the building, they apply their own safety factors in order to determine what structural members and hanging locations will be acceptable.

In contrast, when sprinkler system loads are calculated for the hangers themselves, there is no explicit safety factor, so NFPA 13 mandates a safety factor of 5 times the weight of the pipe.

A.9.2.1.3.3 Examples of areas of use include cleanrooms, suspended ceilings, and exhaust ducts.

A.9.2.1.3.3.3 The committee evaluation of flexible sprinkler hose fittings supported by suspended ceilings was based on a comparison of the weight of a 6 ft 1 in. (1.8 m) diameter Schedule 40 water-filled unsupported armover weighing approximately 13 lb (5.9 kg) to the weight of a 6 ft 1 in. (1.8 m) diameter water-filled flexible hose fitting weighing approximately 9 lb (4.1 kg). The information provided to the committee showed that the maximum load shed to the suspended ceiling by the flexible hose fitting was approximately 6 lb (2.7 kg) and that a suspended ceiling meeting ASTM C 635, *Standard Specification for the Manufacture, Performance, and*

Copyright 2014 National Fire Protection Association (NFPA). Licensed, by agreement, for individual use and download on October 4, 2014 to LEADER and READER for designated user PATTARAPORN SRITRAKOOL. No other reproduction or transmission in any form permitted without written permission of NFPA. For inquires or to report unauthorized use, contact licensing@nfpa.org.

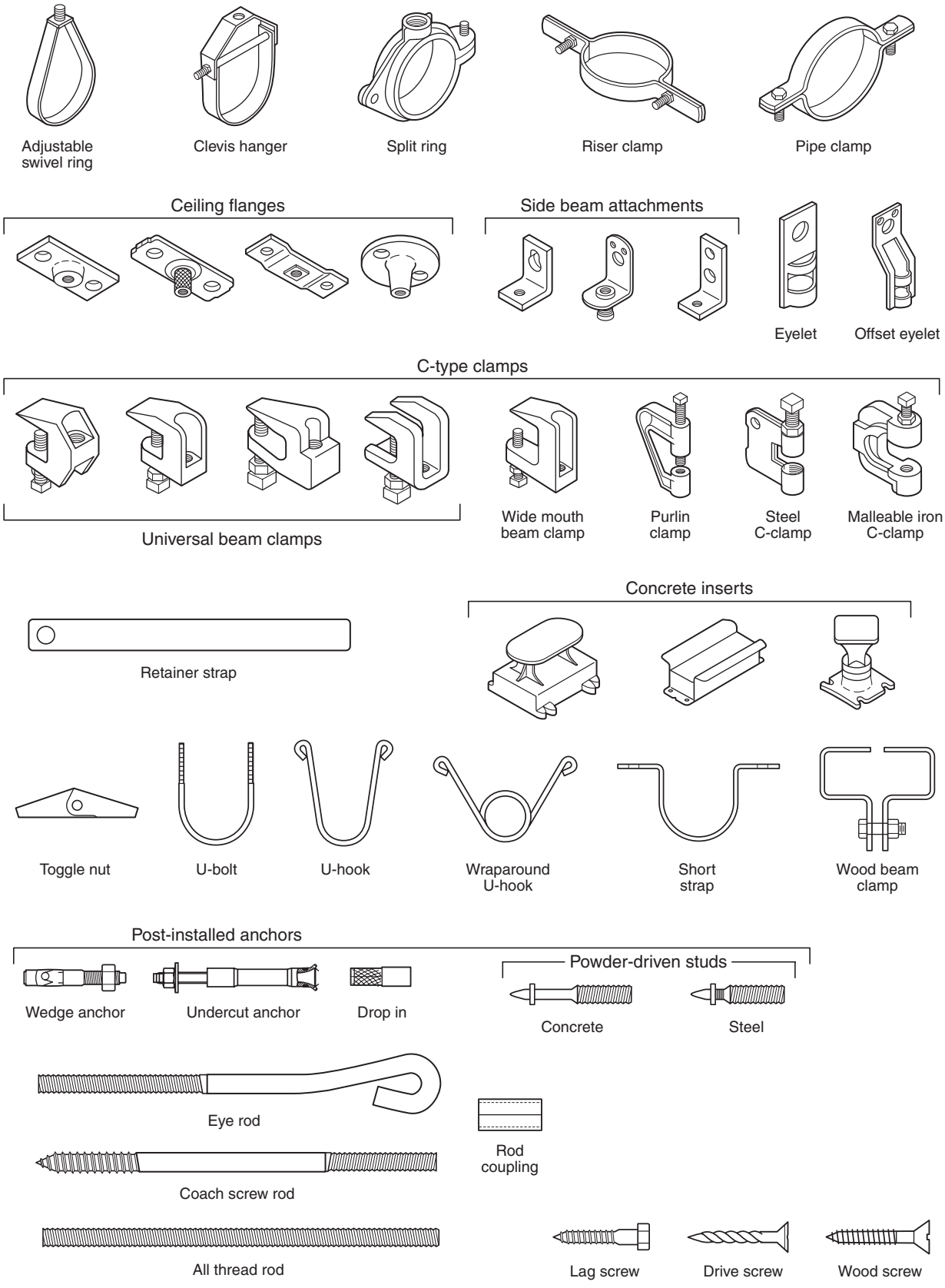

FIGURE A.9.1.1 Common Types of Acceptable Hangers.

Copyright 2014 National Fire Protection Association (NFPA). Licensed, by agreement, for individual use and download on October 4, 2014 to LEADER and READER for designated user PATTARAPORN SRITRAKOOL. No other reproduction or transmission in any form permitted without written permission of NFPA. For inquires or to report unauthorized use, contact licensing@nfpa.org.

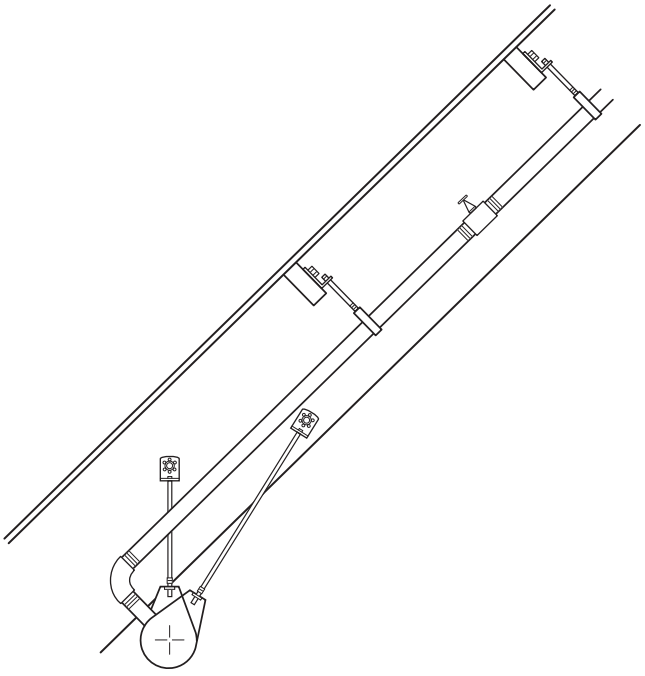

FIGURE A.9.1.2.3(1) Example of Additional Hangers Utilized to Minimize Nonaxial Loads.

Testing of Metal Suspension Systems of Acoustical Tile and Lay-In Panel Ceilings, and installed in accordance with ASTM C 636, *Standard Practice for Installation of Metal Ceiling Suspension Systems for Acoustical Tile and Lay-In Panels*, can substantially support that load. In addition, the supporting material showed that the flexible hose connection can be attached to the suspended ceilings because it allows the necessary deflections under seismic conditions.

A.9.2.1.3.3.4 An example of language for the label is as follows:

CAUTION: DO NOT REMOVE THIS LABEL.

Relocation of this device should only be performed by qualified and/or licensed individuals that are aware of the original system design criteria, hydraulic criteria, sprinkler head listing parameters, and knowledge of the state and local codes including NFPA 13 installation standards. Relocation of the device without this knowledge could adversely affect the performance of this fire protection and life safety system.

A.9.2.1.4.1 The requirements of 9.2.1.4.1 are based on metal decks only but can be applied to other applications such as concrete or gypsum-filled metal decks.

A.9.2.2 Where copper tube is to be installed in moist areas or other environments conducive to galvanic corrosion, copper hangers or ferrous hangers with an insulating material should be used.

A.9.2.3.2 The hangers required by Chapter 9 are intended to accommodate general loading such as check valves, control valves, or dry or deluge valves. Where additional equipment such as backflow prevention assemblies and other devices with substantial loads are added, additional hangers should be considered.

A.9.2.3.2.2 See Figure A.9.2.3.2.2.

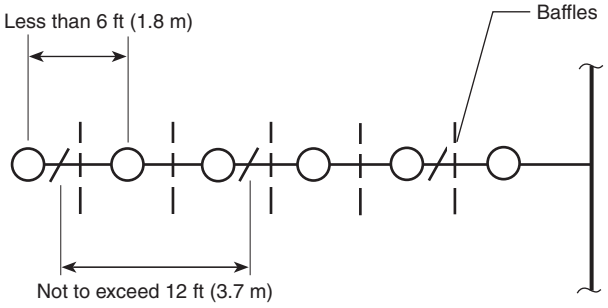

FIGURE A.9.2.3.2.2 Distance Between Hangers.

A.9.2.3.2.4 The "starter length" is the first piece of pipe on a branch line between the main, riser nipple, or drop and the first sprinkler. Starter pieces that are less than 6 ft (1.8 m) in length do not need a hanger of their own because they are supported by the main. However, if the intermediate hanger on the main is omitted, the starter piece needs to have a hanger because the main is going to be supported from the branch lines. The starter lengths can also apply to other piping, such as drains and test connections.

A.9.2.3.2.5 When a branchline contains offsets, sections of pipe are considered adequately supported by the hangers on the adjacent pipe sections when the overall distance between hangers does not exceed the requirements in Table 9.2.2.1(a) and Table 9.2.2.1(b). The cumulative distance includes changes in horizontal direction. Multiple consecutive sections of pipe should be permitted to omit hangers.

A.9.2.3.4 Sprinkler piping should be adequately secured to restrict the movement of piping upon sprinkler operation. The reaction forces caused by the flow of water through the sprinkler could result in displacement of the sprinkler, thereby adversely affecting sprinkler discharge. Listed CPVC pipe has specific requirements for piping support to include additional pipe bracing of sprinklers. *(See Figure A.9.2.3.4.)*

A.9.2.3.4.4 See Figure A.9.2.3.4.4(a) and Figure A.9.2.3.4.4(b).

A.9.2.3.5 See Figure A.9.2.3.5.

A.9.2.3.5.2 See Figure A.9.2.3.5.2.

A.9.2.3.6 The movement that is being restrained is to keep the sidewall sprinkler in its intended location during and post-operation. This should not be confused with the loads applicable to seismic restraints.

A.9.2.4.7 When a main contains offsets, sections of pipe are considered adequately supported by the hangers on the adjacent pipe sections when the overall distance between hangers does not exceed the requirements in Table 9.2.2.1(a) and Table 9.2.2.1(b). The cumulative distance includes changes in horizontal direction. Multiple consecutive sections of pipe should be permitted to omit hangers.

A.9.2.5.3 This arrangement is acceptable to establish and secure the riser's lateral position but not to support the riser's vertical load.

A.9.2.5.4.2 The restraint required by 9.2.5.4.2 is needed to prevent accumulated vertical movement when the riser is pressurized. Restraint is generally provided by use of a riser clamp at the underside of a floor slab.

Copyright 2014 National Fire Protection Association (NFPA). Licensed, by agreement, for individual use and download on October 4, 2014 to LEADER and READER for designated user PATTARAPORN SRITRAKOOL. No other reproduction or transmission in any form permitted without written permission of NFPA. For inquires or to report unauthorized use, contact licensing@nfpa.org.

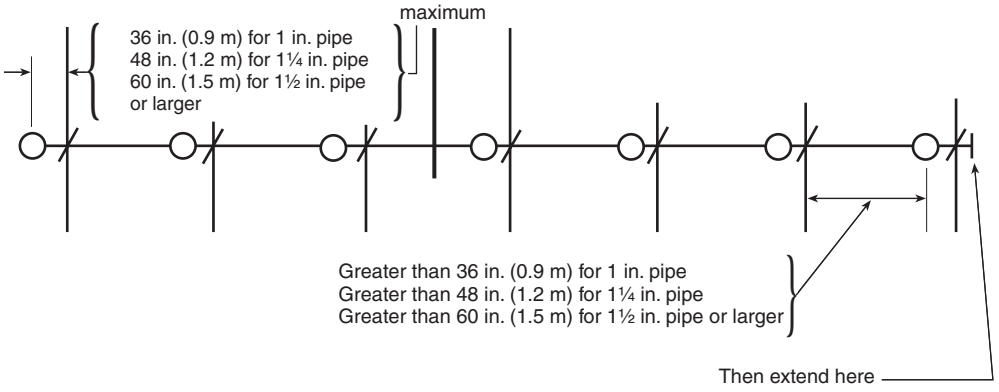

FIGURE A.9.2.3.4 Distance from Sprinkler to Hanger.

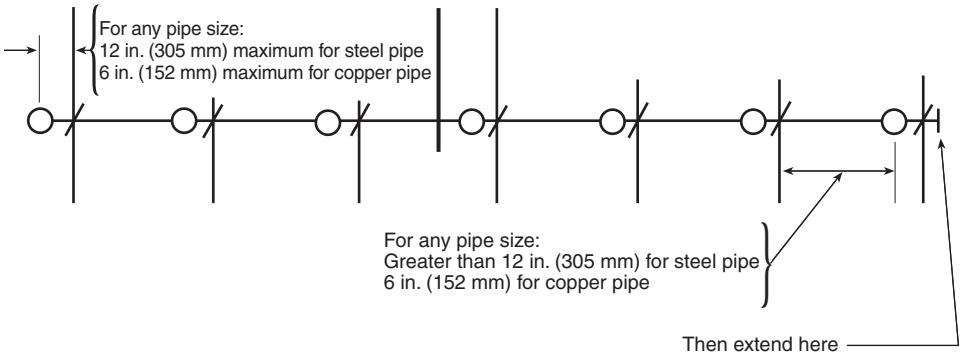

FIGURE A.9.2.3.4.4(a) Distance from Sprinkler to Hanger Where Maximum Pressure Exceeds 100 psi (6.9 bar) and Branch Line Above Ceiling Supplies Pendent Sprinklers Below Ceiling.

A.9.2.6 Examples include headers and horizontal runs of pipe that need support from the floor.

Where applicable, the design of pipe stands should consider additional loading from other sources. Environmental impacts, including water accumulation at the base, corrosion, and wind should also be taken into account as appropriate.

A.9.3.1 Sprinkler systems are protected against earthquake damage by means of the following:

(1) Stresses that would develop in the piping due to differential building movement are minimized through the use of flexible joints or clearances.
(2) Bracing is used to keep the piping fairly rigid when supported from a building component expected to move as a unit, such as a ceiling.

Areas known to have a potential for earthquakes have been identified in building code and insurance maps.

Displacement due to story drift is addressed in 9.3.2 through 9.3.4.

A.9.3.2 Strains on sprinkler piping can be greatly lessened and, in many cases, damage prevented by increasing the flexibility between major parts of the sprinkler system. One part of the piping should never be held rigidly and another part allowed to move freely without provision for relieving the strain. Flexibility can be provided by using listed flexible couplings, by joining grooved end pipe at critical points, and by allowing clearances at walls and floors.

Tank or pump risers should be treated the same as sprinkler risers for their portion within a building. The discharge pipe of tanks on buildings should have a control valve above the roof line so any pipe break within the building can be controlled.

Piping 2 in. (51 mm) or smaller in size is pliable enough so that flexible couplings are not usually necessary. "Rigid-type" couplings that permit less than 1 degree of angular movement at the grooved connections are not considered to be flexible couplings. *[See Figure A.9.3.2(a) and Figure A.9.3.2(b).]*

A.9.3.2.3.1(1) Risers do not include riser nipples as defined in 3.5.8.

A.9.3.2.3.1(4) A building expansion joint is usually a bituminous fiber strip used to separate blocks or units of concrete to prevent cracking due to expansion as a result of temperature changes. Where building expansion joints are used, the flexible coupling is required on one side of the joint by 9.3.2.3(4).

For seismic separation joints, considerably more flexibility is needed, particularly for piping above the first floor. Figure A.9.3.3(a) shows a method of providing additional flexibility through the use of swing joints.

Copyright 2014 National Fire Protection Association (NFPA). Licensed, by agreement, for individual use and download on October 4, 2014 to LEADER and READER for designated user PATTARAPORN SRITRAKOOL. No other reproduction or transmission in any form permitted without written permission of NFPA. For inquires or to report unauthorized use, contact licensing@nfpa.org.

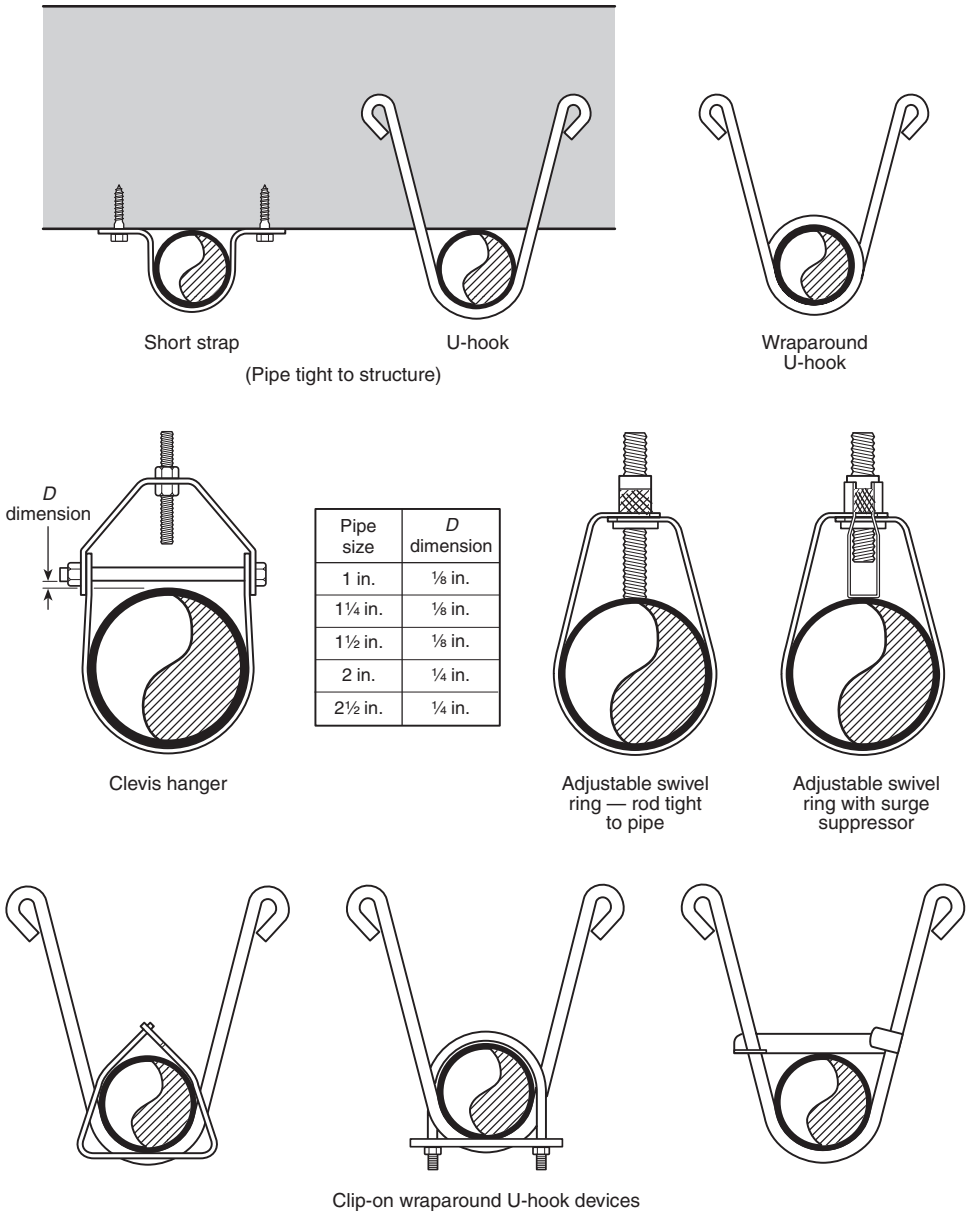

Pipe size	*D* dimension
1 in.	⅛ in.
1¼ in.	⅛ in.
1½ in.	⅛ in.
2 in.	¼ in.
2½ in.	¼ in.

FIGURE A.9.2.3.4.4(b) Examples of Acceptable Hangers for End-of-Line (or Armover) Pendent Sprinklers.

Copyright 2014 National Fire Protection Association (NFPA). Licensed, by agreement, for individual use and download on October 4, 2014 to LEADER and READER for designated user PATTARAPORN SRITRAKOOL. No other reproduction or transmission in any form permitted without written permission of NFPA. For inquires or to report unauthorized use, contact licensing@nfpa.org.

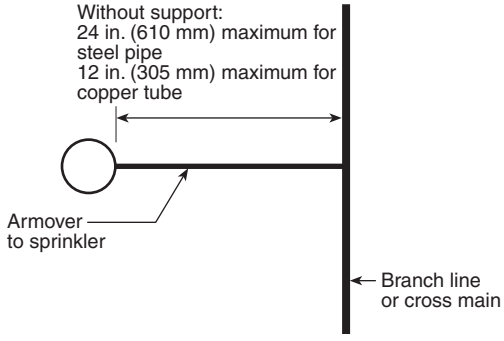

FIGURE A.9.2.3.5 Maximum Length for Unsupported Armover.

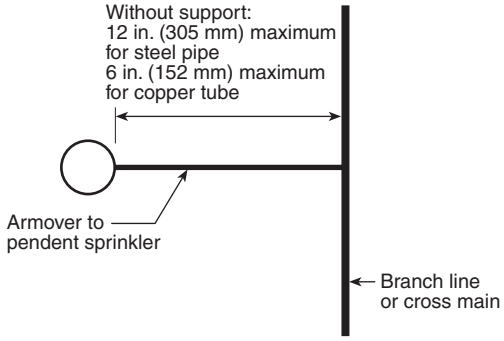

Note: The pendent sprinkler can be installed either directly in the fitting at the end of the armover or in a fitting at the bottom of a drop nipple.

FIGURE A.9.2.3.5.2 Maximum Length of Unsupported Armover Where Maximum Pressure Exceeds 100 psi (6.9 bar) and Branch Line Above Ceiling Supplies Pendent Sprinklers Below Ceiling.

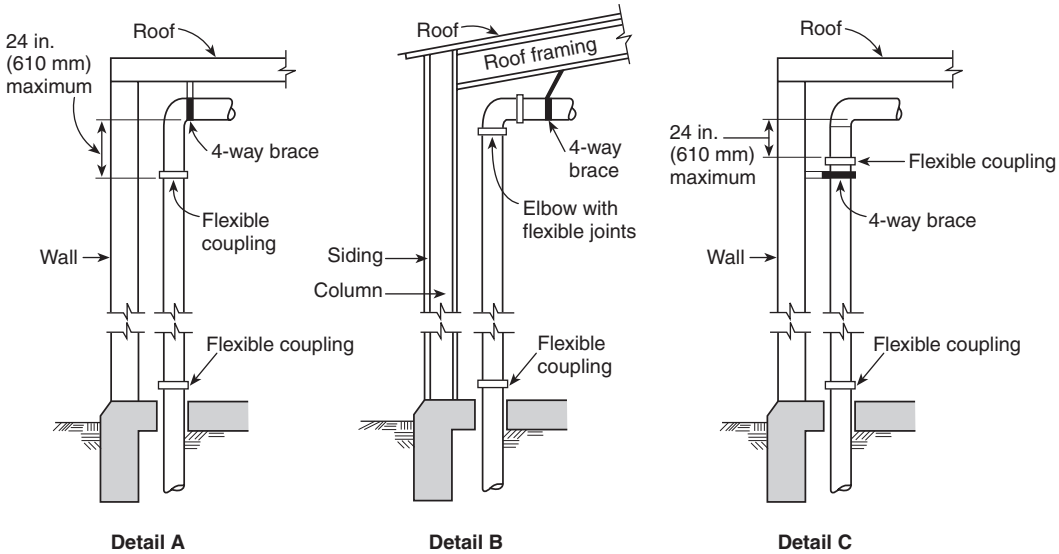

Note to Detail A: The four-way brace should be attached above the upper flexible coupling required for the riser and preferably to the roof structure if suitable. The brace should not be attached directly to a plywood or metal deck.

FIGURE A.9.3.2(a) Riser Details.

Copyright 2014 National Fire Protection Association (NFPA). Licensed, by agreement, for individual use and download on October 4, 2014 to LEADER and READER for designated user PATTARAPORN SRITRAKOOL. No other reproduction or transmission in any form permitted without written permission of NFPA. For inquires or to report unauthorized use, contact licensing@nfpa.org.

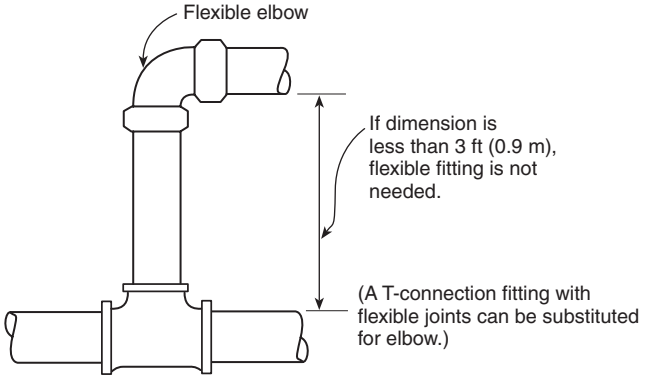

FIGURE A.9.3.2(b) Detail at Short Riser.

A.9.3.2.3.2(1) See Figure A.9.3.2.3.2(1).

A.9.3.2.3.2(2) The flexible coupling should be at the same elevation as the flexible coupling on the main riser. *[See Figure A.9.3.2.3.2(2).]*

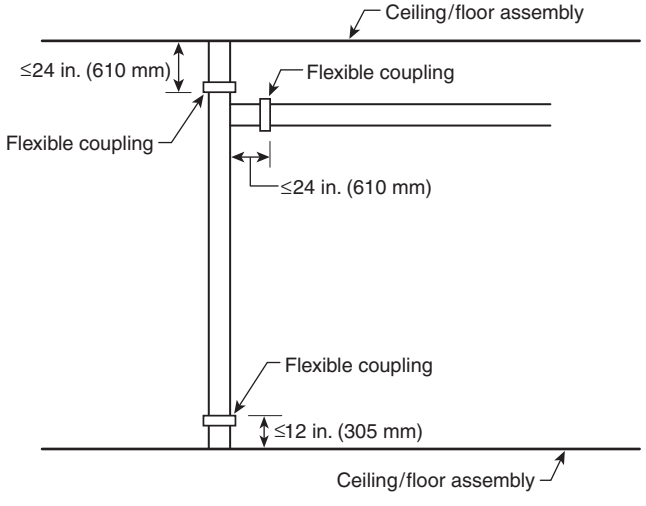

FIGURE A.9.3.2.3.2(1) Flexible Coupling on Horizontal Portion of Tie-In.

A.9.3.2.4 See Figure A.9.3.2.4. Drops that extend into free-standing storage racks or other similar structures should be designed to accommodate a horizontal relative displacement between the storage rack and the overhead supply piping. Free standing structures include but are not limited to freezers, coolers, spray booths, and offices.

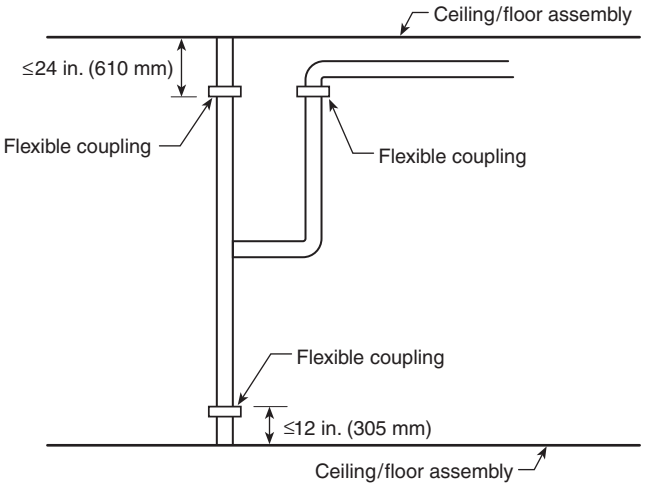

FIGURE A.9.3.2.3.2(2) Flexible Coupling on Vertical Portion of Tie-In.

The horizontal relative displacement should be determined using the least value from one of the following formulas and be taken as the height of the top point of attachment to the storage rack above its base or the highest point of potential contact between the rack structure and the piping above its base, whichever is higher. The design should account for the differential movement value as determined from one of the two formulas, not both, and the lesser of the two values is acceptable. It should be determined how to account for the differential movement using flexible couplings or other approved means.

$$D = H * 0.06 * S_1 * F_v$$

or

$$D = H * 0.05$$

where:

D = differential movement between the rack and the roof [ft (m)]

H = height of the top point of attachment to the rack [ft (m)]

S_1 = one second period spectral acceleration per USGS 2010 Seismic Design Maps (see SEI/ASCE 7)

F_v = one second period site coefficient (Site Class D)

F_v is a function of S_1 and is determined as follows:

S_1	F_v
≤0.1	2.4
=0.2	2.0
=0.3	1.8
=0.4	1.6
≥0.5	1.5

Note: Use straight-line interpolation for intermediate values of S_1.

Copyright 2014 National Fire Protection Association (NFPA). Licensed, by agreement, for individual use and download on October 4, 2014 to LEADER and READER for designated user PATTARAPORN SRITRAKOOL. No other reproduction or transmission in any form permitted without written permission of NFPA. For inquires or to report unauthorized use, contact licensing@nfpa.org.

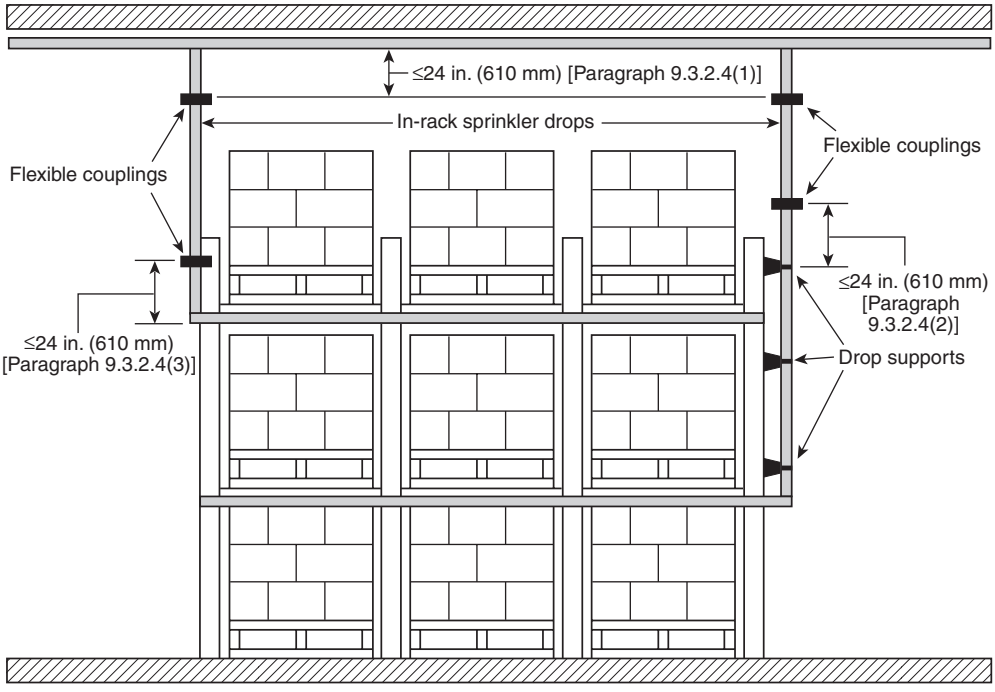

FIGURE A.9.3.2.4 Flexible Couplings for Drops.

A.9.3.3 Plan and elevation views of a seismic separation assembly configured with flexible elbows are shown in Figure A.9.3.3(a) or Figure A.9.3.3(b).

The extent of permitted movement should be sufficient to accommodate calculated differential motions during earthquakes. In lieu of calculations, permitted movement can be made at least twice the actual separations, at right angles to the separation as well as parallel to it.

A.9.3.3.3 Each four-way brace should be attached to the building structure on opposite sides of the seismic separation joint.

A.9.3.4 While clearances are necessary around the sprinkler piping to prevent breakage due to building movement, suitable provision should also be made to prevent passage of water, smoke, or fire.

Drains, fire department connections, and other auxiliary piping connected to risers should not be cemented into walls or floors; similarly, pipes that pass horizontally through walls or foundations should not be cemented solidly, or strains will accumulate at such points.

Where risers or lengths of pipe extend through suspended ceilings, they should not be fastened to the ceiling framing members.

In areas that use suspended ceilings and are a seismic design category of D, E, or F, a larger clearance could be necessary around the sprinkler unless the suspended ceiling is rigidly braced or flexible sprinkler hose fitting are used as noted in ASTM E 580, *Standard Practice for Installation of Ceiling Suspension Systems for Acoustical Tile and Lay-in Panels in Areas Subject to Earthquake Ground Motions.*

A.9.3.5 Figure A.9.3.5(a) and Figure A.9.3.5(b) are examples of forms used to aid in the preparation of bracing calculations.

A.9.3.5.1.3 All horizontal loads given in this document are at allowable stress design levels. When performing a more advanced analysis procedure, as described in 9.3.1.2, care should be taken to ensure that the correct load factors (strength design or allowable stress design) are used.

A.9.3.5.1.4 A shared support structure can be used to provide both support as defined in 9.1.1.3.1 and provide resistance to seismic forces. When a shared support structure is used for both support and seismic forces, the shared support structure should be designed to resist the seismic force for all of the distribution system. The shared support structure should be designed for a load in which the zone of influence includes the water-filled sprinkler pipe and all other distribution systems attached to the shared support structure.

A.9.3.5.1.5 It is the intent of this section to avoid any incompatibility of displacements between the shared support structure and the sprinkler seismic bracing, as might occur if the supports are located on separate adjacent structures.

Copyright 2014 National Fire Protection Association (NFPA). Licensed, by agreement, for individual use and download on October 4, 2014 to LEADER and READER for designated user PATTARAPORN SRITRAKOOL. No other reproduction or transmission in any form permitted without written permission of NFPA. For inquires or to report unauthorized use, contact licensing@nfpa.org.

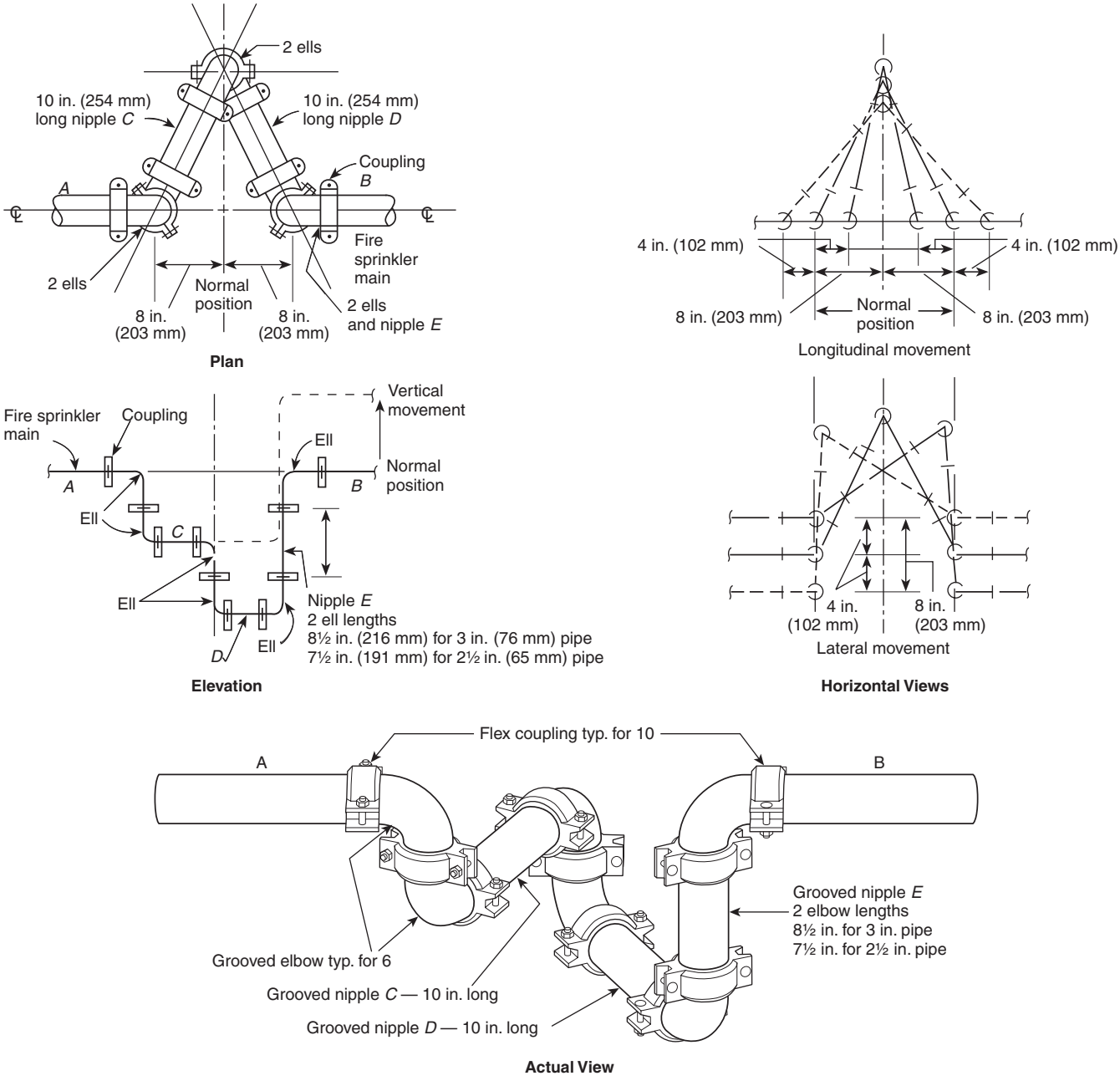

FIGURE A.9.3.3(a) Seismic Separation Assembly in which 8 in. (203 mm) Separation Crossed by Pipes Up to 4 in. (102 mm) in Nominal Diameter. (For other separation distances and pipe sizes, lengths and distances should be modified proportionally.)

Copyright 2014 National Fire Protection Association (NFPA). Licensed, by agreement, for individual use and download on October 4, 2014 to LEADER and READER for designated user PATTARAPORN SRITRAKOOL. No other reproduction or transmission in any form permitted without written permission of NFPA. For inquires or to report unauthorized use, contact licensing@nfpa.org.

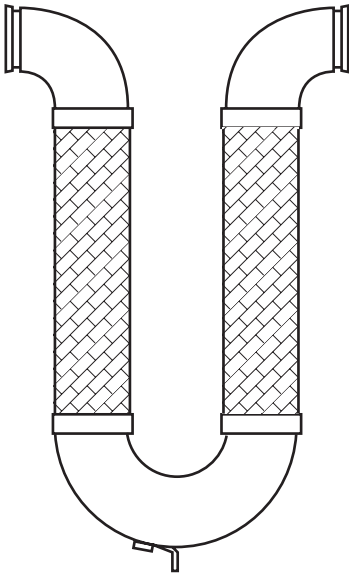

FIGURE A.9.3.3(b) Seismic Separation Assembly Incorporating Flexible Piping.

A.9.3.5.4.2 The investigation of tension-only bracing using materials, connection methods, or both, other than those described in Table 9.3.5.11.8(a), Table 9.3.5.11.8(b), and Table 9.3.5.11.8(c), should involve consideration of the following:

(1) Corrosion resistance.
(2) Prestretching to eliminate permanent construction stretch and to obtain a verifiable modulus of elasticity.
(3) Color coding or other verifiable marking of each different size cable for field verification.
(4) The capacity of all components of the brace assemblies, including the field connections, to maintain the manufacturer's minimum certified break strength.
(5) Manufacturer's published design data sheets/manual showing product design guidelines, including connection details, load calculation procedures for sizing of braces, and the maximum recommended horizontal load-carrying capacity of the brace assemblies including the associated fasteners as described in Figure 9.3.5.12.1. The maximum allowable horizontal loads must not exceed the manufacturer's minimum certified break strength of the brace assemblies, excluding fasteners, after taking a safety factor of 1.5 and then adjusting for the brace angle.
(6) Brace product shipments accompanied by the manufacturer's certification of the minimum break strength and prestretching and installation instructions.
(7) The manufacturer's literature, including any special tools or precautions required to ensure proper installation.
(8) A means to prevent vertical motion due to seismic forces when required.

Table A.9.3.5.4.2 identifies some specially listed tension-only bracing systems.

A.9.3.5.5.1 A brace assembly includes the brace member, the attachment components to pipe and building, and their fasteners. There are primarily two considerations in determining the spacing of lateral earthquake braces in straight runs of pipe: (1) deflection and (2) stress. Both deflection and stress tend to increase with the spacing of the braces. The larger the midspan deflection, the greater the chance of impact with adjacent structural/nonstructural components. The higher the stress in the pipe, the greater the chance of rupture in the pipe or coupling. Braces are spaced to limit the stresses in the pipe and fittings to the levels permitted in modern building codes, with an upper limit of 40 ft (12.2 m). The braces also serve to control deflection of the pipe under earthquake loads. In the longitudinal direction, there is no deflection consideration, but the pipe must transfer the load to the longitudinal braces without inducing large axial stresses in the pipe and the couplings.

A.9.3.5.5.2 The sway brace spacings in Table 9.3.5.5.2(a) through Table 9.3.5.5.2(e) were developed to allow designers to continue to use familiar concepts, such as zone of influence, to lay out and proportion braces while ensuring compatibility with modern seismic requirements. The spacing of braces was determined using the provisions of SEI/ASCE 7, *Minimum Design Loads for Buildings and Other Structures*, assuming steel pipe with threaded or grooved connections for Table 9.3.5.5.2(a) through Table 9.3.5.5.2(c). The tabulated values are based on conservative simplifying assumptions. A detailed engineering analysis, taking into account the properties of the specific system, might provide greater spacing. However, in order to control deflections, in no case should the lateral sway brace spacing exceed 40 ft (12.2 m).

A.9.3.5.5.10 Suspended trapeze members are not considered building structure.

A.9.3.5.7.2 See Figure A.9.3.5.7.2.

A.9.3.5.8.1 The four-way brace provided at the riser can also provide longitudinal and lateral bracing for adjacent mains. This section is not intended to require four-way bracing on a sprig or on a drop to a single sprinkler.

A.9.3.5.9 *Location of Sway Bracing.* Two-way braces are either longitudinal or lateral, depending on their orientation with the axis of the piping. *[See Figure A.9.3.5.9(a), Figure A.9.3.5.9(b), Figure A.9.3.5.9(c), and Figure A.9.3.5.9(d).]* The simplest form of two-way brace is a piece of steel pipe or angle. Because the brace must act in both compression and tension, it is necessary to size the brace to prevent buckling.

An important aspect of sway bracing is its location. In Building 1 of Figure A.9.3.5.9(a), the relatively heavy main will pull on the branch lines when shaking occurs. If the branch lines are held rigidly to the roof or floor above, the fittings can fracture due to the induced stresses. In selecting brace locations, one must consider both the design load on the brace, as well as the ability of the pipe to span between brace locations.

Bracing should be on the main as indicated at Location B. With shaking in the direction of the arrows, the light branch lines will be held at the fittings. Where necessary, a lateral brace or other restraint should be installed to prevent a branch line from striking against building components or equipment.

A four-way brace is indicated at Location A. This keeps the riser and main lined up and also prevents the main from shifting.

In Building 1, the branch lines are flexible in a direction parallel to the main, regardless of building movement. The heavy main cannot shift under the roof or floor, and it also steadies the branch lines. While the main is braced, the flexible couplings on the riser allow the sprinkler system to move with the floor or roof above, relative to the floor below.

Figure A.9.3.5.9(b), Figure A.9.3.5.9(c), and Figure A.9.3.5.9(d) show typical locations of sway bracing.

For all threaded connections, sight holes or other means should be provided to permit indication that sufficient thread is engaged.

Copyright 2014 National Fire Protection Association (NFPA). Licensed, by agreement, for individual use and download on October 4, 2014 to LEADER and READER for designated user PATTARAPORN SRITRAKOOL. No other reproduction or transmission in any form permitted without written permission of NFPA. For inquires or to report unauthorized use, contact licensing@nfpa.org.

Seismic Bracing Calculations

Sheet _____ of _____

Project: _____ Contractor: _____

Address: _____ Address: _____

_____ _____

Telephone: _____

Fax: _____

Brace Information

Length of brace: _____

Diameter of brace: _____

Type of brace: _____

Angle of brace: _____

Least radius of gyration:* _____

l/*r* value:* _____

Maximum horizontal load: _____

Seismic Brace Attachments

Structure attachment fitting or tension-only bracing system:

Make: _____ Model: _____

Transition attachment fitting (where applicable):

Make: _____ Model: _____

Listed load rating: _____ Adjusted load rating per 9.3.5.2.4: _____

Sway brace (pipe attachment) fitting:

Make: _____ Model: _____

Listed load rating: _____ Adjusted load rating per 9.3.5.2.4: _____

Fastener Information

Orientation of connecting surface: _____

Fastener:

Type: _____

Diameter: _____

Length (in wood): _____

Maximum load: _____

Seismic Brace Assembly Detail

(Provide detail on plans)

Brace identification no. (to be used on plans) _____

☐ Lateral brace ☐ Longitudinal brace ☐ 4-way brace

Sprinkler System Load Calculation ($F_{pw} = C_p W_p$)

C_p = _____

Diameter	Type	Length (ft)	Total (ft)	Weight per ft	Weight
				lb/ft	lb
				lb/ft	lb
				lb/ft	lb
				lb/ft	lb
				lb/ft	lb
				Subtotal weight	lb
				W_p (incl. 15%)	lb
				Total (F_{pw})	lb
				Maximum F_{pw} per 9.3.5.5.2 (if applicable)	

* Excludes tension-only bracing systems

© 2012 National Fire Protection Association NFPA 13

FIGURE A.9.3.5(a) Seismic Bracing Calculation Form.

Copyright 2014 National Fire Protection Association (NFPA). Licensed, by agreement, for individual use and download on October 4, 2014 to LEADER and READER for designated user PATTARAPORN SRITRAKOOL. No other reproduction or transmission in any form permitted without written permission of NFPA. For inquires or to report unauthorized use, contact licensing@nfpa.org.

Seismic Bracing Calculations

Sheet _____ of _____

Project:	Acme Warehouse	Contractor:	Smith Sprinkler Company
Address:	321 First Street	Address:	123 Main Street
	Any City, Any State		Any City, Any State
		Telephone:	(555) 555-1234
		Fax:	(555) 555-4321

Brace Information

Length of brace:	3 ft 6 in.
Diameter of brace:	1 in.
Type of brace:	Schedule 40
Angle of brace:	45° to 59°
Least radius of gyration:*	0.421
l/*r* value:*	100
Maximum horizontal load:	4455 lb

Fastener Information

Orientation of connecting surface: "E"

Fastener:

Type:	Through bolt
Diameter:	¾ in.
Length (in wood):	5 ½ in.
Maximum load:	620 lb

Seismic Brace Attachments

Structure attachment fitting or tension-only bracing system:

Make: Acme Model: 123

Transition attachment fitting (where applicable):

Make: _____ Model: _____

Listed load rating: 1000 Adjusted load rating per 9.3.5.2.4: 707

Sway brace (pipe attachment) fitting:

Make: Acme Model: 321

Listed load rating: 1200 Adjusted load rating per 9.3.5.2.4: 849

Seismic Brace Assembly Detail

(Provide detail on plans)

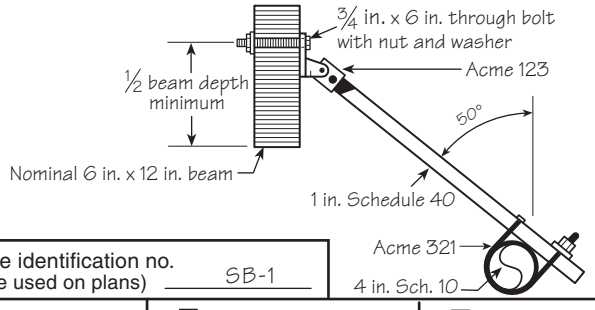

Brace identification no. (to be used on plans): SB-1

☒ Lateral brace ☐ Longitudinal brace ☐ 4-way brace

Sprinkler System Load Calculation ($F_{pw} = C_p W_p$)

C_p = 0.40

Diameter	Type	Length (ft)	Total (ft)	Weight per ft	Weight
1 in.	Sch. 40	15 ft + 25 ft + 8 ft + 22 ft	70 ft	2.05 lb/ft	143.5 lb
1¼ in.	Sch. 40	25 ft + 33 ft + 18 ft	76 ft	2.93 lb/ft	222.7 lb
1½ in.	Sch. 40	8 ft + 8 ft + 10 ft + 10 ft	36 ft	3.61 lb/ft	130.0 lb
2 in.	Sch. 40	20 ft	20 ft	5.13 lb/ft	102.6 lb
4 in.	Sch. 10	20 ft	20 ft	11.78 lb/ft	235.6 lb
				Subtotal weight	834.4 lb
				W_p (incl. 15%)	959.6 lb
				Total (F_{pw})	383.8 lb
				Maximum F_{pw} per 9.3.5.5.2 (if applicable)	1634

* Excludes tension-only bracing systems

© 2012 National Fire Protection Association NFPA 13

FIGURE A.9.3.5(b) Sample Seismic Bracing Calculation Form.

Copyright 2014 National Fire Protection Association (NFPA). Licensed, by agreement, for individual use and download on October 4, 2014 to LEADER and READER for designated user PATTARAPORN SRITRAKOOL. No other reproduction or transmission in any form permitted without written permission of NFPA. For inquires or to report unauthorized use, contact licensing@nfpa.org.

Table A.9.3.5.4.2 Specially Listed Tension-Only Seismic Bracing

Materials and Dimensions	Standard
Manual for Structural Application of Steel Cables	ASCE 19
Wire Rope Users Manual of the Wire Rope Technical Board	ASCE 19
Mechanical Strength Requirements	ASTM A 603
Breaking Strength Failure Testing	ASTM E 8

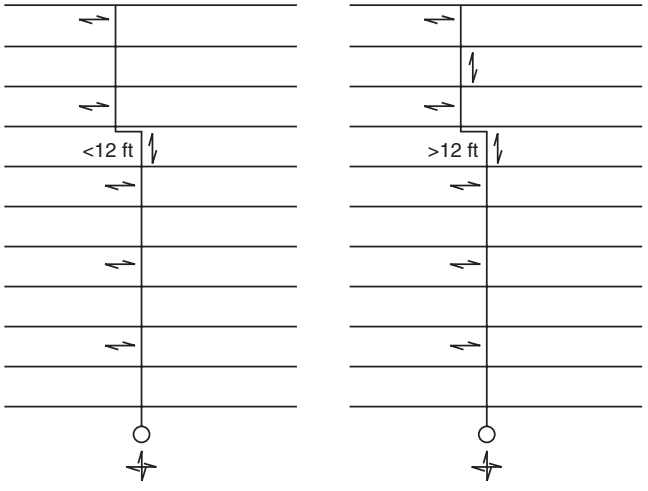

FIGURE A.9.3.5.7.2 Examples of Brace Locations for Change in Direction of Pipe.

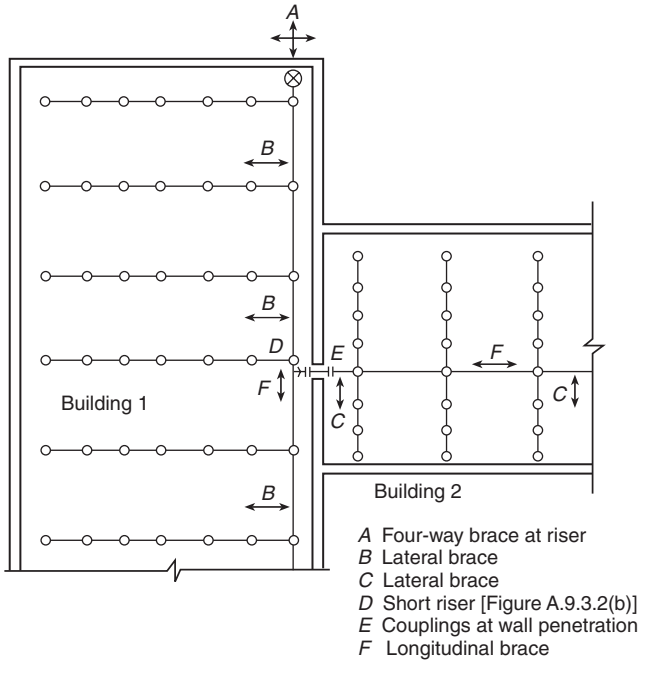

FIGURE A.9.3.5.9(a) Typical Earthquake Protection for Sprinkler Main Piping.

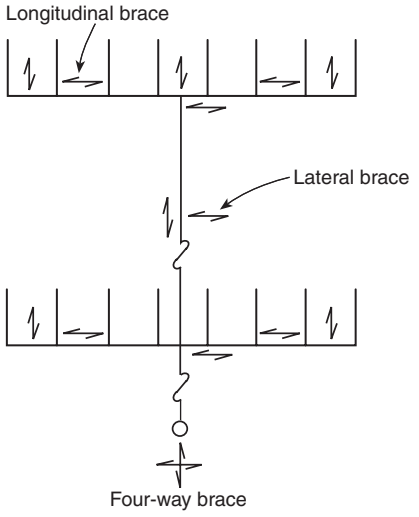

FIGURE A.9.3.5.9(b) Typical Location of Bracing on Mains on Tree System.

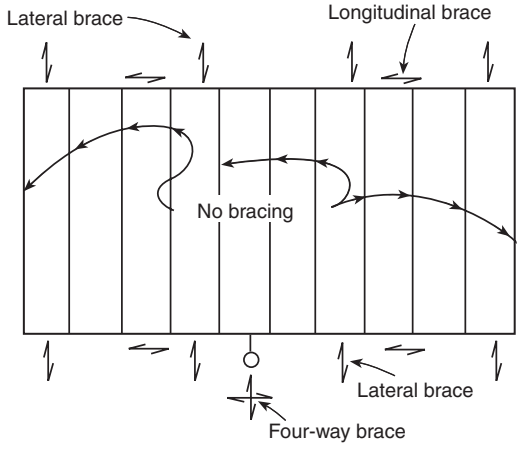

FIGURE A.9.3.5.9(c) Typical Location of Bracing on Mains on Gridded System.

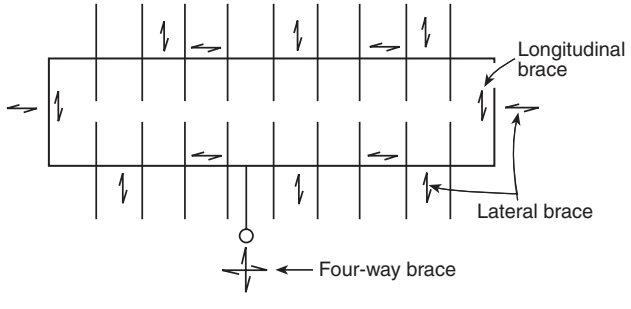

FIGURE A.9.3.5.9(d) Typical Location of Bracing on Mains on Looped System.

Copyright 2014 National Fire Protection Association (NFPA). Licensed, by agreement, for individual use and download on October 4, 2014 to LEADER and READER for designated user PATTARAPORN SRITRAKOOL. No other reproduction or transmission in any form permitted without written permission of NFPA. For inquires or to report unauthorized use, contact licensing@nfpa.org.

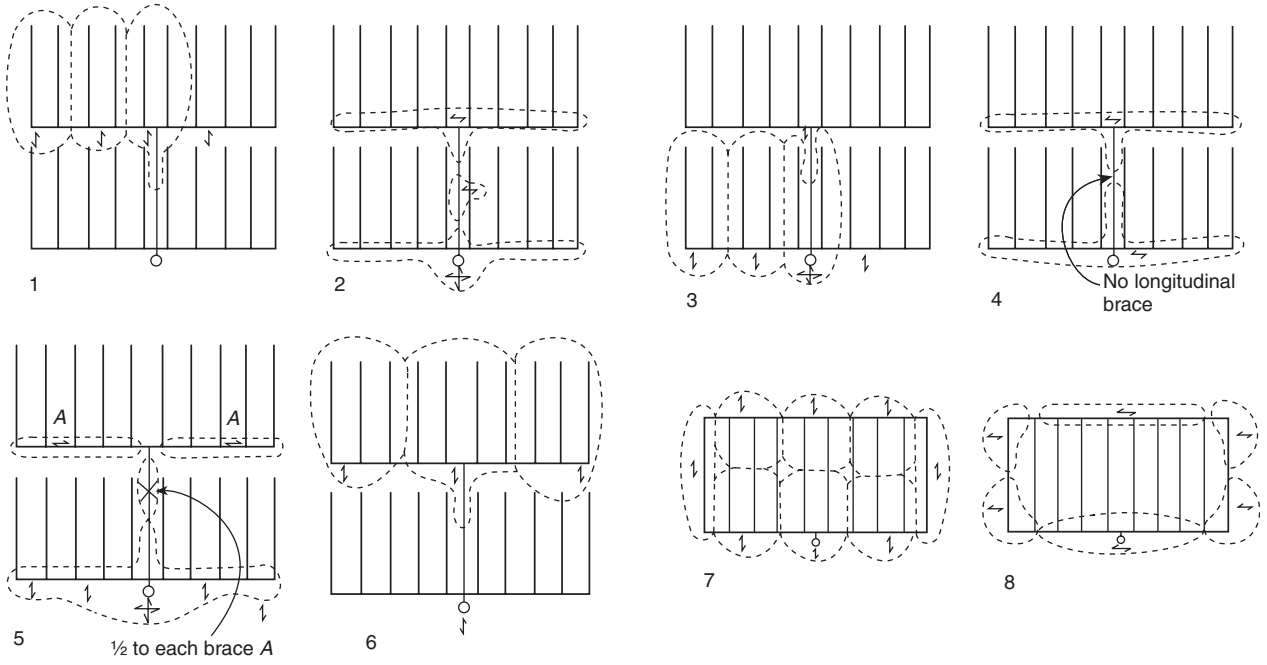

FIGURE A.9.3.5.9(e) Examples of Load Distribution to Bracing.

Table A.9.3.5.9 Piping Weights for Determining Horizontal Load

Nominal Dimensions		Weight of Water-Filled Pipe	
in.	mm	lb/ft	kg/m
Schedule 40 Pipe			
1	25	2.05	3.05
1¼	32	2.93	4.36
1½	40	3.61	5.37
2	50	5.13	7.63
2½	65	7.89	11.74
3	80	10.82	16.10
3½	90	13.48	20.06
4	100	16.40	24.41
5	125	23.47	34.93
6	150	31.69	47.16
8*	200	47.70	70.99
Schedule 10 Pipe			
1	25	1.81	2.69
1¼	32	2.52	3.75
1½	40	3.04	4.52
2	50	4.22	6.28
2½	65	5.89	8.77
3	80	7.94	11.82
3½	90	9.78	14.55
4	100	11.78	17.53
5	125	17.30	25.75
6	150	23.03	34.27
8	200	40.08	59.65

*Schedule 30.

To properly size and space braces, it is necessary to employ the following steps:

(1) Determine the seismic coefficient, C_p, using the procedures in 9.3.5.9.3. This is needed by the designer to verify that the piping can span between brace points. For the purposes of this example, assume that $C_p = 0.5$.
(2) Based on the distance of mains from the structural members that will support the braces, choose brace shapes and sizes from Table 9.3.5.11.8(a), Table 9.3.5.11.8(b), and Table 9.3.5.11.8(c) such that the maximum slenderness ratios, l/r, do not exceed 300. The angle of the braces from the vertical should be at least 30 degrees and preferably 45 degrees or more.
(3) Tentatively space lateral braces at 40 ft (12 m) maximum distances along mains and tentatively space longitudinal braces at 80 ft (24 m) maximum distances along mains. Lateral braces should meet the piping at right angles, and longitudinal braces should be aligned with the piping.
(4) Determine the total load tentatively applied to each brace in accordance with the examples shown in Figure A.9.3.5.9(e) and the following:
   (a) For the loads on lateral braces on cross mains, add C_p times the weight of the branch to C_p times the weight of the portion of the cross main within the zone of influence of the brace. *[See examples 1, 3, 6, and 7 in Figure A.9.3.5.9(e).]*
   (b) For the loads on longitudinal braces on cross mains, consider only C_p times the weight of the cross mains and feed mains within the zone of influence. Branch lines need not be included. *[See examples 2, 4, 5, 7, and 8 in Figure A.9.3.5.9(e).]*
   (c) For the four-way brace at the riser, add the longitudinal and lateral loads within the zone of influence of the brace *[see examples 2, 3, and 5 in Figure A.9.3.5.9(e)]*. For the four-way bracing at the top of the riser, C_p times the weight of the riser should be assigned to both

Copyright 2014 National Fire Protection Association (NFPA). Licensed, by agreement, for individual use and download on October 4, 2014 to LEADER and READER for designated user PATTARAPORN SRITRAKOOL. No other reproduction or transmission in any form permitted without written permission of NFPA. For inquires or to report unauthorized use, contact licensing@nfpa.org.

the lateral and longitudinal loads as they are separately considered.

(d) When a single brace has a combined load from both lateral and longitudinal forces (such as a lateral brace at the end of a main that turns 90 degrees), only the lateral should be considered for comparison with the load tables in 9.3.5.5.2.

(5) If the total expected loads are less than the maximums permitted in Table 9.3.5.11.8(a), Table 9.3.5.11.8(b), and Table 9.3.5.11.8(c) for the particular brace and orientation, and the maximum loads in the zone of influence of each lateral sway brace are less than the maximum values in Table 9.3.5.5.2(a) or Table 9.3.5.5.2(b), go on to step (6). If not, add additional braces to reduce the zones of influence of overloaded braces.

(6) Check that fasteners connecting the braces to structural supporting members are adequate to support the expected loads on the braces in accordance with Figure 9.3.5.12.1. If not, again add additional braces or additional means of support. Plates using multiple fasteners in seismic assemblies should follow the plate manufacturer guidelines regarding the applied loads.

Use the information on weights of water-filled piping contained within Table A.9.3.5.9. The factor of 1.15 is intended to approximate the additional weight of all the valves, fittings, and other devices attached to the system.

A.9.3.5.9.1 The factors used in the computation of the horizontal seismic load should be available from several sources, including the project architect or structural engineer or the authority having jurisdiction. In addition, the ground motion parameter S_s, is available using maps or software developed by the U.S. Geological Survey. The approach presented in NFPA 13 is compatible with the requirements of SEI/ASCE 7, *Minimum Design Loads for Buildings and Other Structures*, which provides the seismic requirements for model building codes. Sprinkler systems are emergency systems and as such should be designed for an importance factor (I_p) of 1.5. Seismic load equations allow the reduction of the seismic force by a component response modification factor (R_p) that reflects the ductility of the system; systems where braced piping is primarily joined by threaded fittings should be considered less ductile than systems where braced piping is joined by welded or mechanical-type fittings. In addition, a factor, a_p, is used to account for dynamic amplification of nonstructural systems supported by structures. Currently, steel piping systems typically used for fire sprinklers are assigned an R_p factor of 4.5 and an a_p factor of 2.5.

A.9.3.5.9.3.2 As linear interpolation of Table 9.3.5.9.3 is permitted, the following equation can be used to achieve the interpolated values:

$$C_p = C_{p-\text{low}} + \frac{C_{p-\text{high}} - C_{p-\text{low}}}{S_{s-\text{high}} - S_{s-\text{low}}}\left(S_s - S_{s-\text{low}}\right)$$

where:

C_p = seismic coefficient value being sought
$C_{p-\text{low}}$ = next lower seismic coefficient value from Table 9.3.5.9.2
$C_{p-\text{high}}$ = next higher seismic coefficient value from Table 9.3.5.9.2
S_s = spectral response as defined in 3.11.7
$S_{s-\text{low}}$ = next lower S_s value from Table 9.3.5.9.2
$S_{s-\text{high}}$ = next higher S_s value from Table 9.3.5.9.2

A.9.3.5.9.4 NFPA 13 has traditionally used the allowable stress design (ASD) method for calculations. The building codes typically use an ultimate strength design. The 0.7 referred to in this section is a conversion value to accommodate the different calculation methods. *(See also Annex E.)*

A.9.3.5.9.5 S_s is a measure of earthquake shaking intensity. S_s shall be taken as the maximum considered earthquake ground motion for 0.2-second spectral response acceleration (5 percent of critical damping), Site Class B. The data are available from the authority having jurisdiction or, in the United States, from maps developed by the U.S. Geological Survey. All that is required to get S_s is the latitude and longitude of the project site.

The horizontal force factor was given as F_p in earlier editions of NFPA 13. It has been changed to F_{pw}, to clearly indicate that it is a working, not an ultimate, load. In model building codes, F_p is used to denote the strength design level load.

It is not the intent of this section to default to the C_p value of 0.5 before attempts to determine the value of S_s and related coefficient value for C_p are made, such as on-line information provided by the U.S. Geological Survey website.

A.9.3.5.9.6 The zones of influence do not have to be symmetrically based on brace spacing. It is the intent of NFPA 13 that the chosen zone of influence be the worst-case load scenario.

A.9.3.5.9.6.1 Where steel Schedule 10 and Schedule 40 pipe are used, the section modules can be found in Table 9.1.1.7.1(b).

A.9.3.5.11 Sway brace members should be continuous. Where necessary, splices in sway bracing members should be designed and constructed to ensure that brace integrity is maintained.

A.9.3.5.11.8 These certified allowable horizontal loads must include a minimum safety factor of 1.5 against the ultimate break strength of the brace components and then be further reduced according to the brace angles.

A.9.3.5.11.9 Maximum allowable horizontal loads for steel sway braces shown in Table 9.3.5.11.8(a), Table 9.3.5.11.8(b), and Table 9.3.5.11.8(c) are applicable when the system is designed using allowable stress design methods. The maximum allowable loads have been derived for the controlling condition (braces in compression) using allowable stress design provisions of American Institute of Steel Construction (AISC) 360, *Specification for Structural Steel Buildings*.

In determining allowable horizontal loads in the tables, a modulus of elasticity (E) of 29,000 ksi, a yield stress (F_y) of 36 ksi, and an effective length factor (K) of 1.0 were assumed, since these are common. If these values are different in a specific situation, table values might need to be adjusted. Gross section properties are used for all shapes except for all-thread rods. For all-thread rods, area and radius of gyration are based on the minimum area of the threaded rod based on the radius at the root of the threads.

A.9.3.5.12 Current fasteners for anchoring to concrete are referred to as post-installed anchors. There are several types of post-installed anchors, including expansion anchors, chemical or adhesive anchors, and undercut anchors. The criteria in Figure 9.3.5.12.1 are based on the use of wedge expansion anchors and undercut anchors. Use of other anchors in concrete should be in accordance with the listing provisions of the anchor. Anchorage designs are usable under ASD methods.

Copyright 2014 National Fire Protection Association (NFPA). Licensed, by agreement, for individual use and download on October 4, 2014 to LEADER and READER for designated user PATTARAPORN SRITRAKOOL. No other reproduction or transmission in any form permitted without written permission of NFPA. For inquires or to report unauthorized use, contact licensing@nfpa.org.

Values in Figure 9.3.5.12.1 are based on an 8 to 1 safety factor in tension and a 4 to 1 safety factor in shear for allowable loads. Wedge anchors are torque-controlled expansion anchors that are set by applying a torque to the anchor's nut, which causes the anchor to rise while the wedge stays in place. This causes the wedge to be pulled onto a coned section of the anchor and presses the wedge against the wall of the hole. Undercut anchors might or might not be torque-controlled. Typically, the main hole is drilled, a special second drill bit is inserted into the hole, and flare is drilled at the base of the main hole. Some anchors are self-drilling and do not require a second drill bit. The anchor is then inserted into the hole and, when torque is applied, the bottom of the anchor flares out into the flared hole, and a mechanical lock is obtained. Consideration should be given with respect to the position near the edge of a slab and the pacing of anchors. Typically for full capacity in Figure 9.3.5.12.1, the edge distance should be 1½ times the embedment and 3 times the embedment for spacing between anchors.

A.9.3.5.12.1 The values for the wedge anchor tables and the undercut anchor tables have been developed using the following formula:

$$\left(\frac{TPr}{T_{allow}}\right)+\left(\frac{V}{V_{allow}}\right)\leq 1.2$$

where:
T = applied service tension load
Pr = prying factor
T_{allow} = allowable service tension load
V = applied service shear load
V_{allow} = allowable service shear load

The necessary tension and shear loads come from the anchor manufacturer's published data. As the prying factor is also necessary to develop appropriate load values, the equation for prying varies with the orientation of the fastener in relationship to the brace. The letters *A* through *D* in the following equations are dimensions of the anchors as indicated in Figure A.9.3.5.12.1(a) through Figure A.9.3.5.12.1(c). For anchor orientations A, B, and C, the prying factor is as follows:

$$Pr=\frac{\left(\frac{C+A}{Tan\theta}\right)-D}{A}$$

where:
Pr = prying factor
$Tan\theta$ = tangent of brace angle from vertical

For anchor orientations D, E, and F, the prying factor is as follows:

$$Pr=\frac{(C+A)-\left(\frac{D}{Tan\theta}\right)}{A}$$

where:
Pr = prying factor
$Tan\theta$ = tangent of brace angle from vertical

For anchor orientations G, H, and I, the prying factor is as follows:

$$Pr = D / B$$

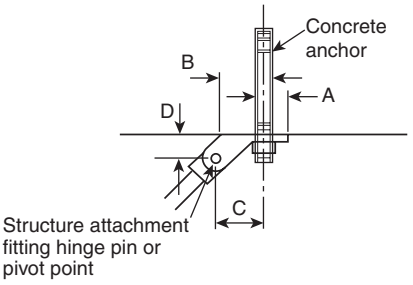

FIGURE A.9.3.5.12.1(a) Dimensions of Concrete Anchor for Orientations A, B, and C.

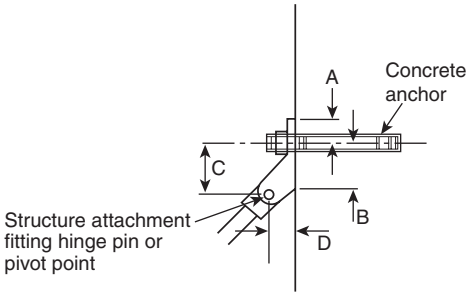

FIGURE A.9.3.5.12.1(b) Dimensions of Concrete Anchor for Orientations D, E, and F.

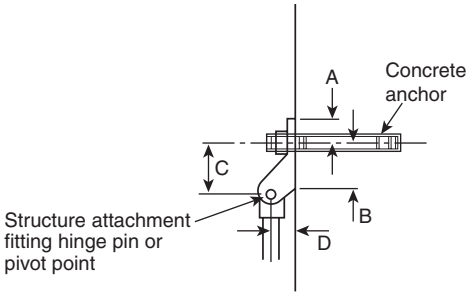

FIGURE A.9.3.5.12.1(c) Dimensions of Concrete Anchor for Orientations G, H, and I.

A.9.3.5.12.3 Through-bolt as described in 9.3.5.12.3 is intended to describe a method of bolting and attachment. It is the intent of the committee that a "through-bolt" could consist of threaded rod with a flat washer and nut on each end.

A.9.3.5.12.7.1 Concrete anchors included in current Evaluation Service Reports conforming to the requirements of acceptance criteria AC193 or AC308 as issued by ICC Evaluation Service, Inc. should be considered to meet ACI 355.2, *Qualification of Post-Installed Mechanical Anchors in Concrete & Commentary.*

A.9.3.6.1 Wires used for piping restraints should be attached to the branch line with two tight turns around the pipe and fastened with four tight turns within 1½ in. (38 mm) and should be attached to the structure in accordance with the details shown in Figure A.9.3.6.1(a) through Figure A.9.3.6.1(d) or other approved method.

Copyright 2014 National Fire Protection Association (NFPA). Licensed, by agreement, for individual use and download on October 4, 2014 to LEADER and READER for designated user PATTARAPORN SRITRAKOOL. No other reproduction or transmission in any form permitted without written permission of NFPA. For inquires or to report unauthorized use, contact licensing@nfpa.org.

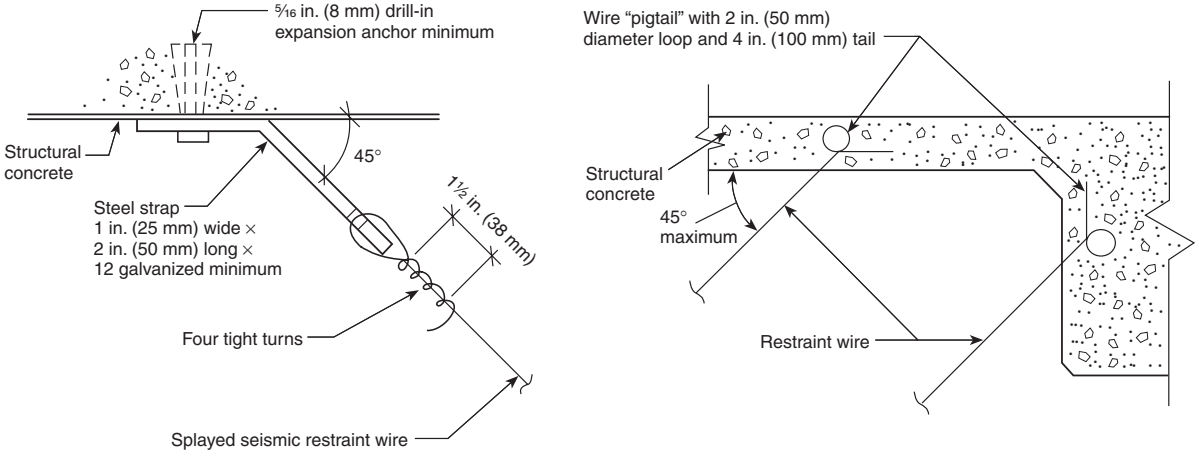

Detail A — Splayed seismic restraint wire attachment

Detail B

FIGURE A.9.3.6.1(a) Wire Attachment to Cast-in-Place Concrete.

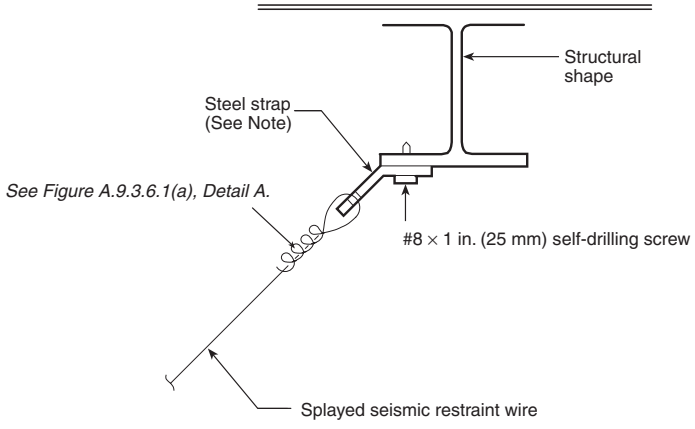

Detail A — At steel beams

[Note: See Figure A.9.3.6.1(a), Detail A.]

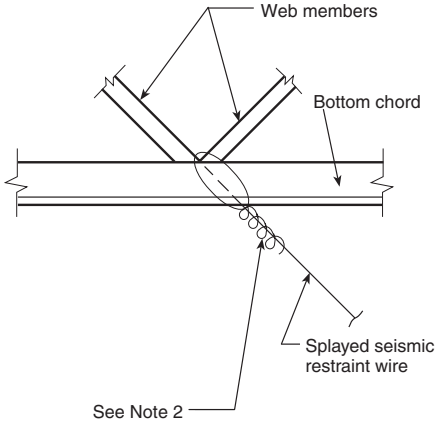

Notes:
1. Splay wires parallel to joist. Splay wires cannot be perpendicular to joist.
2. See Figure A.9.3.6.1(a), Detail A.

Detail B — At open web steel joist

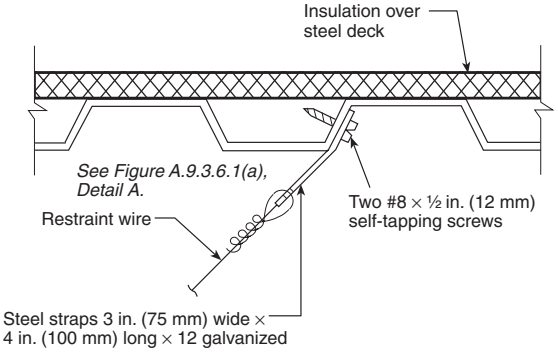

Note: If self-tapping screws are used with concrete fill, set screws before placing concrete.

Detail C — At steel roof deck

FIGURE A.9.3.6.1(b) Acceptable Details — Wire Connections to Steel Framing.

Copyright 2014 National Fire Protection Association (NFPA). Licensed, by agreement, for individual use and download on October 4, 2014 to LEADER and READER for designated user PATTARAPORN SRITRAKOOL. No other reproduction or transmission in any form permitted without written permission of NFPA. For inquires or to report unauthorized use, contact licensing@nfpa.org.

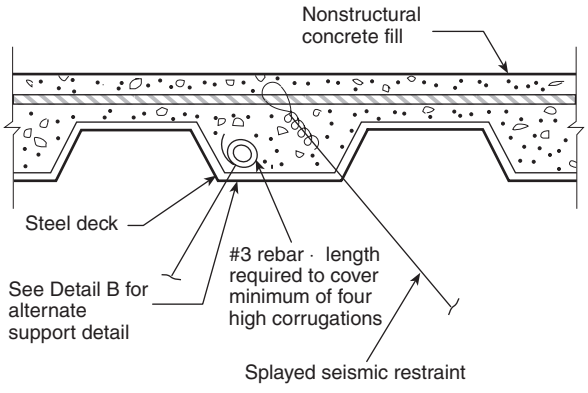

Detail A — At steel deck with insulating fill

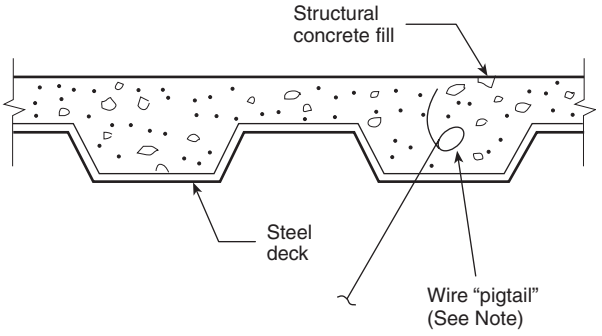

Note: See Figure A.9.3.6.1(a), Detail B.

Detail B — At steel deck with concrete fill

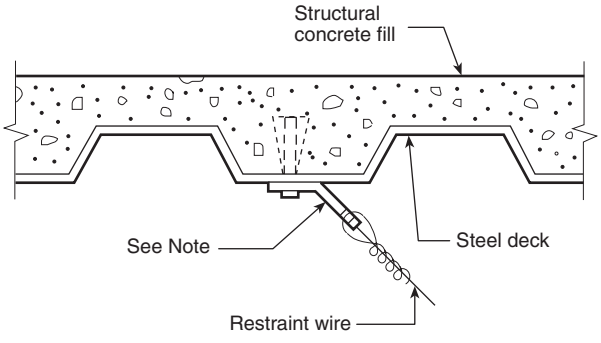

Note: See Figure A.9.3.6.1(a), Detail A.

Detail C — At steel deck with concrete fill

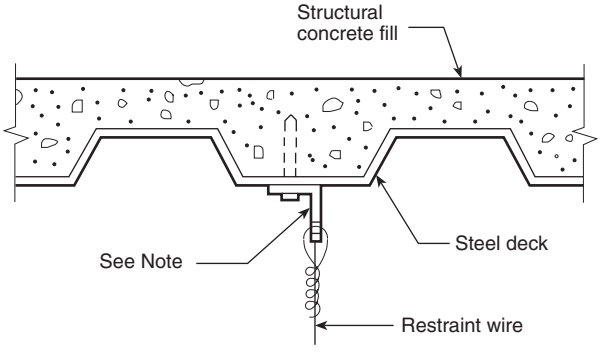

Note: See Figure A.9.3.6.1(a), Detail A.

Detail D — At steel deck with concrete fill

For SI units, 1 in. = 25.4 mm.
Note: If self-tapping screws are used with concrete fill, set screws before placing concrete.

FIGURE A.9.3.6.1(c) Acceptable Details — Wire Connections to Steel Decking with Fill.

A.9.3.6.1(5) See Figure A.9.3.6.1(5)(a) and Figure A.9.3.6.1(5)(b). When hangers are installed on both sides of the pipe, the l/r is not restricted.

A.9.3.6.4 Modern seismic codes require branch lines to be restrained, both to limit interaction of the pipe with other portions of the structure and to limit stresses in the pipes to permissible limits. The maximum spacing between restraints is dependent on the seismic coefficient, C_p, as shown in Table 9.3.6.4(a). Table 9.3.6.4(a) has been limited to 2 in. (50 mm) lines and smaller, because branch lines 2½ in. (65 mm) or larger are required to be seismically braced.

A.9.3.6.6 Such restraint can be provided by using the restraining wire discussed in 9.3.6.1. For the purposes of determining the need for restraint, the length of the sprig is determined by measuring the length of the exposed pipe and does not include the fittings and sprinkler.

A.10.1 The term *underground* is intended to mean direct buried piping. For example, piping installed in trenches and tunnels but exposed should be treated as aboveground piping. Loop systems for yard piping are recommended for increased reliability and improved hydraulics. Loop systems should be sectionalized by placing valves at branches and at strategic locations to minimize the extent of impairments. [**24:** A.10.1]

A.10.1.1 Copper tubing (Type K) with brazed joints conforming to Table 10.1.1 and Table 10.2.2.1 is acceptable for underground service. Listing and labeling information, along with applicable publications for reference, is as follows:

(1) *Listing and Labeling.* Testing laboratories list or label the following:
   (a) Cast iron and ductile iron pipe (cement-lined and unlined, coated and uncoated)
   (b) Asbestos-cement pipe and couplings
   (c) Steel pipe
   (d) Copper pipe
   (e) Fiberglass filament-wound epoxy pipe and couplings
   (f) Polyethylene pipe
   (g) Polyvinyl chloride (PVC) pipe and couplings
   (h) Underwriters Laboratories Inc. lists, under re-examination service, reinforced concrete pipe (cylinder pipe, nonprestressed and prestressed)

(2) *Pipe Standards.* The various types of pipe are usually manufactured to one of the following standards:
   (a) ASTM C 296, *Standard Specification for Asbestos-Cement Pressure Pipe*
   (b) AWWA C151, *Ductile Iron Pipe, Centrifugally Cast for Water*

Copyright 2014 National Fire Protection Association (NFPA). Licensed, by agreement, for individual use and download on October 4, 2014 to LEADER and READER for designated user PATTARAPORN SRITRAKOOL. No other reproduction or transmission in any form permitted without written permission of NFPA. For inquires or to report unauthorized use, contact licensing@nfpa.org.

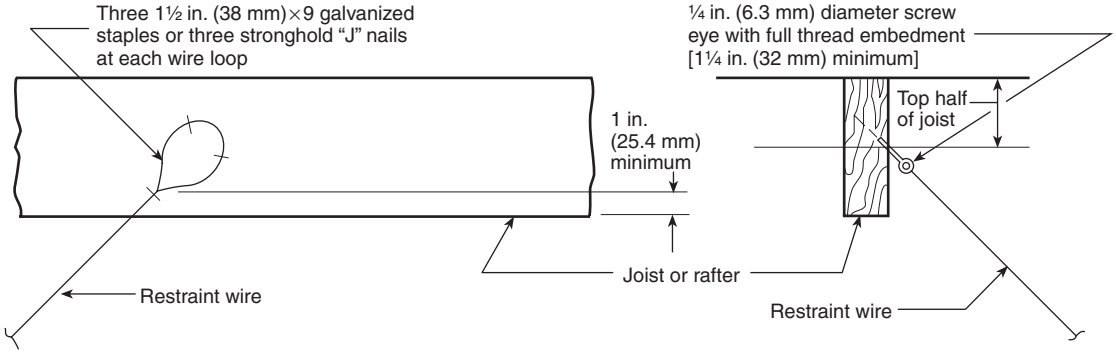

Detail A — Wood joist or rafter

Detail B — At wood joist or rafter

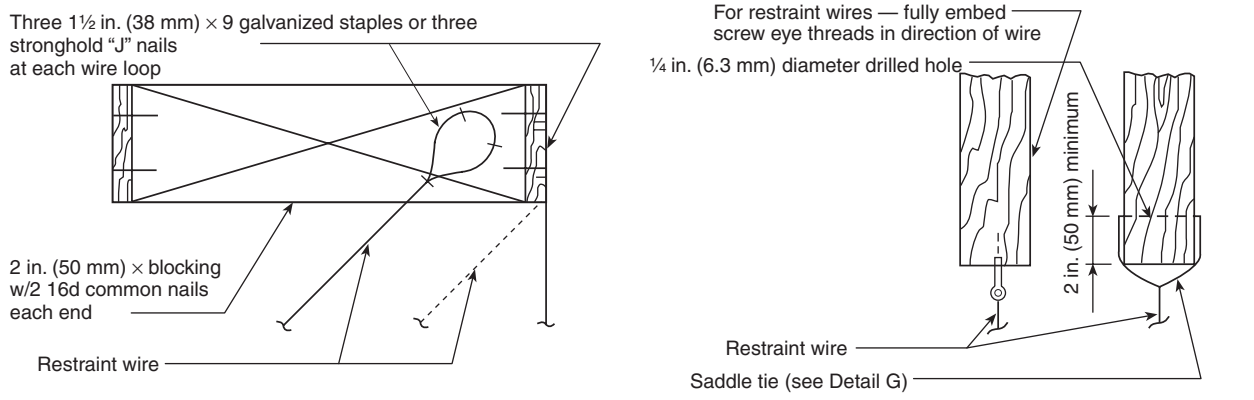

Detail C — At wood joist or block

Detail D — To bottom of joist

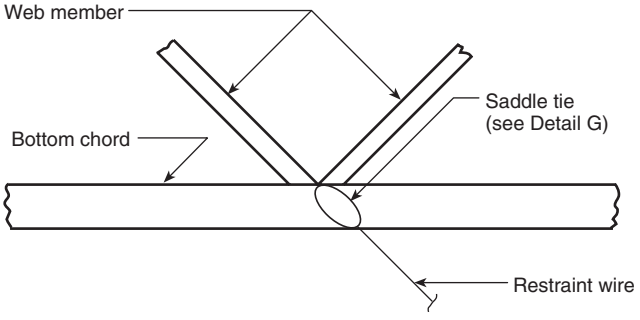

Detail E — Restraint wire parallel to wood truss

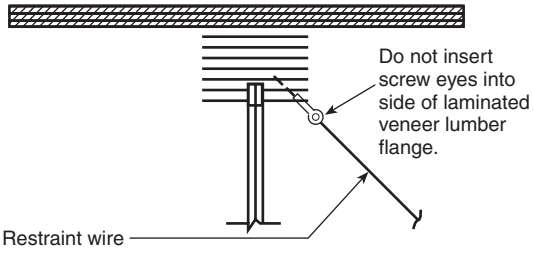

Detail F — Laminated veneer lumber upper flange

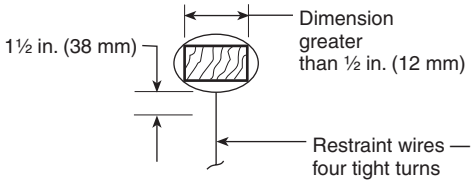

Detail G — Typical saddle tie

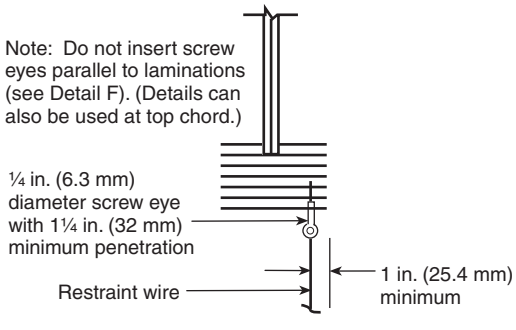

Detail H — Laminated veneer lumber lower flange

FIGURE A.9.3.6.1(d) Acceptable Details — Wire Connections to Wood Framing.

Copyright 2014 National Fire Protection Association (NFPA). Licensed, by agreement, for individual use and download on October 4, 2014 to LEADER and READER for designated user PATTARAPORN SRITRAKOOL. No other reproduction or transmission in any form permitted without written permission of NFPA. For inquires or to report unauthorized use, contact licensing@nfpa.org.

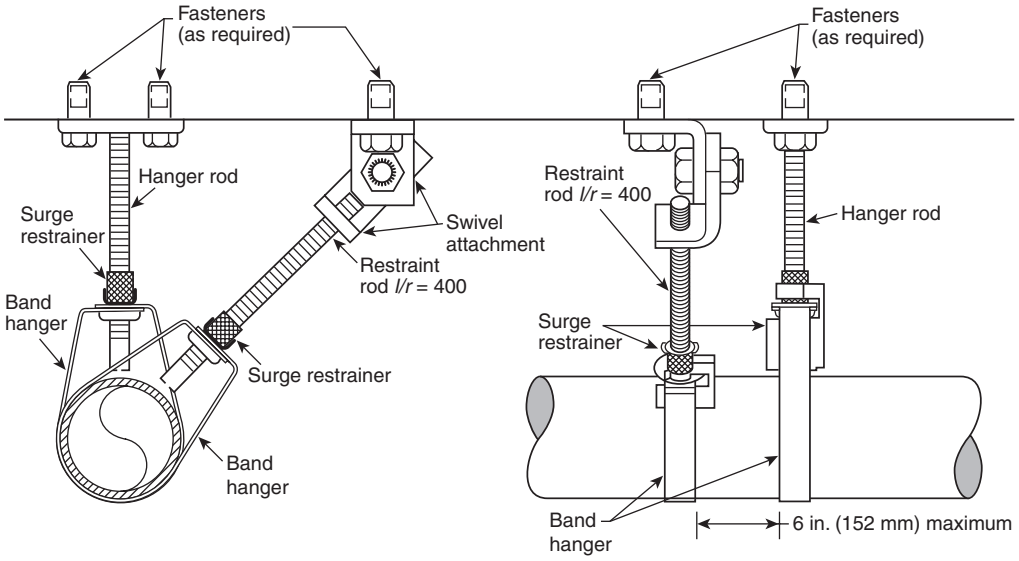

FIGURE A.9.3.6.1(5)(a) Hangers, with Surge Clips, Used in Combination for Restraint of Branch Lines.

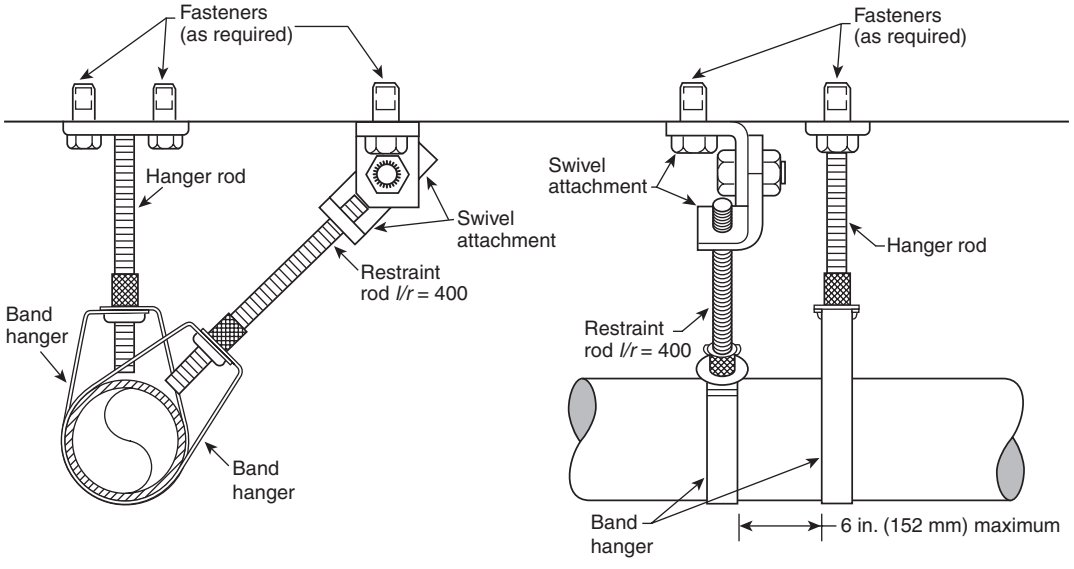

FIGURE A.9.3.6.1(5)(b) Hangers, with Threaded Rod Extended to Pipe, Used in Combination for Restraint of Branch Lines.

(c) AWWA C300, *Reinforced Concrete Pressure Pipe, Steel-Cylinder Type*
(d) AWWA C301, *Prestressed Concrete Pressure Pipe, Steel-Cylinder Type*
(e) AWWA C302, *Reinforced Concrete Pressure Pipe, Non-Cylinder Type*
(f) AWWA C303, *Reinforced Concrete Pressure Pipe, Steel-Cylinder Type, Pretensioned*
(g) AWWA C400, *Standard for Asbestos-Cement Distribution Pipe, 4 in. Through 16 in., (100 mm through 400 mm) for Water Distribution Systems*
(h) AWWA C900, *Polyvinyl Chloride (PVC) Pressure Pipe, 4 in. Through 12 in., for Water Distribution*

[**24:** A.10.1.1]

A.10.1.4 The following pipe design manuals can be used as guides:

(1) AWWA C150, *Thickness Design of Ductile Iron Pipe*
(2) AWWA C401, *Standard Practice for the Selection of Asbestos-Cement Water Pipe*
(3) AWWA C900, *Polyvinyl Chloride (PVC) Pressure Pipe, 4 in. Through 12 in. for Water Distribution*
(4) AWWA C905, *AWWA Standard for Polyvinyl Chloride (PVC) Pressure Pipe and Fabricated Fittings, 14 in. Through 48 in. (350 mm through 1,200 mm)*
(5) AWWA C906, *Standard for Polyethylene (PE) Pressure Pipe and Fittings, 4 in. (100 mm) Through 68 in. (1,600 mm) for Water Distribution and Transmission*

Copyright 2014 National Fire Protection Association (NFPA). Licensed, by agreement, for individual use and download on October 4, 2014 to LEADER and READER for designated user PATTARAPORN SRITRAKOOL. No other reproduction or transmission in any form permitted without written permission of NFPA. For inquires or to report unauthorized use, contact licensing@nfpa.org.

(6) AWWA M41, *Ductile Iron Pipe and Fittings*
(7) *Concrete Pipe Handbook*, American Concrete Pipe Association

[**24:** A.10.1.4]

A.10.1.5 For underground system components, a minimum system pressure rating of 150 psi (10 bar) is specified in 10.1.5, based on satisfactory historical performance. Also, this pressure rating reflects that of the components typically used underground, such as piping, valves, and fittings. Where system pressures are expected to exceed pressures of 150 psi (10 bar), system components and materials manufactured and listed for higher pressures should be used. Systems that do not incorporate a fire pump or are not part of a combined standpipe system do not typically experience pressures exceeding 150 psi (10 bar) in underground piping. However, each system should be evaluated on an individual basis, because the presence of a fire department connection introduces the possibility of high pressures being applied by fire department apparatus. It is not the intent of this section to include the pressures generated through fire department connections as part of the maximum working pressure.

A.10.1.6 The following standards apply to the application of coating and linings:

(1) AWWA C104, *Cement Mortar Lining For Ductile Iron Pipe and Fittings for Water*
(2) AWWA C105, *Polyethylene Encasement for Ductile Iron Pipe Systems*
(3) AWWA C203, *Coal-Tar Protective Coatings and Linings for Steel Water Pipelines Enamel and Tape — Hot Applied*
(4) AWWA C205, *Cement-Mortar Protective Lining and Coating for Steel Water Pipe 4 in. and Larger — Shop Applied*
(5) AWWA C602, *Cement-Mortar Lining of Water Pipe Lines 4 in. and Larger — in Place*
(6) AWWA C116, *Protective Fusion-Bonded Epoxy Coatings for the Interior and Exterior Surfaces of Ductile-Iron and Gray Iron Fittings for Water Supply Service*

For internal diameters of cement-lined ductile iron pipe, see Table A.10.1.6.
[**24:** A.10.1.6]

A.10.2.1 Fittings generally used are cast iron with joints made to the specifications of the manufacturer of the particular type of pipe *(see the standards listed in A.10.3.1)*. Steel fittings also have some applications. The following standards apply to fittings:

(1) ASME B16.1, *Cast-Iron Pipe Flanges and Flanged Fittings*
(2) AWWA C110, *Ductile Iron and Gray Iron Fittings, 3–in. Through 48–in., for Water and Other Liquids*
(3) AWWA C153, *Ductile Iron Compact Fittings, 3 in. through 24 in. and 54 in. through 64 in. for Water Service*
(4) AWWA C208, *Dimensions for Fabricated Steel Water Pipe Fittings*

[**24:** A.10.2.1]

A.10.3.3 Fittings and couplings are listed for specific pipe materials that can be installed underground. Fittings and couplings do not necessarily indicate that they are listed specifically for underground use. [**24:** A.10.3.3]

A.10.3.6.2 It is not necessary to coat mechanical joint fittings or epoxy-coated valves and glands. [**24:** A.10.3.6.2]

A.10.4.1 The following documents apply to the installation of pipe and fittings:

(1) AWWA C603, *Standard for the Installation of Asbestos-Cement Pressure Pipe*
(2) AWWA C600, *Standard for the Installation of Ductile-Iron Water Mains and Their Appurtenances*
(3) AWWA M11, *A Guide for Steel Pipe Design and Installation*
(4) AWWA M41, *Ductile Iron Pipe and Fittings*
(5) *Concrete Pipe Handbook*, American Concrete Pipe Association
(6) *Handbook of PVC Pipe*, Uni-Bell PVC Pipe Association
(7) *Installation Guide for Ductile Iron Pipe*, Ductile Iron Pipe Research Association
(8) *Thrust Restraint Design for Ductile Iron Pipe*, Ductile Iron Pipe Research Association

As there is normally no circulation of water in private fire mains, they require greater depth of covering than do public mains. Greater depth is required in a loose gravelly soil (or in rock) than in compact soil containing large quantities of clay. The recommended depth of cover above the top of underground yard mains is shown in Figure A.10.4.1. [**24:** A.10.4.1]

A.10.5.1 In determining the need to protect aboveground piping from freezing, the lowest mean temperature should be considered as shown in Figure A.10.5.1. [**24:** A.10.5.1]

A.10.6.3.1 Items such as sidewalks or patios should not be included as they are not different from roadways. See Figure A.10.6.3.1. [**24:** A.10.6.3.1]

A.10.6.4 The individual piping standards should be followed for load and bury depth, accounting for the load and stresses imposed by the building foundation.

Figure A.10.6.4 shows location where pipe joints would be prohibited. [**24:** A.10.6.4]

A.10.6.5 Sufficient clearance should be provided when piping passes beneath foundations or footers. See Figure A.10.6.5. [**24:** A.10.6.5]

A.10.6.7 Gray cast iron is not considered galvanically dissimilar to ductile iron. Rubber gasket joints (unrestrained push-on or mechanical joints) are not considered connected electrically. Metal thickness should not be considered a protection against corrosive environments. In the case of cast iron or ductile iron pipe for soil evaluation and external protection systems, see Appendix A of AWWA C105, *Polyethylene Encasement for Ductile Iron Pipe Systems.* [**24:** A.10.6.7]

A.10.6.8 Where lightning protection is provided for a structure, NFPA 780, 4.14 requires that all grounding media, including underground metallic piping systems, be interconnected to provide common ground potential. These underground piping systems are not permitted to be substituted for grounding electrodes but must be bonded to the lightning protection grounding system. Where galvanic corrosion is of concern, this bond can be made via a spark gap or gas discharge tube. [**24:** A.10.6.8]

A.10.6.8.1 While the use of the underground fire protection piping as the grounding electrode for the building is prohibited, *NFPA 70* requires that all metallic piping systems be bonded and grounded to disperse stray electrical currents. Therefore, the fire protection piping will be bonded to other metallic systems and grounded, but the electrical system will need an additional ground for its operation.

A.10.8.1.1 It is a fundamental design principle of fluid mechanics that dynamic and static pressures, acting at changes in size or direction of a pipe, produce unbalanced thrust forces at locations such as bends, tees, wyes, dead ends, and reducer offsets. This design principle includes consideration of lateral soil pressure and pipe/soil friction, variables that can be reliably determined using current soil engineering knowledge. Refer to A.10.8.3 for a list of references for use in calculating and determining joint restraint systems.

Copyright 2014 National Fire Protection Association (NFPA). Licensed, by agreement, for individual use and download on October 4, 2014 to LEADER and READER for designated user PATTARAPORN SRITRAKOOL. No other reproduction or transmission in any form permitted without written permission of NFPA. For inquires or to report unauthorized use, contact licensing@nfpa.org.

Table A.10.1.6 Internal Diameters (IDs) for Cement-Lined Ductile Iron Pipe

Pipe Size (in.)	OD (in.)	Pressure Class	Thickness Class	Wall Thickness	Minimum Lining Thickness*	ID (in.) with Lining
3	3.96	350		0.25	1/16	3.34
3	3.96		51	0.25	1/16	3.34
3	3.96		52	0.28	1/16	3.28
3	3.96		53	0.31	1/16	3.22
3	3.96		54	0.34	1/16	3.16
3	3.96		55	0.37	1/16	3.10
3	3.96		56	0.40	1/16	3.04
4	4.80	350		0.25	1/16	4.18
4	4.80		51	0.26	1/16	4.16
4	4.80		52	0.29	1/16	4.10
4	4.80		53	0.32	1/16	4.04
4	4.80		54	0.35	1/16	3.98
4	4.80		55	0.38	1/16	3.92
4	4.80		56	0.41	1/16	3.86
6	6.90	350		0.25	1/16	6.28
6	6.90		50	0.25	1/16	6.28
6	6.90		51	0.28	1/16	6.22
6	6.90		52	0.31	1/16	6.16
6	6.90		53	0.34	1/16	6.10
6	6.90		54	0.37	1/16	6.04
6	6.90		55	0.40	1/16	5.98
6	6.90		56	0.43	1/16	5.92
8	9.05	350		0.25	1/16	8.43
8	9.05		50	0.27	1/16	8.39
8	9.05		51	0.30	1/16	8.33
8	9.05		52	0.33	1/16	8.27
8	9.05		53	0.36	1/16	8.21
8	9.05		54	0.39	1/16	8.15
8	9.05		55	0.42	1/16	8.09
8	9.05		56	0.45	1/16	8.03
10	11.10	350		0.26	1/16	10.46
10	11.10		50	0.29	1/16	10.40
10	11.10		51	0.32	1/16	10.34
10	11.10		52	0.35	1/16	10.28
10	11.10		53	0.38	1/16	10.22
10	11.10		54	0.41	1/16	10.16
10	11.10		55	0.44	1/16	10.10
10	11.10		56	0.47	1/16	10.04
12	13.20	350		0.28	1/16	12.52
12	13.20		50	0.31	1/16	12.46
12	13.20		51	0.34	1/16	12.40
12	13.20		52	0.37	1/16	12.34
12	13.20		53	0.40	1/16	12.28
12	13.20		54	0.43	1/16	12.22
12	13.20		55	0.46	1/16	12.16
12	13.20		56	0.49	1/16	12.10
14	15.30	250		0.28	3/32	14.55
14	15.30	300		0.30	3/32	14.51
14	15.30	350		0.31	3/32	14.49
14	15.30		50	0.33	3/32	14.45
14	15.30		51	0.36	3/32	14.39
14	15.30		52	0.39	3/32	14.33
14	15.30		53	0.42	3/32	14.27

Copyright 2014 National Fire Protection Association (NFPA). Licensed, by agreement, for individual use and download on October 4, 2014 to LEADER and READER for designated user PATTARAPORN SRITRAKOOL. No other reproduction or transmission in any form permitted without written permission of NFPA. For inquires or to report unauthorized use, contact licensing@nfpa.org.

Table A.10.1.6 *Continued*

Pipe Size (in.)	OD (in.)	Pressure Class	Thickness Class	Wall Thickness	Minimum Lining Thickness*	ID (in.) with Lining
14	15.30		54	0.45	3/32	14.21
14	15.30		55	0.48	3/32	14.15
14	15.30		56	0.51	3/32	14.09
16	17.40	250		0.30	3/32	16.61
16	17.40	300		0.32	3/32	16.57
16	17.40	350		0.34	3/32	16.53
16	17.40		50	0.34	3/32	16.53
16	17.40		51	0.37	3/32	16.47
16	17.40		52	0.40	3/32	16.41
16	17.40		53	0.43	3/32	16.35
16	17.40		54	0.46	3/32	16.29
16	17.40		55	0.49	3/32	16.23
16	17.40		56	0.52	3/32	16.17
18	19.50	250		0.31	3/32	18.69
18	19.50	300		0.34	3/32	18.63
18	19.50	350		0.36	3/32	18.59
18	19.50		50	0.35	3/32	18.61
18	19.50		51	0.35	3/32	18.61
18	19.50		52	0.41	3/32	18.49
18	19.50		53	0.44	3/32	18.43
18	19.50		54	0.47	3/32	18.37
18	19.50		55	0.50	3/32	18.31
18	19.50		56	0.53	3/32	18.25
20	21.60	250		0.33	3/32	20.75
20	21.60	300		0.36	3/32	20.69
20	21.60	350		0.38	3/32	20.65
20	21.60		50	0.36	3/32	20.69
20	21.60		51	0.39	3/32	20.63
20	21.60		52	0.42	3/32	20.57
20	21.60		53	0.45	3/32	20.51
20	21.60		54	0.48	3/32	20.45
20	21.60		55	0.51	3/32	20.39
20	21.60		56	0.54	3/32	20.33
24	25.80	200		0.33	3/32	24.95
24	25.80	250		0.37	3/32	24.87
24	25.80	300		0.40	3/32	24.81
24	25.80	350		0.43	3/32	24.75
24	25.80		50	0.38	3/32	24.85
24	25.80		51	0.41	3/32	24.79
24	25.80		52	0.44	3/32	24.73
24	25.80		53	0.47	3/32	24.67
24	25.80		54	0.50	3/32	24.61
24	25.80		55	0.53	3/32	24.55
24	25.80		56	0.56	3/32	24.49

ID: Internal diameter; OD: Outside diameter.

*Note: This table is appropriate for single lining thickness only. The actual lining thickness should be obtained from the manufacturer. [**24:** Table A.10.1.6]

Copyright 2014 National Fire Protection Association (NFPA). Licensed, by agreement, for individual use and download on October 4, 2014 to LEADER and READER for designated user PATTARAPORN SRITRAKOOL. No other reproduction or transmission in any form permitted without written permission of NFPA. For inquires or to report unauthorized use, contact licensing@nfpa.org.

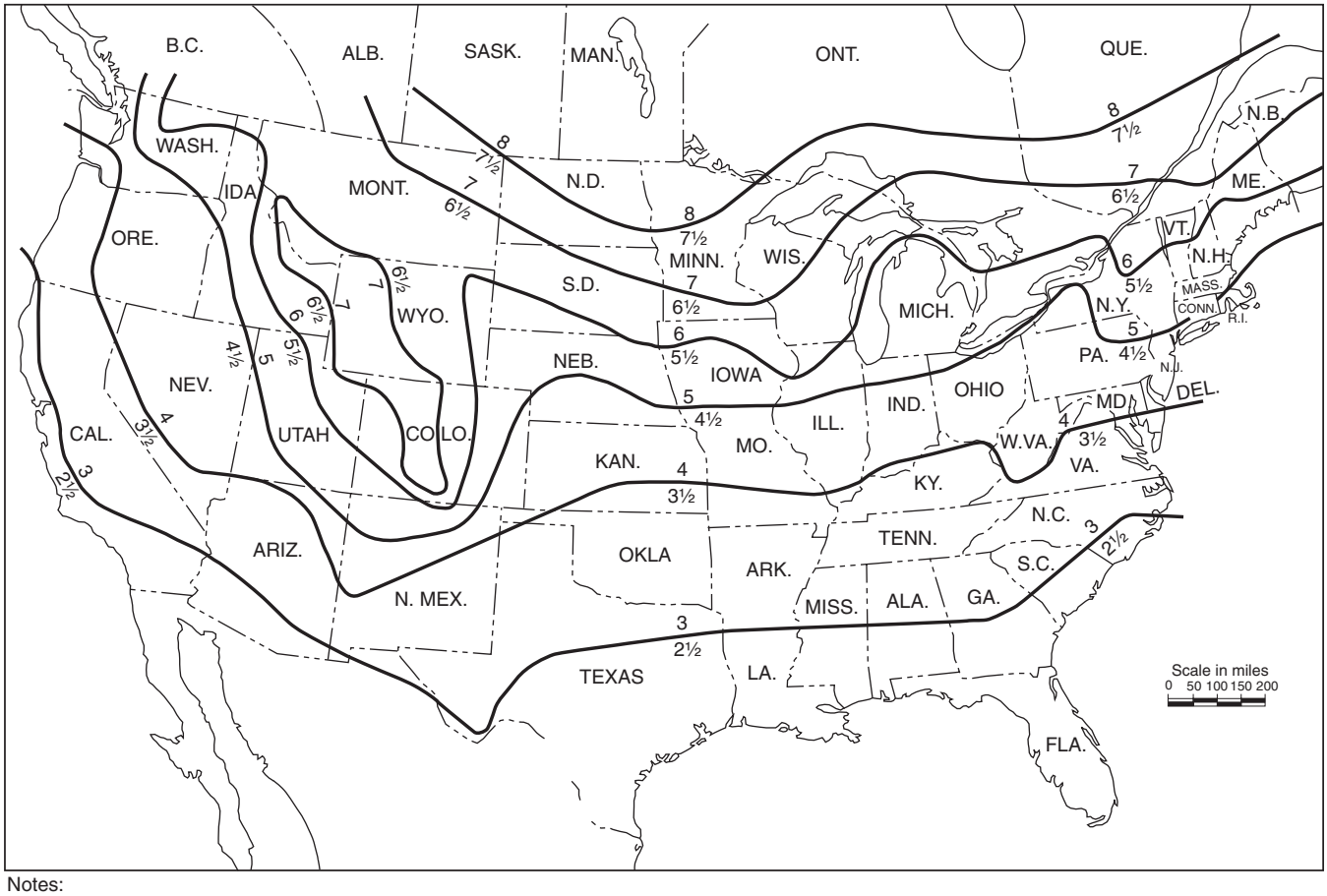

Notes:
1. For SI Units, 1 in. = 25.4 mm; 1 ft = 0.304 m.
2. Where frost penetration is a factor, the depth of cover shown averages 6 in. greater than that usually provided by the municipal waterworks. Greater depth is needed because of the absence of flow in yard mains.

FIGURE A.10.4.1 Recommended Depth of Cover (in feet) Above Top of Underground Yard Mains. [24:Figure A.10.4.1]

Except for the case of welded joints and approved special restrained joints, such as is provided by approved mechanical joint retainer glands or locked mechanical and push-on joints, the usual joints for underground pipe are expected to be held in place by the soil in which the pipe is buried. Gasketed push-on and mechanical joints without special locking devices have limited ability to resist separation due to movement of the pipe.

[**24:** A.10.8.1.1]

A.10.8.1.2 Solvent-cemented and heat-fused joints such as those used with CPVC piping and fittings are considered restrained. They do not require thrust blocks. [**24:** A.10.8.1.2]

A.10.8.2 Concrete thrust blocks are one of the methods of restraint now in use, provided that stable soil conditions prevail and space requirements permit placement. Successful blocking is dependent upon factors such as location, availability and placement of concrete, and possibility of disturbance by future excavations.

Resistance is provided by transferring the thrust force to the soil through the larger bearing area of the block such that the resultant pressure against the soil does not exceed the horizontal bearing strength of the soil. The design of thrust blocks consists of determining the appropriate bearing area of the block for a particular set of conditions. The parameters involved in the design include pipe size, design pressure, angle of the bend (or configuration of the fitting involved), and the horizontal bearing strength of the soil.

Table A.10.8.2(a) gives the nominal thrust at fittings for various sizes of ductile iron and PVC piping. Figure A.10.8.2(a) shows an example of how thrust forces act on a piping bend.

Thrust blocks are generally categorized into two groups — bearing and gravity blocks. Figure A.10.8.2(b) depicts a typical bearing thrust block on a horizontal bend.

The following are general criteria for bearing block design:

(1) The bearing surface should, where possible, be placed against undisturbed soil.
(2) Where it is not possible to place the bearing surface against undisturbed soil, the fill between the bearing surface and undisturbed soil must be compacted to at least 90 percent Standard Proctor density.
(3) Block height *(h)* should be equal to or less than one-half the total depth to the bottom of the block *(H_t)* but not less than the pipe diameter *(D)*.
(4) Block height *(h)* should be chosen such that the calculated block width *(b)* varies between one and two times the height.

Copyright 2014 National Fire Protection Association (NFPA). Licensed, by agreement, for individual use and download on October 4, 2014 to LEADER and READER for designated user PATTARAPORN SRITRAKOOL. No other reproduction or transmission in any form permitted without written permission of NFPA. For inquires or to report unauthorized use, contact licensing@nfpa.org.

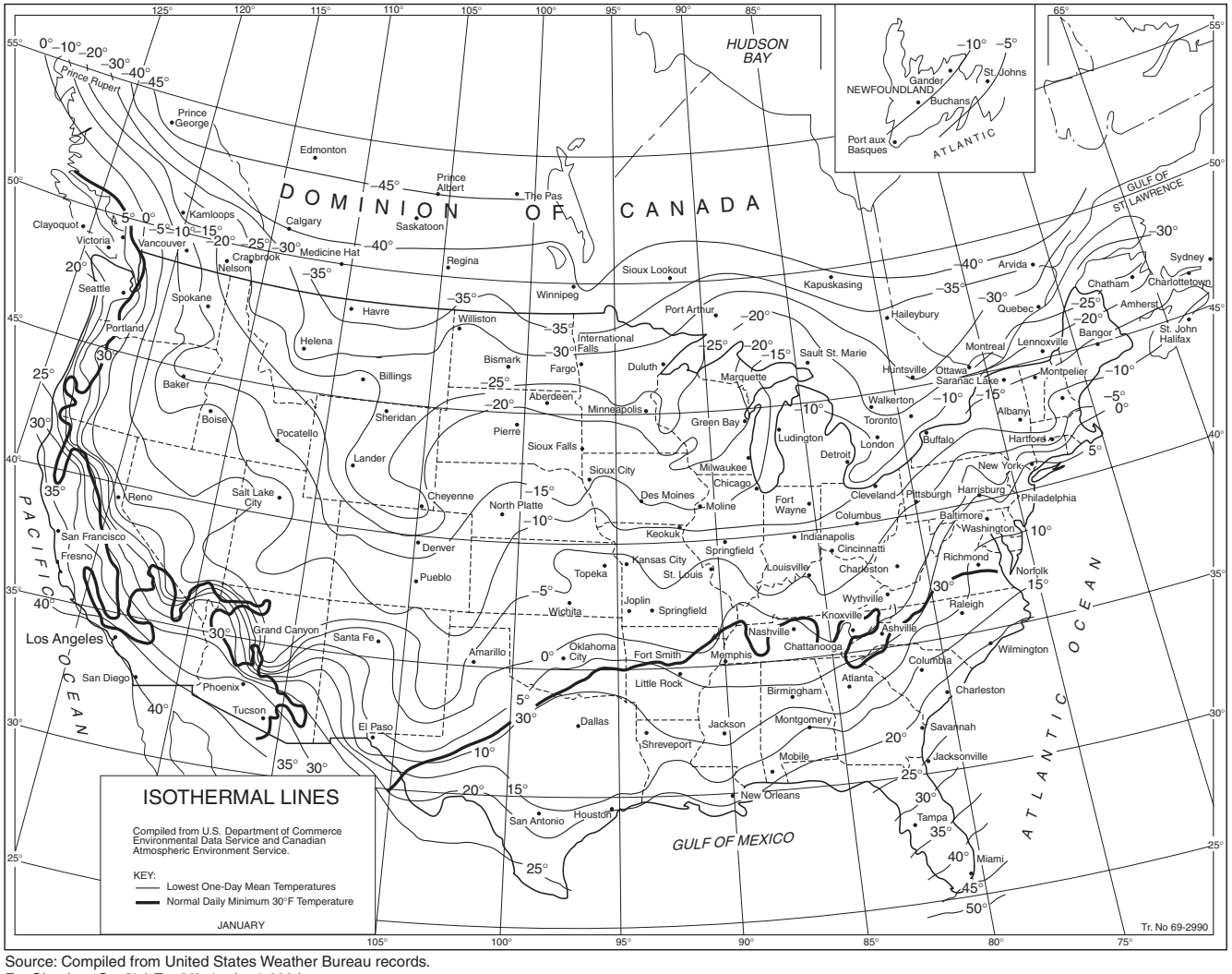

Source: Compiled from United States Weather Bureau records.
For SI units, °C = ⅝ (°F − 32); 1 mi = 1.609 km.

FIGURE A.10.5.1 Isothermal Lines — Lowest One-Day Mean Temperature (°F). [24:Figure A.10.5.1]

(5) Gravity thrust blocks can be used to resist thrust at vertical down bends. In a gravity thrust block, the weight of the block is the force providing equilibrium with the thrust force. The design problem is then to calculate the required volume of the thrust block of a known density. The vertical component of the thrust force in Figure A.10.8.2(c) is balanced by the weight of the block. For required horizontal bearing block areas, see Table A.10.8.2(b).

The required block area (A_b) is as follows:

$$A_b = (h)(b) = \frac{T(S_f)}{S_b}$$

where:
A_b = required block area (ft^2)
h = block height (ft)
b = calculated block width (ft)
T = thrust force (lbf)
S_f = safety factor (usually 1.5)
S_b = bearing strength (lb/ft^2)

Then, for a horizontal bend, the following formula is used:

$$b = \frac{2(S_f)(P)(A)\sin\frac{\theta}{2}}{(h)(S_b)}$$

where:
b = calculated block width (ft)
S_f = safety factor (usually 1.5 for thrust block design)
P = water pressure (lb/in.^{2})
A = cross-sectional area of the pipe based on outside diameter
h = block height (ft)
S_b = horizontal bearing strength of the soil (lb/ft^2) (in.^{2})

A similar approach can be used to design bearing blocks to resist the thrust forces at locations such as tees and dead ends. Typical values for conservative horizontal bearing strengths of various soil types are listed in Table A.10.8.2(c).

Copyright 2014 National Fire Protection Association (NFPA). Licensed, by agreement, for individual use and download on October 4, 2014 to LEADER and READER for designated user PATTARAPORN SRITRAKOOL. No other reproduction or transmission in any form permitted without written permission of NFPA. For inquires or to report unauthorized use, contact licensing@nfpa.org.

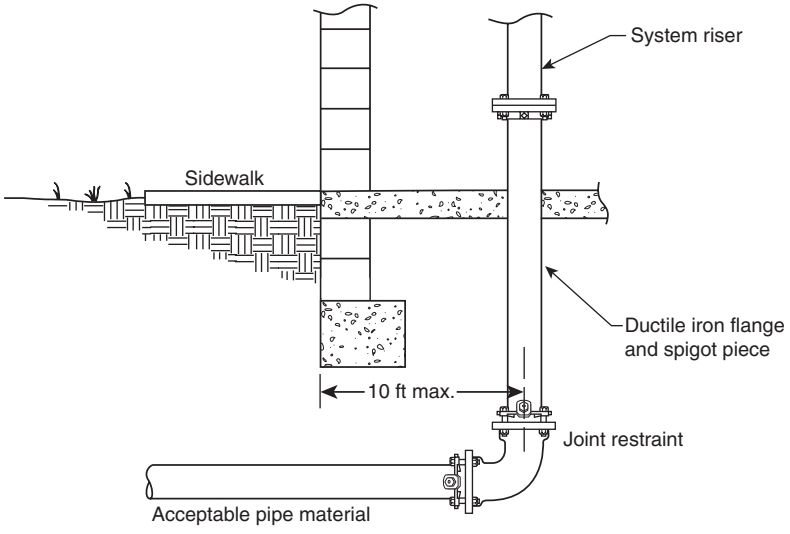

FIGURE A.10.6.3.1 Riser Entrance Location. [24:Figure A.10.6.3.1]

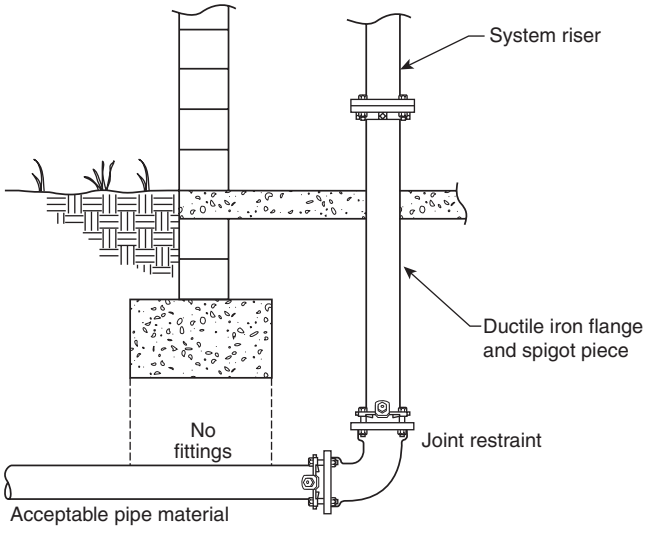

FIGURE A.10.6.4 Pipe Joint Location in Relation to Foundation Footings. [24:Figure A.10.6.4]

In lieu of the values for soil bearing strength shown in Table A.10.8.2(c), a designer might choose to use calculated Rankine passive pressure (P_p) or other determination of soil-bearing strength based on actual soil properties.

It can be easily be shown that $T_y = PA \sin \theta$. The required volume of the block is as follows:

$$V_g = \frac{S_f PA \sin \theta}{W_m}$$

where:
V_g = block volume (ft^3)
S_f = safety factor
P = water pressure (psi)
A = cross-sectional area of the pipe interior
W_m = density of the block material (lb/ft^3)

In a case such as the one shown, the horizontal component of thrust force is calculated as follows:

$$T_x = PA(1 - \cos \theta)$$

where:
T_x = horizontal component of the thrust force
P = water pressure
A = cross-sectional area of the pipe interior

The horizontal component of thrust force must be resisted by the bearing of the right side of the block against the soil. Analysis of this aspect follows the same principles as the previous section on bearing blocks.
[**24:** A.10.8.2]

A.10.8.3 A method for providing thrust restraint is the use of restrained joints. A restrained joint is a special type of joint that is designed to provide longitudinal restraint. Restrained joint systems function in a manner similar to thrust blocks, insofar as the reaction of the entire restrained unit of piping with the soil balances the thrust forces.

The objective in designing a restrained joint thrust restraint system is to determine the length of pipe that must be restrained on each side of the focus of the thrust force. This will be a function of the pipe size, the internal pressure, the depth of cover, and the characteristics of the solid surrounding the pipe.

The following documents apply to the design, calculation, and determination of restrained joint systems:

(1) *Thrust Restraint Design for Ductile Iron Pipe*, Ductile Iron Pipe Research Association
(2) AWWA M41, *Ductile Iron Pipe and Fittings*
(3) AWWA M9, *Concrete Pressure Pipe*
(4) AWWA M11, *Steel Pipe — A Guide for Design and Installation*
(5) *Thrust Restraint Design Equations and Tables for Ductile Iron and PVC Pipe*, EBAA Iron, Inc.

Figure A.10.8.3 shows an example of a typical connection to a fire protection system riser utilizing restrained joint pipe.
[**24:** A.10.8.3]

Copyright 2014 National Fire Protection Association (NFPA). Licensed, by agreement, for individual use and download on October 4, 2014 to LEADER and READER for designated user PATTARAPORN SRITRAKOOL. No other reproduction or transmission in any form permitted without written permission of NFPA. For inquires or to report unauthorized use, contact licensing@nfpa.org.

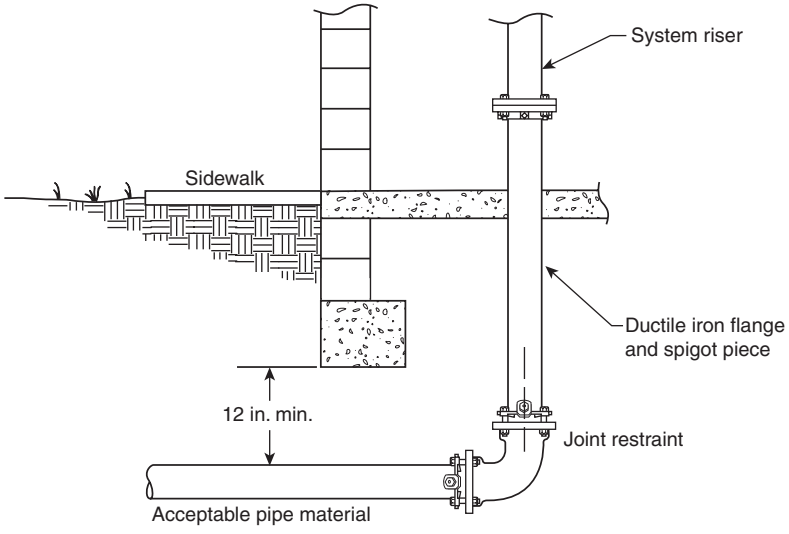

FIGURE A.10.6.5 Piping Clearance from Foundation. [24: Figure A.10.6.5]

Table A.10.8.2(a) Thrust at Fittings at 100 psi (6.9 bar) Water Pressure for Ductile Iron and PVC Pipe

Nominal Pipe Diameter (in.)	Total Pounds					
	Dead End	90 Degree Bend	45 Degree Bend	22½ Degree Bend	11¼ Degree Bend	5⅛ Degree Bend
4	1,810	2,559	1,385	706	355	162
6	3,739	5,288	2,862	1,459	733	334
8	6,433	9,097	4,923	2,510	1,261	575
10	9,677	13,685	7,406	3,776	1,897	865
12	13,685	19,353	10,474	5,340	2,683	1,224
14	18,385	26,001	14,072	7,174	3,604	1,644
16	23,779	33,628	18,199	9,278	4,661	2,126
18	29,865	42,235	22,858	11,653	5,855	2,670
20	36,644	51,822	28,046	14,298	7,183	3,277
24	52,279	73,934	40,013	20,398	10,249	4,675
30	80,425	113,738	61,554	31,380	15,766	7,191
36	115,209	162,931	88,177	44,952	22,585	10,302
42	155,528	219,950	119,036	60,684	30,489	13,907
48	202,683	286,637	155,127	79,083	39,733	18,124

Notes:
(1) For SI units, 1 lb = 0.454 kg; 1 in. = 25.4 mm.
(2) To determine thrust at pressure other than 100 psi (6.9 bar), multiply the thrust obtained in the table by the ratio of the pressure to 100 psi (6.9 bar). For example, the thrust on a 12 in., 90 degree bend at 125 psi (8.6 bar) is 19,353 × 125/100 = 24,191 lb (10,973 kg).
[**24:** Table A.10.8.2(a)]

Copyright 2014 National Fire Protection Association (NFPA). Licensed, by agreement, for individual use and download on October 4, 2014 to LEADER and READER for designated user PATTARAPORN SRITRAKOOL. No other reproduction or transmission in any form permitted without written permission of NFPA. For inquires or to report unauthorized use, contact licensing@nfpa.org.

Table A.10.8.2(b) Required Horizontal Bearing Block Area

Nominal Pipe Diameter (in.)	Bearing Block Area (ft^2)	Nominal Pipe Diameter (in.)	Bearing Block Area (ft^2)	Nominal Pipe Diameter (in.)	Bearing Block Area (ft^2)
3	2.6	12	29.0	24	110.9
4	3.8	14	39.0	30	170.6
6	7.9	16	50.4	36	244.4
8	13.6	18	63.3	42	329.9
10	20.5	20	77.7	48	430.0

Notes:

(1) Although the bearing strength values in this table have been used successfully in the design of thrust blocks and are considered to be conservative, their accuracy is totally dependent on the accurate soil identification and evaluation. The ultimate responsibility for selecting the proper bearing strength of a particular soil type must rest with the design engineer.

(2) Values listed are based on a 90 degree horizontal bend, an internal pressure of 100 psi, a soil horizontal bearing strength of 1,000 lb/ft^2, a safety factor of 1.5, and ductile-iron pipe outside diameters.

(a) For other horizontal bends, multiply by the following coefficients: for 45 degree: 0.541; for 22½ degree: 0.276; for 11¼ degree: 0.139.

(b) For other internal pressures, multiply by ratio to 100 psi.

(c) For other soil horizontal bearing strengths, divide by ratio to 1,000 lb/ft^2.

(d) For other safety factors, multiply by ratio to 1.5.

Example. Using Table A.10.8.2(b), find the horizontal bearing block area for a 6 in. diameter, 45-degree bend with an internal pressure of 150 psi. The soil bearing strength is 3000 lb/ft^2, and the safety factor is 1.5.

From Table A.10.8.2(b), the required bearing block area for a 6 in. diameter, 90-degree bend with an internal pressure of 100 psi and a soil horizontal bearing strength of 1000 psi is 7.9 ft^2.

For example:

$$Area = \frac{7.9\ ft^2 (0.541)\frac{150}{100}}{\frac{3000}{1000}} = 2.1\ ft^2$$

[**24:** Table A.10.8.2(b)]

Table A.10.8.2(c) Horizontal Bearing Strengths

Soil	Bearing Strength, S_b	
	lb/ft^2	kN/m^2
Muck	0	0
Soft clay	1000	47.9
Silt	1500	71.8
Sandy silt	3000	143.6
Sand	4000	191.5
Sandy clay	6000	287.3
Hard clay	9000	430.9

Note: Although the bearing strength values in this table have been used successfully in the design of thrust blocks and are considered to be conservative, their accuracy is totally dependent on accurate soil identification and evaluation. The ultimate responsibility for selecting the proper bearing strength of a particular soil type must rest with the design engineer.

[24: Table A.10.8.2(c)]

A.10.8.3.5 Examples of materials and the standards covering these materials are as follows:

(1) Clamps, steel *(see discussion on steel in the following paragraph)*
(2) Rods, steel *(see discussion on steel in the following paragraph)*
(3) Bolts, steel (ASTM A 307, *Standard Specification for Carbon Steel Bolts and Studs*)
(4) Washers, steel *(see discussion on steel in the following paragraph);* cast iron (Class A cast iron as defined by ASTM A 126, *Standard Specification for Gray Iron Casting for Valves, Flanges and Pipe Fittings*)
(5) Anchor straps and plug straps, steel *(see discussion on steel in the following paragraph)*
(6) Rod couplings or turnbuckles, malleable iron (ASTM A 197, *Standard Specification for Cupola Malleable Iron*)

Steel of modified range merchant quality as defined in U.S. Federal Standard No. 66C, *Standard for Steel Chemical Composition and Harden Ability*, April 18, 1967, change notice No. 2, April 16, 1970, as promulgated by the U.S. Federal Government General Services Administration.

The materials specified in A.10.8.3.5(1) through (6) do not preclude the use of other materials that will also satisfy the requirements of this section.

[**24:** A.10.8.3.5]

A.10.10.2.1 Underground mains and lead-in connections to system risers should be flushed through hydrants at dead ends of the system or through accessible aboveground flushing outlets allowing the water to run until clear. Figure A.10.10.2.1 shows acceptable examples of flushing the system. If water is supplied from more than one source or from a looped system, divisional valves should be closed to produce a high-velocity flow through each single line. The flows specified in Table 10.10.2.1.3 will produce a velocity of at least 10 ft/sec (3 m/sec), which is necessary for cleaning the pipe and for lifting foreign material to an aboveground flushing outlet. [**24:** A.10.10.2.1]

Copyright 2014 National Fire Protection Association (NFPA). Licensed, by agreement, for individual use and download on October 4, 2014 to LEADER and READER for designated user PATTARAPORN SRITRAKOOL. No other reproduction or transmission in any form permitted without written permission of NFPA. For inquires or to report unauthorized use, contact licensing@nfpa.org.

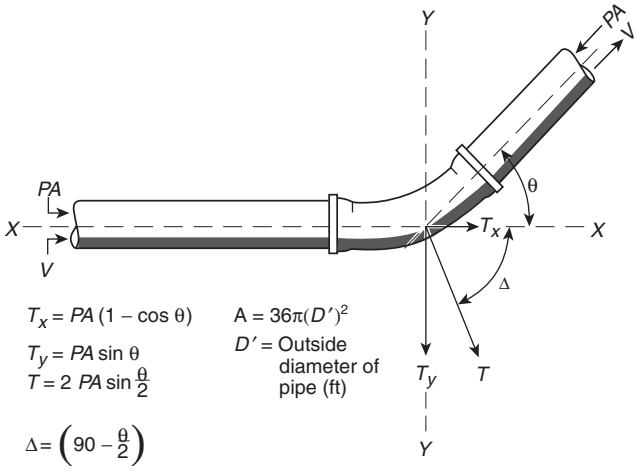

T = Thrust force resulting from change in direction of flow (lbf)
T_x = Component of the thrust force acting parallel to the original direction of flow (lbf)
T_y = Component of the thrust force acting perpendicular to the original direction of flow (lbf)
P = Water pressure (psi^2)
A = Cross-sectional area of the pipe based on outside diameter (in.^{2})
V = Velocity in direction of flow

FIGURE A.10.8.2(a) Thrust Forces Acting on a Bend. [24:Figure A.10.8.2(a)]

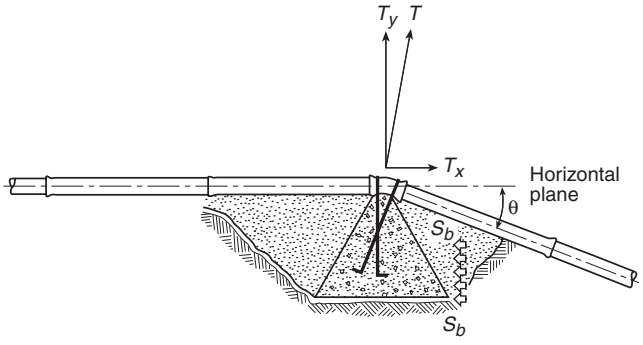

T Thrust force resulting from the change of direction of flow
T_x Horizontal component of the thrust force
T_y Vertical component of the thrust force
S_b Horizontal bearing strength of the soil

FIGURE A.10.8.2(c) Gravity Thrust Block. [24:Figure A.10.8.2(c)]

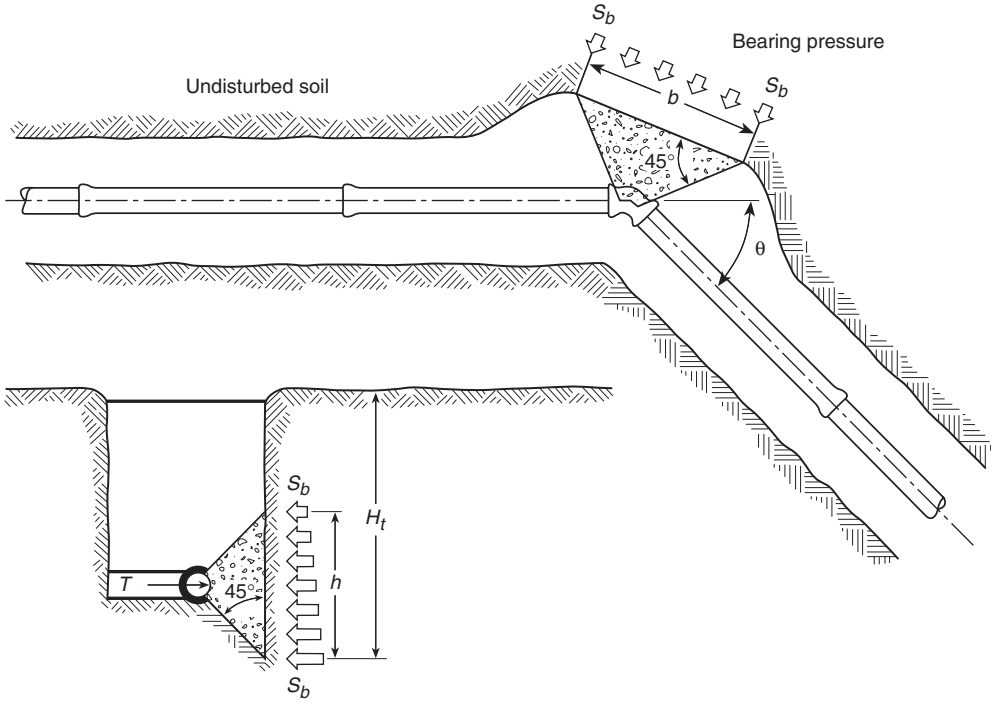

T = thrust force resulting from the change in direction of flow
S_b = horizontal bearing strength of the soil
h = block height
H_t = total depth to bottom of block

FIGURE A.10.8.2(b) Bearing Thrust Block. [24:Figure A.10.8.2(b)]

Copyright 2014 National Fire Protection Association (NFPA). Licensed, by agreement, for individual use and download on October 4, 2014 to LEADER and READER for designated user PATTARAPORN SRITRAKOOL. No other reproduction or transmission in any form permitted without written permission of NFPA. For inquires or to report unauthorized use, contact licensing@nfpa.org.

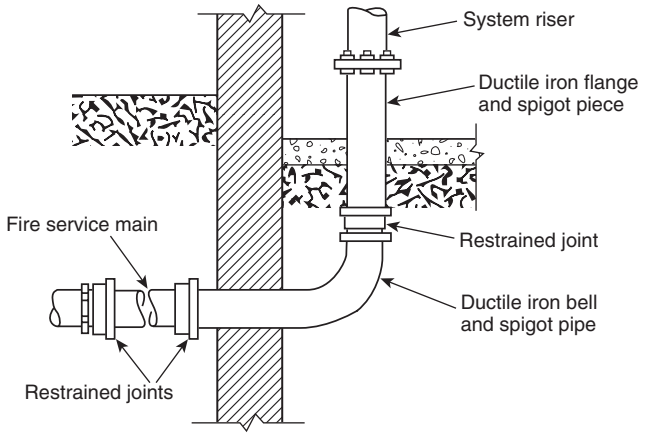

FIGURE A.10.8.3 Typical Connection to a Fire Protection System Riser Illustrating Restrained Joints. [24:Figure A.10.8.3]

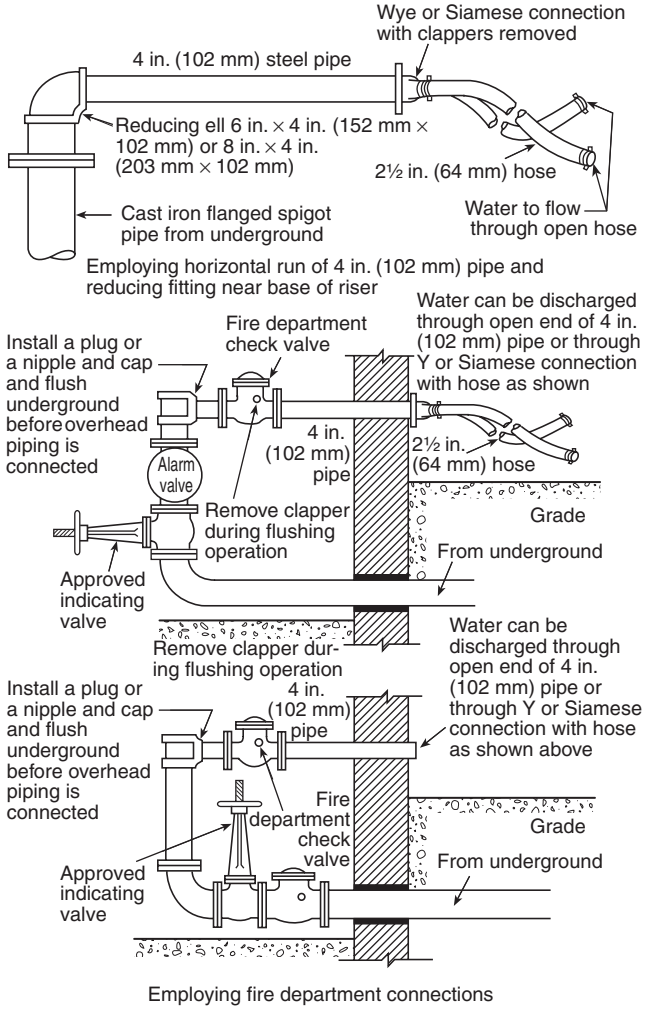

FIGURE A.10.10.2.1 Methods of Flushing Water Supply Connections. [24:Figure A.10.10.2.1]

A.10.10.2.1.3(2) The velocity of approximately 10 ft/sec (3.1 m/sec) was used to develop Table 10.10.2.1.3 because this velocity has been shown to be sufficient for moving obstructive material out of the pipes. It is not important that the velocity equal exactly 10 ft/sec (3.1 m/sec), so there is no reason to increase the flow during the test for slightly different internal pipe dimensions. Note that where underground pipe serves as suction pipe for a fire pump, NFPA 20 requires greater flows for flushing the pipe. [**24:** A.10.10.2.1.3(2)]

A.10.10.2.2.1 A sprinkler system has for its water supply a connection to a public water service main. A 100 psi (6.9 bar) rated pump is installed in the connection. With a maximum normal public water supply of 70 psi (4.8 bar) at the low elevation point of the individual system or portion of the system being tested and a 120 psi (8.3 bar) pump (churn) pressure, the hydrostatic test pressure is 70 psi + 120 psi + 50 psi, or 240 psi (16.5 bar).

To reduce the possibility of serious water damage in case of a break, pressure can be maintained by a small pump, the main controlling gate meanwhile being kept shut during the test.

Polybutylene pipe will undergo expansion during initial pressurization. In this case, a reduction in gauge pressure might not necessarily indicate a leak. The pressure reduction should not exceed the manufacturer's specifications and listing criteria.

When systems having rigid thermoplastic piping such as CPVC are pressure tested, the sprinkler system should be filled with water. The air should be bled from the highest and farthest sprinklers. Compressed air or compressed gas should never be used to test systems with rigid thermoplastic pipe.

A recommended test procedure is as follows: The water pressure is to be increased in 50 psi (3.4 bar) increments until the test pressure described in 10.10.2.2.1 is attained. After each increase in pressure, observations are to be made of the stability of the joints. These observations are to include such items as protrusion or extrusion of the gasket, leakage, or other factors likely to affect the continued use of a pipe in service. During the test, the pressure is not to be increased by the next increment until the joint has become stable. This applies particularly to movement of the gasket. After the pressure has been increased to the required maximum value and held for 1 hour, the pressure is to be decreased to 0 psi while observations are made for leakage. The pressure is again to be slowly increased to the value specified in 10.10.2.2.1 and held for 1 more hour while observations are made for leakage and the leakage measurement is made. [**24:** A.10.10.2.2.1]

A.10.10.2.2.4 Hydrostatic tests should be made before the joints are covered, so that any leaks can be detected. Thrust blocks should be sufficiently hardened before hydrostatic testing is begun. If the joints are covered with backfill prior to testing, the contractor remains responsible for locating and correcting any leakage in excess of that permitted. [**24:** A.10.10.2.2.4]

A.10.10.2.2.6 One acceptable means of completing this test is to utilize a pressure pump that draws its water supply from a full container. At the completion of the 2-hour test, the amount of water to refill the container can be measured to determine the amount of makeup water. To minimize pressure loss, the piping should be flushed to remove any trapped air. Additionally, the piping should be pressurized for 1 day prior to the hydrostatic test to account for expansion, absorption, entrapped air, and so on.

The use of a blind flange or skillet is preferred for use when hydrostatically testing segments of new work. Metal-seated

Copyright 2014 National Fire Protection Association (NFPA). Licensed, by agreement, for individual use and download on October 4, 2014 to LEADER and READER for designated user PATTARAPORN SRITRAKOOL. No other reproduction or transmission in any form permitted without written permission of NFPA. For inquires or to report unauthorized use, contact licensing@nfpa.org.

valves are susceptible to developing slight imperfections during transport, installation, and operation and thus can be likely to leak more than 1 fl oz/in. (1.2 mL/mm) of valve diameter per hour. For this reason, the blind flange should be used when hydrostatically testing.
[**24:** A.10.10.2.2.6]

A.11.1.2 The situation frequently arises where a small area of a higher hazard is surrounded by a lesser hazard. For example, consider a 600 ft^2 (55.7 m^2) area consisting of 10 ft (3.05 m) high on-floor storage of cartoned unexpanded plastic commodities surrounded by a plastic extruding operation in a 15 ft (4.57 m) high building. In accordance with Chapter 12, the density required for the plastic storage must meet the requirements for extra hazard (Group 1) occupancies. The plastic extruding operation should be considered an ordinary hazard (Group 2) occupancy. In accordance with Chapter 11, the corresponding discharge densities should be 0.3 gpm/ft^2 (12.2 mm/min) over 2500 ft^2 (232 m^2) for the storage and 0.2 gpm/ft^2 (8.1 mm/min) over 1500 ft^2 (139 m^2) for the remainder of the area. *(Also see Chapter 11 for the required minimum areas of operation.)*

If the storage area is not separated from the surrounding area by a wall or partition *(see 11.1.2),* the size of the operating area is determined by the higher hazard storage.

For example, the operating area is 2500 ft^2 (232 m^2). The system must be able to provide the 0.3 gpm/ft^2 (12.2 mm/min) density over the storage area and 15 ft (4.57 m) beyond. If part of the remote area is outside the 600 ft^2 (55.7 m^2) plus the 15 ft (4.57 m) overlap, only 0.2 gpm/ft^2 (8.1 mm/min) is needed for that portion.

If the storage is separated from the surrounding area by a floor-to-ceiling/roof partition that is capable of preventing heat from a fire on one side from fusing sprinklers on the other side, the size of the operating area is determined by the occupancy of the surrounding area. In this example, the design area is 1500 ft^2 (139 m^2). A 0.3 gpm/ft^2 (12.2 mm/min) density is needed within the separated area with 0.2 gpm/ft^2 (8.1 mm/min) in the remainder of the remote area.

When the small higher hazard area is larger than the required minimum area dictated by the surrounding occupancy, even when separated by partitions capable of stopping heat, the size of the operating area is determined by the higher hazard storage.

A.11.1.4.1 See A.4.3.

A.11.1.4.2 Appropriate area/density, other design criteria, and water supply requirements should be based on scientifically based engineering analyses that can include submitted fire testing, calculations, or results from appropriate computational models.

Recommended water supplies anticipate successful sprinkler operation. Because of the small but still significant number of uncontrolled fires in sprinklered properties, which have various causes, there should be an adequate water supply available for fire department use.

The hose stream demand required by this standard is intended to provide the fire department with the extra flow they need to conduct mop-up operations and final extinguishment of a fire at a sprinklered property. This is not the fire department manual fire flow, which is determined by other codes or standards. However, it is not the intent of this standard to require that the sprinkler demand be added to the manual fire flow demand required by other codes and standards. While the other codes and standards can factor in the presence of a sprinkler system in the determination of the manual fire flow requirement, the sprinkler system water demand and manual fire flow demand are intended to be separate standalone calculations. NFPA 1 emphasizes this fact by the statement in A.18.4.1 that "It is not the intent to add the minimum fire protection water supplies, such as for a sprinkler system, to the minimum fire flow for manual fire suppression purposes required by this section."

A.11.1.5.2 Where tanks serve sprinklers only, they can be sized to provide the duration required for the sprinkler system, ignoring any hose stream demands. Where tanks serve some combination of sprinklers, inside hose stations, outside hose stations, or domestic/process use, the tank needs to be capable of providing the duration for the equipment that is fed from the tank, but the demands of equipment not connected to the tank can be ignored. Where a tank is used for both domestic/process water and fire protection, the entire duration demand of the domestic/process water does not need to be included in the tank if provisions are made to segregate the tank so that adequate fire protection water is always present or if provisions are made to automatically cut off the simultaneous use in the event of fire.

A.11.1.5.3 Where pumps serve sprinklers only, they can be sized to provide the flow required for the sprinkler system, ignoring any hose stream demands. Where pumps serve some combination of sprinklers, inside hose stations, or outside hose stations, the pump needs to be capable of providing the flow for the equipment that is fed from the pump, but the demands of equipment not connected to the pump can be ignored except for evaluating their impact on the available water supply to the pump.

A.11.1.6.1(3) When a light hazard occupancy, such as a school, contains separate ordinary hazard rooms no more than 400 ft^2 (37.2 m^2), the hose stream allowance and water supply duration would be that required for a light hazard occupancy.

A.11.1.6.2 When the hose demand is provided by a separate water supply, the sprinkler calculation does not include the outside hose demand.

A.11.1.6.4 For fully sprinklered buildings, if hose valves or stations are provided on a combination sprinkler riser and standpipe for fire department use in accordance with NFPA 14, the hydraulic calculation for the sprinkler system is not required to include the standpipe allowance.

A.11.1.7 A series of 10 full-scale fire tests and limited-scale testing were conducted to determine the impact of HVLS fan operation on the performance of sprinkler systems. The project, sponsored by the Property Insurance Research Group (PIRG) and other industry groups, was coordinated by the Fire Protection Research Foundation (FPRF). The complete test report, *High Volume/Low Speed Fan and Sprinkler Operation — Ph. 2 Final Report (2011),* is available from the FPRF. Both control mode density area and early suppression fast response sprinklers were tested. Successful results were obtained when the HVLS fan was shut down upon the activation of the first sprinkler followed by a 90-second delay. Other methods of fan shutdown were also tested including shutdown by activation of air sampling–type detection and ionization-type smoke detectors. Earlier fan shutdown resulted in less commodity damage.

A.11.2.1.1 This approach is based on a general occupancy classification applied to the building or a portion of the building.

Copyright 2014 National Fire Protection Association (NFPA). Licensed, by agreement, for individual use and download on October 4, 2014 to LEADER and READER for designated user PATTARAPORN SRITRAKOOL. No other reproduction or transmission in any form permitted without written permission of NFPA. For inquires or to report unauthorized use, contact licensing@nfpa.org.

A.11.2.2.6 The additional pressure that is needed at the level of the water supply to account for sprinkler elevation is 0.433 psi/ft (0.098 bar/m) of elevation above the water supply.

A.11.2.3.1.4(1) The area of sprinkler operation typically encompasses enough of the floor area to make-up the minimum allowed size of the remote area up to the entire area of a single floor of the building.

A.11.2.3.1.4(3) This section is included to compensate for possible delay in operation of sprinklers from fires in combustible concealed spaces found in wood frame, brick veneer, and ordinary construction.

In order for the minimum 3000 ft^2 (279 m^2) requirement for the size of the remote area to not be extended to the adjacent area, the qualifying concealed space must be separated by the entire fire-rated assembly. Such assemblies often have combustible structural members separating the exterior membranes that can create a concealed combustible space that can qualify for omitting sprinkler protection. If the fire-rated assembly is the qualifying concealed space, an interior fire would greatly reduce the assigned fire-rated duration.

A.11.2.3.1.4(4)(d) Composite wood joists are not considered solid wood joists for the purposes of this section. Their web members are too thin and easily penetrated to adequately compartment a fire in an unsprinklered space. Application of this item is not affected by the depth of the joist channel except in determining the volume. The concealed space above the insulation can be an attic, roof space, or floor space within a floor assembly.

A.11.2.3.1.4(4)(j) The gypsum board (or equivalent material) used as the firestopping will compartment the concealed space and restrict the ability for fire to spread beyond 160 ft^3 (4.5 m^3) zones covering multiple joist channels.

A.11.2.3.2.5 Where extended coverage sprinklers are used and the design area (after appropriate increases) is satisfied by five sprinklers, no additional increase is required. With regard to preaction systems, the discharge criteria of Chapter 11 are written based upon the assumption that the release system will activate before the sprinkler system. It is generally accepted that smoke detectors and rate-of-rise detectors are more sensitive than sprinklers and that fixed-temperature release devices with RTIs lower than sprinklers will react faster than sprinklers at similar spacings and locations.

A.11.2.3.2.7 *Example 1.* A dry pipe sprinkler system (OH2) in a building with a ceiling slope exceeding 2 in 12 in. (16.6 percent slope). The initial area must be increased 30 percent for the dry pipe system and the resulting area an additional 30 percent for the roof slope. If the point 0.2 gpm/ft^2 (8.1 mm/min) over 1500 ft^2 (139 m^2) is chosen from Figure 11.2.3.1.1, the 1500 ft^2 (139 m^2) area is increased 450 ft^2 (42 m^2) to 1950 ft^2 (181 m^2), which is then further increased 585 ft^2 (54 m^2). The final discharge criterion is then 0.2 gpm/ft^2 (8.1 mm/min) over 2535 ft^2 (236 m^2).

Example 2. A wet pipe sprinkler system (light hazard) in a building with a 16 ft 8 in. (5.1 m) ceiling and a slope exceeding 2 in 12 in. (16.6 percent slope) employs quick-response sprinklers qualifying for a 30 percent reduction as permitted by 11.2.3.2.3. The initial area must be increased 30 percent for the ceiling slope and the resulting area decreased 30 percent for quick-response sprinklers. It does not matter whether the reduction is applied first. If a discharge density of 0.1 gpm/ft^2 (4.1 mm/min) over 1500 ft^2 (139 m^2) is chosen from Figure 11.2.3.1.1, the 1500 ft^2 (139 m^2) is increased 450 ft^2 (42 m^2), resulting in 1950 ft^2 (181 m^2), which is then decreased 585 ft^2 (54 m^2). The final design is 0.1 gpm/ft^2 (4.1 mm/min) over 1365 ft^2 (126.8 m^2).

A.11.2.3.3.1 This subsection allows for calculation of the sprinklers in the largest room, so long as the calculation produces the greatest hydraulic demand among selection of rooms and communicating spaces. For example, in a case where the largest room has four sprinklers and a smaller room has two sprinklers but communicates through unprotected openings with three other rooms, each having two sprinklers, the smaller room and group of communicating spaces should also be calculated.

Corridors are rooms and should be considered as such.

Walls can terminate at a substantial suspended ceiling and need not be extended to a rated floor slab above for this section to be applied.

A.11.2.3.4.2 This section is intended to apply to all types of systems including dry pipe and preaction systems.

A.11.3.1.1 In Figure A.11.3.1.1(a), calculate the area indicated by the heavy outline and X. The circle indicates sprinklers.

The protection area for residential sprinklers with extended coverage areas is defined in the listing of the sprinkler as a maximum square area for pendent sprinklers or a square or rectangular area. Listing information is presented in even 2 ft (0.61 m) increments for residential sprinklers. When a sprinkler is selected for an application, its area of coverage must be equal to or greater than both the length and width of the hazard area. For example, if the hazard to be protected is a room 14 ft 6 in. (4.3 m) wide and 20 ft 8 in. (6.2 m) long, a sprinkler that is listed to protect an area of 16 ft × 22 ft (4.9 m × 6.8 m) must be selected. The flow used in the calculations is then selected as the flow required by the listing for the selected coverage. *[See Figure A.11.3.1.1(b).]*

A.11.3.1.2 It should be noted that the provisions of Section 11.2 do not normally apply to the residential sprinkler design approach. The reference to 11.2.3.1.4(4) is merely to provide a consistent approach between the occupancy hazard fire control approach and the residential sprinkler design approach with respect to unsprinklered combustible concealed spaces.

A.11.3.1.2.1 In order for the minimum eight sprinkler requirement for the size of the remote area to not be extended to the adjacent area, the qualifying concealed space must be separated by the entire fire-rated assembly. Such assemblies often have combustible structural members separating the exterior membranes that can create a concealed combustible space that can qualify for omitting sprinkler protection. If the fire-rated assembly is the qualifying concealed space, an interior fire would greatly reduce the assigned fire-rated duration.

A.11.3.2.1 If the system is a deluge type, all the sprinklers need to be calculated even if they are located on different building faces.

A.12.1.1.1 Sprinkler protection criteria are based on the assumption that roof vents and draft curtains are not being used. *(See Section C.6.)*

A.12.1.1.3 Draft curtains have been shown to have a negative effect on sprinkler effectiveness. If they are mandated, extreme care needs to be taken to minimize any potential impacts.

Copyright 2014 National Fire Protection Association (NFPA). Licensed, by agreement, for individual use and download on October 4, 2014 to LEADER and READER for designated user PATTARAPORN SRITRAKOOL. No other reproduction or transmission in any form permitted without written permission of NFPA. For inquires or to report unauthorized use, contact licensing@nfpa.org.

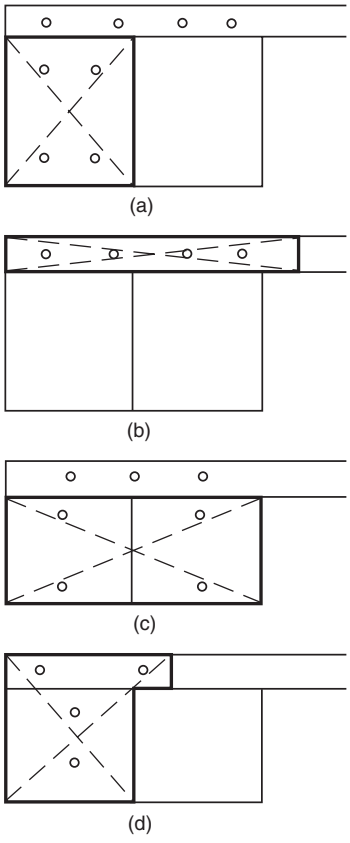

FIGURE A.11.3.1.1(a) Examples of Design Area for Dwelling Units.

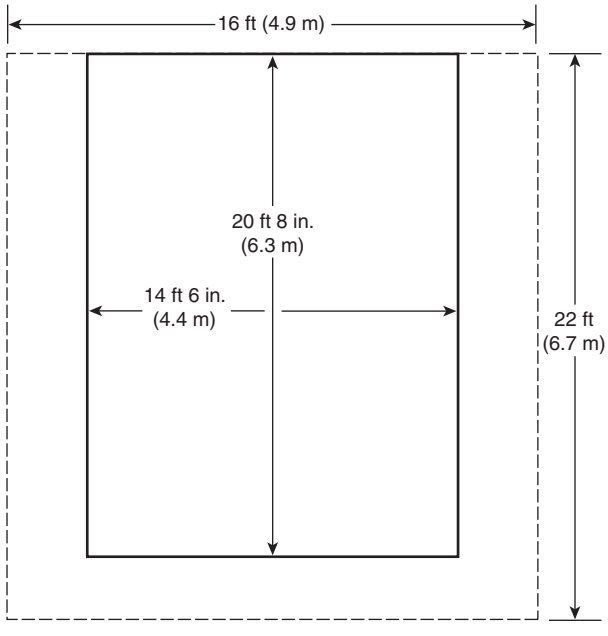

FIGURE A.11.3.1.1(b) Determination of Protection Area of Coverage for Residential Sprinklers.

A.12.1.3 The fire protection system design should consider the maximum storage height. For new sprinkler installations, maximum storage height is the usable height at which commodities can be stored above the floor while the minimum required unobstructed space below sprinklers is maintained. Where evaluating existing situations, maximum storage height is the maximum existing storage height if space between the sprinklers and storage is equal to or greater than that required.

Building heights where baled cotton is stored should allow for proper clearance between the pile height and sprinkler deflectors. Fire tests of high-piled storage have shown that sprinklers are generally more effective if located 1½ ft to 4½ ft (0.45 m to 1.4 m) above the storage height.

When the small higher hazard area is larger than the required minimum area dictated by the surrounding occupancy, even when separated by partitions capable of stopping heat, the size of the operating area is determined by the higher hazard storage.

A.12.1.3.4.1 Batt insulation creates an effective thermal barrier and can be considered the ceiling/roof deck when determining the clearance to ceiling. The insulation needs to be installed in each pocket (not just above the sprinkler) and attached to the ceiling/roof in such a manner that it will not fall out during a fire prior to sprinkler activation.

A.12.1.4 A series of 10 full-scale fire tests and limited-scale testing were conducted to determine the impact of HVLS fan operation on the performance of sprinkler systems. The project, sponsored by the Property Insurance Research Group (PIRG) and other industry groups, was coordinated by the Fire Protection Research Foundation (FPRF). The complete test report, *High Volume/Low Speed Fan and Sprinkler Operation — Ph. 2 Final Report (2011)*, is available from the FPRF. Both control mode density area and early suppression fast response sprinklers were tested. Successful results were obtained when the HVLS fan was shut down upon the activation of the first sprinkler followed by a 90-second delay. Other methods of fan shutdown were also tested including shutdown by activation of air sampling–type detection and ionization-type smoke detectors. Earlier fan shutdown resulted in less commodity damage.

A.12.2 Authorities having jurisdiction have varying requirements for plant first-aid and fire-fighting operations. Examples include no hose stations, hose stations with hose line and nozzles, and hose stations with no hose line or nozzles.

A.12.3 The situation frequently arises where a small area of a higher hazard is surrounded by a lesser hazard. For example, consider a 600 ft^2 (55.7 m^2) area consisting of 10 ft (3.05 m) high on-floor storage of cartoned unexpanded plastic commodities surrounded by a plastic extruding operation in a 15 ft (4.57 m) high building. In accordance with Chapter 12, the density required for the plastic storage must meet the requirements for extra hazard (Group 1) occupancies. The plastic extruding operation should be considered an ordinary hazard (Group 2) occupancy. In accordance with Chapter 11, the corresponding discharge densities should be 0.3 gpm/ft^2 (12.2 mm/min) over 2500 ft^2 (232 m^2) for the storage and 0.2 gpm/ft^2 (8.1 mm/min) over 1500 ft^2 (139 m^2) for the remainder of the area. *(Also see Chapter 11 for the required minimum areas of operation.)*

If the storage area is not separated from the surrounding area by a wall or partition *(see 11.1.2)*, the size of the operating area is determined by the higher hazard storage.

Copyright 2014 National Fire Protection Association (NFPA). Licensed, by agreement, for individual use and download on October 4, 2014 to LEADER and READER for designated user PATTARAPORN SRITRAKOOL. No other reproduction or transmission in any form permitted without written permission of NFPA. For inquires or to report unauthorized use, contact licensing@nfpa.org.

For example, the operating area is 2500 ft^2 (232 m^2). The system must be able to provide the 0.3 gpm/ft^2 (12.2 mm/min) density over the storage area and 15 ft (4.57 m) beyond. If part of the remote area is outside the 600 ft^2 (55.7 m^2) plus the 15 ft (4.57 m) overlap, only 0.2 gpm/ft^2 (8.1 mm/min) is needed for that portion.

If the storage is separated from the surrounding area by a floor-to-ceiling/roof partition that is capable of preventing heat from a fire on one side from fusing sprinklers on the other side, the size of the operating area is determined by the occupancy of the surrounding area. In this example, the design area is 1500 ft^2 (139 m^2). A 0.3 gpm/ft^2 (12.2 mm/min) density is needed within the separated area with 0.2 gpm/ft^2 (8.1 mm/min) in the remainder of the remote area.

Where high temperature–rated sprinklers are installed at the ceiling, high temperature–rated sprinklers also should extend beyond storage in accordance with Table A.12.3.

Table A.12.3 Extension of Installation of High-Temperature Sprinklers over Storage

Design Area for High Temperature–Rated Sprinklers		Distance Beyond Perimeter of High Hazard Occupancy for High Temperature–Rated Sprinklers	
ft^2	m^2	ft	m
2000	185.8	30	9.14
3000	278.7	40	12.2
4000	371.6	45	13.72
5000	464.5	50	15.24
6000	557.4	55	16.76

A.12.4 Wet systems are recommended for storage occupancies. Dry pipe systems should be permitted only where it is impractical to provide heat.

A.12.4.2 Wet systems are recommended for rack storage occupancies. Dry systems are permitted only where it is impractical to provide heat. Preaction systems should be considered for rack storage occupancies that are unheated, particularly where in-rack sprinklers are installed or for those occupancies that are highly susceptible to water damage.

A.12.6 The reasons for using larger orifice sprinklers in storage situations are based on a number of fire tests in recent years that continue to show an advantage of the larger orifice [K-11.2 (161) and K-16.8 (242)] sprinklers over the K-5.6 (80) and even the K-8 (115) orifice sprinklers. Following are four sets of fire test comparisons using constant densities *[see Table A.12.6(a) and Table A.12.6(b)]*:

(1) K-5.6 (80)vs. K-11.2 (161)
   (a) Commodity — idle wood two-way pallets
   (b) 2 stacks × 3 stacks × 8 ft high
   (c) Ceiling height — 30 ft
   (d) Density — constant 0.30 gpm/ft^2
   (e) Test #1 — 165°F rated, K-11.2 sprinklers
   (f) Test #2 — 165°F rated, K-5.6 sprinklers
   (g) Test #1 results — 4 A.S. operated
   (h) Test #2 results — 29 A.S. operated, less fire control and greater temperatures

Table A.12.6(a) Ceiling Type

Fire Type	Ceiling Type	Sprinkler Distance Below Ceiling (in.)	Time to Activation (seconds)	Size of Fire at Activation (Btu/s)
Fast-growing fire	Insulated deck	1	76	450
	Steel	1	97	580
	Wood	1	71	420
	Insulated deck	12	173	1880
	Steel	12	176	1930
	Wood	12	172	1900
Slow-growing fire	Insulated deck	1	281	220
	Steel	1	375	390
	Wood	1	268	200
	Insulated deck	12	476	630
	Steel	12	492	675
	Wood	12	473	620

Table A.12.6(b) Ceiling Arrangement

Situation	Fire	Time to Activate Sprinkler (seconds)	Fire Size at Time of Activation (Btu/s)
Ceiling with pocket	Fast	86 to 113	585
Sprinkler 12 in. below ceiling	Fast	172 to 176	1880 to 1900
Ceiling with pocket	Slow	288 to 395	490
Sprinkler 12 in. below ceiling	Slow	473 to 492	620 to 675

(2) K-8.0 vs. K-11.2 vs. K-16.8
   (a) Commodity — idle wood four-way pallets
   (b) Two stacks × three stacks × 12 ft high
   (c) Ceiling height — 30 ft
   (d) Density — constant 0.6 gpm/ft^2
   (e) Test #1 — 286°F rated, K-8 sprinklers
   (f) Test #2 — 165°F rated, K-11.2 sprinklers
   (g) Test #3 — 165°F rated, K-16.8 sprinklers
   (h) Test #1 results — 10 A.S. operated, 658°C maximum steel temperature, fire spread to all sides
   (i) Test #2 results — 13 A.S. operated, 94°C maximum steel temperature, fire spread to three sides
   (j) Test #3 results — 6 A.S. operated, 54°C maximum steel temperature, fire spread (just reached) one side

(3) K-5.6 vs. K-16.8
   (a) Commodity — FMRC standard plastic commodity rack style 9 ft high
   (b) Ceiling height — 30 ft
   (c) Density — 0.45 gpm/ft^2
   (d) Test #1 — K-5.6 orifice sprinklers
   (e) Test #2 — K-16.8 orifice sprinklers

Copyright 2014 National Fire Protection Association (NFPA). Licensed, by agreement, for individual use and download on October 4, 2014 to LEADER and READER for designated user PATTARAPORN SRITRAKOOL. No other reproduction or transmission in any form permitted without written permission of NFPA. For inquires or to report unauthorized use, contact licensing@nfpa.org.

(f) Test #1 results — 29 A.S. operated, 14 pallet loads consumed
(g) Test #2 results — 5 A.S. operated, 2 pallet loads consumed

(4) K-8.0 vs. K-16.8
(a) Commodity — FMRC standard plastic commodity rack stage 14 ft high
(b) Ceiling height — 25 ft
(c) Density — 0.60 gpm/ft^2
(d) Test #1 — K-8.0 sprinklers
(e) Test #2 — K-16.8 sprinklers
(f) Test #1 results — 29 A.S. operated, 25 pallet loads consumed
(g) Test #2 results — 7 A.S. operated, 4 pallet loads consumed

On an equal density basis, the fire test comparisons show the advantage of the larger orifices. A possibly even bigger advantage can be seen when investigating the performance of larger orifice sprinklers in the real world condition of high initial operating pressures.

The volume of water discharged through the larger K-factor for the initial sprinklers has three significant effects:

(1) First, the increase in sheer volume flowing through the larger orifice enhances performance. For example, a 165 psi initial operating pressure would provide 102.8 gpm from a K-8, while the K-16.8 will discharge 215.8 gpm.
(2) Second, fire testing at high pressures (100+ psi) with K-5.6 and K-8 (when high fire updrafts occur) has shown less water penetration and more sprinkler skipping. When fire testing the K-11 and K-16.8 sprinklers at 100+ psi, more water penetration is evident and little or no sprinkler skipping has occurred.
(3) Third, with such high initial discharge rates among K-16.8 sprinklers, the friction loss in the supply pipes would be greater. This would result in lower initial pressures than a K-8 as well as being farther down the water supply curve with greater flows resulting in lower initial operating pressures.

Figure A.12.6 highlights the differences between the K-8 and K-16.8 initial operating pressures.

The higher flow rate of the K-16.8 sprinkler results in greater friction losses in the initial operating heads as compared to the K-8 sprinkler. Combined with the lower pressure available on the water supply curve, the end result is a self-regulating K-factor allowing greater initial pressures without a negative impact.

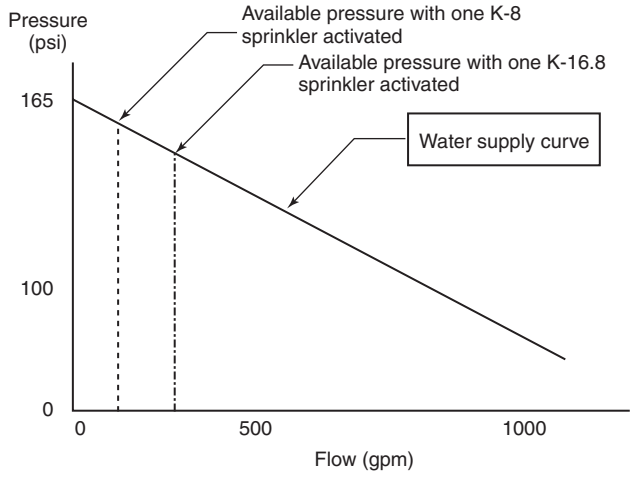

FIGURE A.12.6 Available Pressure Comparison.

Table A.12.6(c) summarizes the paper product testing.

The results. The tests indicated that even at a high temperature of 286°F, the K-8 sprinklers operating at higher pressures were not effective in controlling the fire. Conversely, the K-16.8 sprinkler was able to control the fire at the lower temperature [155°F (68°C)], by operating sooner, and at lower, self-regulating flowing pressures.

Conclusions. The larger K-factor of the K-16.8 sprinkler is not affected by high initial operating pressures. In fact, the protection is enhanced, providing better fire protection.

The ability to use lower-rated temperatures, such as 155°F (68°C) in lieu of 286°F (141°C), shows that the performance of the initial operating sprinklers is effective in controlling the fire. Therefore, using high-temperature heads to reduce the number of surrounding rings of sprinklers to open is not necessary when using the K-16.8 technology.

In short, the K-16.8 sprinkler proved highly effective when subjected to high initial operating pressures.

Table A.12.6(c) Paper Product Testing Results

	Test Date			
Test Parameters	**3/25/98**	**3/18/98***	**4/4/98**	**6/4/98†**
Sprinklers	K-8	K-8	K-11	K-16.8
Temperature	286°F	286°F	165°F	155°F
Storage Type	4 tier pyramid	5 tier pyramid	4 tier pyramid	5 tier pyramid
Storage Height	16 ft	22 ft	16 ft	22 ft
Ceiling Height	30 ft	31 ft	30 ft	31 ft
Sprinkler Flow Pressure	22.6 psi	175 psi	11.9 psi	130 psi
Number of Operated Sprinklers	15	2	10	2
Peak Gas Temperature	—	868°F	—	424°F
Peak Steel Temperature	—	421°F	—	113°F
Fire Spread Across Aisle (30 in.)	N/A	Yes	N/A	No

*This test was run with a fire brigade response of 20:00 minutes.
†This test was run with a fire brigade response of 7:00 minutes.

Copyright 2014 National Fire Protection Association (NFPA). Licensed, by agreement, for individual use and download on October 4, 2014 to LEADER and READER for designated user PATTARAPORN SRITRAKOOL. No other reproduction or transmission in any form permitted without written permission of NFPA. For inquires or to report unauthorized use, contact licensing@nfpa.org.

A.12.6.4 Modification of an existing system includes extending sprinkler protection into adjacent areas.

A.12.7.2 When a light hazard occupancy, such as a school, contains separate ordinary hazard storage rooms no more than 400 ft^2 (37.2 m^2), the hose stream demand would be that required for a light hazard occupancy.

A.12.7.2(3) When a light hazard occupancy, such as a school, contains separate ordinary hazard rooms no more than 400 ft^2 (37.2 m^2), the hose stream allowance and water supply duration would be that required for a light hazard occupancy.

A.12.8.1 Where tanks serve sprinklers only, they can be sized to provide the duration required for the sprinkler system, ignoring any hose stream demands. Where tanks serve some combination of sprinklers, inside hose stations, outside hose stations, or domestic/process use, the tank needs to be capable of providing the duration for the equipment that is fed from the tank, but the demands of equipment not connected to the tank can be ignored. Where a tank is used for both domestic/process water and fire protection, the entire duration demand of the domestic/process water does not need to be included in the tank if provisions are made to segregate the tank so that adequate fire protection water is always present or if provisions are made to automatically cut off the simultaneous use in the event of fire.

A.12.8.2 Where pumps serve sprinklers only, they can be sized to provide the flow required for the sprinkler system, ignoring any hose stream demands. Where pumps serve some combination of sprinklers, inside hose stations, or outside hose stations, the pump needs to be capable of providing the flow for the equipment that is fed from the pump, but the demands of equipment not connected to the pump can be ignored.

A.12.9.1 In order for the minimum 3000 ft^2 (279 m^2) requirement for the size of the remote area to not be extended to the adjacent area, the qualifying concealed space must be separated by the entire fire-rated assembly. Such assemblies often have combustible structural members separating the exterior membranes that can create a concealed combustible space that can qualify for omitting sprinkler protection. If the fire-rated assembly is the qualifying concealed space, an interior fire would greatly reduce the assigned fire-rated duration.

A.12.9.2(4) Composite wood joists are not considered solid wood joists for the purposes of this section. Their web members are too thin and easily penetrated to adequately compartment a fire in an unsprinklered space. Application of this item is not affected by the depth of the joist channel except in determining the volume. The concealed space above the insulation can be an attic, roof space, or floor space within a floor assembly.

A.12.9.2(10) The gypsum board (or equivalent material) used as the firestopping will compartment the concealed space and restrict the ability for fire to spread beyond 160 ft^3 (4.5 m^3) zones covering multiple joist channels.

A.12.10.1 This subsection allows for calculation of the sprinklers in the largest room, so long as the calculation produces the greatest hydraulic demand among selection of rooms and communicating spaces. For example, in a case where the largest room has four sprinklers and a smaller room has two sprinklers but communicates through unprotected openings with three other rooms, each having two sprinklers, the smaller room and group of communicating spaces should also be calculated.

Corridors are rooms and should be considered as such.

Walls can terminate at a substantial suspended ceiling and need not be extended to a rated floor slab above for this section to be applied.

A.12.11 Detection systems, concentrate pumps, generators, and other system components that are essential to the operation of the system should have an approved standby power source.

Where high-expansion foam is contemplated as the protection media, consideration should be given to possible damage to the commodity from soaking and corrosion. Consideration also should be given to the problems associated with the removal of the foam after discharge.

A.12.12 Idle pallet storage introduces a severe fire condition. Stacking idle pallets in piles is the best arrangement of combustibles to promote rapid spread of fire, heat release, and complete combustion. After pallets are used for a short time in warehouses, they dry out and edges become frayed and splintered. In this condition, they are subject to easy ignition from a small ignition source. Again, high piling increases considerably both the challenge to sprinklers and the probability of involving a large number of pallets when fire occurs. Therefore, it is preferable to store pallets outdoors where possible.

A fire in stacks of idle plastic or wood pallets is one of the greatest challenges to sprinklers. The undersides of the pallets create a dry area on which a fire can grow and expand to other dry or partially wet areas. This process of jumping to other dry, closely located, parallel, combustible surfaces continues until the fire bursts through the top of the stack. Once this happens, very little water is able to reach the base of the fire. The only practical method of stopping a fire in a large concentration of pallets with ceiling sprinklers is by means of prewetting. In high stacks, this cannot be done without abnormally high water supplies. The storage of empty wood pallets should not be permitted in an unsprinklered warehouse containing other storage.

A series of seven large-scale fire tests involving idle wood pallets stored on the floor was conducted at Underwriters Laboratories in 2009 and 2010. This testing was conducted to investigate the performance of an upright sprinkler having a nominal K-factor of 11.2 (160) when installed to protect a 8 ft (2.4 m) high array of new 4-way entry, softwood pallets under a 30 ft (9.1 m) ceiling. The pallets used for this test series were supplied by CHEP USA. The impact of the sprinkler temperature rating on fire control performance was the key variable investigated during this test series. Except for the temperature rating of the sprinkler's heat responsive element, the same sprinkler design was used for all seven tests. Three tests were conducted using 286°F (141°C) temperature-rated sprinklers, two tests were conducted using 200°F (93°C) temperature-rated sprinklers, and two tests conducted using 155°F (68°C) temperature-rated sprinklers. The ignition location for all tests was centered between four sprinklers. To enhance test repeatability, the four sprinklers nearest the ignition location were arranged to discharge water when the first sprinkler operated. The results of this test series are summarized in Table A.12.12(a).

The results of this large-scale fire test series indicated that sprinklers in the 155°F (68°C) and 200°F (93°C) temperature ratings performed significantly better than the 286°F (141°C) temperature-rated sprinklers as evidenced by a reduced number of operated sprinklers and lower steel temperatures.

Copyright 2014 National Fire Protection Association (NFPA). Licensed, by agreement, for individual use and download on October 4, 2014 to LEADER and READER for designated user PATTARAPORN SRITRAKOOL. No other reproduction or transmission in any form permitted without written permission of NFPA. For inquires or to report unauthorized use, contact licensing@nfpa.org.

Table A.12.12(a) Summary of Fire Test Data for Idle Pallets (4-Way Entry Softwood) Stored on Floor

Test Date	Test Array	Nominal Storage Height ft (m)	Ceiling Height ft (m)	Sprinkler Information	Number of Operated Sprinklers	Time of First Sprinkler Operation (min:sec)	Time of Last Sprinkler Operation (min:sec)	Max. 1 Min. Ave. Steel Temp. °F (°C)
9/1/2009	2 × 3 with 6 in. (152 mm) longitudinal flue main array 2 × 1 target pallets on each end with 6 in. (152 mm) longitudinal and transverse flues	8 (2.4)	30 (9.1)	286°F, K-11.2, 0.45 gpm/ft^2 (141°C, K-160, 18.3 mm/min)	12	5:00	23:03	220 (104)
9/10/2009	2 × 3 with 6 in. (152 mm) longitudinal flue main array 2 × 1 target pallets on each end with 6 in. (152 mm) longitudinal and transverse flues	8 (2.4)	30 (9.1)	286°F, K-11.2, 0.45 gpm/ft^2 (141°C, K-160, 18.3 mm/min)	13	5:05	19:10	208 (98)
9/11/2009	2 × 3 with 6 in. (152 mm) longitudinal flue main array 2 × 1 target pallets on each end with 6 in. (152 mm) longitudinal and transverse flues	8 (2.4)	30 (9.1)	286°F, K-11.2, 0.45 gpm/ft^2 (141°C, K-160, 18.3 mm/min)	16	5:48	19:04	228 (109)
6/21/2010	2 × 3 with 6 in. (152 mm) longitudinal flue main array 2 × 1 target pallets on each end with 6 in. (152 mm) longitudinal and transverse flues	8 (2.4)	30 (9.1)	200°F, K-11.2, 0.45 gpm/ft^2 (93°C, K-160, 18.3 mm/min)	4	4:10	4:10	134 (57)
6/22/2010	2 × 3 with 6 in. (152 mm) longitudinal flue main array 2 × 1 target pallets on each end with 6 in. (152 mm) longitudinal and transverse flues	8 (2.4)	30 (9.1)	200°F, K-11.2, 0.45 gpm/ft^2 (93°C, K-160, 18.3 mm/min)	4	3:34	3:34	135 (57)
6/23/2010	2 × 3 with 6 in. (152 mm) longitudinal flue main array 2 × 1 target pallets on each end with 6 in. (152 mm) longitudinal and transverse flues	8 (2.4)	30 (9.1)	155°F, K-11.2, 0.45 gpm/ft^2 (68°C, K-160, 18.3 mm/min)	4	3:46	3:46	115 (46)
6/23/2010	2 × 3 with 6 in. (152 mm) longitudinal flue main array 2 × 1 target pallets on each end with 6 in. (152 mm) longitudinal and transverse flues	8 (2.4)	30 (9.1)	155°F, K-11.2, 0.45 gpm/ft^2 (68°C, K-160, 18.3 mm/min)	4	3:09	3:09	113 (45)

Copyright 2014 National Fire Protection Association (NFPA). Licensed, by agreement, for individual use and download on October 4, 2014 to LEADER and READER for designated user PATTARAPORN SRITRAKOOL. No other reproduction or transmission in any form permitted without written permission of NFPA. For inquires or to report unauthorized use, contact licensing@nfpa.org.

Table A.12.12(b) Control Mode Density/Area Sprinkler Protection for Indoor Storage of Idle Wood Pallets

Type of Sprinkler	Location of Storage	Nominal K-Factor	Maximum Storage Height		Maximum Ceiling/Roof Height		Sprinkler Density		Area of Operation		Hose Stream Allowance		Water Supply Duration (hours)
			ft	m	ft	m	gpm/ft²	mm/min	ft²	m²	gpm	L/min	
Control mode density/area	On floor	8 (115) or larger	Up to 6	Up to 1.8	20	6.1	0.2	8.2	3000*	279*	500	1900	1½
	On floor	11.2 (160) or larger	Up to 8	Up to 2.4	30	9.1	0.45	18.3	2500	232	500	1900	1½
	On floor or rack without solid shelves	11.2 (160) or larger	>8 to 12	>2.4 to 3.7	30	9.1	0.6	24.5	3500	325	500	1900	1½
			>12 to 20	>3.7 to 6.1	30	9.1	0.6	24.5	4500	418	500	1900	1½
	On floor	16.8 (240) or larger	Up to 20	Up to 6.1	30	9.1	0.6	24.5	2000	186	500	1900	1½

*The area of sprinkler operation can be permitted to be reduced to 2000 ft² (186 m²) when sprinklers having a nominal K-factor of 11.2 (160) or larger are used, or if high temperature–rated sprinklers having a nominal K-factor of 8.0 (115) are used.

A.12.12.1.1 Table A.12.12.1.1 gives recommended clearances between outside idle wood pallet storage and a building. If plastic pallets are stored outdoors, consideration should be given to the anticipated radiated heat produced by the materials used to construct the pallet to establish the appropriate separation distance. *[See Table A.12.12(b)]*

A.14.2 The following procedure should be followed in determining the proper density and area as specified in Chapter 12:

(1) Determine the commodity class
(2) Select the density and area of application
(3) Adjust the required density for storage height

Table A.12.12.1.1 Recommended Clearance Between Outside Idle Wood Pallet Storage and Building

Wall Construction		Minimum Distance Between Wall and Storage					
		Under 50 Pallets		50 to 200 Pallets		Over 200 Pallets	
Wall Type	Openings	ft	m	ft	m	ft	m
Masonry	None	0	0	0	0	0	0
	Wired glass with outside sprinklers and 1-hour doors	0	0	10	3.1	20	6.1
	Wired or plain glass with outside sprinklers and ¾-hour doors	10	3.1	20	6.1	30	9.1
Wood or metal with outside sprinklers		10	3.1	20	6.1	30	9.1
Wood, metal, or other		20	6.1	30	9.1	50	15.2

Notes:
(1) Fire-resistive protection comparable to that of the wall also should be provided for combustible eaves lines, vent openings, and so forth.
(2) Where pallets are stored close to a building, the height of storage should be restricted to prevent burning pallets from falling on the building.
(3) Manual outside open sprinklers generally are not a reliable means of protection unless property is attended to at all times by plant emergency personnel.
(4) Open sprinklers controlled by a deluge valve are preferred.

Copyright 2014 National Fire Protection Association (NFPA). Licensed, by agreement, for individual use and download on October 4, 2014 to LEADER and READER for designated user PATTARAPORN SRITRAKOOL. No other reproduction or transmission in any form permitted without written permission of NFPA. For inquires or to report unauthorized use, contact licensing@nfpa.org.

(4) Increase the operating area by 30 percent where a dry pipe system is used
(5) Satisfy the minimum densities and areas

Example: Storage — greeting cards in boxes in cartons on pallets
Height — 22 ft (6.7 m)
Clearance to ceiling — 6 ft (1.8 m)
Sprinklers — ordinary temperature
System type — dry

(a) Classification — Class III
(b) Selection of density/area — 0.225 gpm/ft^2 (9.2 mm/min) over 3000 ft^2 (279 m^2)
(c) Adjustment for height of storage — 1.15 × 0.225 gpm/ft^3 (9.17 mm/min) = 0.259 gpm/ft^2 (10.553 mm/min), rounded up to 0.26 gpm/ft^2 (10.6 mm/min)
(d) Adjustment of area of operation for dry system — 1.3 × 3000 ft^2 (279 m^2) = 3900 ft^2 (363 m^2)
(e) Confirmation that minimum densities and areas have been achieved

The minimum design density for a dry sprinkler system is 0.15 gpm/ft^2 over 2600 ft^2 (6.1 mm/min over 242 m^2) for Class III.

The corresponding minimum density at 3000 ft^2 (279 m^2) is 0.17 gpm/ft^2 (6.9 mm/min) (satisfied); 1.3 × 3000 ft^2 = 3900 ft^2 (363 m^2), 0.17 gpm/ft^2 over 3900 ft^2 (6.9 mm/min over 363 m^2).

The design density and area of application equals 0.26 gpm/ft^2 over 3900 ft^2 (10.6 mm/min over 363 m^2).

A.14.2.1(3) Full-scale tests show no appreciable difference in the number of sprinklers that open for either nonencapsulated or encapsulated products up to 15 ft (4.6 m) high. Test data are not available for encapsulated products stored higher than 15 ft (4.6 m). However, in rack storage tests involving encapsulated storage 20 ft (6.1 m) high, increased protection was needed over that for nonencapsulated storage.

The protection specified contemplates a maximum of 10 ft (3 m) clearances from top of storage to sprinkler deflectors for storage heights of 15 ft (4.6 m) and higher.

A.15.1.1 An evaluation for each field situation should be made to determine the worst applicable height–clearance to ceiling relationship that can be expected to appear in a particular case. Fire tests have shown that considerably greater demands occur where the clearance to ceiling is 10 ft (3.1 m) as compared to 3 ft (0.9 m) and where a pile is stable as compared to an unstable pile. Since a system is designed for a particular clearance to ceiling, the system could be inadequate when significant areas do not have piling to the design height and larger clearances to ceiling. This can also be true where the packaging or arrangement is changed so that stable piling is created where unstable piling existed. Recognition of these conditions is essential to avoid installation of protection that is inadequate or becomes inadequate because of changes.

No tests were conducted simulating a peaked roof configuration. However, it is expected that the principles of Chapter 12 still apply. The worst applicable height–clearance to ceiling relationship that can be expected to occur should be found, and protection should be designed for it. If storage is all at the same height, the worst height–clearance to ceiling relationship creating the greatest water demand would occur under the peak. If commodities are stored higher under the peak, the various height–clearance to ceiling relationships should be tried and the one creating the greatest water demand used for designing protection.

A.15.2 The densities and area of application have been developed from fire test data. Most of these tests were conducted with K-8 orifice sprinklers and 80 ft^2 or 100 ft^2 (7.4 m^2 or 9.3 m^2) sprinkler spacing. These and other tests have indicated that, with densities of 0.4 gpm/ft^2 (16.3 mm/min) and higher, better results are obtained with K-8 orifice and 70 ft^2 to 100 ft^2 (7.4 m^2 to 9.3 m^2) sprinkler spacing than where using K-5.6 orifice sprinklers at 50 ft^2 (4.6 m^2) spacing. A discharge pressure of 100 psi (6.9 bar) was used as a starting point on one of the fire tests. It was successful, but has a 1½ ft (0.5 m) clearance between the top of storage and ceiling sprinklers. A clearance to ceiling of 10 ft (3 m) could have produced a different result due to the tendency of the higher pressure to atomize the water and the greater distance that the fine water droplets had to travel to the burning fuel.

Table A.15.2 explains and provides an example of the method and procedure to follow in using this standard to determine proper protection for Group A plastics.

Table A.15.2 Metric Conversion Factors for Examples

To Convert from	to	Multiply by
feet (ft)	meters (m)	0.3048
square feet (ft^2)	square meters (m^2)	0.0929
gallons/minute (gpm)	liters/second (L/sec)	0.0631
gallons per minute per square foot (gpm/ft^2)	millimeters per minute (same as liters per minute per square meter) (mm/min)	40.746

Example 1. Storage is expanded, cartoned, stable, 15 ft (4.6 m) high in a 20 ft (6.1 m) building.

Answer 1. Column E of Table 15.2.6(a) — Design density is 0.45 gpm/ft^2 (18.3 mm/min).

Example 2. Storage is nonexpanded, unstable, 15 ft (4.6 m) high in a 20 ft (6.1 m) building.

Answer 2. Column A of Table 15.2.6(a) — Design density is listed as 0.25 gpm/ft^2 (10.2 mm/min); however, it is also possible that the storage can be 12 ft (3.66 m) in this 20 ft (6.1 m) building, which would require a design density of 0.3 gpm/ft^2 (12.2 mm/min). Unless the owner can guarantee that the storage will always be 15 ft (4.6 m), the design density = 0.3 gpm/ft^2 (12.2 mm/min).

Example 3. Storage is a nonexpanded, stable 15 ft (4.6 m) fixed-height unit load, one high, in an 18 ft (5.5 m) building.

Answer 3. Column A of Table 15.2.6(a) — Design density is 0.25 gpm/ft^2 (10.2 mm/min). Note that this design density does not increase to 0.3 gpm/ft^2 (12.2 mm/min) as in the previous example because of the use of a fixed-height unit load. The storage height will never be 12 ft (3.66 m). It will always be 15 ft (4.6 m).

Example 4. Storage is expanded, exposed, unstable, 20 ft (6.1 m) high in a 27 ft (8.2 m) building.

Answer 4. Column C of Table 15.2.6(a) — Design density is 0.7 gpm/ft^2 (28.5 mm/min). Note that other lower storage heights should also be checked, but they reveal the same, or lower, densities [0.7 gpm/ft^2 and 0.6 gpm/ft^2 (28.5 mm/min and 24.5 mm/min)], so the design density remains at 0.7 gpm/ft^2 (28.5 mm/min).

Copyright 2014 National Fire Protection Association (NFPA). Licensed, by agreement, for individual use and download on October 4, 2014 to LEADER and READER for designated user PATTARAPORN SRITRAKOOL. No other reproduction or transmission in any form permitted without written permission of NFPA. For inquires or to report unauthorized use, contact licensing@nfpa.org.

Example 5. Storage is expanded, cartoned, unstable, 17 ft (5.2 m) high in 32 ft (9.75 m) building.

Answer 5. Column D of Table 15.2.6(a) — 15 ft (4.6 m) storage in a 32 ft (9.75 m) building would be 0.55 gpm/ft^2 (22.4 mm/min); 20 ft (6.1 m) storage in a 32 ft (9.75 m) building would be 0.7 gpm/ft^2 (28.5 mm/min). Interpolation for 17 ft (5.2 m) storage is as follows:

$$0.7 - 0.55 = 0.15$$

$$\frac{0.15}{(20-15)} = 0.03$$

$$0.03 \times (17-15) = 0.06$$

$$0.55 + 0.06 = 0.61$$

Design density = 0.61 gpm/ft^2 (24.9 mm/min)

Example 6. Storage is expanded, exposed, stable, 22 ft (6.71 m) high in a 23½ ft (7.16 m) building.

Answer 6. Column B of Table 15.2.6(a) — Could interpolate between 0.6 gpm/ft^2 and 0.75 gpm/ft^2 (24.5 mm/min and 30.6 mm/min); however, this would be a moot point since the density for 15 ft (4.6 m) storage in this 23½ ft (7.16 m) building would be 0.8 gpm/ft^2 (32.6 mm/min). Unless the owner can guarantee 22 ft (6.71 m) storage, the design density is 0.8 gpm/ft^2 (32.6 mm/min). If the owner can, in a manner acceptable to the authority having jurisdiction, guarantee 22 ft (6.71 m) storage, the interpolation would yield a design density of 0.66 gpm/ft^2 (26.9 mm/min).

Example 7. Storage is nonexpanded, stable, exposed, 13½ ft (4.1 m) high in a 15 ft (4.6 m) building.

Answer 7. Column E of Table 15.2.6(a) — 12 ft (3.66 m) storage in a 15 ft (4.6 m) building would be extra hazard, Group 2 [0.4 gpm/ft^2 over 2500 ft^2 (16.3 mm/min over 230 m^2)].

Storage 15 ft (4.6 m) high in a 15 ft (4.6 m) building would be 0.45 gpm/ft^2 (18.3 mm/min). Interpolation for 13½ ft (4.1 m) storage is as follows:

$$0.45 - 0.4 = 0.05$$

$$\frac{0.05}{(15-12)} = 0.017$$

$$0.017 \times (13.5-12) = 0.026$$

$$0.4 + 0.026 = 0.426$$

Design density = 0.426 gpm/ft^2 (17.4 mm/min)

A.15.2.2 Two direct comparisons between ordinary temperature– and high temperature–rated sprinklers are possible, as follows:

(1) With nonexpanded polyethylene 1 gal (3.8 L) bottles in corrugated cartons, a 3 ft (0.9 m) clearance, and the same density, approximately the same number of sprinklers operated (nine at high temperature versus seven at ordinary temperature)
(2) With exposed, expanded polystyrene meat trays, a 9.5 ft (1.9 m) clearance, and the same density, three times as many ordinary temperature–rated sprinklers operated as did high temperature–rated sprinklers (11 at high temperature versus 33 at ordinary temperature)

The cartoned plastics requirements of this standard are based to a great extent on test work that used a specific commodity — 16 oz (0.473 L) polystyrene plastic jars individually separated by thin carton stock within a large corrugated carton [3½ ft^2 (0.32 m^2)]. *[See Figure A.15.2.2(a).]*

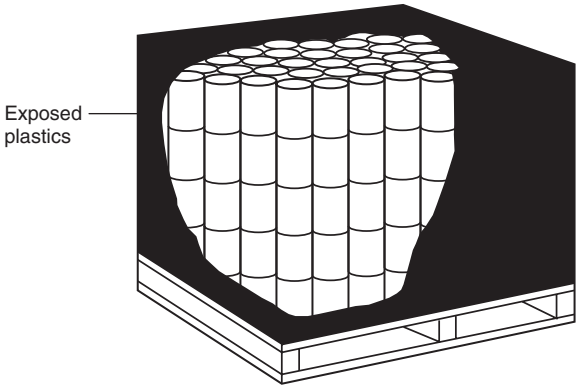

FIGURE A.15.2.2(a) Corrugated Carton Containing Individually Separated Plastic Jars.

Other Group A plastic commodities can be arranged in cartons so that they are separated by multiple thicknesses of carton material. In such arrangements, less plastic becomes involved in the fire at any one time. This could result in a less vigorous fire that can be controlled by Class IV commodity protection.

Other situations exist in which the plastics component is surrounded by several layers of less hazardous material and is therefore temporarily protected or insulated from a fire involving adjacent plastic products. Such conditions also could produce a less vigorous fire and be successfully handled by Class IV protection. *[See Figure A.15.2.2(b).]*

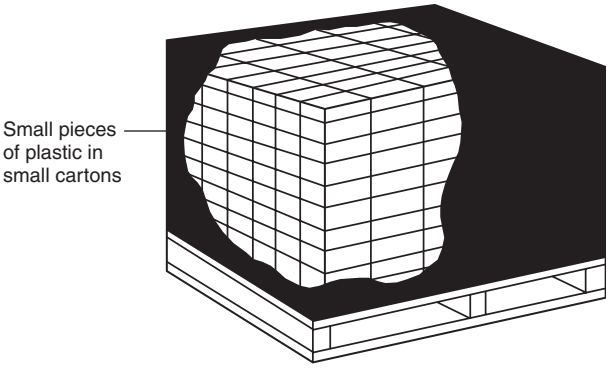

FIGURE A.15.2.2(b) Corrugated Carton Containing Plastic Pieces Individually Separated by Carton Material.

The decision to protect as a Class IV commodity, however, should be made only based on experienced judgment and only with an understanding of the consequences of underprotecting the storage segment.

A.15.2.3 There are few storage facilities in which the commodity mix or storage arrangement remains constant, and a designer should be aware that the introduction of different materials can change protection requirements considerably. Design should be based on higher densities and areas of application, and the various reductions allowed should be applied cautiously. For evaluation of existing situations, however, the allowances can be quite helpful.

A.15.2.6 Test data are not available for all combinations of commodities, storage heights, and clearances to ceiling. Some

Copyright 2014 National Fire Protection Association (NFPA). Licensed, by agreement, for individual use and download on October 4, 2014 to LEADER and READER for designated user PATTARAPORN SRITRAKOOL. No other reproduction or transmission in any form permitted without written permission of NFPA. For inquires or to report unauthorized use, contact licensing@nfpa.org.

of the protection criteria in this standard are based on extrapolations of test data for other commodities and storage configurations, as well as available loss data.

For example, there are very limited test data for storage of expanded plastics higher than 20 ft (6.1 m). The protection criteria in this standard for expanded plastics higher than 20 ft (6.1 m) are extrapolated from test data for expanded plastics storage 20 ft (6.1 m) and less in height and test data for unexpanded plastics above 20 ft (6.1 m).

Further examples can be found in the protection criteria for clearance to ceiling up to 15 ft (4.6 m). Test data are limited for clearance to ceiling greater than 10 ft (3.1 m). It should be assumed that, if protection is adequate for a given storage height in a building of a given height, the same protection will protect storage of any lesser height in the same building. For example, protection adequate for 20 ft (6.1 m) storage in a 30 ft (9.1 m) building [10 ft (3.1 m) clearance to ceiling] would also protect 15 ft (4.6 m) storage in a 30 ft (9.1 m) building [15 ft (4.6 m) clearance to ceiling]. Therefore, the protection criteria in Table 15.2.6(a) for 15 ft (4.6 m) clearance to ceiling are based on the protection criteria for storage 5 ft (1.5 m) higher than the indicated height with 10 ft (3.1 m) clearance to ceiling.

Table 15.2.6(a) is based on tests that were conducted primarily with high temperature–rated, K-8 orifice sprinklers. Other tests have demonstrated that, where sprinklers are used with orifices greater than K-8, ordinary-temperature sprinklers are acceptable.

A.15.2.9 The "up to" in Table 15.2.6(a) and Table 15.2.6(b) is intended to aid in the interpolation of densities between storage heights.

A.16.1.2 The fire protection system design should consider the maximum storage height. For new sprinkler installations, maximum storage height is the usable height at which commodities can be stored above the floor while the minimum required unobstructed space below sprinklers is maintained. Where evaluating existing situations, maximum storage height is the maximum existing storage height if space between the sprinklers and storage is equal to or greater than that required.

A.16.1.2.2 Information for the protection of Classes I, II, III, and IV commodities was extrapolated from full-scale fire tests that were performed at different times than the tests that were used to develop the protection for plastic commodities. It is possible that, by selecting certain points from the tables (and after applying the appropriate modifications), the protection specified by 16.2.1.4.1 exceeds the requirements of Section 17.2. In such situations, the protection specified for plastics, although less than that required by the tables, can adequately protect Class I, II, III, and IV commodities.

This section also allows storage areas that are designed to protect plastics to store Class I, II, III, and IV commodities without a re-evaluation of fire protection systems.

A.16.1.9 Barriers should be of sufficient strength to avoid sagging that interferes with loading and unloading operations.

A.16.2.1.3.1 Bulkheads are not a substitute for sprinklers in racks. Their installation does not justify reduction in sprinkler densities or design operating areas as specified in the design curves.

A.16.2.1.3.2 Data indicate that the sprinkler protection criteria in Figure 16.2.1.3.2(a) through Figure 16.2.1.3.2(g) are ineffective, by themselves, for rack storage with solid shelves, if the required flue spaces are not maintained. Use of Figure 16.2.1.3.2(a) through Figure 16.2.1.3.2(g), along with the additional provisions that are required by this standard, can provide acceptable protection.

A.16.2.1.3.2.1 The aisle width and the depth of racks are determined by material-handling methods. The widths of aisles should be considered in the design of the protection system. Storage in aisles can render protection ineffective and should be discouraged.

A.16.2.1.4.2.1 Spacing of sprinklers on branch lines in racks in the various tests demonstrates that maximum spacing as specified is proper.

A.16.2.1.4.2.2 In-rack sprinklers at one level only for storage up to and including 25 ft (7.6 m) in multiple-row racks should be located at the tier level nearest one-half to two-thirds of the storage height.

A.16.2.1.4.2.3 In-rack sprinklers have proven to be the most effective way to fight fires in rack storage. To accomplish this, however, in-rack sprinklers must be located where they will operate early in a fire as well as direct water where it will do the most good. Simply maintaining a minimum horizontal spacing between sprinklers does not achieve this goal. This is because fires in rack storage develop and grow in transverse and longitudinal flues, and in-rack sprinklers do not operate until flames actually impinge on them. To assure early operation and effective discharge, in-rack sprinklers in the longitudinal flue of open-frame racks must be located at transverse flue intersections.

A.16.2.1.4.2.4 Where possible, it is recommended that in-rack sprinkler deflectors be located at least 6 in. (152 mm) above pallet loads.

A.16.2.1.4.2.5 Where possible, it is recommended that in-rack sprinklers be located away from rack uprights.

A.16.2.2.7.3 See A.16.2.1.4.2.3.

A.16.2.3 ESFR sprinklers are designed to respond quickly to growing fires and deliver heavy discharge to suppress fires rather than to control them. ESFR sprinklers should not be relied on to provide suppression if they are used outside the design parameters.

While these sprinklers are intended primarily for use in high-piled storage situations, this section permits their use and extension into adjacent portions of an occupancy that might have a lesser classification.

Storage in single-story or multistory buildings can be permitted, provided the maximum ceiling/roof height as specified in Chapter 12 is satisfied for each storage area.

Design parameters were determined from a series of full-scale fire tests that were conducted as a joint effort between Factory Mutual Research Corporation and the National Fire Protection Research Foundation. (Copies of the test reports are available from the NFPRF.)

A.16.2.3.6.5 See A.16.2.1.4.2.3.

A.16.2.4.1.1 Slatting of decks or walkways or the use of open grating as a substitute for automatic sprinkler thereunder is not acceptable.

In addition, where shelving of any type is employed, it is for the basic purpose of providing an intermediate support between the structural members of the rack. As a result, it-

Copyright 2014 National Fire Protection Association (NFPA). Licensed, by agreement, for individual use and download on October 4, 2014 to LEADER and READER for designated user PATTARAPORN SRITRAKOOL. No other reproduction or transmission in any form permitted without written permission of NFPA. For inquires or to report unauthorized use, contact licensing@nfpa.org.

becomes almost impossible to define and maintain transverse flue spaces across the rack as required.

A.16.3.1.1 Water demand for storage height over 25 ft (7.6 m) on racks without solid shelves separated by aisles at least 4 ft (1.2 m) wide and with more than 10 ft (3.1 m) between the top of storage and the sprinklers should be based on sprinklers in a 2000 ft^2 (186 m^2) operating area for double-row racks and a 3000 ft^2 (278.7 m^2) operating area for multiple-row racks discharging a minimum of 0.18 gpm/ft^2 (7.33 mm/min) for Class I commodities, 0.21 gpm/ft^2 (8.56 mm/min) for Class II and Class III commodities, and 0.25 gpm/ft^2 (10.2 mm/min) for Class IV commodities for ordinary temperature–rated sprinklers or a minimum of 0.25 gpm/ft^2 (10.2 mm/min) for Class I commodities, 0.28 gpm/ft^2 (11.41 mm/min) for Class II and Class III commodities, and 0.32 gpm/ft^2 (13.04 mm/min) for Class IV commodities for high temperature–rated sprinklers. (*See A.16.3.1.3.1.3.*)

Where such storage is encapsulated, ceiling sprinkler density should be 25 percent greater than for nonencapsulated storage.

Data indicate that the sprinkler protection criteria in 16.3.1.1 are ineffective, by themselves, for rack storage with solid shelves if the required flue spaces are not maintained. Use of 16.3.1.1, along with the additional provisions that are required by this standard, can provide acceptable protection.

A.16.3.1.3.1.1 Where storage tiers are not the same size on each side of the longitudinal flue, one side of the flue should be protected with sprinklers at the proper elevation above the load. The next level of sprinklers should protect the other side of the flue with the sprinklers at the proper elevation above that load as indicated in Figure A.16.3.1.3.1.1. The vertical spacing requirements for in-rack sprinklers specified in Table 16.3.1.1 and Section 17.2 for plastics should be followed.

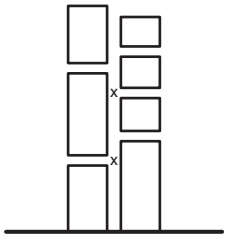

FIGURE A.16.3.1.3.1.1 Placement of In-Rack Sprinklers Where Rack Levels Have Varying Heights.

A.16.3.1.3.1.2 In single-row racks with more than 10 ft (3.1 m) between the top of storage and the ceiling, a horizontal barrier should be installed above storage with one line of sprinklers under the barrier.

A.16.3.1.3.1.3 In multiple-row racks with more than 10 ft (3.1 m) between the maximum height of storage and ceiling, a horizontal barrier should be installed above storage with a level of sprinklers, spaced as stipulated for in-rack sprinklers, installed directly beneath the barrier. In-rack sprinklers should be installed as indicated in Figure 16.3.1.3.1.3(A)(a) through Figure 16.3.1.3.1.3(A)(c).

Data indicate that the sprinkler protection criteria in 16.3.1.3.1.3 are ineffective, by themselves, for rack storage with solid shelves if the required flue spaces are not maintained. Use of Table 16.3.1.2, along with the additional provisions that are required by this standard, can provide acceptable protection.

A.16.3.1.3.2.4 In-rack sprinklers have proven to be the most effective way to fight fires in rack storage. To accomplish this, however, in-rack sprinklers must be located where they will operate early in a fire as well as direct water where it will do the most good. Simply maintaining a minimum horizontal spacing between sprinklers does not achieve this goal. This is because fires in rack storage develop and grow in transverse and longitudinal flues, and in-rack sprinklers do not operate until flames actually impinge on them. To assure early operation and effective discharge, in-rack sprinklers in the longitudinal flue of open-frame racks must be located at transverse flue intersections.

A.16.3.3 ESFR sprinklers are designed to respond quickly to growing fires and deliver heavy discharge to suppress fires rather than to control them. ESFR sprinklers should not be relied on to provide suppression if they are used outside the design parameters.

While these sprinklers are intended primarily for use in high-piled storage situations, this section permits their use and extension into adjacent portions of an occupancy that might have a lesser classification.

Storage in single-story or multistory buildings can be permitted, provided the maximum ceiling/roof height as specified in Chapter 12 is satisfied for each storage area.

Design parameters were determined from a series of full-scale fire tests that were conducted as a joint effort between Factory Mutual Research Corporation and the National Fire Protection Research Foundation. (Copies of the test reports are available from the NFPRF.)

A.17.1.2.1 All arrangements of exposed plastics cannot be protected with all types of sprinklers. Only certain combinations of ceiling sprinklers and in-rack sprinklers have been found to provide acceptable protection. No full-scale fire testing has been performed that has determined acceptable criteria for exposed expanded plastics. Factory Mutual has published criteria in its data sheets to protect exposed expanded plastics based on a risk analysis and small/intermediate-scale test data. Some authorities having jurisdiction accept that criteria as an alternative to the intent of NFPA 13.

A.17.1.2.7 Information for the protection of Class I, II, III, and IV commodities was extrapolated from full-scale fire tests that were performed at different times than the tests that were used to develop the protection for plastic commodities. It is possible that, by selecting certain points from the tables (and after applying the appropriate modifications), the protection specified by 16.2.1.4.1 exceeds the requirements of Section 17.2. In such situations, the protection specified for plastics, although less than that required by the tables, can adequately protect Class I, II, III, and IV commodities.

This section also allows storage areas that are designed to protect plastics to store Class I, II, III, and IV commodities without a re-evaluation of fire protection systems.

A.17.1.7.4 In-rack sprinklers have proven to be the most effective way to fight fires in rack storage. To accomplish this, however, in-rack sprinklers must be located where they will operate early in a fire as well as direct water where it will do the most good. Simply maintaining a minimum horizontal spac-

Copyright 2014 National Fire Protection Association (NFPA). Licensed, by agreement, for individual use and download on October 4, 2014 to LEADER and READER for designated user PATTARAPORN SRITRAKOOL. No other reproduction or transmission in any form permitted without written permission of NFPA. For inquires or to report unauthorized use, contact licensing@nfpa.org.

ing between sprinklers does not achieve this goal, because fires in rack storage develop and grow in transverse and longitudinal flues, and in-rack sprinklers do not operate until flames actually impinge on them. To ensure early operation and effective discharge, in-rack sprinklers in the longitudinal flue of open-frame racks must be located at transverse flue intersections.

A.17.1.8 Barriers should be of sufficient strength to avoid sagging that interferes with loading and unloading operations.

A.17.2.1.1 All rack fire tests of plastics were run with an approximate 10 ft (3.1 m) maximum clearance to ceiling.

A.17.2.1.2.4 In most of Figure 17.2.1.2.1(a) through Figure 17.2.1.2.1(f), the designer is presented with multiple options from which to choose. The single column of boxes in the elevation view represents single-row rack storage. The double column of boxes in the elevation view represents double-row rack storage, and the options with three or four columns of boxes represent different arrangements of multiple-row rack storage. The "o" and "x" characters in the elevation and plan views represent different rows of in-rack sprinklers. The "o" and "x" characters in the elevation view show the vertical spacing of in-rack sprinklers while the characters in the plan view show the horizontal spacing of in-rack sprinklers. Different symbols are used so that the upper and lower levels of in-rack sprinklers can be determined when looking at the plan view. If no "o" or "x" appears in the elevation and plan views for an option, it means that the storage can be protected without in-rack sprinklers.

A.17.2.1.4 Each of the figures in 17.2.1.4 shows a variety of different potential rack arrangements. The first single-row rack (SRR) to the left in each figure shows a rack against a wall. The second SRR shows a single-row rack with aisles on each side. The double-row rack (DRR) is in the center of the figure. The first multiple-row rack (MRR) shows the in-rack sprinkler position for racks up to 15 ft (4.6 m) long in the dimension parallel to the transverse flue. The second MRR shows longer rack structures where the in-rack sprinkler pattern would repeat.

A.17.2.1.5.3 See A.17.1.7.4.

A.17.2.2.6.3 See A.17.1.7.4.

A.17.2.3 ESFR sprinklers are designed to respond quickly to growing fires and deliver heavy discharge to suppress fires rather than to control them. ESFR sprinklers should not be relied on to provide suppression if they are used outside the design parameters.

While these sprinklers are intended primarily for use in high-piled storage situations, this section permits their use and extension into adjacent portions of an occupancy that might have a lesser classification.

Storage in single-story or multistory buildings can be permitted, provided the maximum ceiling/roof height as specified in Chapter 12 is satisfied for each storage area.

Design parameters were determined from a series of full-scale fire tests that were conducted as a joint effort between Factory Mutual Research Corporation and the National Fire Protection Research Foundation. (Copies of the test reports are available from the NFPRF.)

A.17.2.3.4.5 See A.17.1.7.4.

A.17.2.4.1.1 Slatting of decks or walkways or the use of open grating as a substitute for automatic sprinkler thereunder is not acceptable.

In addition, where shelving of any type is employed, it is for the basic purpose of providing an intermediate support between the structural members of the rack. As a result, it becomes almost impossible to define and maintain transverse flue spaces across the rack as required.

A.17.3.1.3 In this application ordinary-, intermediate-, or high-temperature sprinklers can be used. There are no data to support temperature rating restrictions for this section.

A.17.3.1.8 *Figure 17.3.1.8(a)* — The protection area per sprinkler under barriers should be no greater than 80 ft^2 (7.44 m^2).

Figure 17.3.1.8(b) — The protection area per sprinkler under barriers should be no greater than 80 ft^2 (7.44 m^2).

Figure 17.3.1.8(c) — The protection area per sprinkler under barriers should be no greater than 50 ft^2 (4.65 m^2).

Figure 17.3.1.8(d) — The protection area per sprinkler under barriers should be no greater than 50 ft^2 (4.65 m^2).

Figure 17.3.1.8(e) — The protection area per sprinkler under barriers should be no greater than 50 ft^2 (4.65 m^2).

Figure 17.3.1.8(f) — The protection area per sprinkler under barriers should be no greater than 50 ft^2 (4.65 m^2).

A.17.3.1.10 See A.17.1.7.4.

A.17.3.2.5 There are currently no situations where in-rack sprinklers are required to be used to protect Group A plastics where CMSA sprinklers are used at the ceiling. At such time as additional protection schemes are developed that rely on in-rack sprinklers working in conjunction with CMSA sprinklers at the ceiling, requirements for the in-rack sprinkler location and discharge will be included here.

A.17.3.3 ESFR sprinklers are designed to respond quickly to growing fires and deliver heavy discharge to suppress fires rather than to control them. ESFR sprinklers should not be relied on to provide suppression if they are used outside the design parameters.

While these sprinklers are intended primarily for use in high-piled storage situations, this section permits their use and extension into adjacent portions of an occupancy that might have a lesser classification.

Storage in single-story or multistory buildings can be permitted, provided the maximum ceiling/roof height as specified in Chapter 12 is satisfied for each storage area.

Design parameters were determined from a series of full-scale fire tests that were conducted as a joint effort between Factory Mutual Research Corporation and the National Fire Protection Research Foundation. (Copies of the test reports are available from the NFPRF.)

A.17.3.3.4.5 See A.17.1.7.4.

A.18.4 The protection criteria in Table 18.4(a) through Table 18.4(d) have been developed from fire test data. Protection requirements for other storage methods are beyond the scope of this standard at the present time. From fire testing with densities of 0.45 gpm/ft^2 (18.3 mm/min) and higher, there have been indications that large orifice sprinklers at greater than 50 ft^2 (4.6 m^2) spacing produce better results than the ½ in. (12.7 mm) orifice sprinklers at 50 ft^2 (4.6 m^2) spacing.

Table 18.4(a) and Table 18.4(c) are based on operation of standard sprinklers. Use of quick-response or other special sprinklers should be based on appropriate tests as approved by the authority having jurisdiction.

Copyright 2014 National Fire Protection Association (NFPA). Licensed, by agreement, for individual use and download on October 4, 2014 to LEADER and READER for designated user PATTARAPORN SRITRAKOOL. No other reproduction or transmission in any form permitted without written permission of NFPA. For inquires or to report unauthorized use, contact licensing@nfpa.org.

The current changes to Table 18.4(a) through Table 18.4(d) represent test results from rubber tire fire tests performed at the Factory Mutual Research Center.

Storage heights and configurations, or both [e.g., automated material-handling systems above 30 ft (9.1 m)], beyond those indicated in the table have not had sufficient test data developed to establish recommended criteria. Detailed engineering reviews of the protection should be conducted and approved by the authority having jurisdiction.

A.19.1 This section provides a summary of the data developed from the tissue test series of full-scale roll paper tests conducted at the Factory Mutual Research Center in West Glocester, RI.

The test building is approximately 200 ft × 250 ft [50,000 ft^2 (4.65 km^2)] in area, of fire-resistive construction, and has a volume of approximately 2.25 million ft^3 (63,720 m^3), the equivalent of a 100,000 ft^2 (9.29 km^2) building 22.5 ft (6.86 m) high. The test building has two primary heights beneath a single large ceiling. The east section is 30 ft (9.1 m) high and the west section is 60 ft (18.29 m) high.

The tissue test series was conducted in the 30 ft (9.1 m) section, with a clearance to the ceiling of nominally 10 ft (3.1 m).

Figure A.19.1 illustrates a typical storage array used in the tissue series of tests.

The basic criteria used in judging test failure included one or more of the following:

(1) Firespread to the north end of the storage array
(2) Gas temperatures near the ceiling maintained at high levels for a time judged to be sufficient to endanger exposed structural steel
(3) Fire reaching the target stacks

Table A.19.1 outlines the tissue test results.

Fire tests have been conducted on 20 ft (6.1 m) and 25 ft (7.6 m) high vertical storage of tissue with 10 ft (3.1 m) and 5 ft (1.5 m) clear space to the ceiling in piles extending up to seven columns in one direction and six columns in the other direction. In these tests, target columns of tissue were located directly across an 8 ft (2.4 m) aisle from the main pile. Three tests were conducted using K-8.0 286°F (141°C) high-temperature sprinklers on a 100 ft^2 (9.3 m^2) spacing and at constant pressures of 14 psi, 60 psi, and 95 psi (1 bar, 4.1 bar, and 6.6 bar), respectively. One test was run using 0.64 in. (16.3 mm) 286°F (141°C) high-temperature sprinklers on a 100 ft^2 (9.3 m^2) spacing at a constant pressure of 50 psi (3.5 bar). Two tests were conducted following a scheduled decay from an initial pressure of 138 psi (9.5 bar) to a design point of 59 psi (4.1 bar) if 40 sprinklers opened. The significant characteristic of these fire tests was the rapid initial firespread across the surface of the rolls. Ceiling temperatures were controlled during the decaying pressure tests and during the higher constant pressure tests. With the exception of the 20 ft (6.1 m) high decaying pressure test, the extent of firespread within the pile could not be clearly established. Aisle jump was experienced, except at the 95 psi (6.6 bar) constant pressure, 20 ft (6.1 m) high decaying pressure, and large drop test. Water absorption and pile instability caused pile collapse in all tests. This characteristic should be considered where manually attacking a fire in tissue storage occupancies.

Available fire experience in roll tissue storage occupancies does not correlate well with the constant pressure full-scale fire tests with respect to the number of sprinklers operating and the extent of firespread. Better correlation is noted with the decaying pressure tests. Thirteen fires reported in storage occupancies with storage piles ranging from 10 ft to 20 ft (3.1 m to 6.1 m) high and protected by wet pipe sprinkler systems ranging from ordinary hazard design densities to design densities of 0.6 gpm/ft^2 (24.5 mm/min) were controlled with an average of 17 sprinklers. The maximum number of wet pipe sprinklers that opened was 45, and the minimum number was 5, versus 88 and 26, respectively, in the constant pressure tests. Seventeen sprinklers opened in the 20 ft (6.1 m) high decaying pressure test. One actual fire in tissue storage provided with a dry pipe system opened 143 sprinklers but was reported as controlled.

One fire test was conducted with plastic-wrapped rolls of heavyweight kraft paper. The on-end storage was in a standard configuration, 20 ft (6.1 m) high with 9½ ft (2.9 m) clearance to ceiling sprinklers. The prescribed 0.3 gpm/ft^2 (12.2 mm/min) density controlled the firespread, but protection to roof steel was marginal to the point where light beams and joists might be expected to distort. A lower moisture content in the paper as a result of the protective plastic wrapping was considered to be the reason for the higher temperatures in this test as compared to a similar test where the rolls were not wrapped.

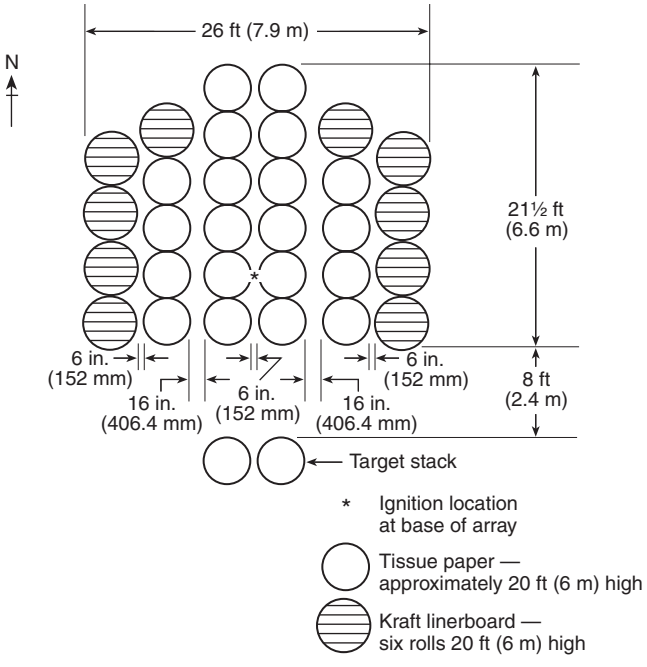

FIGURE A.19.1 Plan View of Typical Tissue Storage Array.

A.19.1.2 *Existing Systems.* Sprinkler systems protecting existing roll paper storage facilities should be evaluated in accordance with Table A.19.1.2(a) and Table A.19.1.2(b). While fire can be controlled by the protection shown in Table A.19.1.2(a) and Table A.19.1.2(b), greater damage can occur when the densities in Table A.19.1.2(a) and Table A.19.1.2(b) are used rather than those specified in Table 19.1.2.1.3(a) and Table 19.1.2.1.3(b).

A.19.1.2.1.4 Generally, more sprinklers open in fires involving roll paper storage protected by sprinklers rated below the high-temperature range. An increase of 67 percent in the design area should be considered.

Copyright 2014 National Fire Protection Association (NFPA). Licensed, by agreement, for individual use and download on October 4, 2014 to LEADER and READER for designated user PATTARAPORN SRITRAKOOL. No other reproduction or transmission in any form permitted without written permission of NFPA. For inquires or to report unauthorized use, contact licensing@nfpa.org.

Table A.19.1 Summary of Roll Paper Tissue Tests

Test Specifications	Test Number					
	B1[a]	B2	B3	B4	B5[b]	B6[b]
Test date	10/4/79	7/23/80	7/30/80	10/15/80	7/28/82	8/5/82
Paper type	Tissue	Tissue	Tissue	Tissue	Tissue	Tissue
Stack height [ft–in. (m)]	21–10 (6.66)	20–0 (6.1)	21–8 (21.60)	18–6 (6.64)	19–10 (6.05)	25–3 (7.69)
Paper, banded	No	No	No	No	No	No
Paper, wrapped	No	No	No	No	No	No
Fuel array	Standard	Standard	Standard	Standard	Standard	Standard
Clearance to ceiling [ft–in. (m)]	8–2 (2.49)	10–0 (3.05)	8–4 (2.54)	11–6 (3.51)	5–2 (1.58)	4–9 (1.45)
Clearance to sprinklers [ft–in. (m)]	7–7 (2.31)	9–5 (2.87)	7–9 (2.36)	10–9 (3.28)	4–7 (1.40)	4–2 (1.27)
Sprinkler orifice [in. (mm)]	17/32 (13.5)	17/32 (13.5)	17/32 (13.5)	0.64 (16.33)	17/32 (13.5)	17/32 (13.5)
Sprinkler temperature rating [F° (°C)]	280 (138)	280 (138)	280 (138)	280 (138)	280 (138)	280 (138)
Sprinkler spacing [ft × ft (m × m)]	10 × 10 (3.05 × 3.05)	10 × 10 (3.05 × 3.05)	10 × 10 (3.05 × 3.05)	10 × 10 (3.05 × 3.05)	10 × 10 (3.05 × 3.05)	10 × 10 (3.05 × 3.05)
Water pressure [psi (bar)]	14 (0.9)[c]	60 (4.1)	95 (6.6)	50 (3.4)	138 (9.5) initial 102 (7.0) final	138 (9.5) initial 88 (6.1) final
Moisture content of paper (%)	9.3	9.3	10.2	6.0	8.2	9.2
First sprinkler operation (min:sec)	0:43	0:32	0:38	0:31	0:28	0:22
Total sprinklers open	88	33	26	64	17	29
Final flow [gpm (L/min)]	2575 (9746)[c]	1992 (7540)	1993 (7544)	4907 (18,573)	1363 (5159)	2156 (8161)
Sprinkler demand area [ft^2 (m^2)]	8800 (817.5)	3300 (306.6)	2600 (241.5)	6400 (595)	1700 (158)	2900 (269)
Average discharge density [gpm/ft^2 (mm/min)]	0.29 (11.8)[c]	0.60 (24.4)	0.77 (31.4)	—	0.92 (37.5) initial 0.80 (32.6) final	0.96 (39.1) initial 0.74 (30.2) final
Maximum 1-minute average gas temperature over ignition [°F (°C)]	1680 (916)[c]	1463 (795)	1634 (890)	1519 (826)	[d]	[e]
Duration of high temperature within acceptable limits	No	Yes	Yes	Marginal	Yes	Yes
Maximum 1-minute average fire plume gas velocity over ignition [ft/sec (m/sec)]	—	40.7 (12.4)	50.2 (15.3)	47.8 (14.6)	—	—
Target ignited	Yes	Yes	No	No	No	Briefly
Extent of fire damage within acceptable limits	No	No	Marginal	Marginal	Yes	Marginal
Test duration (min)	17.4	20	20	25.5	45	45

[a] Phase I test.
[b] Phase III tests decaying pressure.
[c] Pressure increased to 50 psi (3.5 bar) at 10 minutes.
[d] Maximum steel temperature over ignition 341°F (172°C).
[e] Maximum steel temperature over ignition 132°F (56°C).

Copyright 2014 National Fire Protection Association (NFPA). Licensed, by agreement, for individual use and download on October 4, 2014 to LEADER and READER for designated user PATTARAPORN SRITRAKOOL. No other reproduction or transmission in any form permitted without written permission of NFPA. For inquires or to report unauthorized use, contact licensing@nfpa.org.

Table A.19.1.2(a) Automatic Sprinkler System Design Criteria — Spray Sprinklers for Existing Storage Facilities (Discharge densities are gpm/ft^2 over ft^2.)

Storage Height (ft)	Ceiling (ft)	Heavyweight					Mediumweight			
		Closed Array Banded or Unbanded	Standard Array		Open Array		Closed Array Banded or Unbanded	Standard Array		Open Array Banded or Unbanded
			Banded	Unbanded	Banded	Unbanded		Banded	Unbanded	
10	≤5	0.2/2000	0.2/2000	0.2/2000	0.25/2000	0.25/2000	0.2/2000	0.25/2000	0.3/2000	0.3/2000
10	>5	0.2/2000	0.2/2000	0.2/2000	0.25/2500	0.25/2500	0.2/2000	0.25/2000	0.3/2000	0.3/2000
15	≤5	0.25/2000	0.25/2000	0.25/2500	0.3/2500	0.3/3000	0.25/2000	0.3/2000	0.45/2500	0.45/2500
15	>5	0.25/2000	0.25/2000	0.25/2500	0.3/3000	0.3/3500	0.25/2000	0.3/2500	0.45/3000	0.45/3000
20	≤5	0.3/2000	0.3/2000	0.3/2500	0.45/3000	0.45/3500	0.3/2000	0.45/2500	0.6/2500	0.6/2500
20	>5	0.3/2000	0.3/2500	0.3/3000	0.45/3500	0.45/4000	0.3/2500	0.45/3000	0.6/3000	0.6/3000
25	≤5	0.45/2500	0.45/3000	0.45/3500	0.6/2500	0.6/3000	0.45/3000	0.6/3000	0.75/2500	0.75/2500
25	>5	0.45/3000	0.45/3500	0.45/4000	0.6/3000	0.6/3500	0.45/3500	0.6/3500	0.75/3000	0.75/3000
30	≤5	0.6/2500	0.6/3000	0.6/3000	0.75/2500	0.75/3000	0.6/4000	0.75/3000	0.75/3500	0.75/3500

Note: Densities or areas, or both, can be interpolated between any 5 ft storage height increment.

Table A.19.1.2(b) Automatic Sprinkler System Design Criteria — Spray Sprinklers for Existing Storage Facilities (Discharge densities are mm/min over m^2.)

Storage Height (m)	Ceiling (m)	Heavyweight					Mediumweight			
		Closed Array Banded or Unbanded	Standard Array		Open Array		Closed Array Banded or Unbanded	Standard Array		Open Array Banded or Unbanded
			Banded	Unbanded	Banded	Unbanded		Banded	Unbanded	
3.1	≤1.5	0.76/185.8	0.76/185.8	0.76/185.8	0.95/185.8	0.95/185.8	0.76/185.8	0.95/185.8	12.2/185.8	12.2/185.8
3.1	>1.5	0.76/185.8	0.76/185.8	0.76/185.8	0.95/232.3	0.95/232.3	0.76/185.8	0.95/185.8	12.2/185.8	12.2/185.8
4.6	≤1.5	0.95/185.8	0.95/185.8	0.95/232.3	12.2/232.3	12.2/278.7	0.95/185.8	12.2/185.8	18.3/232.3	18.3/232.3
4.6	>1.5	0.95/185.8	0.95/185.8	0.95/232.3	12.2/278.7	12.2/325.2	0.95/185.8	12.2/232.3	18.3/278.7	18.3/278.7
6.1	≤1.5	12.2/185.8	12.2/185.8	12.2/232.3	18.3/278.7	18.3/325.2	12.2/185.8	18.3/232.3	24.5/232.3	24.5/232.3
6.1	>1.5	12.2/185.8	12.2/232.3	12.2/278.7	18.3/325.2	18.3/371.6	12.2/232.3	18.3/278.7	24.5/278.7	24.5/278.7
7.6	≤1.5	18.3/232.3	18.3/278.7	18.3/325.2	24.5/232.3	24.5/278.7	18.3/278.7	24.5/278.7	30.6/232.3	30.6/232.3
7.6	>1.5	18.3/278.7	18.3/325.2	18.3/371.6	24.5/278.7	24.5/325.2	18.3/325.2	24.5/325.2	30.6/278.7	30.6/278.7
9.1	≤1.5	24.5/232.3	24.5/278.7	24.5/278.7	30.6/232.3	30.6/278.7	24.5/371.6	30.6/278.7	30.6/325.2	30.6/325.2

Note: Densities or areas, or both, can be interpolated between any 1.5 m storage height increment.

A.20.2 Exposed, expanded plastic dunnage, instrument panels, and plastic bumper facia were the automotive components with their related packaging that were utilized in the fire tests. This test commodity used in the large-scale sprinklered fire test proved to be the worst challenge per the large-scale calorimeter tests of available components. See *Technical Report of Fire Testing of Automotive Parts in Portable Storage Racking*, prepared by Underwriters Laboratories, Project 99NK29106, NC4004, January 5, 2001, and *Commodity Hazard Comparison of Expanded Plastic in Portable Bins and Racking*, Project 99NK29106, NC4004, September 8, 2000.

A.20.3 These special designs are based on fire heat release calorimeter tests and 11 full-scale tests conducted by the Retail Fire Research Coalition at Underwriters Laboratories in 2000 and 2007. *[See Figure A.20.3(a) through Figure A.20.3(f).]*

Copyright 2014 National Fire Protection Association (NFPA). Licensed, by agreement, for individual use and download on October 4, 2014 to LEADER and READER for designated user PATTARAPORN SRITRAKOOL. No other reproduction or transmission in any form permitted without written permission of NFPA. For inquires or to report unauthorized use, contact licensing@nfpa.org.

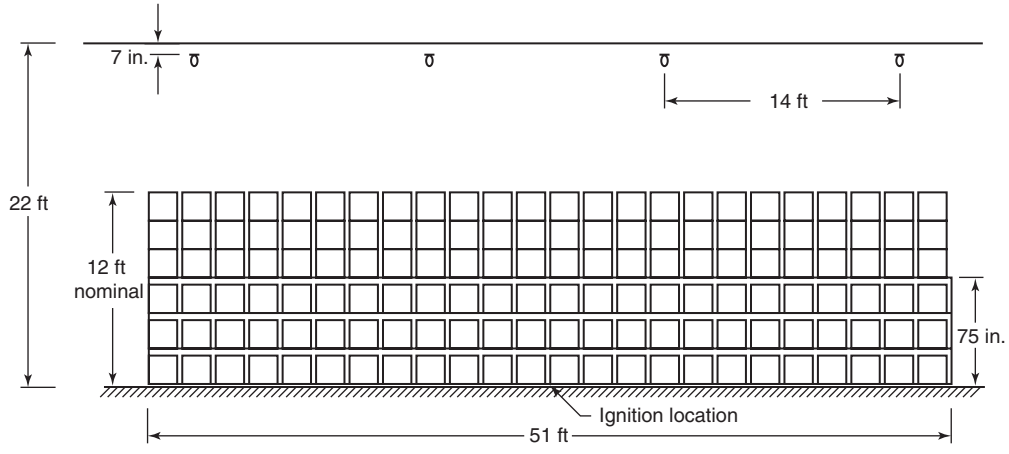

Legend:

Ω K-25.2 165°F upright-style sprinkler

Group A plastic test commodity

Side Elevation View of Main Array

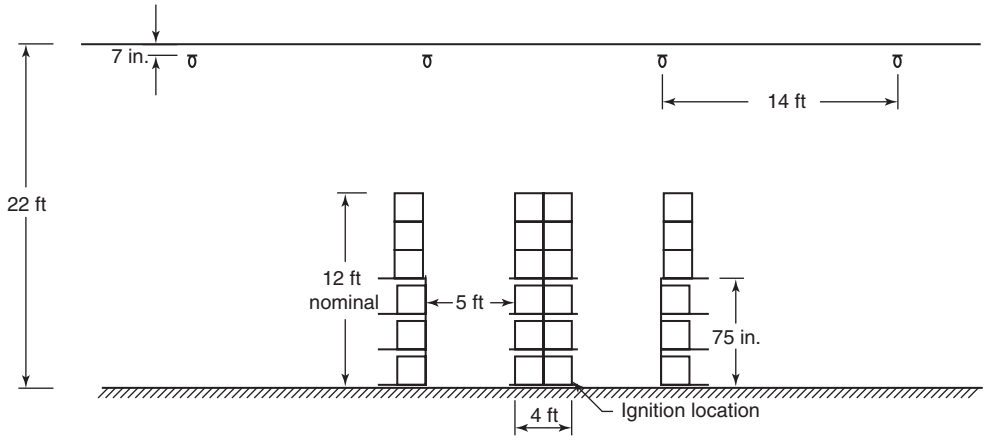

Legend:

Ω K-25.2 165°F upright-style sprinkler

Group A plastic test commodity

Front Elevation View

FIGURE A.20.3(a) Fire Test A1.

Copyright 2014 National Fire Protection Association (NFPA). Licensed, by agreement, for individual use and download on October 4, 2014 to LEADER and READER for designated user PATTARAPORN SRITRAKOOL. No other reproduction or transmission in any form permitted without written permission of NFPA. For inquires or to report unauthorized use, contact licensing@nfpa.org.

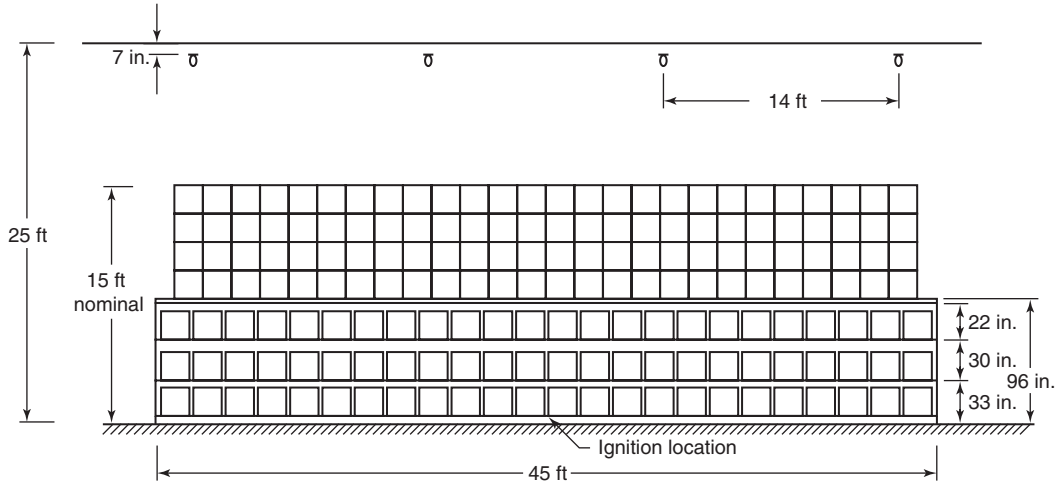

Legend:

Ω K-25.2 165°F upright-style sprinkler

Group A plastic test commodity

Side Elevation View of Main Array

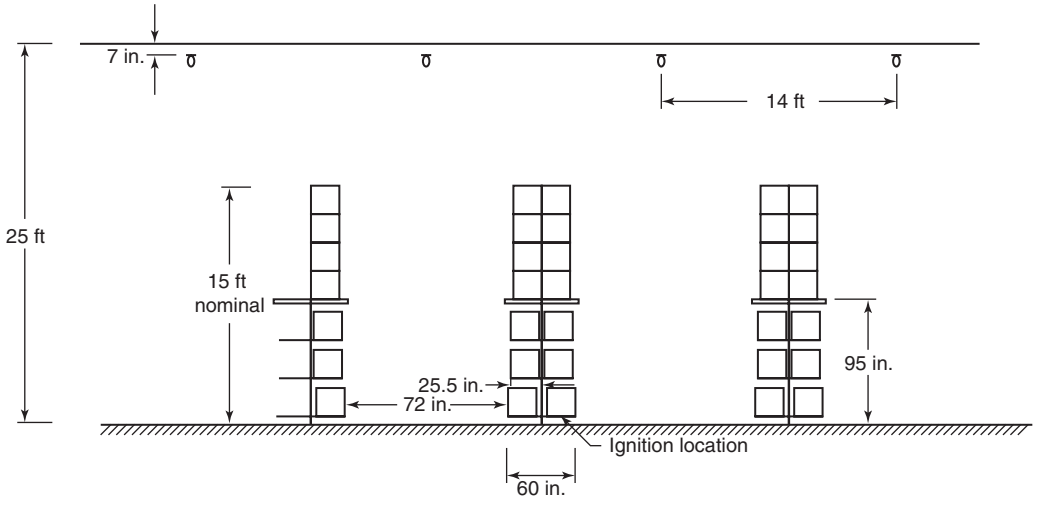

Legend:

Ω K-25.2 165°F upright-style sprinkler

Group A plastic test commodity

Front Elevation View

FIGURE A.20.3(b) Fire Test A2.

Copyright 2014 National Fire Protection Association (NFPA). Licensed, by agreement, for individual use and download on October 4, 2014 to LEADER and READER for designated user PATTARAPORN SRITRAKOOL. No other reproduction or transmission in any form permitted without written permission of NFPA. For inquires or to report unauthorized use, contact licensing@nfpa.org.

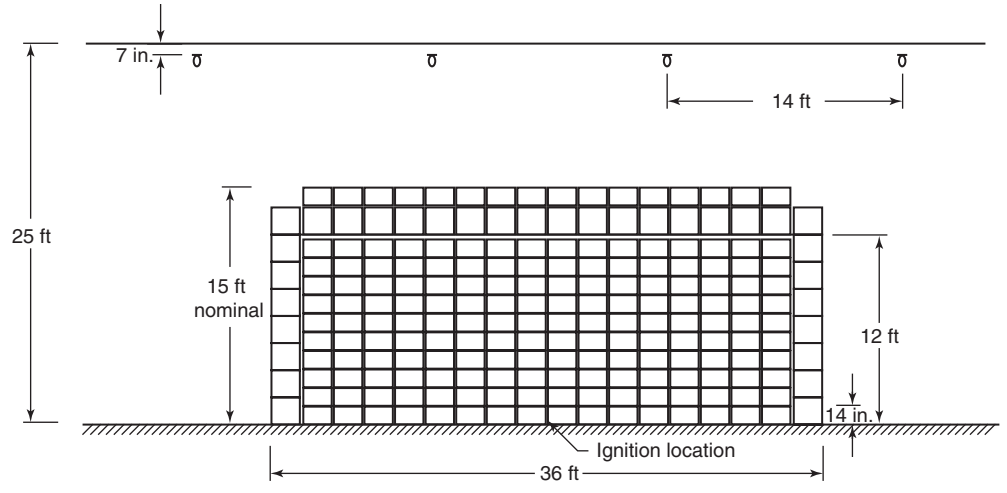

Legend:

- K-25.2 165°F upright-style sprinkler
- Group A plastic test commodity nominal 12.25 in. tall
- Group A plastic test commodity nominal 21 in. tall

Side Elevation View of Main Array

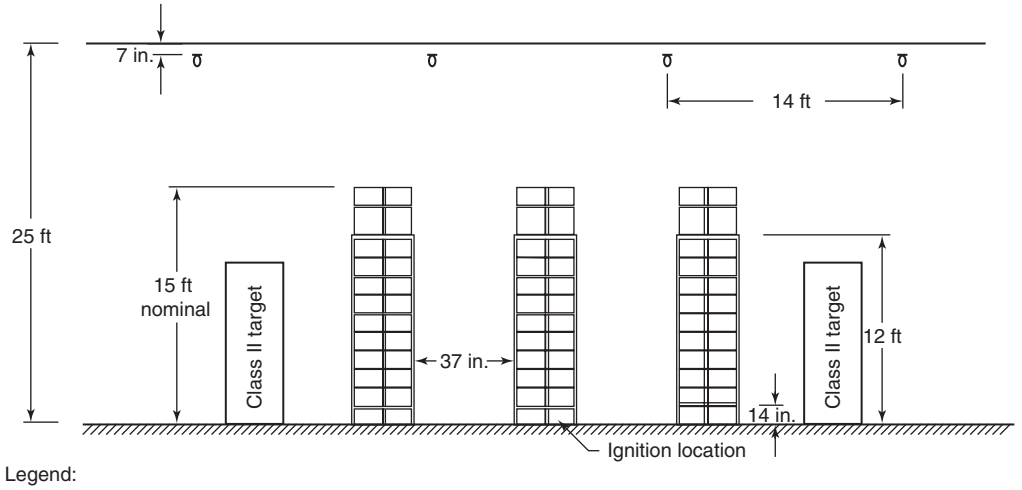

Legend:

- K-25.2 165°F QR upright-style sprinkler
- Group A plastic test commodity nominal 12.25 in. tall
- Group A plastic test commodity nominal 21 in. tall

Front Elevation View

FIGURE A.20.3(c) Fire Test A3.

Copyright 2014 National Fire Protection Association (NFPA). Licensed, by agreement, for individual use and download on October 4, 2014 to LEADER and READER for designated user PATTARAPORN SRITRAKOOL. No other reproduction or transmission in any form permitted without written permission of NFPA. For inquires or to report unauthorized use, contact licensing@nfpa.org.

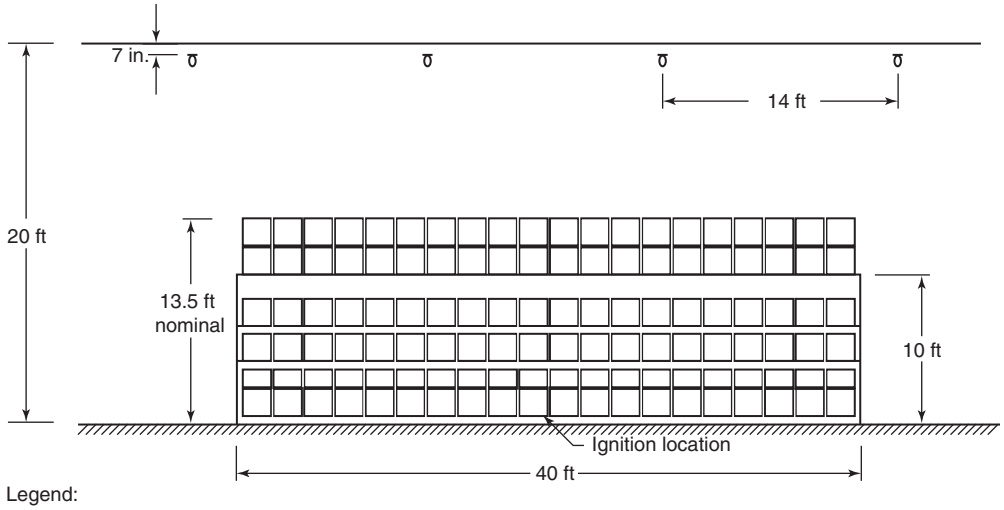

Legend:

- K-25.2 165°F upright-style sprinkler
- Group A plastic test commodity nominal 12.25 in. tall
- Group A plastic test commodity nominal 21 in. tall

Side Elevation View of Main Array

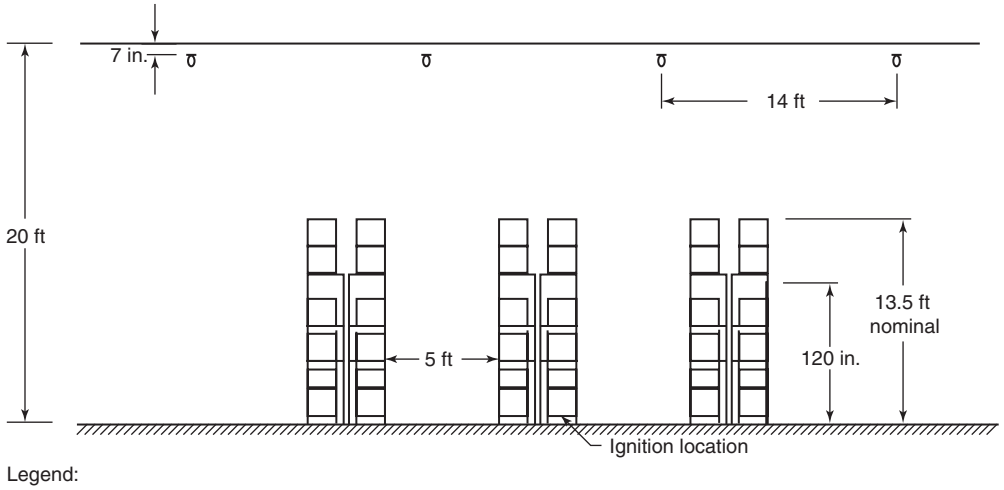

Legend:

- K-25.2 165°F upright-style sprinkler
- Group A plastic test commodity nominal 12.25 in. tall
- Group A plastic test commodity nominal 21 in. tall

Front Elevation View

FIGURE A.20.3(d) Fire Test A4.

Copyright 2014 National Fire Protection Association (NFPA). Licensed, by agreement, for individual use and download on October 4, 2014 to LEADER and READER for designated user PATTARAPORN SRITRAKOOL. No other reproduction or transmission in any form permitted without written permission of NFPA. For inquires or to report unauthorized use, contact licensing@nfpa.org.

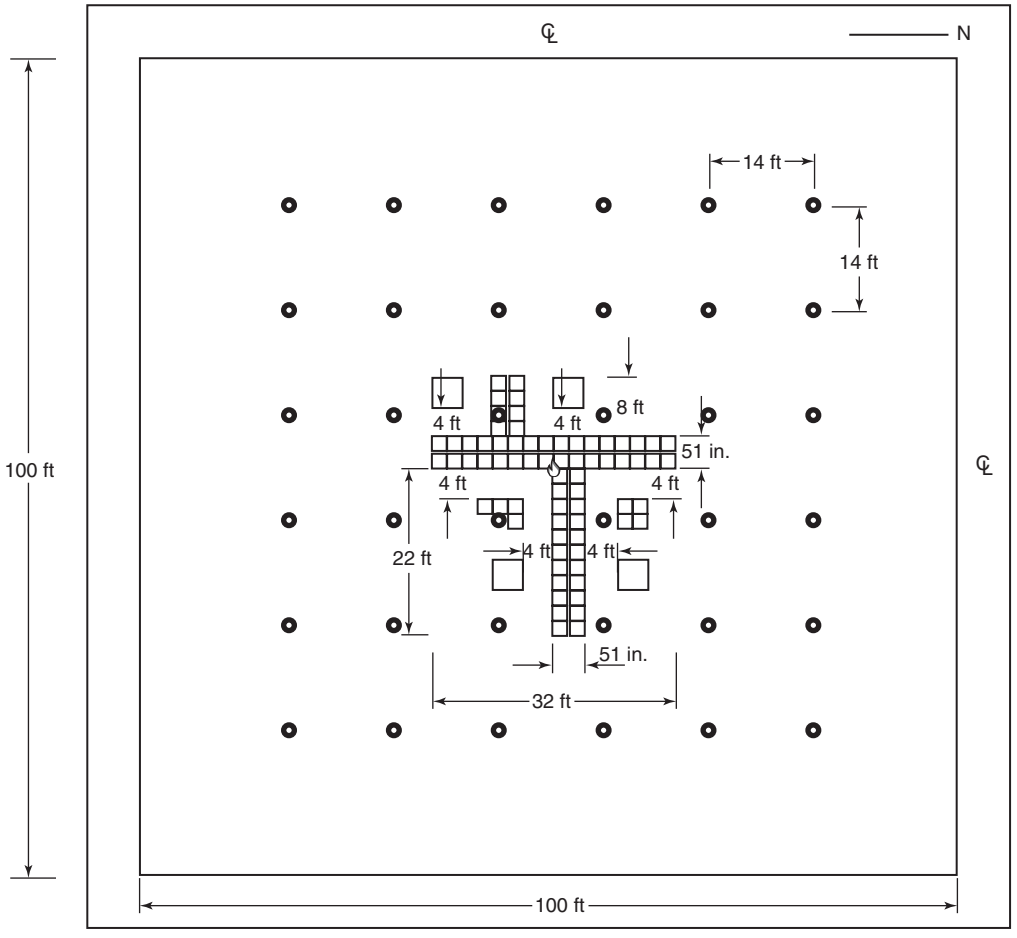

Shelving suspended on wire uprights at 24 in., 48 in., 72 in., 96 in., and 120 in. with a wire shelf at 148 in.

Legend:

- K-25.2 upright-style sprinkler 165°F QR, 0.55 gpm/ft² water density for first four sprinkler operations, then 0.49 gpm/ft² for all additional operations
- Group A plastic test commodity
- Class II target commodity
- Ignition location

Plan View

FIGURE A.20.3(e) Fire Test A6 — Plan View.

Copyright 2014 National Fire Protection Association (NFPA). Licensed, by agreement, for individual use and download on October 4, 2014 to LEADER and READER for designated user PATTARAPORN SRITRAKOOL. No other reproduction or transmission in any form permitted without written permission of NFPA. For inquires or to report unauthorized use, contact licensing@nfpa.org.

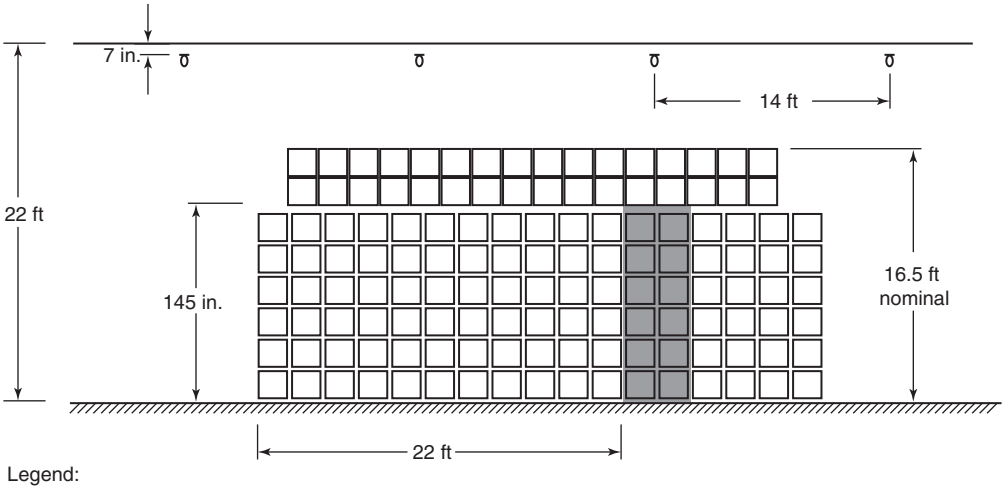

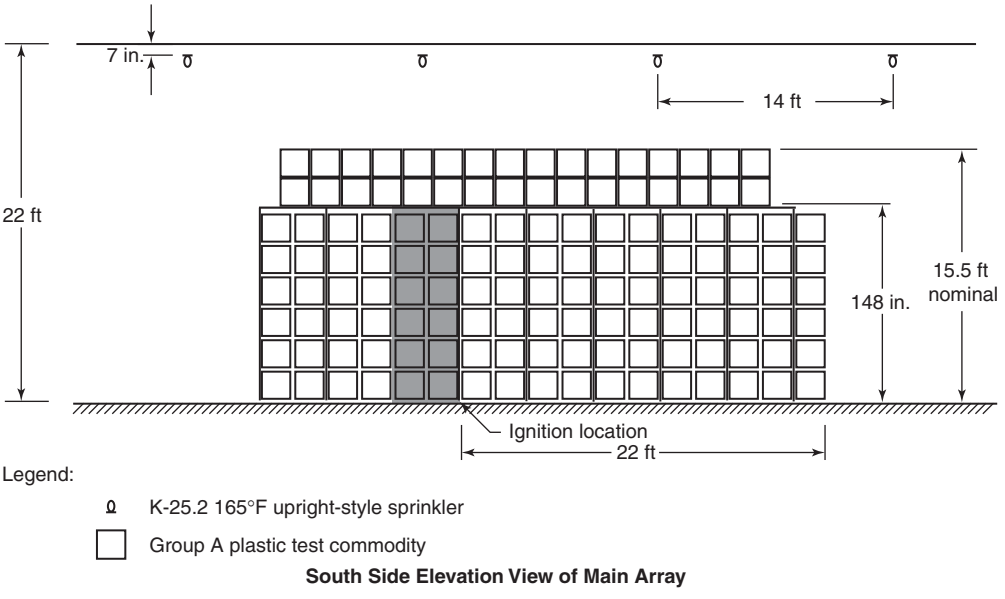

FIGURE A.20.3(f) Fire Test A6 — Main Array (North/South).

Copyright 2014 National Fire Protection Association (NFPA). Licensed, by agreement, for individual use and download on October 4, 2014 to LEADER and READER for designated user PATTARAPORN SRITRAKOOL. No other reproduction or transmission in any form permitted without written permission of NFPA. For inquires or to report unauthorized use, contact licensing@nfpa.org.

A.20.5.6.3.5 Figure A.20.5.6.3.5(a) through Figure A.20.5.6.3.5(c) illustrate a typical rack layout for carton records storage showing the design and installation of in-rack sprinklers underneath the catwalks and in the transverse flues.

A.20.6.1 NFPA 13 contains protection criteria for limited configurations of compact mobile storage units and materials stored. Storage arrangements not specifically addressed in NFPA 13 are outside the scope of the standard (i.e., protection for commodities other than paper files, magazines, or books in compact mobile storage units does not simply follow high-piled storage protection criteria for shelves or racks). Where compact mobile storage configurations outside the scope of NFPA 13 are to be utilized, they must be addressed on a case-by-case basis with consideration given to the fact that no known sprinkler protection criteria is currently available. Additional protection features, such as rated construction, barriers within the storage, consideration for safe locating away from vulnerable areas, and methods for control or exhausting of the smoke, should be considered.

A.20.6.5 Steel barriers that are shown to have equivalent resistance to passage of flames and heat transfer in fire tests as solid 24 gauge steel barriers are permitted.



FIGURE A.20.5.6.3.5(a) Typical Carton Record Storage Sprinkler Installation.

Copyright 2014 National Fire Protection Association (NFPA). Licensed, by agreement, for individual use and download on October 4, 2014 to LEADER and READER for designated user PATTARAPORN SRITRAKOOL. No other reproduction or transmission in any form permitted without written permission of NFPA. For inquires or to report unauthorized use, contact licensing@nfpa.org.

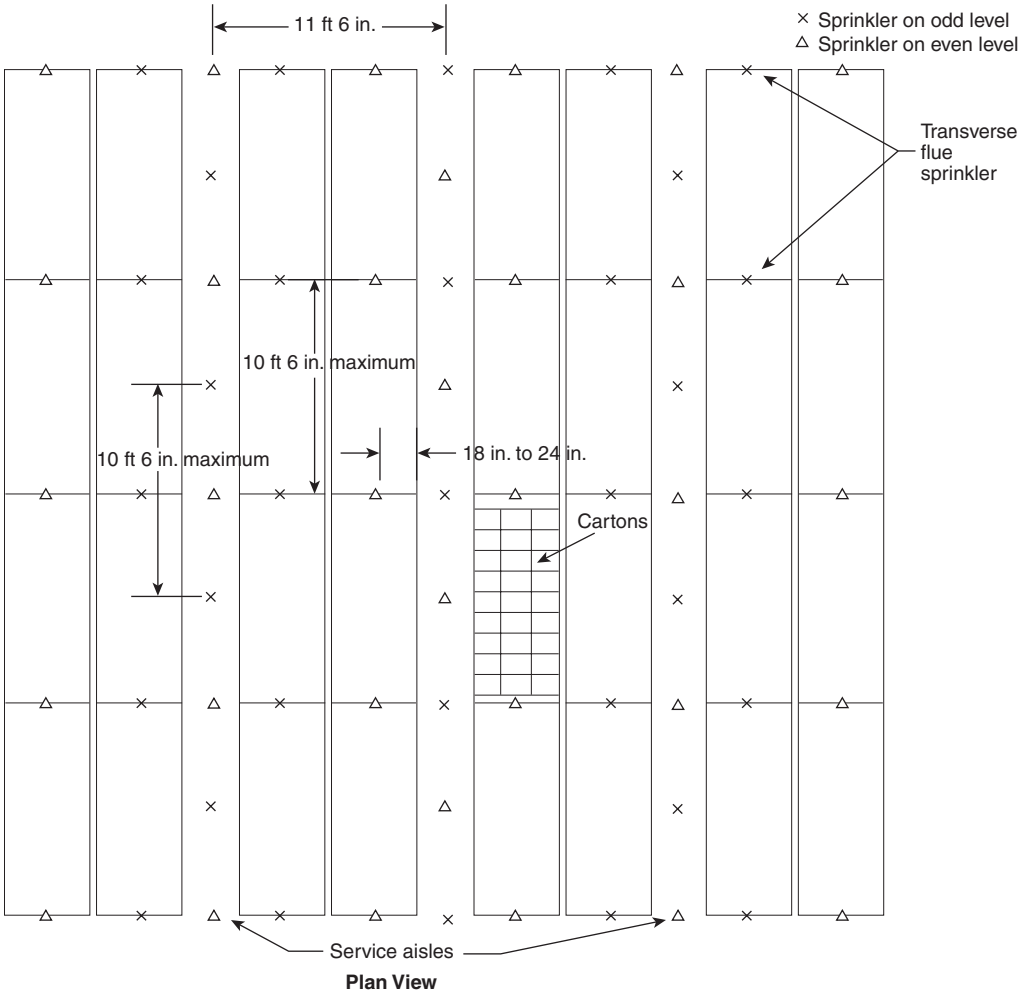

FIGURE A.20.5.6.3.5(b) Plan View of Sprinkler Locations in Carton Record Storage.

A.20.7.1 See Figure A.20.7.1.

A.21.1 The intent of this chapter is to provide protection options for the commodity hazards and storage arrangements outlined in Chapters 12 through 20 based on the characteristics of the sprinkler, such as K-factor, orientation, RTI rating, sprinkler spacing type and temperature rating, and using a design format of number of sprinklers at a minimum operating pressure. The protection options offered in this chapter will be based on the results of full-scale fire testing, as outlined in A.21.2 or A.21.3, while incorporating a minimum 50 percent safety factor into the number of sprinklers provided in the design. The intent of this chapter is to offer protection options using sprinklers having a nominal K-factor of 11.2 (160) or higher.

A.21.2 The protection options offered in Section 21.2 are intended to be based on the results of full-scale fire tests conducted at a recognized testing laboratory using the standardized testing methods established by the testing laboratory and supplemented within this chapter.

Protection options for this chapter can be based on storage arrangements other than palletized, solid piled, bin box, shelf storage, or back-to-back shelf storage, provided that the tested storage arrangement (such as rack storage) is deemed more hazardous than the storage arrangements outlined for this chapter.

Ceiling-level sprinkler system designs for this chapter should include a series of tests to evaluate the ability of the sprinkler to control or suppress a fire under a range of test variables for the commodity to be protected when maintained in a storage arrangement applicable to Section 21.2. The sprinkler standards referenced in Table A.6.1.1 provide detailed information regarding representative test commodities, measurement of steel temperatures, and the construction of igniters used to initiate the fire.

Test parameters to be held constant during the test series should include at least the following:

(1) Minimum operating pressure of the sprinklers
(2) Highest commodity hazard that will apply to the protection option
(3) Storage arrangement type

Test parameters that can vary during the test series should include at least the following:

(1) Ignition locations relative to the overhead sprinklers including the following:

Copyright 2014 National Fire Protection Association (NFPA). Licensed, by agreement, for individual use and download on October 4, 2014 to LEADER and READER for designated user PATTARAPORN SRITRAKOOL. No other reproduction or transmission in any form permitted without written permission of NFPA. For inquires or to report unauthorized use, contact licensing@nfpa.org.

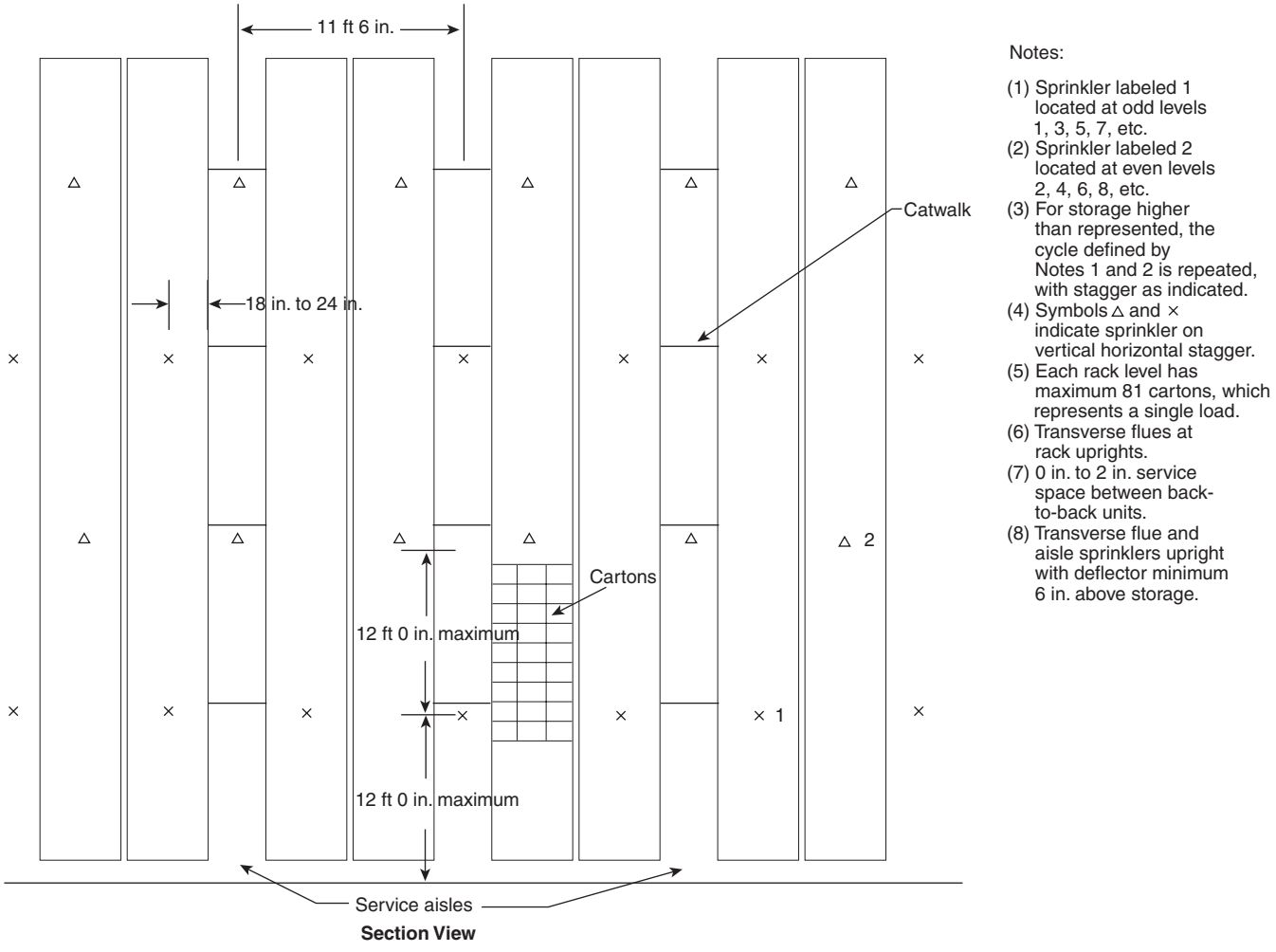

FIGURE A.20.5.6.3.5(c) Section View of Sprinkler Locations in Carton Record Storage.

(a) Under one sprinkler
(b) Between two sprinklers on the same branch line
(c) Between four sprinklers
(d) ADD analysis can be used to choose either option (b) or (c)

(2) Maximum ceiling height *(see Table A.21.2 for ceiling height variance)*; representative tests at each ceiling height limitation that has a discrete minimum operating pressure or number of sprinklers required to be included in the hydraulic calculation
(3) Storage heights that are based on the following clearances between the deflector of the ceiling-level sprinkler and the top of storage:
(a) Minimum clearance, which is typically 3 ft (0.9 m)
(b) Nominal 10 ft (3.1 m) clearance
(c) Nominal 20 ft (6.1 m) clearance for maximum ceiling heights of 40 ft (12.2 m) or higher
(4) Minimum and maximum temperature ratings
(5) Minimum and maximum sprinkler spacing
(6) Maximum sprinkler distance below the ceiling when greater than 12 in. (305 mm).

See Figure A.21.2 for an example of a nominal 25 ft (7.6 m) high palletized storage fire test arrangement. See Table A.21.2 for a typical large-scale fire test series to investigate the performance of a sprinkler covered by this chapter having a standard coverage area and a discrete minimum operating pressure for a 30 ft (9.1 m) ceiling height.

In addition to determining the number of operated sprinklers, the maximum 1 minute average steel temperature measured above the fire should not exceed 1000°F (538°C), and there should be no sustained combustion at the far end of the main test array and at the outer edges of the target arrays during each test. In addition, no sprinklers should operate at the outer edges of the installed sprinkler system.

The number of sprinklers to be used in the sprinkler system design will be based on the worst-case result obtained from the full-scale fire test series increased by a minimum 50 percent. Regardless of the number of sprinklers that operated during the worst-case full-scale fire test, the number in the sprinkler system demand will be no less than 12 sprinklers for standard coverage sprinklers or 6 sprinklers for extended coverage sprinklers.

A.21.3 The protection options offered in Section 21.3 are intended to be based on the results of full-scale fire tests conducted at a recognized testing laboratory using the standardized testing methods established by the testing laboratory and supplemented within this chapter.

Copyright 2014 National Fire Protection Association (NFPA). Licensed, by agreement, for individual use and download on October 4, 2014 to LEADER and READER for designated user PATTARAPORN SRITRAKOOL. No other reproduction or transmission in any form permitted without written permission of NFPA. For inquires or to report unauthorized use, contact licensing@nfpa.org.

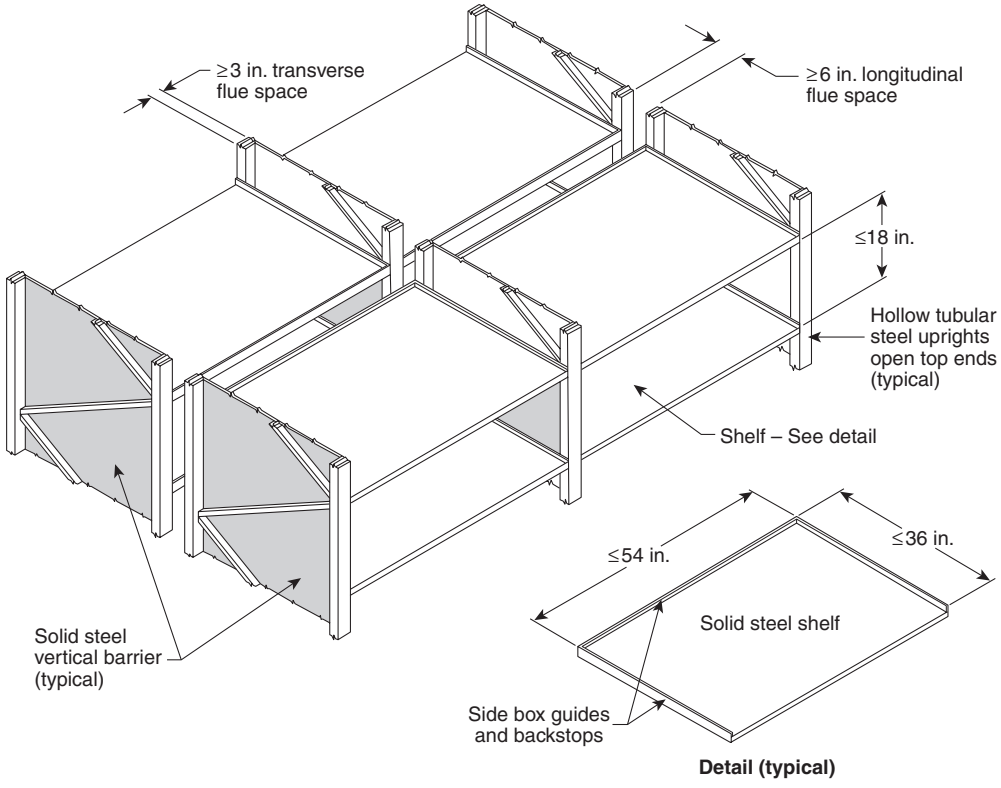

FIGURE A.20.7.1 Typical Fixed High Bay Record Storage Structure.

Ceiling-level sprinkler system designs for this chapter should include a series of tests to evaluate the ability of the sprinkler to control or suppress a fire under a range of test variables for the commodity to be protected when maintained in a storage arrangement applicable to Section 21.3. The sprinkler standards referenced in Table A.6.1.1 provide detailed information regarding representative test commodities, measurement of steel temperatures, and the construction of igniters used to initiate the fire.

Test parameters to be held constant during the test series should include at least the following:

(1) Minimum operating pressure of the ceiling-level sprinklers
(2) Highest commodity hazard that will apply to the protection option
(3) Storage arrangement type
(4) Minimum aisle width

Test parameters that can vary during the test series should include at least the following:

(1) Ignition locations relative to the overhead sprinklers including the following:
  (a) Under one sprinkler
  (b) Between two sprinklers on the same branch line
  (c) Between four sprinklers
  (d) ADD analysis can be used to choose either option (b) or (c)
(2) Maximum ceiling height *(see Table A.21.2 for ceiling height variance)*; representative tests at each ceiling height limitation that has a discrete minimum operating pressure or number of sprinklers required to be included in the hydraulic calculation
(3) Storage heights that are based on the following clearances between the deflector of the ceiling-level sprinkler and the top of storage:
  (a) Minimum clearance, which is typically 3 ft (0.9 m)
  (b) Nominal 10 ft (3.1 m) clearance
  (c) Nominal 20 ft (6.1 m) clearance for maximum ceiling heights of 40 ft (12.2 m) or higher
(4) Minimum and maximum temperature ratings
(5) Minimum and maximum sprinkler spacing
(6) Maximum sprinkler distance below the ceiling when greater than 12 in. (305 mm)

Historical testing has indicated that a double-row rack storage arrangement is considered representative of single- and multiple-row rack storage. The ignition location relative to the sprinkler has been demonstrated to be a key variable associated with full-scale fire tests. The critical ignition scenarios include locating (1) one of the sprinklers directly above the center of the main storage array, (2) two of the sprinklers on the same branch line such that the midpoint between the two sprinklers is directly above the center of the storage array, and (3) four sprinklers (two each on adjacent branch lines) such that the geometric center point between the four sprinklers is located directly above the center of the main storage array. The igniters for this testing should be placed at the base of the storage array and offset from the center of the main array in the transverse flue space as illustrated in Figure A.21.3. Previous testing has demonstrated that an offset ignition location represents a challenging test scenario.

Copyright 2014 National Fire Protection Association (NFPA). Licensed, by agreement, for individual use and download on October 4, 2014 to LEADER and READER for designated user PATTARAPORN SRITRAKOOL. No other reproduction or transmission in any form permitted without written permission of NFPA. For inquires or to report unauthorized use, contact licensing@nfpa.org.

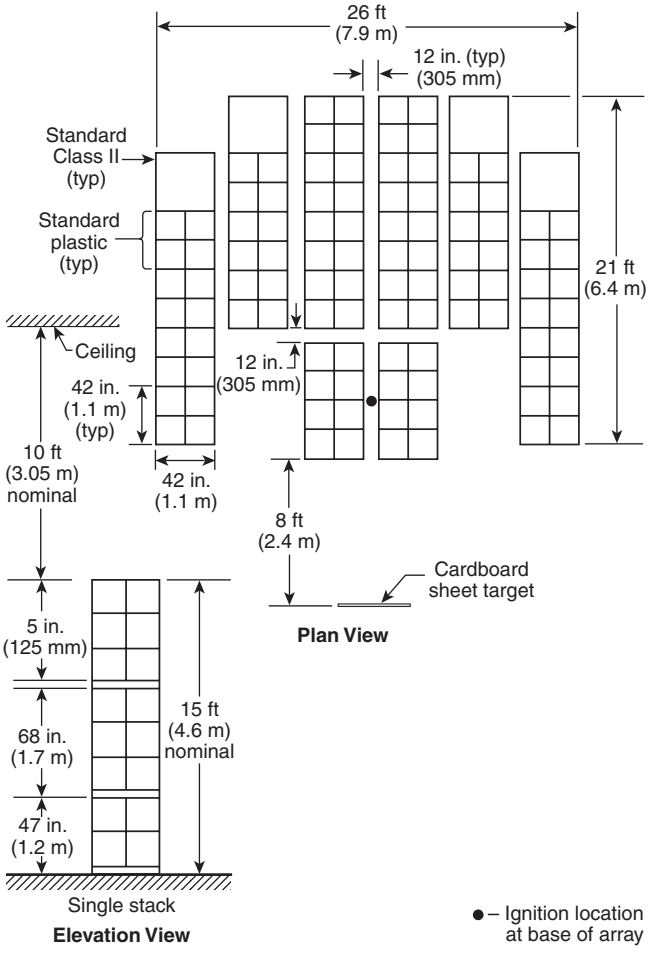

FIGURE A.21.2 Typical Example of 15 ft (4.6 m) Palletized Storage Full-Scale Fire Test Arrangement.

A double-rack storage array should be a nominal 32 ft (9.8 m) long with single-row target arrays located on each side of the main array. The sprinkler branch lines should be installed in a direction that is perpendicular to the longitudinal flue spacing of the storage arrangement, and the branch lines over the test array should be sized such that they represent the largest obstruction for upright-style sprinklers. See Figure A.21.3 for an example of a nominal 30 ft (9.1 m) high double-row rack storage fire test arrangement. See Table A.21.3(a) and Table A.21.3(b) for a typical full-scale fire test series to investigate the performance of a sprinkler covered by this chapter having a standard coverage area and a discrete minimum operating pressure for a 40 ft (12.2 m) ceiling height.

In addition to determining the number of operated sprinklers, the maximum 1 minute average steel temperature measured above the fire should not exceed 1000°F (538°C), and there should be no sustained combustion at the far end of the main test array and at the outer edges of the target arrays during each test. In addition, no sprinklers should operate at the outer edges of the installed sprinkler system.

The number of sprinklers to be used in the sprinkler system design will be based on the worst-case result obtained from the full-scale fire test series increased by a minimum 50 percent. Regardless of the number of sprinklers that operated during the worst-case full-scale fire test, the number in the sprinkler system demand will be no less than 12 sprinklers for standard coverage sprinklers or 6 sprinklers for extended coverage sprinklers.

Once the number of sprinklers for a demand area has been established, the minimum operating area, based on the proposed sprinkler spacing, cannot be less than 768 ft^2 (71 m^2).

A.22.4.1.1 Spray application operations should be located only in buildings that are completely protected by an approved system of automatic sprinklers. If the operations are located in unsprinklered buildings, sprinklers should be installed to protect spray application processes where practical. Because of the rapidity and intensity of fires that involve spray operations, the available water should be ample to simultaneously supply all sprinkler

Table A.21.2 Typical Example of 25 ft (7.6 m) Palletized Storage Under 30 ft (9.1 m) Ceiling Full-Scale Fire Test Series on Simulated Wet-Type Sprinkler System (considers ADD results)

Parameter	Test 1	Test 2	Test 3	Test 4
Storage type	Palletized	Palletized	Palletized	Palletized
Nominal storage height, ft (m)	20 (6.1)	25 (7.6)	20 (6.1)	20 (6.1)
Nominal ceiling height, ft (m)	30 (9.1)	Adjusted to achieve minimum sprinkler deflector to commodity clearance	30 (9.1)	30 (9.1)
Sprinkler temperature rating	Minimum temperature rating	Maximum temperature rating	Minimum temperature rating	Minimum temperature rating
Nominal deflector to ceiling distance, in (cm)	Maximum specified by manufacturer	Maximum specified by manufacturer	Maximum specified by manufacturer	Maximum specified by manufacturer
Sprinkler spacing, 20 ft (6.1 m)	Maximum permitted by NFPA 13	Maximum permitted by NFPA 13	Minimum permitted by NFPA 13	Maximum permitted by NFPA 13
Nominal discharge pressure, psig (kPa)	Minimum operating	Minimum operating	Minimum operating	Minimum operating
Ignition location	Under one	Between two on same branch line or between four	Under one	Between two on same branch line or Between four
Test duration, minutes	30	30	30	30

Copyright 2014 National Fire Protection Association (NFPA). Licensed, by agreement, for individual use and download on October 4, 2014 to LEADER and READER for designated user PATTARAPORN SRITRAKOOL. No other reproduction or transmission in any form permitted without written permission of NFPA. For inquires or to report unauthorized use, contact licensing@nfpa.org.

heads likely to open in one fire without depleting the available water for use by hose streams. Noncombustible draft curtains can be used to limit the number of sprinklers that will open.

Even when areas adjacent to coating operations are considered under reasonably positive fire control by adequate automatic sprinkler protection, damage is possible if operations are conducted on floors above those containing contents that are highly susceptible to water damage. Waterproofing and drainage of spray room floors can assist in reducing water damage on floors below. Proper drainage of the large volume of water frequently necessary to extinguish spray finishing room fires often presents considerable difficulty. [**33:** A.9.4]

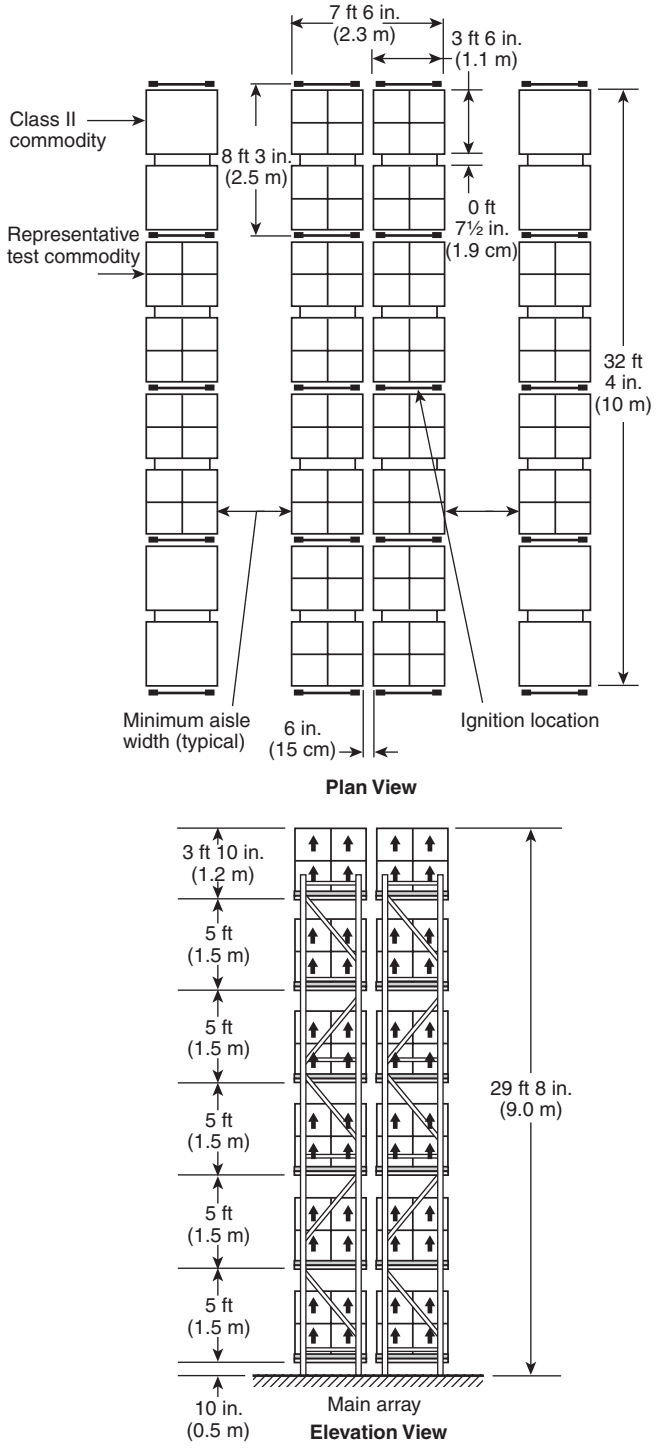

FIGURE A.21.3 Typical Example of 30 ft (9.1 m) Double-Row Rack Storage Fire Test Arrangement.

Subsection 22.4.1.1 lists four types of automatic sprinkler systems and requires that the one "most appropriate for the portion of the spray area being protected" be used. Generally, an open-head deluge system provides the highest level of protection, given that all sprinklers in the protected area flow simultaneously. This type of system is most appropriate for large, downdraft, water-wash spray booths when protecting automatic electrostatic spray application zones.

Wet pipe automatic sprinkler systems are appropriate for protecting spray booths that utilize nonelectrostatic application processes or operations using listed electrostatic application processes. Wet pipe systems are also generally used to protect exhaust plenums (eliminator or scrubber sections), exhaust ducts, and air recirculation filter houses.

Dry pipe systems have been included because some exhaust duct designs include sections that are subject to freezing.

Preaction systems have been included because some spray application processes and equipment can be damaged by unwanted water discharge. This damage can be disruptive and costly. Powder spray booths and solvent concentrator (air pollution abatement) systems are examples of systems where it is appropriate to use a preaction system. [**33:** A.9.4.1]

A.22.4.2 The area of sprinkler operation includes all sprinklers within the individual spray area as defined by NFPA 33, 3.3.2.3.

A.22.4.2.1 Automatic sprinklers in spray areas, including the interior of spray booths and exhaust ducts, should be wet pipe, preaction, or deluge system so that water can be placed on the fire in the shortest possible time. Automatic sprinklers in spray booths and exhaust ducts should be of the lowest practical temperature rating. The delay in application of water with ordinary dry pipe sprinklers can permit a fire to spread so rapidly that final extinguishment is difficult without extensive resulting damage.

The location of the sprinkler heads inside spray booths should be selected with care in order to avoid heads being placed in the direct path of spray and yet afford protection for the entire booth interior. When sprinkler heads are in the direct path of spray, even one day's operation can result in deposits on the sprinkler heads that insulate the fusible link or choke open head orifices to the extent that sprinklers cannot operate efficiently.

Automatic sprinklers should also be located so that areas subject to substantial accumulations of overspray residue are protected. Generally, sprinklers are located no more than 4 ft (1.2 m) from side walls of booths and rooms and from dry overspray collectors (where applicable). Sprinklers in booths or rooms should be on Extra Hazard Occupancy spacing of 90 ft^2 (8.4 m^2).

All sprinklers in spray areas should be controlled by an accessible control valve, preferably an outside stem and yoke (OS&Y) valve. [**33:** A.9.4]

Water supply requirements for most industrial paint spray operations should be adequate to supply all automatic sprinklers in the spray area. Loss experience has shown that fires

Copyright 2014 National Fire Protection Association (NFPA). Licensed, by agreement, for individual use and download on October 4, 2014 to LEADER and READER for designated user PATTARAPORN SRITRAKOOL. No other reproduction or transmission in any form permitted without written permission of NFPA. For inquires or to report unauthorized use, contact licensing@nfpa.org.

Table A.21.3(a) Typical Example of a 35 ft (10.7 m) Rack Storage Under a 40 ft (12.2 m) Ceiling Full-Scale Fire Test Series on a Simulated Wet-Type Sprinkler System (considers ADD results)

Parameter	Test 1	Test 2	Test 3	Test 4
Storage type	Double-row rack	Double-row rack	Double-row rack	Double-row rack
Nominal storage height, ft (m)	30 (9.1)	35 (10.7)	30 (9.1)	20 (6.1)
Nominal ceiling height, ft (m)	40 (12.2)	Adjusted to achieve minimum sprinkler deflector to commodity clearance	40 (12.2)	40 (12.2)
Sprinkler temperature rating	Minimum temperature rating	Maximum temperature rating	Minimum temperature rating	Minimum temperature rating
Nominal deflector to ceiling distance, in. (cm)	Maximum specified by manufacturer	Maximum specified by manufacturer	Maximum specified by manufacturer	Maximum specified by manufacturer
Sprinkler spacing, 20 ft (6.1 m)	Maximum permitted by NFPA 13	Maximum permitted by NFPA 13	Minimum permitted by NFPA 13	Maximum permitted by NFPA 13
Nominal discharge pressure, psig (kPa)	Minimum operating	Minimum operating	Minimum operating	Minimum operating
Ignition location	Under one	Between two on same branch line or between four	Under one	Between two on same branch line or between four
Test duration, minutes	30	30	30	30

Table A.21.3(b) Typical Example of 35 ft (10.7 m) Rack Storage Under 40 ft (12.2 m) Ceiling Full-Scale Fire Test Series on a Simulated Wet-Type Sprinkler System

Parameter	Test 1	Test 2	Test 3	Test 4
Storage type	Double-row rack	Double-row rack	Double-row rack	Double-row rack
Nominal storage height, ft (m)	30 (9.1)	35 (10.7)	30 (9.1)	20 (6.1)
Nominal ceiling height, ft (m)	40 (12.2)	Adjusted to achieve minimum sprinkler deflector to commodity clearance	40 (12.2)	40 (12.2)
Sprinkler temperature rating	Minimum temperature rating	Maximum temperature rating	Minimum temperature rating	Minimum temperature rating
Nominal deflector to ceiling distance, in (cm)	Within 12 (30.5)	Maximum specified by manufacturer	Maximum specified by manufacturer	Maximum specified by manufacturer
Sprinkler spacing, 20 ft (6.1 m)	10 × 10 (3.0 × 3.0)	10 × 10 (3.0 × 3.0)	10 × 10 (3.0 × 3.0)	10 × 10 (3.0 × 3.0)
Nominal discharge pressure, psig (kPa)	Minimum operating	Minimum operating	Minimum operating	Minimum operating
Ignition location	Under one	Between four	Between two on same branch line	Between two on same branch line
Test duration, minutes	30	30	30	30

starting in the exhaust duct can spread to the spray booth and that fires starting in the booth can spread to the exhaust duct.

Sprinklers or sprinkler systems protecting stacks or ducts should be of a type not subject to freezing. Automatic systems are preferred, but manual systems are also acceptable. For some industries, such as the automotive industry, manually operated open-head systems have proved to be effective protection for ducts and stacks. [**33:** A.9.4.6]

A.22.5.1 Water spray or deluge systems that are used to protect solvent extraction process equipment or structures should be designed to provide a density of not less than 0.25 gpm/ft^2 (10.3 mm/min) of protected surface area. (See NFPA 13 and NFPA 15, for additional information.) Foam-water sprinkler or deluge systems that are used for the same purposes should be designed to provide a density of not less than 0.16 gpm/ft^2 (6.5 mm/min) of protected surface area. (See NFPA 13 and NFPA 16 for additional information.)

Preparation buildings should be protected with automatic sprinkler systems designed for ordinary hazard (Group 2), in accordance with NFPA 13. [**36:** A.4.8]

Copyright 2014 National Fire Protection Association (NFPA). Licensed, by agreement, for individual use and download on October 4, 2014 to LEADER and READER for designated user PATTARAPORN SRITRAKOOL. No other reproduction or transmission in any form permitted without written permission of NFPA. For inquires or to report unauthorized use, contact licensing@nfpa.org.

A.22.6.1 Automatic sprinkler systems are considered to be effective in controlling lubricating oil fires. Sprinkler densities provided in this standard are based on Extra Hazard, Group 1 occupancy as defined in NFPA 13. Automatic sprinkler protection designed as local protection for the engine in many cases provides better protection than sprinkler protection installed only at the ceiling level, particularly in the case of pressurized lubricating oil fires.

Consideration should be given to providing local protection when the protected engine equipment is located in a high bay area. Delayed activation time or lack of water penetration could delay fire suppression from a ceiling system.

Local protection for engines can be accomplished using either a wet system or a single interlock pre-action deluge system with heat detection. Detectors for actuation of a pre-action system should be located above the engine and around the system piping.

For diesel engine installations, the system piping should loop the engine at the height of the cylinder heads.

Because of the tight radial clearances on combustion gas turbines and the potential for rubbing of rotating parts and increased damage, it is advisable to use great care if using a sprinkler or water spray suppression system. Water from a ceiling or spot protection system could effectively control a fire; however, gaseous suppression agents could be just as effective without the potential for equipment damage when the system activates. [**37:** A.11.4.5.1]

A.22.7.1.3 See Figure A.22.7.1.3. The illustration shows the location of sprinkler heads and the decomposition vent. [**40:** A.63]

A.22.7.1.8 One acceptable nozzle spray pattern would be such that at a 2.4 m (8 ft) distance the cone is about 1.5 m (5 ft) in diameter. See Figure A.22.7.1.8. [**40:** A.6.5.6.4]

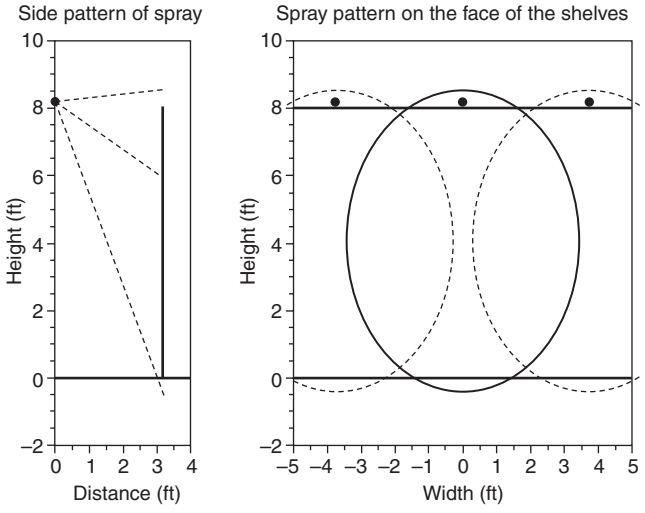

FIGURE A.22.7.1.8 Typical Nozzle Spray Pattern. [40:Figure A.6.5.6.4]

A.22.7.1.10 Figure A.22.7.1.10(a) shows an example of a nozzle layout consistent with the recommended arrangement for a vault design as shown in Figure A.22.7.1.10(b). [**40:** A.6.5.6.6]

A.22.14.2.1 In facilities that are under the supervision of an operator or other person familiar with the equipment, during all periods that equipment is energized, the normal delay between the initial outbreak of a fire and the operation of a

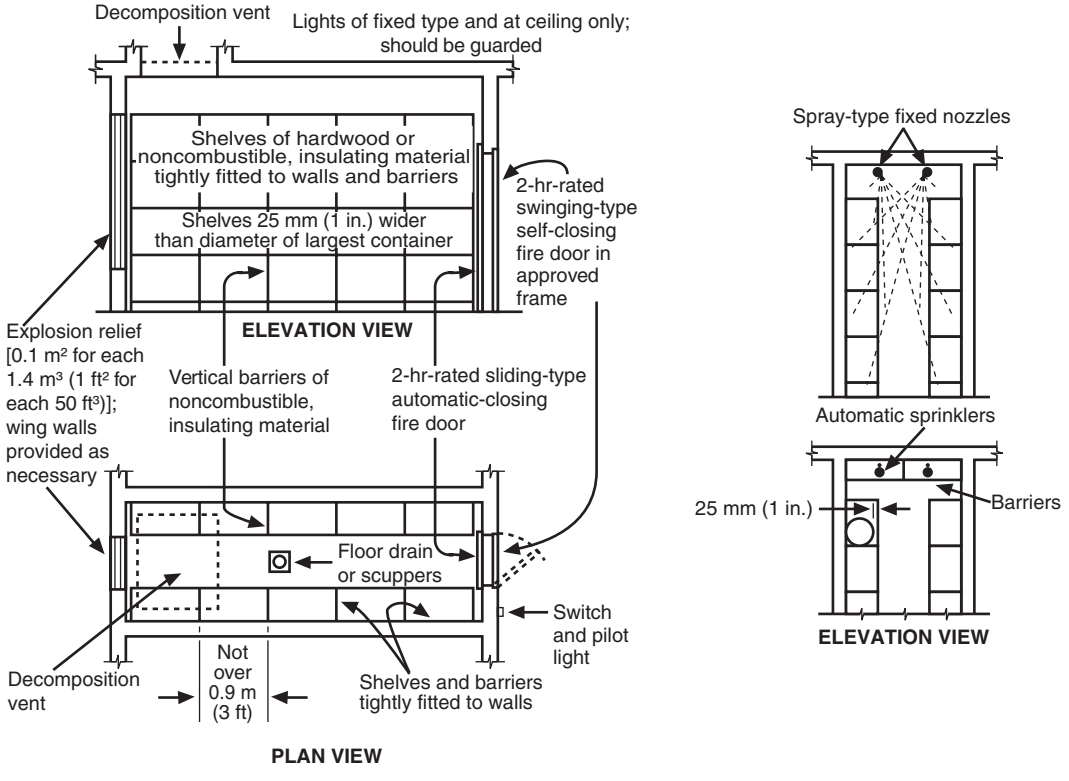

FIGURE A.22.7.1.3 Standard Film Vault (for Other Than Extended Term Storage Film). [40:Figure A.6.3]

Copyright 2014 National Fire Protection Association (NFPA). Licensed, by agreement, for individual use and download on October 4, 2014 to LEADER and READER for designated user PATTARAPORN SRITRAKOOL. No other reproduction or transmission in any form permitted without written permission of NFPA. For inquires or to report unauthorized use, contact licensing@nfpa.org.

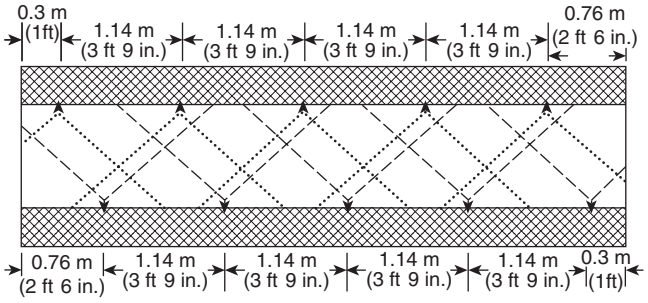

FIGURE A.22.7.1.10(a) Nozzle Layout for Typical Vault. [40:Figure A.6.5.6.6(a)]

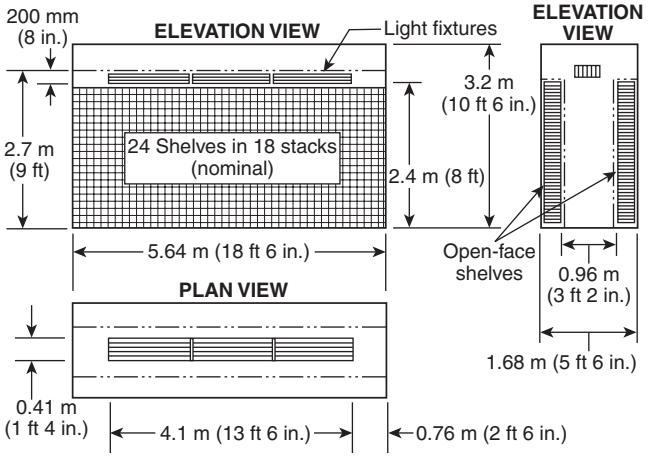

FIGURE A.22.7.1.10(b) Typical Vault Layout. [40:Figure A.6.5.6.6(b)]

sprinkler system will provide adequate time for operators to shut down the power by use of the electrical disconnecting means as prescribed in Section 10.4 of NFPA 75. In other instances where a fire can operate sprinkler heads before discovery by personnel, a method of automatic detection should be provided to automatically de-energize the electronic equipment as quickly as possible.

To minimize damage to electronic computer equipment located in sprinkler-protected areas, it is important that power be off prior to the application of water on the fire. [**75:** A.8.1.2]

A.22.14.2.3 The use of carbon dioxide systems for the protection of spaces beneath raised floors is discussed in Section B.5 of NFPA 12, wherein it is pointed out that the design of such systems requires compensation for leakage and provision for a soft discharge to minimize turbulence and agent loss through perforated tiles. These same concerns exist for other inert gas clean agent systems installed in accordance with NFPA 2001. Since these spaces are usually of a very limited height, this type of fire suppression system may be easier to design and install than sprinklers. [**75:** A.8.1.1.2]

A.22.15.2.2 See Figure A.22.15.2.2(a) through Figure A.22.15.2.2(h).

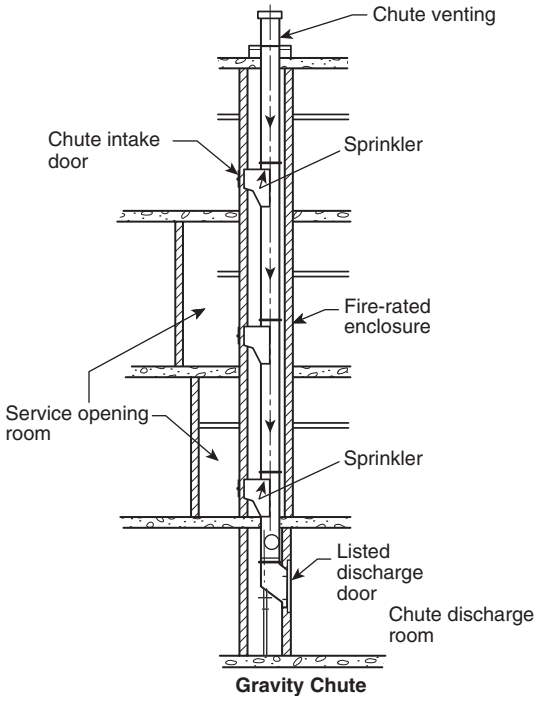

FIGURE A.22.15.2.2(a) Gravity Linen Chute. [82:Figure A.5.2(a)]

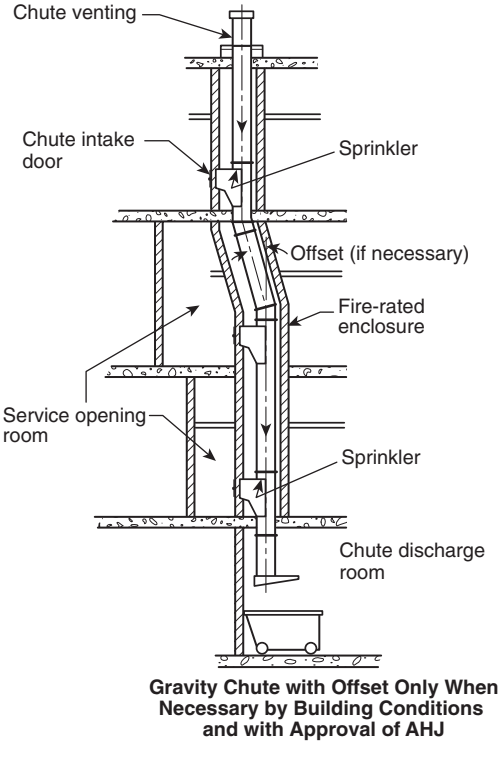

FIGURE A.22.15.2.2(b) Gravity Waste Chute. [82:Figure A.5.2(b)]

Copyright 2014 National Fire Protection Association (NFPA). Licensed, by agreement, for individual use and download on October 4, 2014 to LEADER and READER for designated user PATTARAPORN SRITRAKOOL. No other reproduction or transmission in any form permitted without written permission of NFPA. For inquires or to report unauthorized use, contact licensing@nfpa.org.

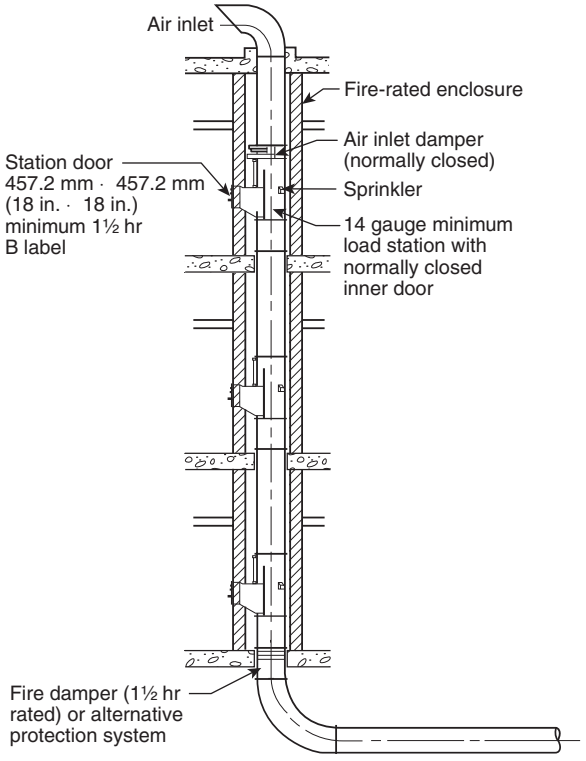

FIGURE A.22.15.2.2(c) Full Pneumatic System. [82:Figure A.5.3(a)]

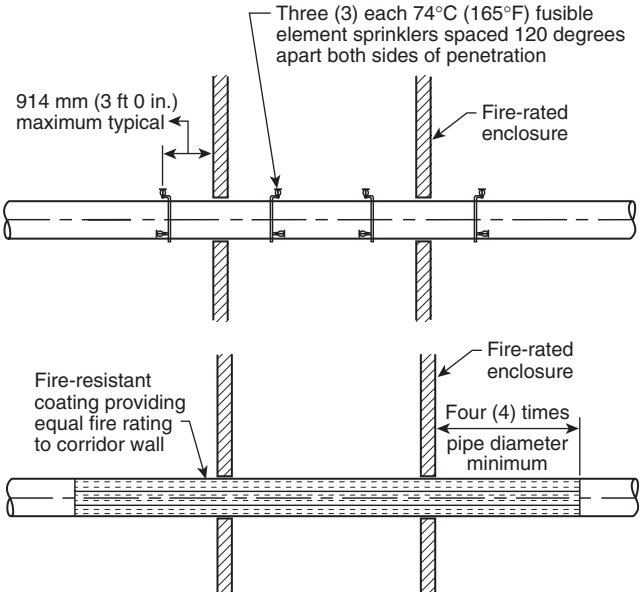

FIGURE A.22.15.2.2(e) Fire Damper Engineering Alternative for Penetration of Fire-Rated Enclosure. [82:Figure A.5.3(c)]

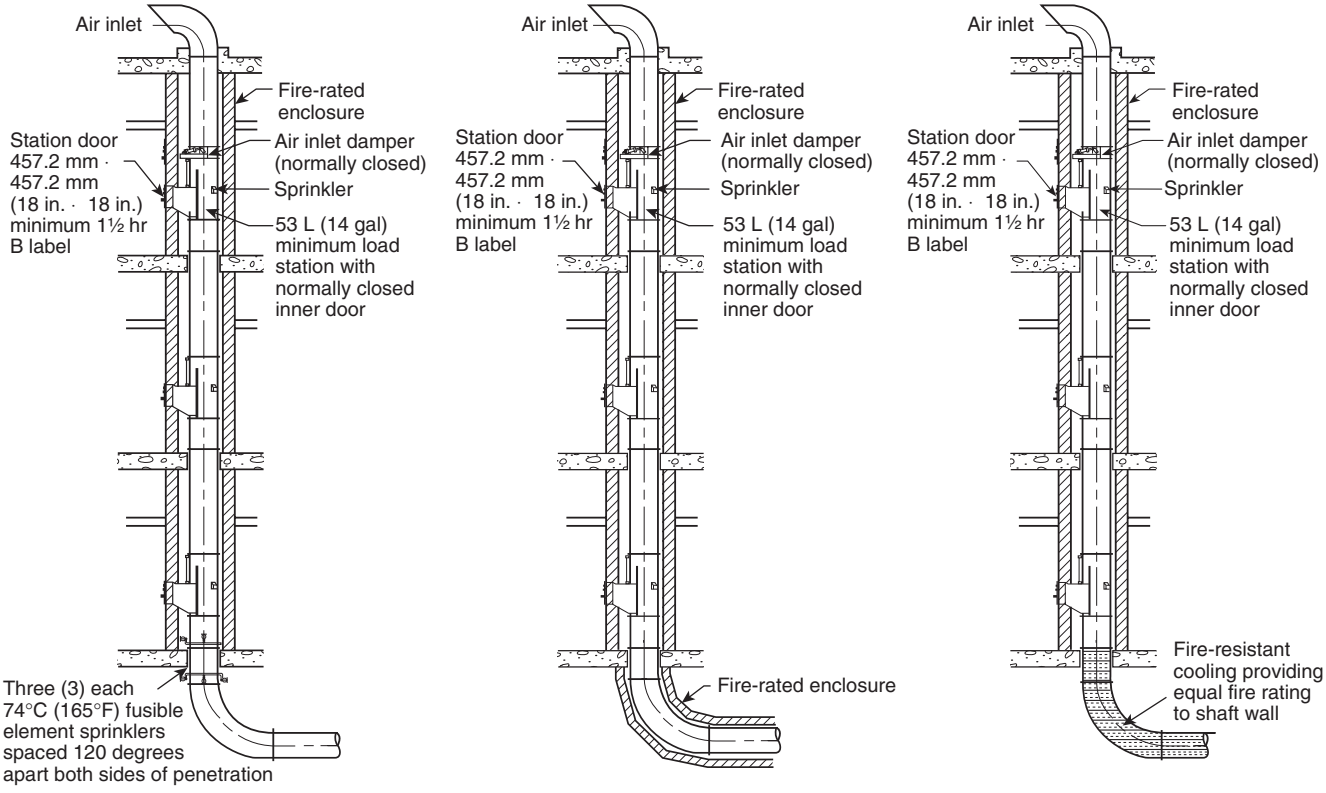

FIGURE A.22.15.2.2(d) Fire Damper Engineering Alternative for Penetration of Floor at Base of Shaft. [82:Figure A.5.3(b)]

Copyright 2014 National Fire Protection Association (NFPA). Licensed, by agreement, for individual use and download on October 4, 2014 to LEADER and READER for designated user PATTARAPORN SRITRAKOOL. No other reproduction or transmission in any form permitted without written permission of NFPA. For inquires or to report unauthorized use, contact licensing@nfpa.org.

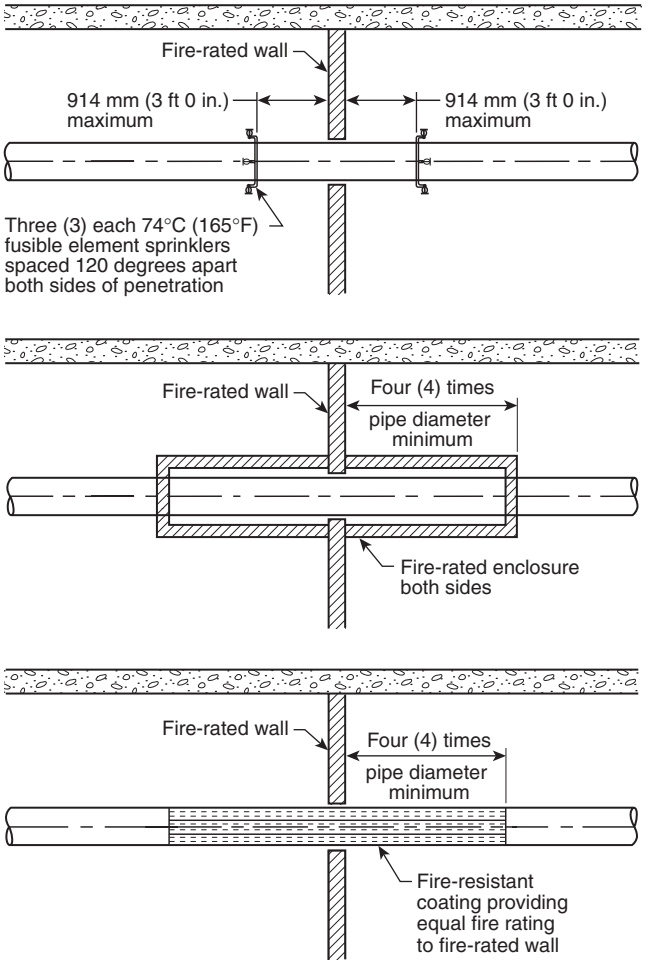

FIGURE A.22.15.2.2(f) Fire Damper Engineering Alternative for Penetration of Fire-Rated Wall. [82:Figure A.5.3(d)]

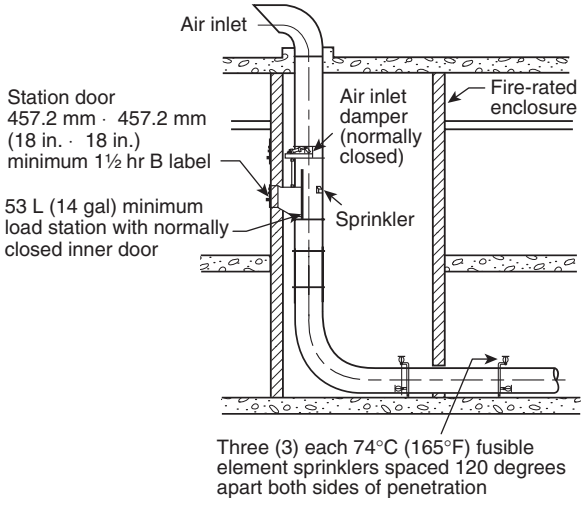

FIGURE A.22.15.2.2(g) Fire Damper Engineering Alternative for Penetration of Wall at Base of Shaft. [82:Figure A.5.3(e)]

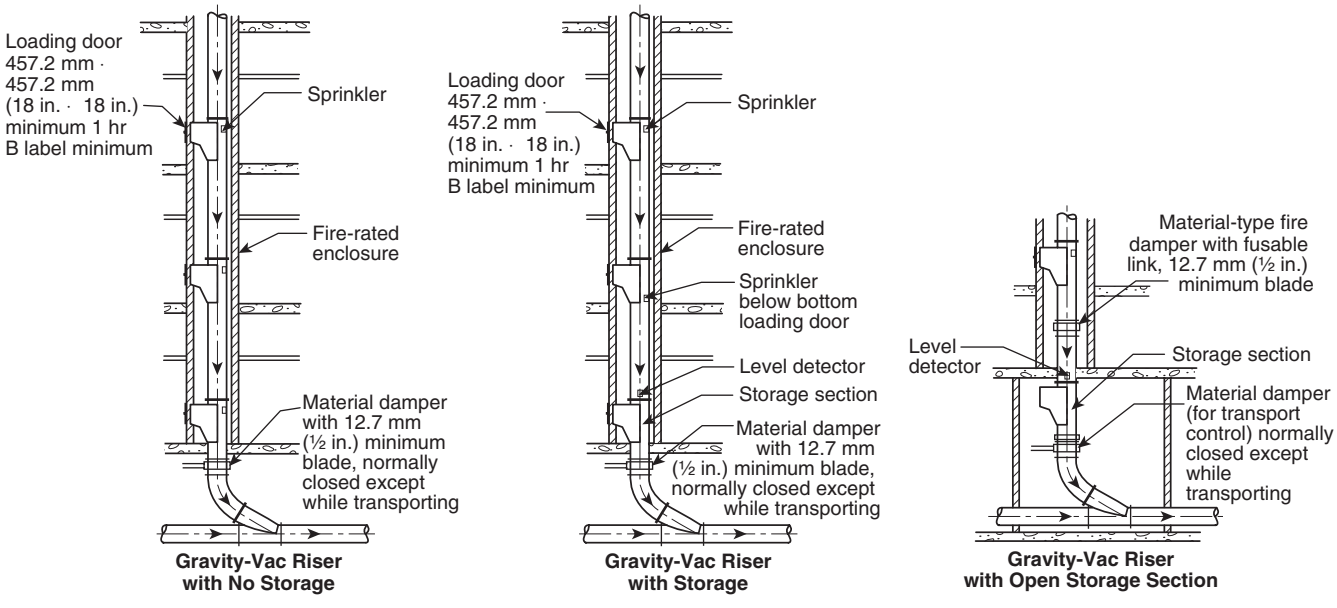

FIGURE A.22.15.2.2(h) Gravity Pneumatic System. [82:Figure A.5.4]

Copyright 2014 National Fire Protection Association (NFPA). Licensed, by agreement, for individual use and download on October 4, 2014 to LEADER and READER for designated user PATTARAPORN SRITRAKOOL. No other reproduction or transmission in any form permitted without written permission of NFPA. For inquires or to report unauthorized use, contact licensing@nfpa.org.

A.22.16.2.1 Automatic sprinkler protection should be considered for ovens, furnaces, or related equipment if any of the following conditions exists:

(1) The material being processed is combustible.
(2) Racks, trays, spacers, or containers are combustible.
(3) There are areas where appreciable accumulations of combustible drippings or deposits are present on the inside of the oven surface or on racks, trays, and so forth.

The type of sprinklers and arrangement should be appropriate to the oven arrangement, interior ductwork, and the material passing through the oven. [**86:** A.9.2.1]

A.22.16.2.6 At elevated temperatures, galvanizing can flake off of pipe surfaces, and the flakes can collect at and obstruct the discharge of the fire suppression system. **[86:** A.9.3.2]

A.22.17.1.5 More than one control station could be required in a compartment (lock) depending on its size. [**99:** A.14.2.5.2.4]

A.22.17.1.8 Experience has shown that, when water is discharged through conventional sprinkler heads into a hyperbaric atmosphere, the spray angle is reduced because of increased resistance to water droplet movement in the denser atmosphere. This is so, even though the water pressure differential is maintained above chamber pressure. Therefore, it is necessary to compensate by increasing the number of sprinkler heads. It is recommended that spray coverage tests be conducted at maximum chamber pressure.

Some chamber configurations, such as small-diameter horizontal cylinders, could have a very tiny floor, or even no floor at all. For horizontal cylinder chambers and spherical chambers, *floor level* should be taken to mean the level at ¼ diameter below the chamber centerline or actual floor level, whichever yields the larger floor area. [**99:** A.14.2.5.2.6]

A.22.19.4 See A.4.11.1.3.1 of NFPA 140. [**140:** A.5.11.4]

A.22.19.5 See A.4.11.1.3.1 of NFPA 140. [**140:** A.5.11.5]

A.22.21.1.1.1 A deluge system provides a higher degree of protection where water supplies are adequate. In climates that are subject to freezing temperatures, a deluge system minimizes the possibility of failure due to pipes freezing. [**214:** A.5.2.2.1]

A.22.21.1.1.2 The crossflow design is such that it is difficult to locate sprinklers in the most desirable spots for both water distribution and heat detection. This situation can be solved by separating these two functions and using separate water discharge and detection systems. [**214:** A.5.2.2.2]

A.22.21.1.5 See Figure A.22.21.2.5

A.22.21.1.7.1.1 Where a single deluge system protects an entire water-cooling tower, regardless of the number of cells, the water supply needs to be based on the entire deluge system coverage. *(See Figure A.22.21.1.7.1.1.)* [**214:** A.5.6.1.1]

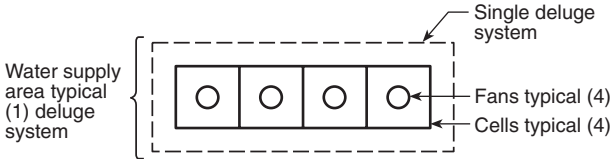

FIGURE A.22.21.1.7.1.1 Single Deluge System. [214:Figure A.5.6.1.1]

A.22.21.1.7.1.3 Deluge systems separated by fire-resistant partitions can be treated independently as worst-case water supply situations. *(See Figure A.22.21.1.7.1.3.)* [**214:** A.5.6.1.3]

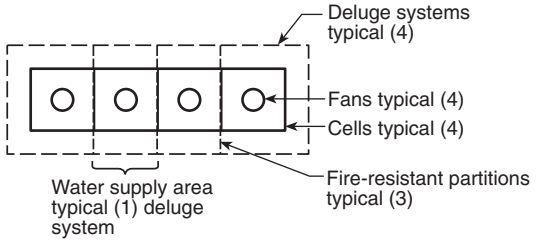

FIGURE A.22.21.1.7.1.3 Multiple Deluge Systems. [214:Figure A.5.6.1.3]

A.22.21.1.7.2.1 Water-cooling towers with each cell separated by a fire-resistant partition and protected by wet, dry, or preaction system(s) should have the water supply based on the most demanding individual cell. *(See Figure A.22.21.1.7.2.1.)* [**214:** A.5.6.2.1]

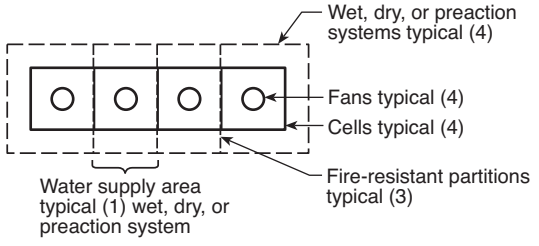

FIGURE A.22.21.1.7.2.1 Multiple Wet, Dry, or Preaction Systems with Fire-Resistant Partitions. [214:Figure A.5.6.2.1]

A.22.21.1.7.2.2 Without fire-resistant partitions between cells, the worst-case situation involves the most demanding adjoining cells. *(See Figure A.22.21.1.7.2.2.)* [**214:** A.5.6.2.2]

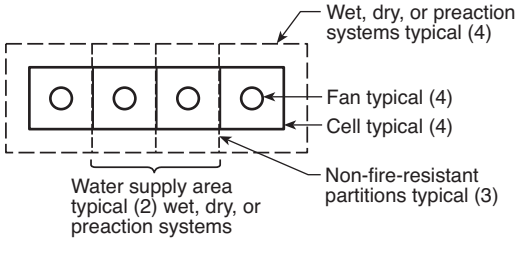

FIGURE A.22.21.1.7.2.2 Multiple Wet, Dry, or Preaction Systems with No Fire-Resistant Partitions. [214:Figure A.5.6.2.2]

A.22.21.2.1 See Figure A.22.21.2.1(a) through Figure A.22.21.2.1(d).

Copyright 2014 National Fire Protection Association (NFPA). Licensed, by agreement, for individual use and download on October 4, 2014 to LEADER and READER for designated user PATTARAPORN SRITRAKOOL. No other reproduction or transmission in any form permitted without written permission of NFPA. For inquires or to report unauthorized use, contact licensing@nfpa.org.

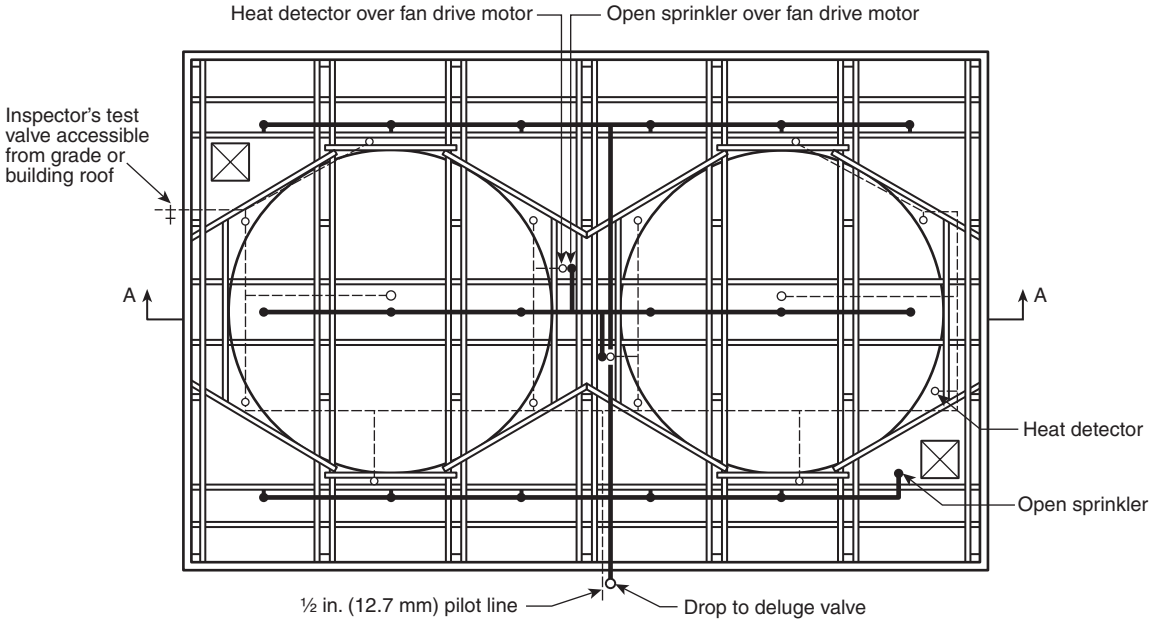

FIGURE A.22.21.2.1(a) Plan View, Typical Deluge Fire Protection Arrangement for Counterflow Towers. [214:Figure A.5.2.4.1(a)]

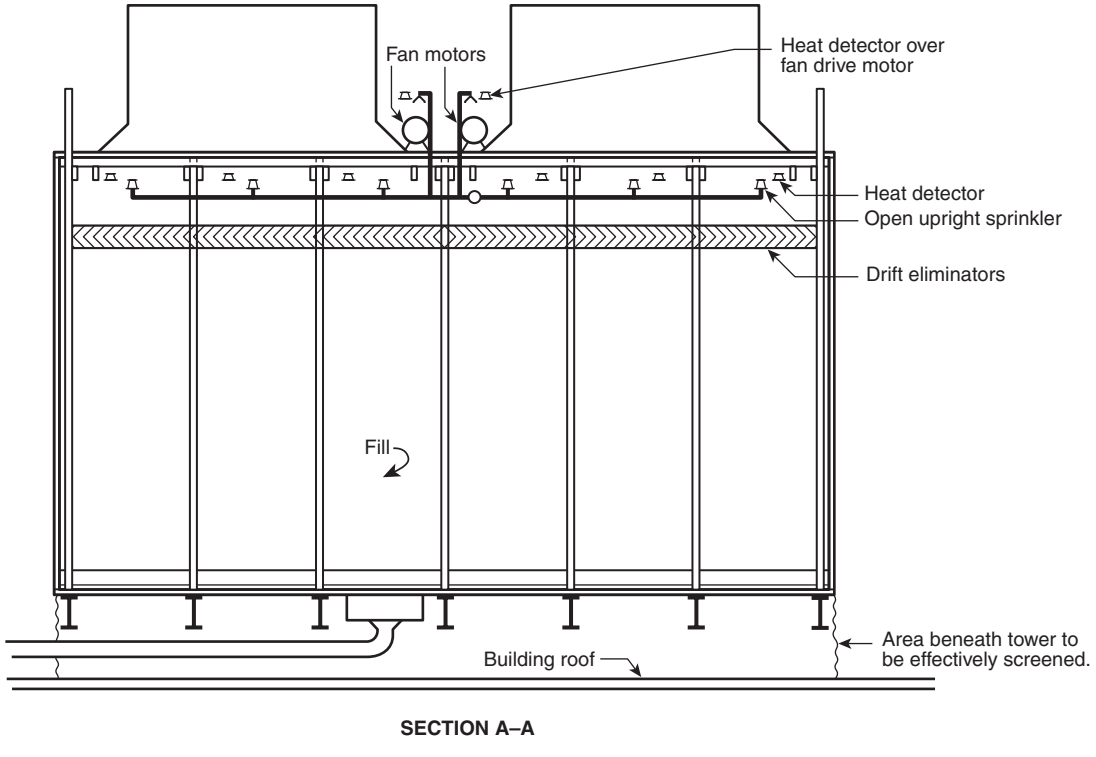

FIGURE A.22.21.2.1(b) Section View, Typical Deluge Fire Protection Arrangement for Counterflow Towers. [214:Figure A.5.2.4.1(b)]

Copyright 2014 National Fire Protection Association (NFPA). Licensed, by agreement, for individual use and download on October 4, 2014 to LEADER and READER for designated user PATTARAPORN SRITRAKOOL. No other reproduction or transmission in any form permitted without written permission of NFPA. For inquires or to report unauthorized use, contact licensing@nfpa.org.

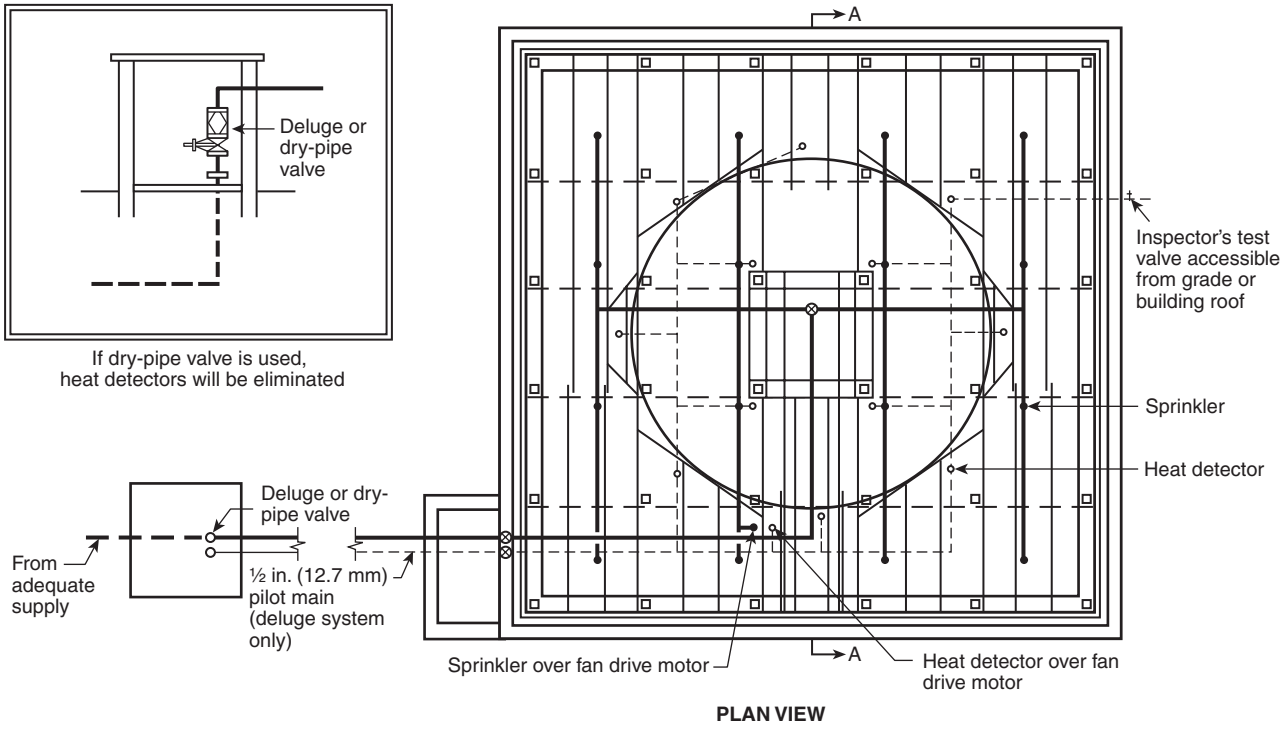

FIGURE A.22.21.2.1(c) Plan View, Typical Deluge or Dry Pipe Fire Protection Arrangement for Counterflow Towers. [214:Figure A.5.2.4.1(c)]

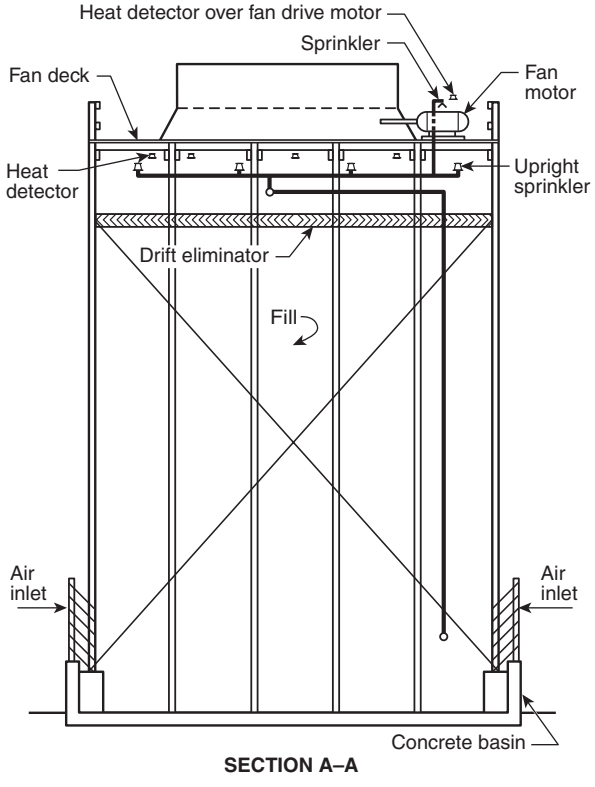

FIGURE A.22.21.2.1(d) Section View, Typical Deluge or Dry Pipe Fire Protection Arrangement for Counterflow Towers. [214:Figure A.5.2.4.1(d)]

A.22.21.2.2 See Figure A.22.21.2.2(a) through Figure A.22.21.2.2(d).

A.22.21.2.3 Location of the nozzle relative to surfaces to be protected should be determined by the particular nozzle's discharge characteristics. Care should also be taken in the selection of nozzles to obtain waterways not easily obstructed by debris, sediment, sand, and so forth, in the water. *[See Figure A.22.21.2.3(a) and Figure A.22.21.2.3(b).]* [**214:** A.5.2.4.3]

A.22.21.2.5 See Figure A.22.21.2.5.

A.22.21.2.10.2 Approved discharge devices are made of nonferrous material and are corrosion-resistant to normal atmospheres. Some atmospheres require special coatings on the discharge devices. [**214:** A.5.3.2]

A.22.21.2.10.3 Corrosion attacks the exposed metal and, in time, creeps under the wax coating. [**214:** A.5.3.3]

A.22.22.1.1 Group A plastics represent the most challenging commodities that can be protected by a sprinkler system designed in accordance with this standard. Due to the widely varying nature of commodities that pass through transit sheds, container freight stations, transload facilities, and similar buildings used for handling and temporary storage of general cargo, a minimum automatic sprinkler design based upon the protection of Group A plastic commodity under the provisions of NFPA 13 provides an appropriate level of fire protection. [**307:** A.5.4.2.1]

A.22.22.2.1.2.1 Examples of sprinklers that project water upward are pendent sprinklers installed in an upright position or old-style sprinklers. [**307:** A.4.3.3.1.3.1]

A.22.22.2.1.2.1(B)(3) An example of crisscross construction (ties on stringers) is illustrated in Figure B.1(a) of NFPA 307. [**307:** A.4.3.3.1.3.1(B)(3)]

Copyright 2014 National Fire Protection Association (NFPA). Licensed, by agreement, for individual use and download on October 4, 2014 to LEADER and READER for designated user PATTARAPORN SRITRAKOOL. No other reproduction or transmission in any form permitted without written permission of NFPA. For inquires or to report unauthorized use, contact licensing@nfpa.org.

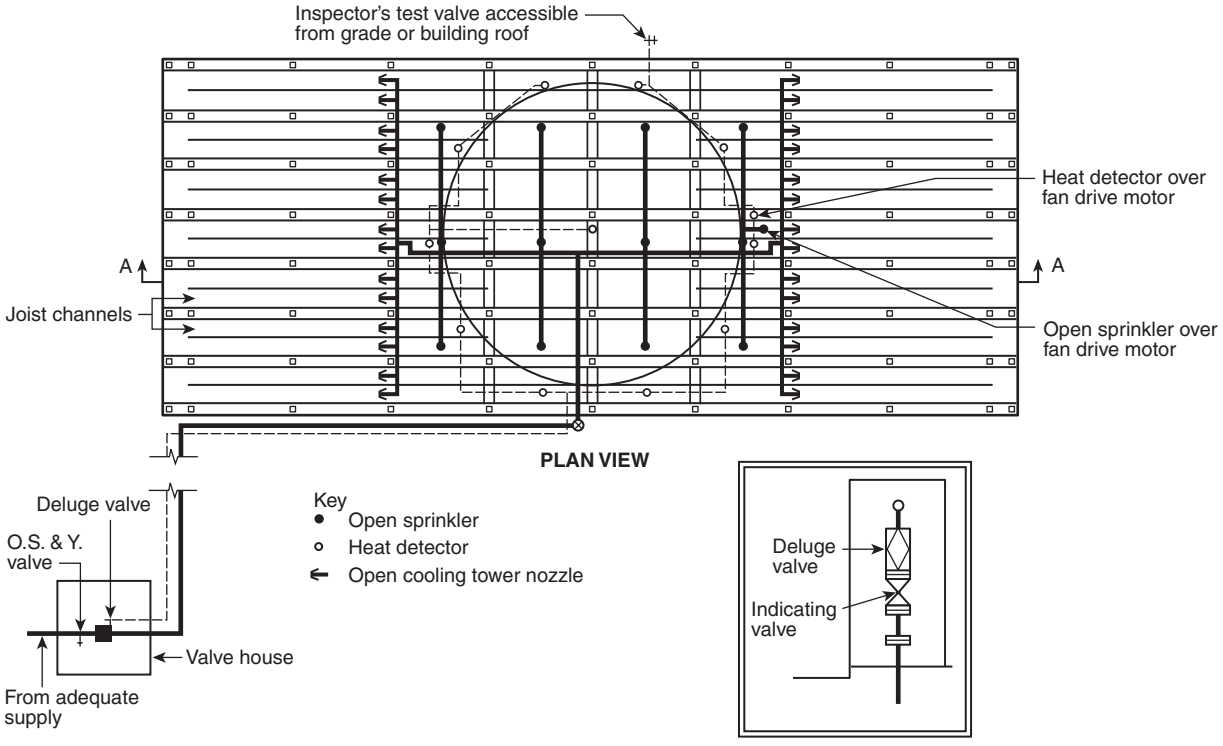

FIGURE A.22.21.2.2(a) Plan View, Typical Deluge Fire Protection Arrangement for Crossflow Towers. [214:Figure A.5.2.4.2(a)]

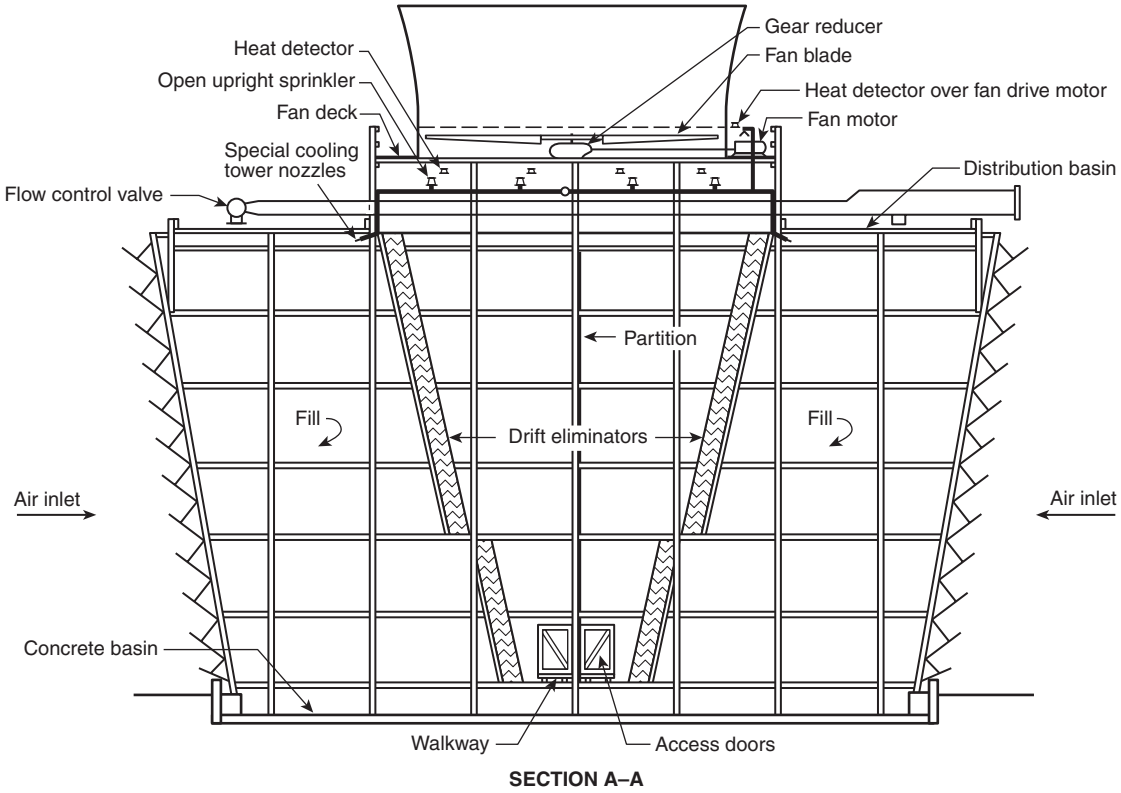

FIGURE A.22.21.2.2(b) Section View, Typical Deluge Fire Protection Arrangement for Crossflow Towers. [214:Figure A.5.2.4.2(b)]

Copyright 2014 National Fire Protection Association (NFPA). Licensed, by agreement, for individual use and download on October 4, 2014 to LEADER and READER for designated user PATTARAPORN SRITRAKOOL. No other reproduction or transmission in any form permitted without written permission of NFPA. For inquires or to report unauthorized use, contact licensing@nfpa.org.

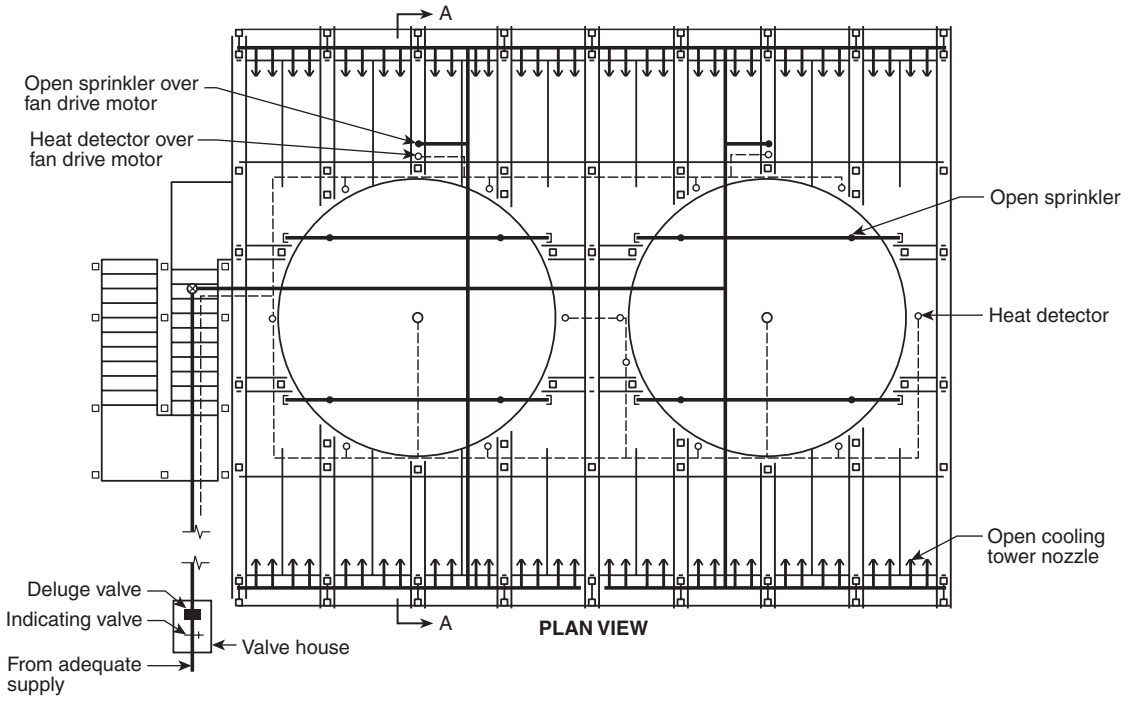

Note: Where air seal boards prevent installation of cooling tower nozzles on drift eliminator side of fill, this nozzle location should be used.

FIGURE A.22.21.2.2(c) Plan View, Typical Deluge Fire Protection Arrangement for Multicell Crossflow Towers. [214:Figure A.5.2.4.2(c)]

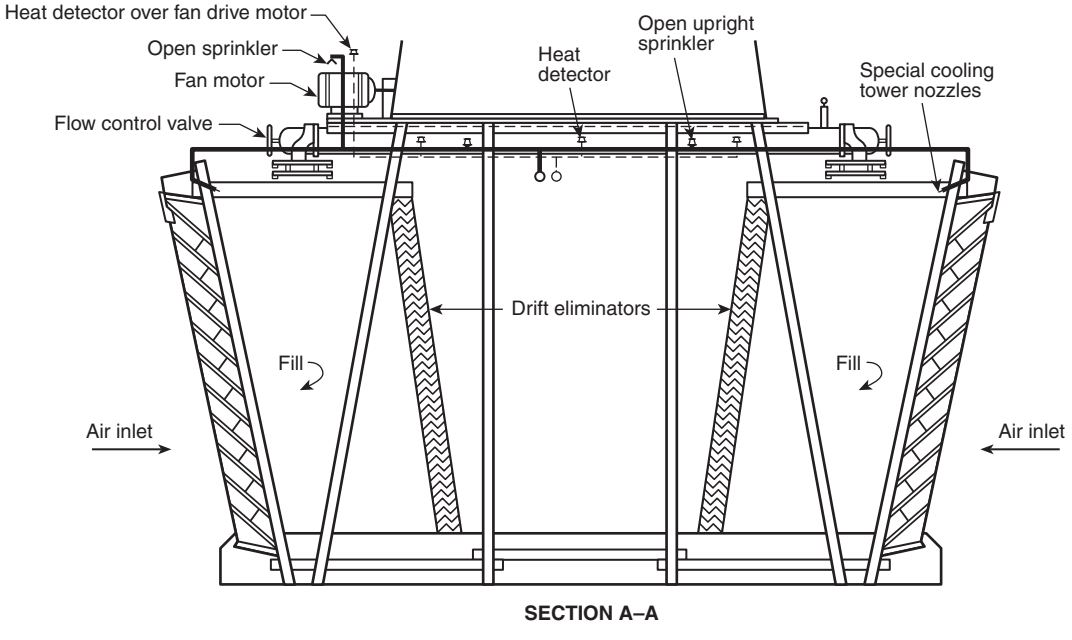

Note: Where air seal boards prevent installation of cooling tower nozzles on drift eliminator side of fill, this nozzle location should be used.

FIGURE A.22.21.2.2(d) Section View, Typical Deluge Fire Protection Arrangement for Multicell Crossflow Towers. [214:Figure A.5.2.4.2(d)]

Copyright 2014 National Fire Protection Association (NFPA). Licensed, by agreement, for individual use and download on October 4, 2014 to LEADER and READER for designated user PATTARAPORN SRITRAKOOL. No other reproduction or transmission in any form permitted without written permission of NFPA. For inquires or to report unauthorized use, contact licensing@nfpa.org.

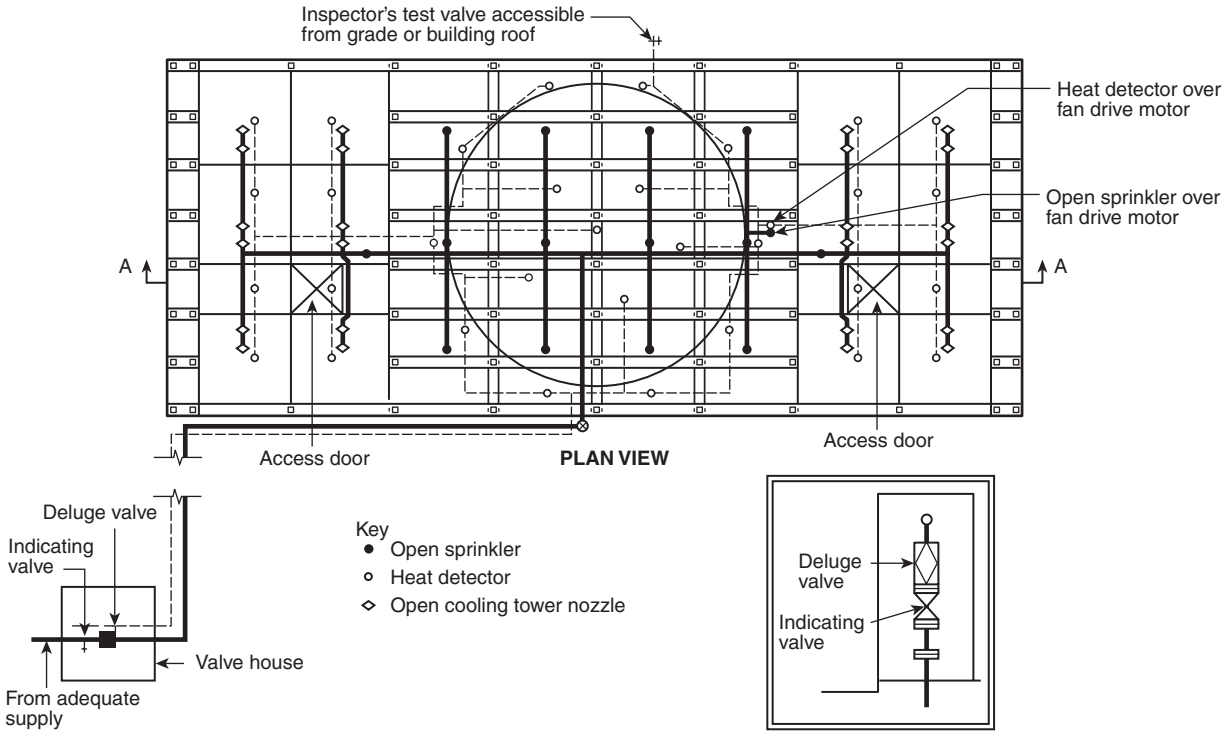

FIGURE A.22.21.2.3(a) Plan View, Typical Deluge Fire Protection Arrangement for Crossflow Towers with Completely Enclosed Distribution Basins. [214:Figure A.5.2.4.3(a)]

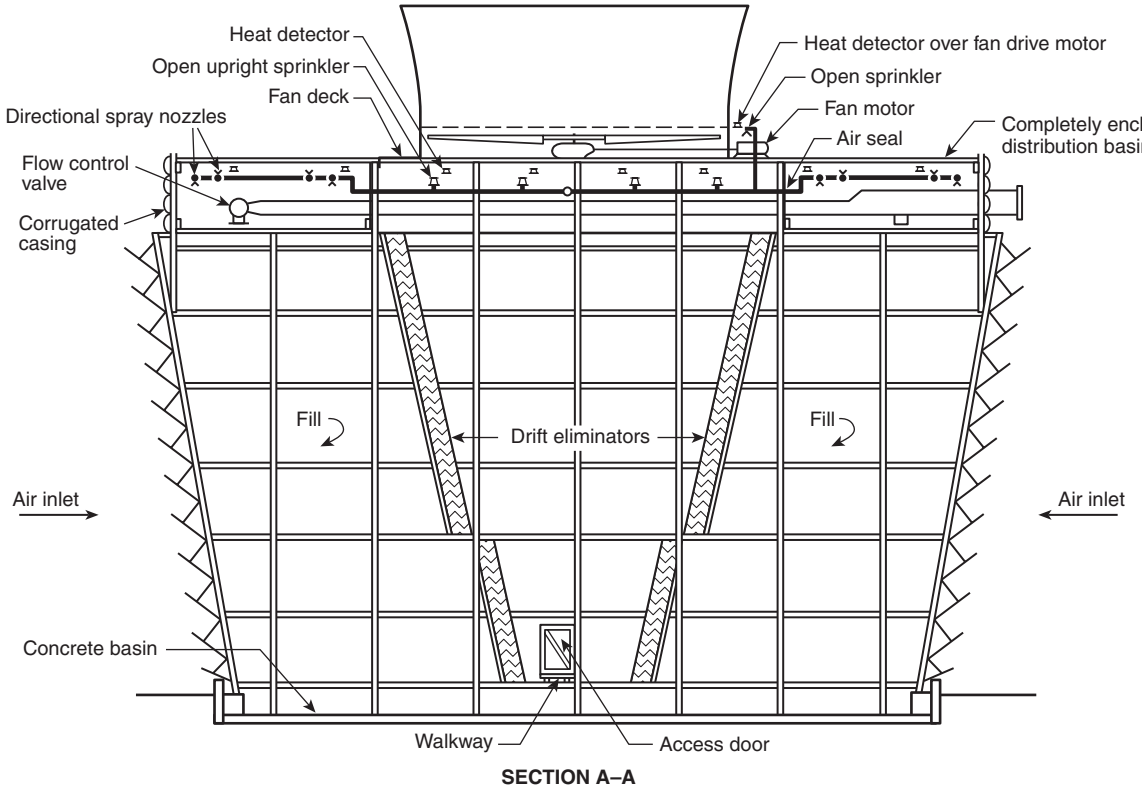

FIGURE A.22.21.2.3(b) Section View, Typical Deluge Fire Protection Arrangement for Crossflow Towers with Completely Enclosed Distribution Basins. [214:Figure A.5.2.4.3(b)]

Copyright 2014 National Fire Protection Association (NFPA). Licensed, by agreement, for individual use and download on October 4, 2014 to LEADER and READER for designated user PATTARAPORN SRITRAKOOL. No other reproduction or transmission in any form permitted without written permission of NFPA. For inquires or to report unauthorized use, contact licensing@nfpa.org.

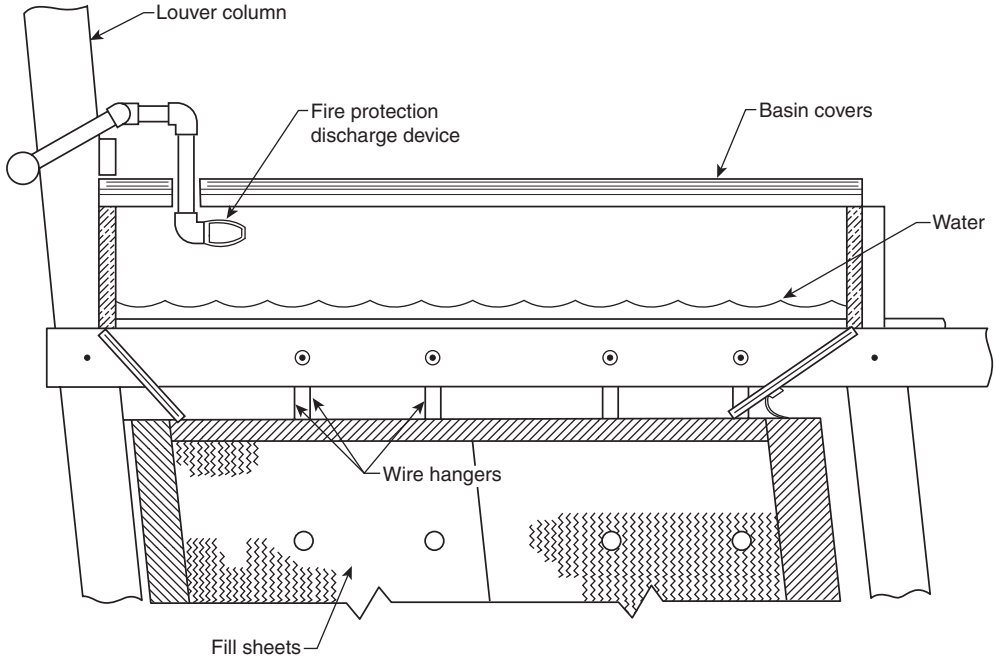

FIGURE A.22.21.2.5 Typical Deluge Fire Protection Arrangement for Crossflow Towers with Covers Completely Enclosing Distribution Basins. [214:Figure A.5.2.4.5]

A.22.22.2.1.2.1(B)(5) The use of firestops for draft control (e.g., to bank heat, facilitate the opening of sprinkler heads, and prevent the overtaxing of the sprinkler system) is particularly important in the design of sprinkler protection for combustible substructures. The fire walls and firestops of 4.3.3.4 and 4.3.3.5 of NFPA 307 should be incorporated into the sprinkler system design for draft control to the maximum extent practical; however, due to limitations in the size of the design area for the sprinkler system, additional firestops normally are needed. These additional or supplemental firestops need only have limited fire resistance, but they should be as deep as possible and be of substantial construction, such as double 3 in. (76.2 mm) planking, where exposed to the elements. Where not exposed to the possibility of physical damage, ¾ in. (19.05 mm) treated plywood extending 48 in. (1219.2 mm) below stringers with solid blocking between stringers should provide adequate durability and reasonable effectiveness. [**307:** A.4.3.3.1.3.1(B)(5)]

A.22.23.1.1 Typical configurations of cleanrooms and their chases and plenums create numerous areas that might be sheltered from sprinkler protection. These areas can include air-mixing boxes, catwalks, hoods, protruding lighting, open waffle slabs, equipment, piping, ducting, and cable trays. Care should be taken to relocate or supplement sprinkler protection to ensure that sprinkler discharge covers all parts of the occupancy. Care should also be taken to ensure that sprinklers are located where heat will be satisfactorily collected for reliable operation of the sprinkler.

Gaseous fire suppression systems are not substitutes for automatic sprinkler protection. The large number of air changes in cleanrooms can cause dilution or stratification of the gaseous agent.

It is recommended that sprinkler systems be inspected at least semiannually by a qualified inspection service. (See NFPA 25.) The length of time between such inspections can be decreased due to ambient atmosphere, water supply, or local requirements of the authority having jurisdiction.

Prior to taking a sprinkler system out of service, one should be certain to receive permission from all authorities having jurisdiction and to notify all personnel who might be affected during system shutdown. A fire watch during maintenance periods is a recommended precaution. Any sprinkler system taken out of service for any reason should be returned to service as promptly as possible.

A sprinkler system that has been activated should be thoroughly inspected for damage and its components replaced or repaired promptly. Sprinklers that did not operate but were subjected to corrosive elements of combustion or elevated temperatures should be inspected and replaced if necessary, in accordance with the minimum replacement requirements of the authority having jurisdiction. Such sprinklers should be destroyed to prevent their reuse. [**318:** A.4.1.2.1]

A.22.23.1.2.1 Examples of combustible materials that might be found in these spaces are as follows:

(1) Roof, floor, wall construction materials
(2) Unapproved HEPA or ULPA filter modules
(3) Supply air or exhaust ducts
(4) Air handler unit enclosures or air plenum boxes
(5) Exposed electrical cable or pipe insulation
(6) Plastic piping
(7) Flammable or combustible liquid piping

[**318:** A.4.1.2.5.1]

Copyright 2014 National Fire Protection Association (NFPA). Licensed, by agreement, for individual use and download on October 4, 2014 to LEADER and READER for designated user PATTARAPORN SRITRAKOOL. No other reproduction or transmission in any form permitted without written permission of NFPA. For inquires or to report unauthorized use, contact licensing@nfpa.org.

A.22.23.1.3 Small-orifice sprinklers, ⅜ in. (9.5 mm) or larger, can be used. [**318:** A.4.1.2.6.2.1]

A.22.23.1.3.1 Small-orifice sprinklers, ⅜ in. (9.5 mm) or larger, can be used. [**318:** A.4.1.2.6.2.1]

A.22.23.2.1 Automatic sprinkler systems and their water supplies should be designed for maximum reliability. In the event of any impairments of the yard main system, sprinkler system lead-in(s) connections should be capable of being isolated and protection promptly restored through valving or interconnection of automatic sprinkler systems, or both, inside the building. [**318:** A.4.1.1]

A.22.23.2.2 The use of quick-response sprinklers, while still delayed in opening by the downward airflow, would respond to a smaller-size fire more quickly than would conventional sprinklers. (Glass bulb–type quick-response sprinklers might be preferable to other types of quick-response sprinklers.) [**318:** A.4.1.2.2]

A.22.23.2.3 Small-orifice sprinklers, ⅜ in. (9.5 mm) or larger, can be used. [**318:** A.4.1.2.6.2.1]

A.22.25.1.2 The exposure to the airport terminal building from the airport ramp is significant. The number of building sprinklers operating from the exposure fire can be greater than from an internal ignition source. [**415:** A.4.5.1.5]

A.22.25.1.3 The exposure to the airport terminal building from the airport ramp is significant. The number of building sprinklers operating from the exposure fire could be greater than the number of building sprinklers operating from an internal ignition source.

A.22.26.1.1 Because of the nature of the test cell fire potential, deluge systems are considered more appropriate than automatic sprinklers due to their speed of operation and simultaneous discharge of all nozzles; however, automatic sprinklers can be used as follows:

(1) In small cells [600 ft^2 (56 m^2) or less] where it is likely that all sprinklers would fuse at the same time
(2) As a backup to a manual water spray or other manual system

[**423:** A.7.6.3]

A.22.27.1.1 The water supply for the permanent fire protection water system should be based on providing a 2-hour water supply for both items (1) and (2), as follows:

(1) Either item (a) or (b), whichever is larger:
    (a) The largest fixed fire suppression system demand
    (b) Any fixed fire suppression system demand that could be reasonably expected to operate simultaneously during a single event (e.g., turbine underfloor protection in conjunction with other fire protection systems in the turbine area)
(2) The hose stream demand of not less than 500 gpm (1892.5 L/min)

[**804:** A.9.2.1]

A.22.27.1.5 To avoid water application to hot parts or other water-sensitive areas and to provide adequate coverage, designs that incorporate items such as fusible element operated spray nozzles might be necessary. [**804:** A.10.8.2.1]

A.22.27.1.6 Additional information concerning turbine generator fire protection can be found in EPRI Research Report 1843-2,"Turbine Generator Fire Protection by Sprinkler System." [**804:** A.10.8.3]

A.22.27.2.1.2 A common yard fire main loop can serve multiunit nuclear power plant sites if it is cross-connected between units. [**804:** A.9.4.4]

A.22.30.1.1 Standard-response sprinklers employ more robust operating elements than quick-response sprinklers and can be more appropriate for use in areas where concern for inadvertent water discharge outweighs the advantages of thermal sensitivity. [**909:** A.9.12.12.2]

A.22.30.1.2 Preaction and dry pipe sprinkler systems are more subject to corrosion than standard wet pipe systems, due to the presence of both air and moisture within the pipes. In addition to causing problems which could impair the operation of the sprinkler system and possibly result in system failures, such as preventing valves from opening, restricting water flow and pressure to the sprinklers, and clogging drops and branch lines. The higher rates of corrosion can also result in sprinkler system malfunctions such as leaks that can have a significant adverse impact on sensitive collections and cultural properties. The products of corrosion (black and orange residue made up primarily of ferric and ferrous oxides and hydroxides) that collect in the piping can cause considerable damage to artwork, historic fabric, and collections upon discharge. The corrosion in the systems can also lead to leaks and piping failures, especially at joints, along the bottom of pipes between roll grooves, and other places where moisture accumulates. Based on this, additional precautions are warranted in areas with susceptible collections or historic fabric, or where sprinkler system repairs or replacement of piping would put the building or contents at an unacceptable risk. [**909:** A.9.12.12.3]

A.22.30.1.3.1 The automatic fire suppression system, the compact storage system, and the storage compartmentation features should be designed to limit fire damage in accordance with the facility's fire safety objectives (e.g., confine fire growth to the compact storage module of origin). Significant factors to consider include the number and size of the storage modules, the separation provided between the modules (end-to-end and back-to-back), and the type of materials being stored. In general, double-interlock pre-action systems and dry pipe systems are inappropriate for compact storage, because of the additional delay they introduce, coupled with the delays in activation resulting from the compact storage units themselves.

Other protection features should be considered to limit the extent of potential fire damage, including the following:

(1) Very high density sprinkler systems
(2) Quick-response sprinklers
(3) Early-warning smoke detection
(4) Spacers between carriages or, for automated systems, automatic park mode to increase flue spaces between carriages upon activation of a fire alarm or during idle periods
(5) Metal vertical barriers in the middle of the shelf
(6) Open-top shelving

[**909:** A.9.12.23.4.1.3]

A.22.30.1.3.2 The system should be designed to confine fire growth to the compact storage module of origin or the shelving range of origin. [**909:** A.9.12.23.4.1.4(A)]

Copyright 2014 National Fire Protection Association (NFPA). Licensed, by agreement, for individual use and download on October 4, 2014 to LEADER and READER for designated user PATTARAPORN SRITRAKOOL. No other reproduction or transmission in any form permitted without written permission of NFPA. For inquires or to report unauthorized use, contact licensing@nfpa.org.

A.22.30.2.1 Although prior to the 2007 edition NFPA 13 permitted the pipe for systems not subject to freezing to be installed without a back pitch, similar to the design of wet pipe systems, this arrangement allows water to accumulate in low points, increasing the rate of corrosion. Proper pitching is an important element in reducing the risk of corrosion. The pitch requirements included in NFPA 13 should be considered the minimum acceptable pitch. Where adequate clearance is provided to permit the system to be installed without causing interferences with structural elements or causing low points, pitches exceeding this minimum requirement such as 4 mm/m (½ in. per 10 ft) should be considered. [**909:** A.9.12.12.3.1]

A.22.30.2.2 Additional auxiliary drainage should be provided, in accordance with NFPA 13, regardless of whether the protected area is subject to freezing. [**909:** A.9.12.12.3.2.1]

A.22.30.2.3 The wording is based on NFPA 13, 24.1.5.2. The special sensitivity of cultural resource properties to water damage that could result from piping corrosion warrants the assumption of water supplies and environmental conditions that contribute to unusual corrosive properties. [**909:** A.9.12.12.3.3]

A.22.31.2.3 The intent of the *NFPA 70* is to allow sprinkler piping in the room protecting the space covering the floor area that includes the electrical equipment as long as the sprinklers and piping are not located in the zone described by 22.31.2.1. The sprinkler and the piping can be above the zone described by 22.31.2.1, but a shield needs to be installed in this case to protect the electrical equipment from potential leakage.

A.22.34.1.11 The quantities and pressure of water for fire extinguishing indicated in 22.34.1.11 are based on limited testing and should be considered subject to change as additional data become available. It is recommended that spray coverage tests be carried out at maximum altitude for manned operations.

A.22.35.1.1.1 See 4.3.3 of NFPA 120 for unique requirements for protecting this unusual type of occupancy.

A.22.36.1.2 Underground shaft mines that use diesel-powered equipment generally employ underground diesel fuel storage areas to facilitate equipment refueling. Adit-type mines in the western United States can initially locate diesel fuel storage and refueling facilities on the surface; however, as the active mine workings progress further from the adit portal(s), these facilities usually are moved underground.

A common means of fire protection currently found in many underground diesel fuel storage areas is a fixed water sprinkler system. The federal Mine Safety and Health Administration (MSHA) currently approves such systems for this application. The consensus of the committee is that this situation represents a significant safety hazard. According to the NFPA *Fire Protection Handbook*, water sprinklers can be used on diesel fuel for control but not for extinguishment.

"The Health and Safety Implications of the Use of Diesel-Powered Equipment in Underground Mines," a report by an interagency task group prepared for MSHA in 1985, concludes that "water spray or fog usually will not extinguish diesel fuel fires."

In an underground mine, fire control is not sufficient; fire extinguishment is essential for the following reasons:

(1) As long as a fire burns, even if it does not grow in intensity or area and appears to be responsive to fire control, toxic smoke and fire gases are produced that can endanger persons in the mine.
(2) According to the NFPA *Fire Protection Handbook*, overpressure failure of containers when exposed to fire is considered the principal hazard of closed-container flammable and combustible liquid storage.
(3) Even a "controlled" fire can cause container failure, producing a fire so intense that the sprinkler system is unable to control it, much less extinguish it.
(4) Water sprays are not effective in extinguishing pressure fires, running fuel fires, and obstructed spill fires, all of which can occur in a diesel refueling area.
(5) Water supplies are limited in many underground mines. Fire control, therefore, should be considered temporary, because the fire will grow immediately to maximum intensity when the water supply is depleted.
(6) The vapor pressure of diesel fuel increases with elevation due to reduced barometric pressure. As a result, even fuels without flash point–reducing additives can become flammable, depending on the altitude at which they are used. This reduction in flash point could result in reclassification of the diesel fuel to a Class IC flammable liquid. There is no clear consensus in the literature and industry practice as to the effectiveness of fixed water sprays in controlling and extinguishing fires involving Class IC flammable liquids. Although industry practice strongly favors fixed water sprays for such applications, the literature and available research results clearly indicate the ineffectiveness of fixed sprays on Class IC liquids, especially on pressure fires, running fuel fires, and obstructed spill fires.

Water sprinkler systems installed for the protection of diesel fuel storage areas might not be effective in suppression even though they do provide good control through cooling; foam-water systems can provide suppression. [**122:** A.11.3.1]

A.22.36.1.3.2 Although water-only deluge, foam-water, and dry chemical systems might be effective in controlling or suppressing SX facility fires, there might be use for more than one application in a given facility. Manual response has been ineffective in recent losses and automatic suppression is advised for both existing and new facilities.

While water spray can be effective, due to potentially high flow requirements a mixer-settler cell might overflow during the suppression process. This might create additional concerns with drainage and fire spread.

Foam has been shown to be an effective suppressant medium for SX fires. However, environmental aspects, potential contamination of process liquids (particularly associated with accidental system initiation), and the difficulty or inability to conduct system flow tests on a periodic basis are negative points in the selection of foam.

High pressure water mist or fog might prove to be a potentially effective suppressant medium and might not create the contamination, environmental, and testing obstacles that accompany foam or the large volumes that accompany conventional high density water deluge systems. Currently, there are no public domain tests conducted on mist systems for pool fires of the size involved in a large SX settler; thus, actual suppressability under all fire conditions has not been demonstrated. [**122:** A.13.19.1.1]

A.22.36.1.3.3 The following best practices design guidance for automatic fire suppression systems is advised:

For settler tanks or cells, use either Type 1 foam chambers or open head deluge sprinklers with foam discharge. When using foam chambers, provide a 3 percent aqueous filmforming foam (AFFF) foam discharge, in accordance with NFPA 11,

Copyright 2014 National Fire Protection Association (NFPA). Licensed, by agreement, for individual use and download on October 4, 2014 to LEADER and READER for designated user PATTARAPORN SRITRAKOOL. No other reproduction or transmission in any form permitted without written permission of NFPA. For inquires or to report unauthorized use, contact licensing@nfpa.org.

with a density of 4.1 L/min/m^2 (0.10 gpm/ft^2) over the entire settler area. When using open head deluge sprinklers, provide a 3 percent AFFF foam discharge, in accordance with NFPA 16, with a density of 6.5 L/min/m^2 (0.16 gpm/ft^2). Design for a 20-minute discharge period.

For mixers, launders, drainage sumps, and piping trenches, use open head deluge sprinklers and provide a 3 percent AFFF foam discharge, in accordance with NFPA 16, with a density of 6.5 L/min/m^2 (0.16 gpm/ft^2) and a 20-minute foam discharge period.

For the interior of tank farm vessels containing combustible or flammable liquids such as loaded organic tanks, coalescers, crud treatment tanks, and diluent tanks use a Type 1 foam chamber and provide a 3 percent automatic AFFF foam discharge, in accordance with NFPA 11, into each of the tanks with a density of 4.1 L/min/m^2 (0.10 gpm/ft^2) and a 20-minute foam discharge period.

For the exterior surfaces of tank farm equipment containing combustible or flammable liquids such as loaded organic tanks, coalescers, crud treatment tanks, diluent tanks, crud treatment filters, centrifuges, pumps, and pipe racks, provide automatic open head (water only) deluge sprinklers based on a discharge density of 10.2 L/min/m^2 (0.25 gpm/ft^2). [**122:** A.13.19.1.2]

A.22.36.1.3.4 Actuation of automatic fire suppression systems can be done using ultraviolet/infrared (UV/IR) dual spectrum detectors, heat detection cable, rate of rise heat detectors, or standard air pilot heads. High speed detection is considered advisable to suppress a solvent fire in its incipient stages. [**122:** A.13.19.1.3]

A.23.1 Preliminary plans should be submitted for review to the authority having jurisdiction prior to the development of working plans *[see Figure A.23.1(a)]*. The preliminary plans can be part of the construction documents submitted in order to obtain a building permit. However, working drawings in accordance with Section 23.1 should be submitted and approved prior to the installation of system equipment. Preliminary plans should include as much information as is required to provide a clear representation of the hazard to be protected, the system design concept, the proposed water supply configuration, and building construction information pertinent to system layout and detailing.

The owner's information certificate, shown as Figure A.23.1(b), should be used to obtain a declaration of the intended use of the occupancy to be protected.

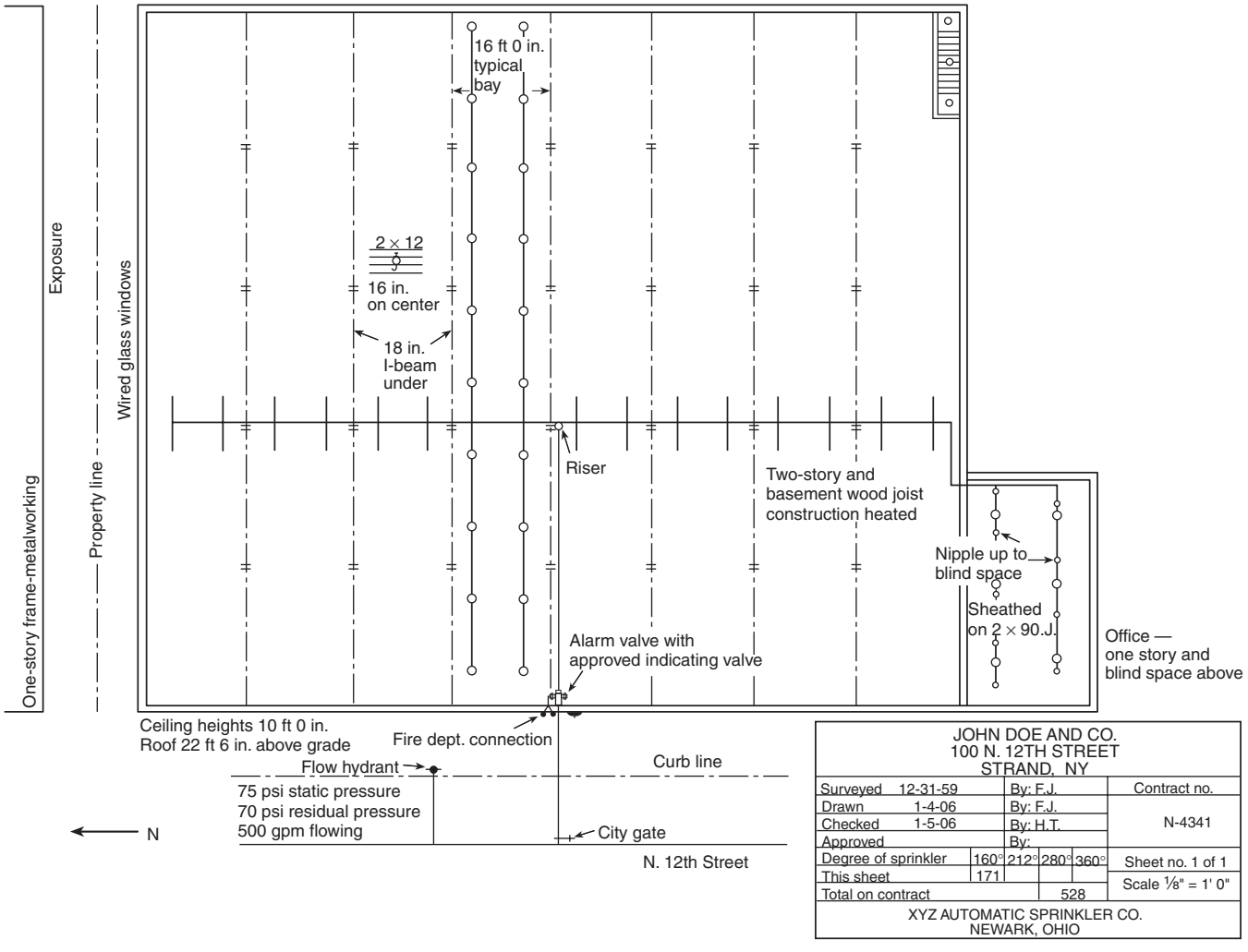

FIGURE A.23.1(a) Typical Preliminary Plan.

Copyright 2014 National Fire Protection Association (NFPA). Licensed, by agreement, for individual use and download on October 4, 2014 to LEADER and READER for designated user PATTARAPORN SRITRAKOOL. No other reproduction or transmission in any form permitted without written permission of NFPA. For inquires or to report unauthorized use, contact licensing@nfpa.org.

OWNER'S INFORMATION CERTIFICATE

Name/address of property to be protected with sprinkler protection:

_____

_____

Name of owner: _____

Existing or planned construction is:

❑ Fire resistive or noncombustible

❑ Wood frame or ordinary (masonry walls with wood beams)

❑ Unknown

Describe the intended use of the building: _____

_____

_____

Note regarding speculative buildings: The design and installation of the fire sprinkler system is dependent on an accurate description of the likely use of the building. Without specific information, assumptions will need to be made that will limit the actual use of the building. Make sure that you communicate any and all use considerations to the fire sprinkler contractor in this form and that you abide by all limitations regarding the use of the building based on the limitations of the fire sprinkler system that is eventually designed and installed.

Is the system installation intended for one of the following special occupancies:

Aircraft hangar	❑ Yes	❑ No
Fixed guideway transit system	❑ Yes	❑ No
Race track stable	❑ Yes	❑ No
Marine terminal, pier, or wharf	❑ Yes	❑ No
Airport terminal	❑ Yes	❑ No
Aircraft engine test facility	❑ Yes	❑ No
Power plant	❑ Yes	❑ No
Water-cooling tower	❑ Yes	❑ No

If the answer to any of the above is "yes," the appropriate NFPA standard should be referenced for sprinkler density/area criteria.

Indicate whether any of the following special materials are intended to be present:

Flammable or combustible liquids	❑ Yes	❑ No
Aerosol products	❑ Yes	❑ No
Nitrate film	❑ Yes	❑ No
Pyroxylin plastic	❑ Yes	❑ No
Compressed or liquefied gas cylinders	❑ Yes	❑ No
Liquid or solid oxidizers	❑ Yes	❑ No
Organic peroxide formulations	❑ Yes	❑ No
Idle pallets	❑ Yes	❑ No

If the answer to any of the above is "yes," describe type, location, arrangement, and intended maximum quantities.

_____

_____

_____

© 2012 National Fire Protection Association NFPA 13 (p. 1 of 2)

FIGURE A.23.1(b) Owner's Information Certificate.

Copyright 2014 National Fire Protection Association (NFPA). Licensed, by agreement, for individual use and download on October 4, 2014 to LEADER and READER for designated user PATTARAPORN SRITRAKOOL. No other reproduction or transmission in any form permitted without written permission of NFPA. For inquires or to report unauthorized use, contact licensing@nfpa.org.

Indicate whether the protection is intended for one of the following specialized occupancies or areas:

Spray area or mixing room	❑ Yes	❑ No
Solvent extraction	❑ Yes	❑ No
Laboratory using chemicals	❑ Yes	❑ No
Oxygen-fuel gas system for welding or cutting	❑ Yes	❑ No
Acetylene cylinder charging	❑ Yes	❑ No
Production or use of compressed or liquefied gases	❑ Yes	❑ No
Commercial cooking operation	❑ Yes	❑ No
Class A hyperbaric chamber	❑ Yes	❑ No
Cleanroom	❑ Yes	❑ No
Incinerator or waste handling system	❑ Yes	❑ No
Linen handling system	❑ Yes	❑ No
Industrial furnace	❑ Yes	❑ No
Water-cooling tower	❑ Yes	❑ No

If the answer to any of the above is "yes," describe type, location, arrangement, and intended maximum quantities.

_____

_____

Will there be any storage of products over 12 ft (3.6 m) in height? ❑ Yes ❑ No

If the answer is "yes," describe product, intended storage arrangement, and height.

_____

_____

Will there be any storage of plastic, rubber, or similar products over 5 ft (1.5 m) high except as described above? ❑ Yes ❑ No

If the answer is "yes," describe product, intended storage arrangement, and height.

_____

_____

Is there any special information concerning the water supply? ❑ Yes ❑ No

If the answer is "yes," provide the information, including known environmental conditions that might be responsible for corrosion, including microbiologically influenced corrosion (MIC).

_____

_____

I certify that I have knowledge of the intended use of the property and that the above information is correct.

Signature of owner's representative or agent: _____ Date: _____

Name of owner's representative or agent completing certificate (print): _____

Relationship and firm of agent (print): _____

© 2012 National Fire Protection Association NFPA 13 (p. 2 of 2)

FIGURE A.23.1(b) ***Continued***

Copyright 2014 National Fire Protection Association (NFPA). Licensed, by agreement, for individual use and download on October 4, 2014 to LEADER and READER for designated user PATTARAPORN SRITRAKOOL. No other reproduction or transmission in any form permitted without written permission of NFPA. For inquires or to report unauthorized use, contact licensing@nfpa.org.

Drawings that accompany the certificate should include the following:

(1) Name of owner and occupant.
(2) Location, including street address.
(3) Point of compass.
(4) Construction and occupancy of each building.
(5) Building height in feet.
(6) Waterflow test information. If a waterflow test of the city main is available, the drawings should indicate the date and time of the test, the name of the party that conducted the test, the location of the hydrants where the flow was taken and where static and residual pressure readings were recorded *(see A.24.2.2)*, the size and configuration of mains supplying the hydrants, the size and number of open hydrant butts that flood, and results of the test.
(7) Building features such as combustible concealed spaces, floor openings, areas subject to freezing, and areas from which it is intended to omit sprinkler protection.
(8) Proposed location and approximate size, if a water supply employing pumps or tanks is contemplated.
(9) Name and address of party submitting the preliminary plans.
(10) Tentative location of major piping, including mains underground, risers, overhead mains, and fire department connections.

A.23.1.1 See Figure A.23.1.1.

A.23.1.4 It is the intent to provide the owner's certificate for all new systems and where there is a change of occupancy and/or building use.

A.23.1.5 See Figure A.23.1.5(a) and Figure A.23.1.5(b).

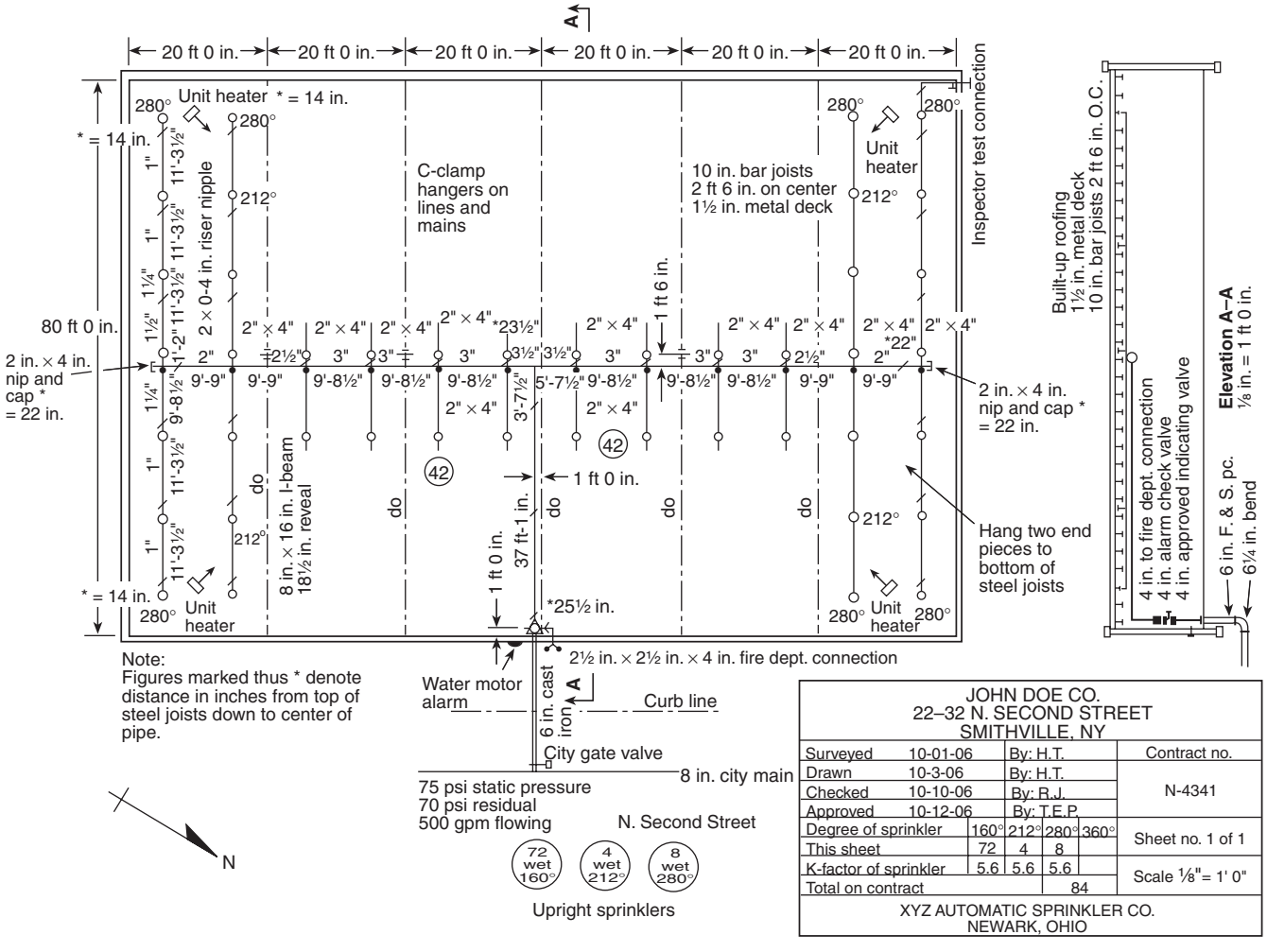

FIGURE A.23.1.1 Typical Working Plans.

Copyright 2014 National Fire Protection Association (NFPA). Licensed, by agreement, for individual use and download on October 4, 2014 to LEADER and READER for designated user PATTARAPORN SRITRAKOOL. No other reproduction or transmission in any form permitted without written permission of NFPA. For inquires or to report unauthorized use, contact licensing@nfpa.org.

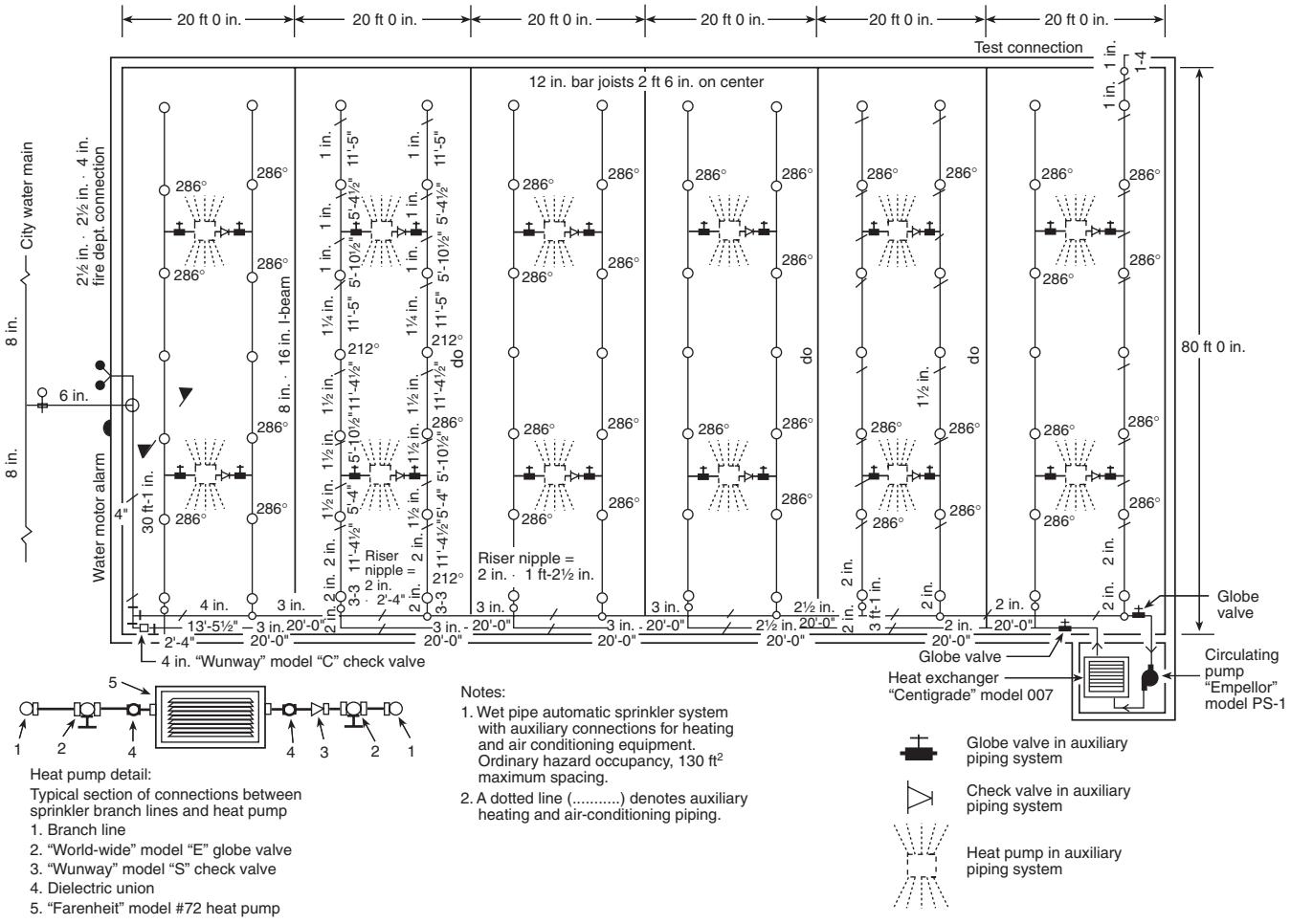

FIGURE A.23.1.5(a) Working Plans for Circulating Closed-Loop Systems (Example 1).

Copyright 2014 National Fire Protection Association (NFPA). Licensed, by agreement, for individual use and download on October 4, 2014 to LEADER and READER for designated user PATTARAPORN SRITRAKOOL. No other reproduction or transmission in any form permitted without written permission of NFPA. For inquires or to report unauthorized use, contact licensing@nfpa.org.

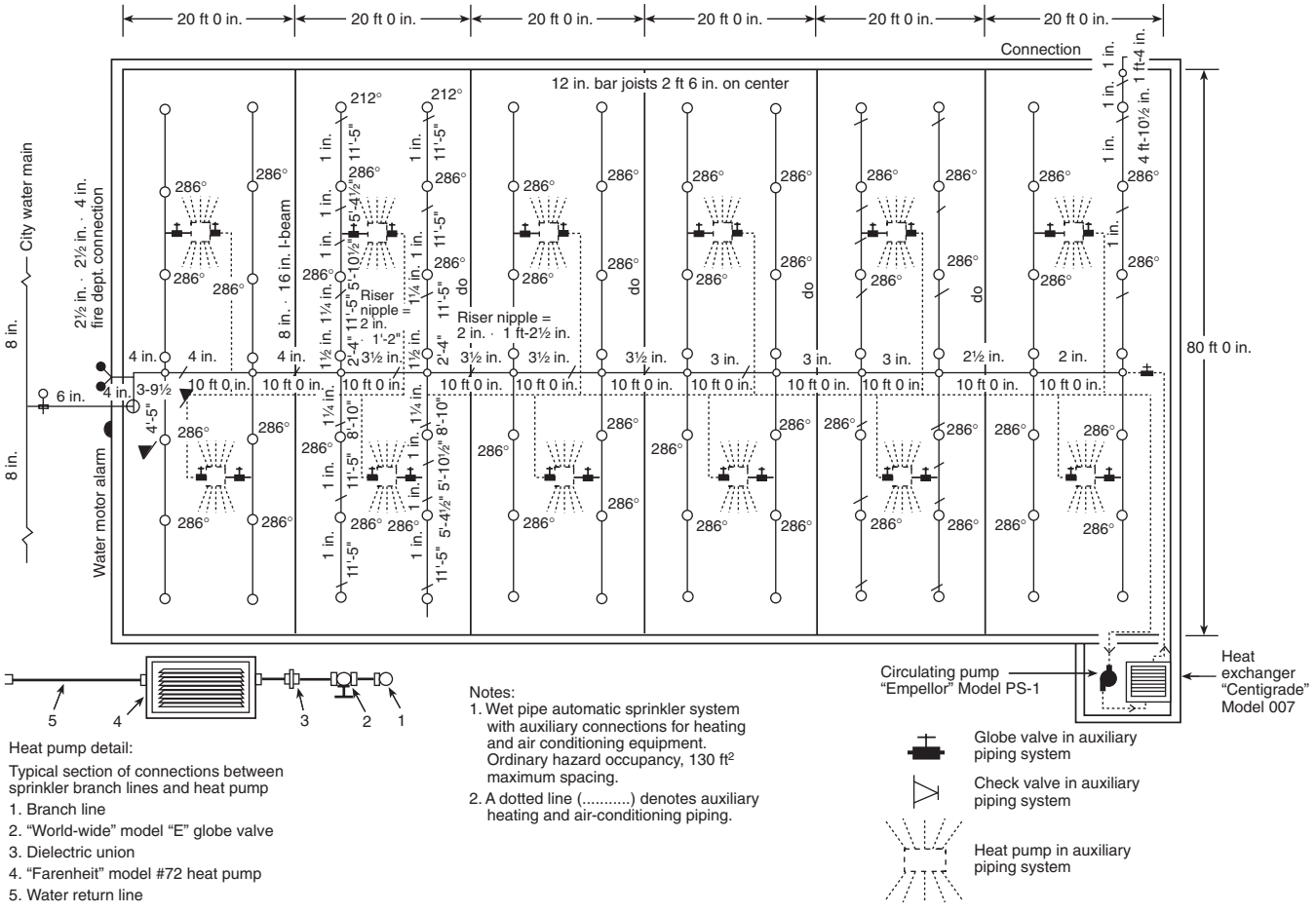

FIGURE A.23.1.5(b) Working Plans for Circulating Closed-Loop Systems (Example 2).

A.23.2.1.1 Alternative means of determining available water supplies should be considered where drought or other concerns are present.

A.23.3.2 See Figure A.23.3.2(a) through Figure A.23.3.2(d).

A.23.3.3 See Figure A.23.3.3.

A.23.3.3(15) See Figure A.23.3.3(15).

A.23.3.4 See Figure A.23.3.4.

A.23.3.5.1 Additional data can be added to any of the forms, provided that the format and order of the original information shown in Figure 23.3.5.1.2(a), Figure 23.3.5.1.2(b), Figure 23.3.5.1.2(c), and Figure 23.3.5.1.2(d) is followed.

A.23.4.1 When additional sprinkler piping is added to an existing system, the existing piping does not have to be increased in size to compensate for the additional sprinklers, provided the new work is calculated and the calculations include that portion of the existing system that can be required to carry water to the new work. It is not necessary to restrict the water velocity when determining friction losses using the Hazen–Williams formula.

Copyright 2014 National Fire Protection Association (NFPA). Licensed, by agreement, for individual use and download on October 4, 2014 to LEADER and READER for designated user PATTARAPORN SRITRAKOOL. No other reproduction or transmission in any form permitted without written permission of NFPA. For inquires or to report unauthorized use, contact licensing@nfpa.org.

Hydraulic Calculations

for

ABC Company, employee garage

7499 Franklin Road

Charleston, SC

Contract No. 4001

Date 1 – 7 – 08

Design data:

Occupancy classification ORD. GR. 1

Density 0.15 gpm/ft^2

Area of application 1500 ft^2

Coverage per sprinkler 130 ft^2

Special sprinklers

No. of sprinklers calculated 12

In-rack demand

Hose streams 250 gpm

Total water required 510.4 gpm
including hose streams

Name of contractor

Name of designer

Address

Authority having jurisdiction

FIGURE A.23.3.2(a) Summary Sheet.

A.23.4.4 See Figure A.23.4.4.

A.23.4.4.1 See Figure A.23.4.4.1(a) and Figure A.23.4.4.1(b).

A.23.4.4.1.1.1 The word "rectangular" in this section is not meant to imply that the design area always has to be a rectangle. Instead, the intent is to require a design area with sides that meet at right angles and the longer side parallel to the branch lines. In many cases, this will be a perfect rectangle with four sides. However, in some cases with multiple sprinklers on multiple branch lines within the design area, the design area can be satisfied with fewer sprinklers on the last branch line than on the first, resulting in a design area that is a rectangle with the corner cut out as shown in Figure A.23.4.4.1.1.1.

A.23.4.4.1.1.4 The following steps outline the procedure for calculation in accordance with 23.4.4.1.1.4:

(1) Calculate the hydraulic design discharge including those sprinklers within the available floor area.
(2) Calculate the minimum required discharge by multiplying the required design density times the required minimum design area.
(3) Subtract the discharge calculated in Step 1 from the discharge calculate in Step 2.
(4) Where the discharge calculated in Step 3 is greater than 0, the hydraulic design discharge is recalculated including an additional flow equal to that calculated in Step 3. The additional flow is added at the point of connection of the branch line to the cross main furthest from the source.
(5) Where the discharge calculated in Step 3 is less than or equal to 0, the hydraulic design discharge is as calculated in Step 1.

A.23.4.4.4 See Figure A.23.4.4.4.

A.23.4.4.5.1 When listed with antifreeze solution, sprinklers should be hydraulically calculated in accordance with the listing and manufacturer's instructions.

A.23.4.4.5.2 See Figure A.23.4.4.5.2.

A.23.4.4.5.5 Where the slope is parallel with the branch lines, the area per sprinkler for hydraulic calculation purposes would be found as

$$A_s = S' \times L$$

where:
S' = $(\cos \theta) S$
θ = angle of slope
S = distance between sprinklers on branch line per 8.5.2.1.2

See Figure A.23.4.4.5.5.

A.23.4.4.6 When it is not obvious by comparison that the design selected is the hydraulically most remote, additional calculations should be submitted. The most distant area is not necessarily the hydraulically most remote.

Copyright 2014 National Fire Protection Association (NFPA). Licensed, by agreement, for individual use and download on October 4, 2014 to LEADER and READER for designated user PATTARAPORN SRITRAKOOL. No other reproduction or transmission in any form permitted without written permission of NFPA. For inquires or to report unauthorized use, contact licensing@nfpa.org.

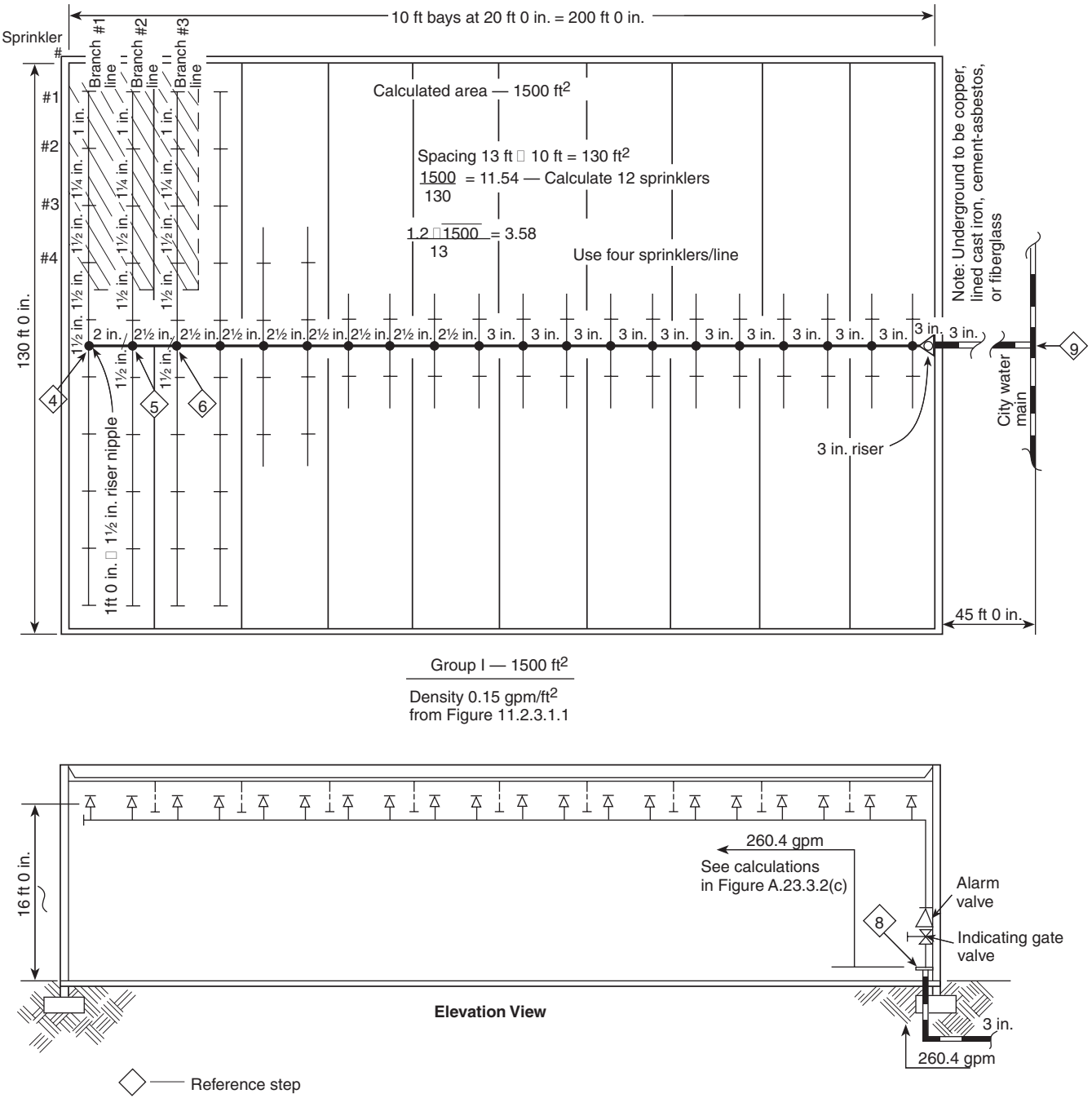

FIGURE A.23.3.2(b) Hydraulic Calculation Example (Plan View and Elevation View).

Copyright 2014 National Fire Protection Association (NFPA). Licensed, by agreement, for individual use and download on October 4, 2014 to LEADER and READER for designated user PATTARAPORN SRITRAKOOL. No other reproduction or transmission in any form permitted without written permission of NFPA. For inquires or to report unauthorized use, contact licensing@nfpa.org.

Contract Name GROUP I 1500 ft² Sheet 2 Of 3

Step No.	Nozzle Ident. and Location	Flow in gpm	Pipe Size	Pipe Fittings and Devices	Equiv. Pipe Length	Friction Loss psi Foot	Pressure Summary	Normal Pressure	D = 0.15 gpm/ft² Notes K = 5.6	Ref. Step
1	1 BL-1	q Q 19.5	1		L 13.0 F T 13.0	C=120 0.124	P_t 12.1 P_e P_f 1.6	P_t P_v P_n	Q = 130 x 0.15 = 19.5 P = (19.5/5.6)² = 12.1 psi	
2	2	q 20.7 Q 40.2	1 1/4		L 13.0 F T 13.0	0.125	P_t 13.7 P_e P_f 1.6	P_t P_v P_n	q = 5.6 $\sqrt{13.7}$	
3	3	q 21.9 Q 62.1	1 1/2		L 13.0 F T 13.0	0.131	P_t 15.3 P_e P_f 1.7	P_t P_v P_n	q = 5.6 $\sqrt{15.3}$	4
4	4 DN RN	q 23.1 Q 85.2	1 1/2	2T-16	L 20.5 F 16.0 T 36.5	0.236	P_t 17.0 P_e 0.4 P_f 8.6	P_t P_v P_n	q = 5.6 $\sqrt{17}$ P_e = 1 x 0.433	5
5	CM TO BL-2	q Q 85.2	2		L 10.0 F T 10.0	0.07	P_t 26.0 P_e P_f 0.7	P_t P_v P_n	K = 85.2 / $\sqrt{26}$ K = 16.71	
6	BL-2 CM TO BL-3	q 86.3 Q 171.5	2 1/2		L 10.0 F T 10.0	0.107	P_t 26.7 P_e P_f 1.1	P_t P_v P_n	q = 16.71 $\sqrt{26.7}$	6
7	BL-3 CM	q 88.1 Q 259.6	2 1/2		L 70.0 F T 70.0	0.231	P_t 27.8 P_e P_f 16.2	P_t P_v P_n	q = 16.7 $\sqrt{27.8}$	
8	CM TO FIS	q Q 259.6	3	E5 AV15 GV1	L 119.0 F 21 T 140.0	0.081	P_t 44.0 P_e 6.5 P_f 11.2	P_t P_v P_n	P_e = 15 x 0.433	8
9	THROUGH UNDER-GROUND TO CITY MAIN	q Q 259.6	3	E5 GV1 T15	L 50.0 F 27.6 T 77.6	C=150 TYPE'M' 0.061	P_t 61.7 P_e P_f 4.7	P_t P_v P_n	F = F_{40} x 1.51 x F_c F_c = [2.981/3.068]^4.87 = 0.869 F = 21 x 1.51 x 0.869 F = 27.6	9
		q Q			L F T		P_t 66.4 P_e P_f	P_t P_v P_n		
		q Q			L F T		P_t P_e P_f	P_t P_v P_n		
							P_t			

FIGURE A.23.3.2(c) Hydraulic Calculations.

Copyright 2014 National Fire Protection Association (NFPA). Licensed, by agreement, for individual use and download on October 4, 2014 to LEADER and READER for designated user PATTARAPORN SRITRAKOOL. No other reproduction or transmission in any form permitted without written permission of NFPA. For inquires or to report unauthorized use, contact licensing@nfpa.org.

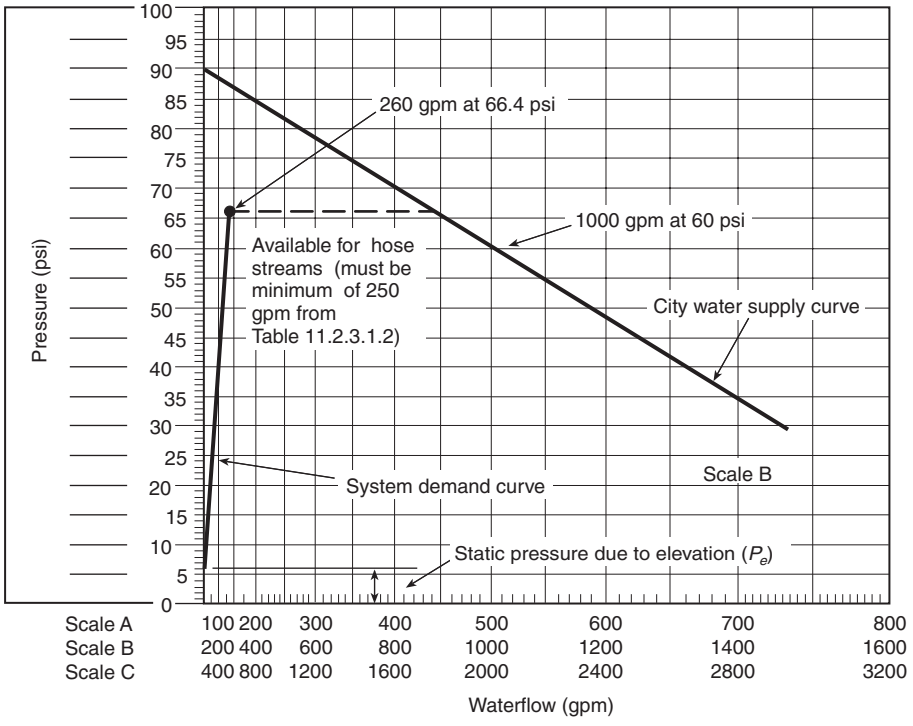

FIGURE A.23.3.2(d) Hydraulic Graph.

A.23.4.4.6.2 The intent of this section is not to allow the omission of discharge from sprinklers in small rooms where the design area has been reduced below the values in Table 23.4.4.6.2 for situations such as quick-response sprinklers. Where quick-response sprinklers are used, the discharge from sprinklers in small rooms in the design area can be omitted as long as the design area meets the size required by Table 23.4.4.6.2.

A.23.4.4.7.2 See Figure A.23.4.4.7.2 for a Moody diagram and Table A.23.4.4.7.2 for ε-factors that correspond to Hazen–Williams *C* factors. The corresponding Hazen-Williams *C* factor should be used for the calculation of equivalent pipe length in accordance with 23.4.3.

A.23.4.4.8 The use of sprinklers with differing K-factors in situations where different protection areas are needed is not considered balancing. An example would be a room that could be protected with sprinklers having different orifice sizes in closets, foyers, and room areas. However, this procedure introduces difficulties when restoring a system to service after operation since it is not always clear which sprinklers go where.

A.23.4.4.9 Where the normal pressure (P_n) is used to calculate the flow from an orifice, the following assumptions should be used:

(1) At any flowing outlet along a pipe, except the end outlet, only the normal pressure (P_n) can act on the outlet. At the end outlet, the total pressure (P_t) can act. The following should be considered end outlets:
   (a) The last flowing sprinkler on a dead-end branch line
   (b) The last flowing branch line on a dead-end cross main
   (c) Any sprinkler where a flow split occurs on a gridded branch line
   (d) Any branch line where a flow split occurs on a looped system
(2) At any flowing outlet along a pipe, except the end outlet, the pressure acting to cause flow from the outlet is equal to the total pressure (P_t) minus the velocity pressure (P_v) on the upstream (supply) side.
(3) To find the normal pressure (P_n) at any flowing outlet, except the end outlet, assume a flow from the outlet in question and determine the velocity pressure (P_v) for the total flow on the upstream side. Because normal pressure (P_n) equals total pressure (P_t) minus velocity pressure (P_v), the value of the normal pressure (P_n) so found should result in an outlet flow approximately equal to the assumed flow; if not, a new value should be assumed, and the calculations should be repeated.

A.23.5.1 The demonstrated effectiveness of pipe schedule systems is limited to their use with ½ in. (13 mm) orifice sprinklers. The use of other size orifices can require hydraulic calculations to prove their ability to deliver the required amount of water within the available water supply.

A.23.5.1.4 Where the construction or conditions introduce unusually long runs of pipe or many angles in risers or feed or cross mains, an increase in pipe size over that called for in the schedules can be required to compensate for increased friction losses.

A.23.5.2.6 For example, a 2½ in. (64 mm) steel pipe, which is permitted to supply 30 sprinklers, can supply a total of 50 sprinklers where not more than 30 sprinklers are above or below a ceiling.

Copyright 2014 National Fire Protection Association (NFPA). Licensed, by agreement, for individual use and download on October 4, 2014 to LEADER and READER for designated user PATTARAPORN SRITRAKOOL. No other reproduction or transmission in any form permitted without written permission of NFPA. For inquires or to report unauthorized use, contact licensing@nfpa.org.

Contract no. _____ Sheet no. _____ of _____

Name and location _____

Reference	Nozzle type and location	Flow in gpm (L/min)	Pipe size (in.)	Fitting and devices	Pipe equivalent length	Friction loss psi/ft (bar/m)	Required psi (bar)	Normal Pressure	Notes
		q			length		P_t	P_t	
					fitting		P_f	P_v	
		Q			total		P_e	P_n	
		q			length		P_t	P_t	
					fitting		P_f	P_v	
		Q			total		P_e	P_n	
		q			length		P_t	P_t	
					fitting		P_f	P_v	
		Q			total		P_e	P_n	
		q			length		P_t	P_t	
					fitting		P_f	P_v	
		Q			total		P_e	P_n	
		q			length		P_t	P_t	
					fitting		P_f	P_v	
		Q			total		P_e	P_n	
		q			length		P_t	P_t	
					fitting		P_f	P_v	
		Q			total		P_e	P_n	
		q			length		P_t	P_t	
					fitting		P_f	P_v	
		Q			total		P_e	P_n	
		q			length		P_t	P_t	
					fitting		P_f	P_v	
		Q			total		P_e	P_n	
		q			length		P_t	P_t	
					fitting		P_f	P_v	
		Q			total		P_e	P_n	
		q			length		P_t	P_t	
					fitting		P_f	P_v	
		Q			total		P_e	P_n	
		q			length		P_t	P_t	
					fitting		P_f	P_v	
		Q			total		P_e	P_n	
		q			length		P_t	P_t	
					fitting		P_f	P_v	
		Q			total		P_e	P_n	
		q			length		P_t	P_t	
					fitting		P_f	P_v	
		Q			total		P_e	P_n	
		q			length		P_t	P_t	
					fitting		P_f	P_v	
		Q			total		P_e	P_n	
		q			length		P_t	P_t	
					fitting		P_f	P_v	
		Q			total		P_e	P_n	
		q			length		P_t	P_t	
					fitting		P_f	P_v	
		Q			total		P_e	P_n	
		q			length		P_t	P_t	
					fitting		P_f	P_v	
		Q			total		P_e	P_n	
		q			length		P_t	P_t	
					fitting		P_f	P_v	
		Q			total		P_e	P_n	
		q			length		P_t	P_t	
					fitting		P_f	P_v	
		Q			total		P_e	P_n	

P_t: total pressure. P_f: friction loss pressure. P_v: velocity pressure. P_e: elevation pressure.

© 2012 National Fire Protection Association NFPA 13

FIGURE A.23.3.3 Sample Worksheet.

Copyright 2014 National Fire Protection Association (NFPA). Licensed, by agreement, for individual use and download on October 4, 2014 to LEADER and READER for designated user PATTARAPORN SRITRAKOOL. No other reproduction or transmission in any form permitted without written permission of NFPA. For inquires or to report unauthorized use, contact licensing@nfpa.org.

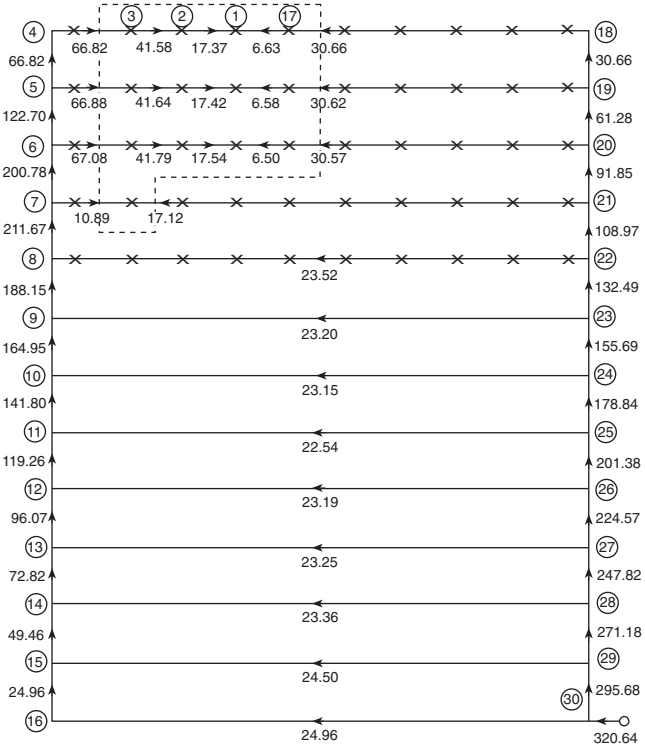

FIGURE A.23.3.3(15) Example of Hydraulically Remote Area — Grid System.

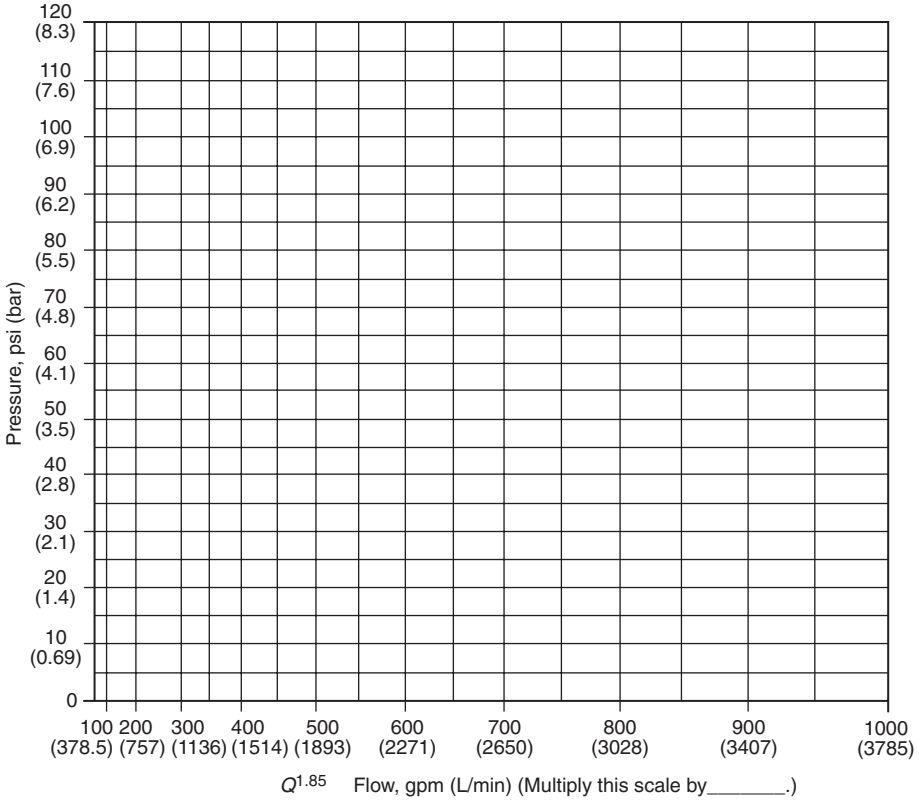

FIGURE A.23.3.4 Sample Graph Sheet.

Copyright 2014 National Fire Protection Association (NFPA). Licensed, by agreement, for individual use and download on October 4, 2014 to LEADER and READER for designated user PATTARAPORN SRITRAKOOL. No other reproduction or transmission in any form permitted without written permission of NFPA. For inquires or to report unauthorized use, contact licensing@nfpa.org.

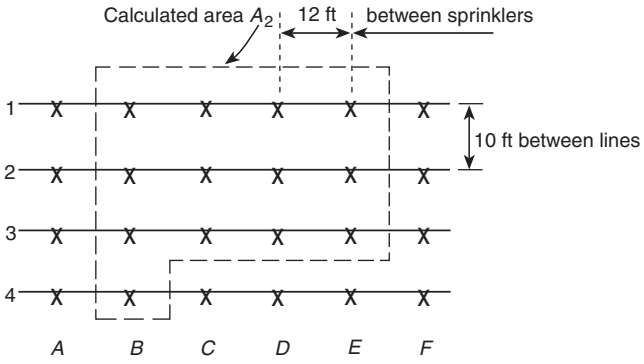

Notes:

1. For gridded systems, the extra sprinkler (or sprinklers) on branch line 4 can be placed in any adjacent location from *B* to *E* at the designer's option.
2. For tree and looped systems, the extra sprinkler on line 4 should be placed closest to the cross main.

Assume a remote area of 1500 ft^2 with sprinkler coverage of 120 ft^2

$$\text{Total sprinklers to calculate} = \frac{\text{Design area}}{\text{Area per sprinkler}}$$

$$= \frac{1500}{120} = 12.5, \text{ calculate } 13$$

$$\text{Number of sprinklers on branch line} = \frac{1.2\sqrt{A}}{S}$$

Where:
A = design area
S = distance between sprinklers on branch line

$$\text{Number of sprinklers on branch line} = \frac{1.2\sqrt{1500}}{12} = 3.87$$

For SI units, 1 ft = 0.3048 m; 1 ft^2 = 0.0929 m^2.

FIGURE A.23.4.4 Example of Determining the Number of Sprinklers to Be Calculated.

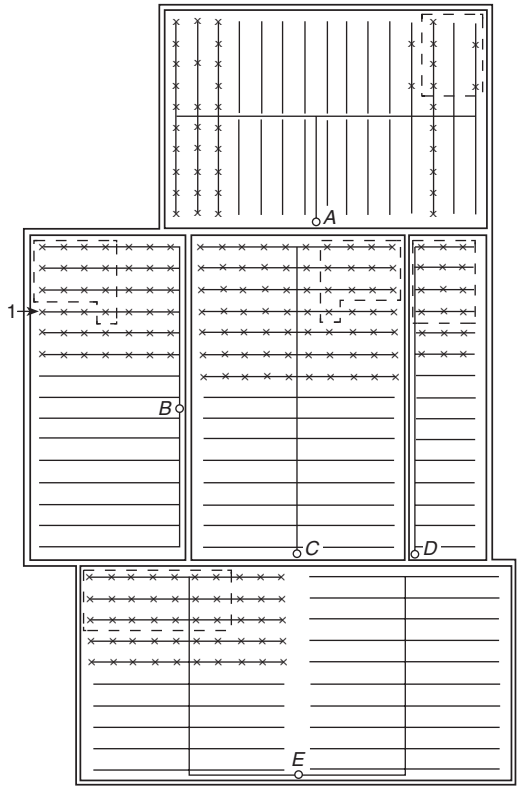

1 This sprinkler is not in the selected area of operation.

FIGURE A.23.4.4.1(a) Example of Hydraulically Most Demanding Area.

Copyright 2014 National Fire Protection Association (NFPA). Licensed, by agreement, for individual use and download on October 4, 2014 to LEADER and READER for designated user PATTARAPORN SRITRAKOOL. No other reproduction or transmission in any form permitted without written permission of NFPA. For inquires or to report unauthorized use, contact licensing@nfpa.org.

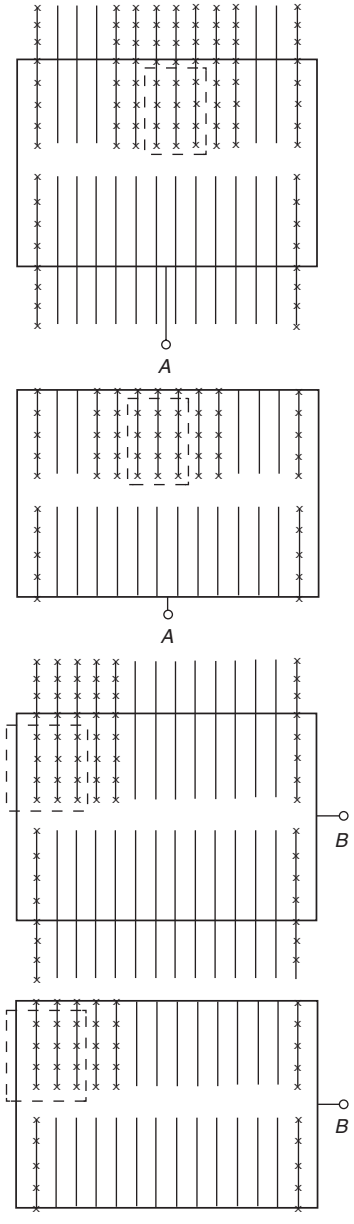

FIGURE A.23.4.4.1(b) Example of Hydraulically Most Demanding Area for Various Piping Arrangements.

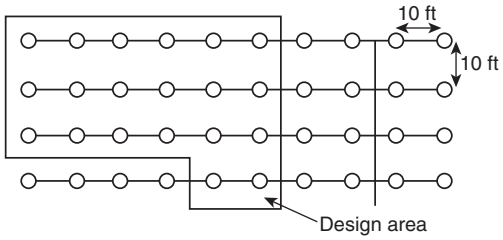

Discharge criteria: 0.45 gpm²/2000 ft²

20 sprinklers in design area 1.2(2000)0.5/10 = 5.3 rounded up to 6 sprinklers per branch line

Note that the design area is not a perfect rectangle. The 2000 ft² requirement can be met with fewer sprinklers on the fourth branch line back, so there is no need to include the additional four sprinklers on the fourth branch line.

FIGURE A.23.4.4.1.1.1 Example of Nonsymmetrical Hydraulically Most Demanding Area.

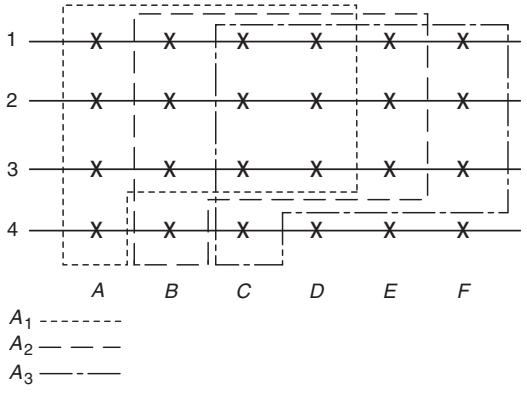

FIGURE A.23.4.4.4 Example of Determining the Most Remote Area for Gridded System.

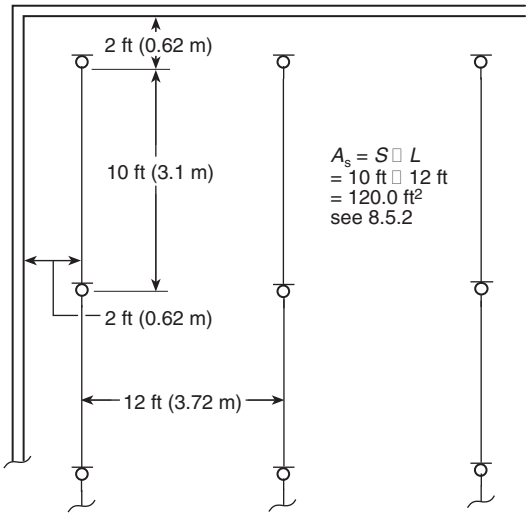

FIGURE A.23.4.4.5.2 Sprinkler Spacing.

Copyright 2014 National Fire Protection Association (NFPA). Licensed, by agreement, for individual use and download on October 4, 2014 to LEADER and READER for designated user PATTARAPORN SRITRAKOOL. No other reproduction or transmission in any form permitted without written permission of NFPA. For inquires or to report unauthorized use, contact licensing@nfpa.org.

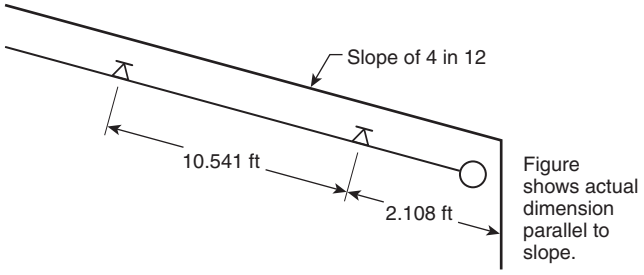

Calculation floor area = 10 ft × 12 ft (See Figure A.23.4.4.5.3)

FIGURE A.23.4.4.5.5 Determination of Floor Area Under Sloped Ceiling/Roof.

Table A.23.4.4.7.2 Suggested ε-Factor for Aged Pipe

Pipe	Hazen–Williams *C* Factor	ε-Factor (in.)
Steel (new)	143	0.0018
Steel	120	0.004
Steel	100	0.015
Copper	150	0.000084
Plastic	150	0.000084

For SI units, 1 in. = 25.4 mm.

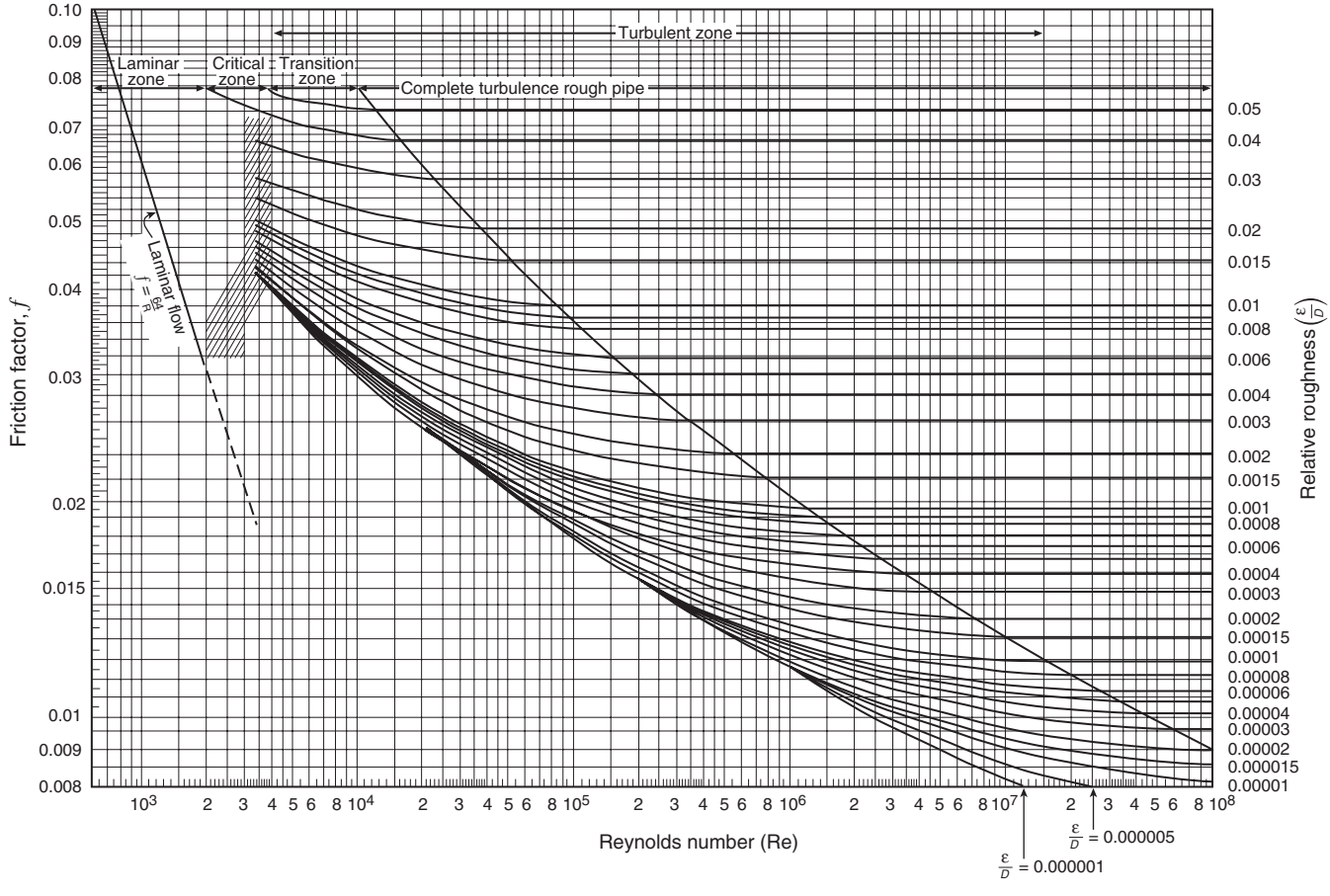

FIGURE A.23.4.4.7.2 Moody Diagram.

Copyright 2014 National Fire Protection Association (NFPA). Licensed, by agreement, for individual use and download on October 4, 2014 to LEADER and READER for designated user PATTARAPORN SRITRAKOOL. No other reproduction or transmission in any form permitted without written permission of NFPA. For inquires or to report unauthorized use, contact licensing@nfpa.org.

A.23.5.3.9 For example, a 3 in. (76 mm) steel pipe, which is permitted to supply 40 sprinklers in an ordinary hazard area, can supply a total of 60 sprinklers where not more than 40 sprinklers protect the occupied space below the ceiling.

A.23.5.4 The piping schedule shown in Table A.23.5.4 is reprinted only as a guide for existing systems. New systems for extra hazard occupancies should be hydraulically calculated as required in 23.5.4.

Table A.23.5.4 Extra Hazard Pipe Schedule

Steel		Copper	
Size (in.)	**Number of Sprinklers**	**Size (in.)**	**Number of Sprinklers**
1	1	1	1
1¼	2	1¼	2
1½	5	1½	5
2	8	2	8
2½	15	2½	20
3	27	3	30
3½	40	3½	45
4	55	4	65
5	90	5	100
6	150	6	170

For SI units, 1 in. = 25.4 mm.

A.23.7 In the design of an exposure protection system, the flow rate from window and cornice sprinklers is shown in Table 23.7.1. The flow rates are based on the guide numbers selected from Table 4.3.7.3 of NFPA 80A, which can be utilized as the basis for determining whether exposure protection is needed.

A.24.1.3.3 For typical combined domestic/fire sprinkler demands, systems with 4 in. (100 mm) pipe or larger typically do not need to include the domestic demand in the calculations because it is such a small fraction of the total flow that it does not make a significant difference in the results. But for situations where 4 in. (100 mm) pipe is used for the combined domestic/fire sprinkler systems and the domestic demand is considerable, then the domestic demand should be included in the calculations. Generally, pipe that is 6 in. or larger can carry combined domestic/fire protection demand without any consideration for domestic demand being necessary.

A.24.1.5 Evaluation of the water supply and environmental conditions does not necessarily require a water sample analysis by a laboratory. Instead, general knowledge of the long-term condition of sprinkler systems with similar piping materials in similar environments on the same water supply can be a sufficient evaluation.

There are several options to address the effects of MIC on sprinkler systems. Some types of sprinkler pipe such as CPVC have not shown to be affected by MIC. Other types of pipe are being manufactured with a biofilm that resists the effects of MIC.

Where water supplies are treated with biocides, evaluation of the effects of the biocide on sprinkler system components (pipe, fittings, sprinklers, gaskets, valves, and seals) is just as important as evaluating the effect the biocide has on the organisms. Where water treatment is selected as the method to deal with MIC, all water entering the system during testing or flushing needs to be treated so that the organisms do not get a chance to establish themselves.

Since all of the conditions that can affect the growth of MIC are unknown, a plan to sample randomly selected interior positions in the system can be effective. The frequency and location of the interior inspections will depend on the extent of the known MIC problem with the same water supply and similar environmental conditions.

A.24.1.6.2 Where the system riser is close to an outside wall, underground fittings of proper length should be used in order to avoid pipe joints located in or under the wall. Where the connection passes through the foundation wall below grade, a 1 in. to 3 in. (25 mm to 76 mm) clearance should be provided around the pipe and the clear space filled with asphalt mastic or similar flexible waterproofing material.

A.24.1.7 Where water meters are in the supply lines to a sprinkler system, they should be rated to deliver the proper system demand. The amount of water supplied through a water meter varies with its size and type and might not provide the required demand, regardless of the water supply available.

A.24.1.8 Where connections are made from public waterworks systems, such systems should be guarded against possible contamination as follows *(see AWWA M14, Recommended Practice for Backflow Prevention and Cross Connection Control)*:

(1) For private fire service mains with direct connections from public waterworks mains only or with booster pumps installed in the connections from the street mains, no tanks or reservoirs, no physical connection from other water supplies, no antifreeze or other additives of any kind, and with all drains discharging to atmosphere, dry well, or other safe outlets, no backflow protection is recommended at the service connection.
(2) For private fire service mains with direct connection from the public water supply main plus one or more of the following: elevated storage tanks or fire pumps taking suction from aboveground covered reservoirs or tanks (all storage facilities are filled or connected to public water only and the water in the tanks is to be maintained in a potable condition), an approved double check valve assembly is recommended.
(3) For private fire service mains directly supplied from public mains with an auxiliary water supply such as a pond or river on or available to the premises and dedicated to fire department use; or for systems supplied from public mains and interconnected with auxiliary supplies, such as pumps taking suction from reservoirs exposed to contamination or rivers and ponds; driven wells, mills, or other industrial water systems; or for systems or portions of systems where antifreeze or other solutions are used, an approved reduced pressure zone-type backflow preventer is recommended.

Where connections are made from public waterworks systems, it might be necessary to guard against possible contamination of the public supply.

A.24.2.1 Acceptable water supplies for fire sprinkler systems must provide sufficient flow and pressure for the required duration per 23.1.2. Many water supply sources contain sufficient flow and volume but do not possess sufficient pressure. Some acceptable water supplies, such as storage tanks located at or below grade, rivers, lakes, and reservoirs, will almost always require combination with a pump to provide the needed pressure. Fire pumps are used with other supplies such as water-

Copyright 2014 National Fire Protection Association (NFPA). Licensed, by agreement, for individual use and download on October 4, 2014 to LEADER and READER for designated user PATTARAPORN SRITRAKOOL. No other reproduction or transmission in any form permitted without written permission of NFPA. For inquires or to report unauthorized use, contact licensing@nfpa.org.

works or gravity tanks to provide additional pressure needed to meet the system demand.

A.24.2.1(7) In an effort to help comply with efforts for sustainable and renewable building construction, some engineers and architects have suggested the use of reclaimed or recycled water to use in fire sprinkler systems rather than the potable water typically used from the public water supply. While this effort has some merit, there is a concern about the quality of the water from these recycled and reclaimed systems. The capture of rainwater is generally not considered a problem since NFPA 13 has long allowed the use of open lakes, rivers, and ponds, which are nothing more than open collections of rainwater and melted snow. But other systems that are recycling water that has been used in some industrial or other process might have contaminants that are combustible, or they might be detrimental to the sprinkler system by preventing it from working properly or accelerating corrosion. Recycled or reclaimed water should never be used in a sprinkler system until an analysis of what contaminants might be in the water has determined that nothing will be detrimental to sprinkler system performance or the expected reasonable life of the sprinkler system. When such an analysis is completed successfully, the information should be transmitted to the sprinkler contractor through the use of the Owner's Certificate required by Section 4.3.

A.24.2.2 Care should be taken in making water tests to be used in designing or evaluating the capability of sprinkler systems. The water supply tested should be representative of the supply that might be available at the time of a fire. For example, testing of public water supplies should be done at times of normal demand on the system. Public water supplies are likely to fluctuate widely from season to season and even within a 24-hour period. Allowance should be made for seasonal or daily fluctuations, for drought conditions, for possibility of interruption by flood, or for ice conditions in winter. Testing of water supplies also normally used for industrial use should be done while water is being drawn for industrial use. The range of industrial-use demand should be taken into account. In special situations where the domestic water demand could significantly reduce the sprinkler water supply, an increase in the size of the pipe supplying both the domestic and sprinkler water can be justified.

Future changes in water supplies should be considered. For example, a large, established, urban supply is not likely to change greatly within a few years. However, the supply in a growing suburban industrial park might deteriorate quite rapidly as greater numbers of plants draw more water.

Dead-end mains should be avoided, if possible, by arranging for mains supplied from both directions. When private fire service mains are connected to dead-end public mains, each situation should be examined to determine if it is practical to request the water utility to loop the mains in order to obtain a more reliable supply.

Testing of Water Supply. To determine the value of public water as a supply for automatic sprinkler systems, it is generally necessary to make a flow test to determine how much water can be discharged at a residual pressure at a rate sufficient to give the required residual pressure under the roof (with the volume flow hydraulically translated to the base of the riser) — that is, a pressure head represented by the height of the building plus the required residual pressure.

The proper method of conducting this test is to use two hydrants in the vicinity of the property. The static pressure should be measured on the hydrant in front of or nearest to the property and the water allowed to flow from the hydrant next nearest the property, preferably the one farthest from the source of supply if the main is fed only one way. The residual pressure will be that indicated at the hydrant where water is not flowing.

Referring to Figure A.24.2.2, the method of conducting the flow tests is as follows:

(1) Attach the gauge to the hydrant *(A)* and obtain static pressure.
(2) Either attach a second gauge to the hydrant *(B)* or use the pitot tube at the outlet. Have hydrant *(B)* opened wide and read pressure at both hydrants.
(3) Use the pressure at *(B)* to compute the gallons flowing and read the gauge on *(A)* to determine the residual pressure or that which will be available on the top line of sprinklers in the property.

Water pressure in pounds per square inch for a given height in feet equals height multiplied by 0.433.

In making flow tests, whether from hydrants or from nozzles attached to hose, always measure the size of the orifice. While hydrant outlets are usually 2½ in. (64 mm), they are sometimes smaller and occasionally larger. Underwriters Laboratories play pipe is 1⅛ in. (29 mm) and 1¾ in. (44 mm) with the tip removed, but occasionally nozzles will be 1 in. (25.4 mm) or 1¼ in. (33 mm), and with the tip removed the opening can be only 1½ in. (38 mm).

The pitot tube should be held approximately one-half the diameter of the hydrant or nozzle opening away from the opening. It should be held in the center of the stream, except that in using hydrant outlets the stream should be explored to ascertain the average pressure.

For further information on water supply testing, see NFPA 291.

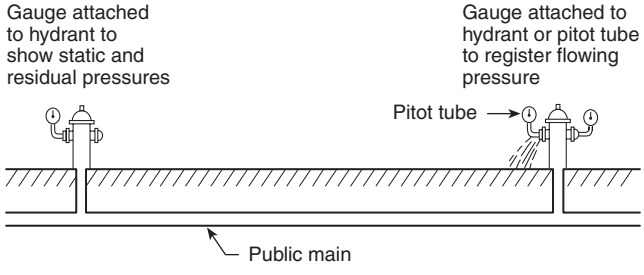

FIGURE A.24.2.2 Method of Conducting Flow Tests.

A.24.2.2.2 An adjustment to the waterflow test data to account for daily and seasonal fluctuations, possible interruption by flood or ice conditions, large simultaneous industrial use, future demand on the water supply system, or any other condition that could affect the water supply should be made as appropriate.

A.24.2.3 An automatically controlled vertical turbine pump taking suction from a reservoir, pond, lake, river, cistern, or well or a centrifugal pump supplied from a waterworks system connection, or tank, complies with 24.2.3.

See sections dealing with sprinkler equipment supervisory and waterflow alarm services in *NFPA 72*.

Copyright 2014 National Fire Protection Association (NFPA). Licensed, by agreement, for individual use and download on October 4, 2014 to LEADER and READER for designated user PATTARAPORN SRITRAKOOL. No other reproduction or transmission in any form permitted without written permission of NFPA. For inquires or to report unauthorized use, contact licensing@nfpa.org.

A.24.2.4.3 For pipe schedule systems, the air pressure to be carried and the proper proportion of air in the tank can be determined from the following formulas where:

P = air pressure carried in pressure tank
A = proportion of air in tank
H = height of highest sprinkler above tank bottom

When the tank is placed above the highest sprinkler, use the following formula:

$$P = \frac{30}{A} - 15$$

If $A = \frac{1}{3}$, then $P = 90 - 15 = 75$ lb psi
If $A = \frac{1}{2}$, then $P = 60 - 15 = 45$ lb psi
If $A = \frac{2}{3}$, then $P = 45 - 15 = 30$ lb psi

When the tank is below the level of the highest sprinkler, use the following formula:

$$P = \frac{30}{A} - 15 + \frac{0.434H}{A}$$

If $A = \frac{1}{3}$, then $P = 75 + 1.30H$
If $A = \frac{1}{2}$, then $P = 45 + 0.87H$
If $A = \frac{2}{3}$, then $P = 30 + 0.65H$

The preceding respective air pressures are calculated to ensure that the last water will leave the tank at a pressure of 15 psi (1 bar) when the base of the tank is on a level with the highest sprinkler or at such additional pressure as is equivalent to a head corresponding to the distance between the base of the tank and the highest sprinkler when the latter is above the tank.

For hydraulically calculated systems, the following formula should be used to determine the tank pressure and ratio of air to water:

$$P_i = \frac{P_f + 15}{A} - 15$$

where:
P_i = tank pressure
P_f = pressure required from hydraulic calculations
A = proportion of air

Example: Hydraulic calculations indicate 75 psi (5.2 bar) is required to supply the system. What tank pressure will be required?

$$P_i = \frac{75 + 15}{0.5} - 15$$
$$P_i = 180 - 15 = 165 \text{ psi}$$

For SI units, 1 ft = 0.3048 m; 1 psi = 0.0689 bar.

In this case, the tank would be filled with 50 percent air and 50 percent water, and the tank pressure would be 165 psi (11.4 bar). If the pressure is too high, the amount of air carried in the tank will have to be increased.

Pressure tanks should be located above the top level of sprinklers but can be located in the basement or elsewhere.

A.25.2.1 The use of noncombustible compressed gas to increase the pressure in a water-filled system is an acceptable test procedure.

A.25.2.1.8 As an example, in a system that had piping at an elevation that was 25 ft (7.6 m) higher than the test gauge, an acceptable pressure during the hydrostatic test is 189 psi (13.03 bar) at the top of the system due to the loss of 11 psi (0.76 bar) in elevation pressure [25 ft × 0.433 psi/ft = 11 psi (0.76 bar)].

A.25.2.1.9 Biocides and other chemicals that are approved and used for the prevention and mitigation of MIC and that do not adversely affect the fire-fighting properties of the water or the performance of the fire sprinkler system components are not prohibited.

A.25.2.1.14 Valves isolating the section to be tested might not be "drop-tight." When such leakage is suspected, test blanks of the type required in 25.2.1.14 should be used in a manner that includes the valve in the section being tested.

A.25.2.3.2 When the acceptance test is being performed during freezing conditions, a partial flow trip test should be conducted at that time and the full flow trip test specified should be conducted as soon as conditions permit.

A.25.2.3.2.2 The test criteria are based on the first evidence of waterflow to the inspector's test. Air can be mixed with the water for several minutes until the air is completely flushed from the system.

A.25.2.3.2.2.1 Although the time criteria for calculated systems is not required to be verified, a test is still required to document the initial water delivery for comparison to future inspection test requirements. If the time of a single sprinkler test outlet exceeds 70 seconds, evaluation of the calculations and the system installation might be necessary.

A.25.2.3.4.2 Measuring the flow during a main drain test is not required.

A.25.5 See Figure A.25.5.

This system as shown on . . . . . company

print no . . . . . dated . . . . . .

for . . . . . .

at . . . . . contract no . . . . . .

is designed to discharge at a rate of . . . . . gpm/ft^2

(L/min/m^2) of floor area over a maximum area of . . . . . .

ft^2 (m^2) when supplied with water at a rate of . . . . . .

gpm (L/min) at . . . . . psi (bar) at the base of the riser.

Hose stream allowance of . . . . . gpm (L/min)

is included in the above.

Occupancy classification . . . . . .

Commodity classification . . . . . .

Maximum storage height . . . . . .

FIGURE A.25.5 Sample Hydraulic Design Information Sign.

Copyright 2014 National Fire Protection Association (NFPA). Licensed, by agreement, for individual use and download on October 4, 2014 to LEADER and READER for designated user PATTARAPORN SRITRAKOOL. No other reproduction or transmission in any form permitted without written permission of NFPA. For inquires or to report unauthorized use, contact licensing@nfpa.org.

A.25.6 While the information on this sign is useful during an inspection, such use should not be considered a hazard assessment based on the requirements of this standard. *(See Figure A.25.6.)*

A.26.1.3(4) The backbone of the fire protection philosophy for U.S. flagged vessels and passenger vessels that trade internationally is limiting a fire to the compartment of origin by passive means. Materials that do not withstand a 1-hour fire exposure when tested in accordance with ASTM E 119, *Standard Test Methods for Fire Tests of Building Construction and Materials*, are considered "heat sensitive." *[See Figure A.26.1.3(4).]*

A.26.1.3(8) Some types of sprinkler systems can closely resemble marine systems, such as a system installed on a floating structure that has a permanent water supply connection to a public main. For these types of systems, judgment should be used in determining if certain aspects of Chapter 26 are applicable.

A.26.1.3(9) A marine thermal barrier is typically referred to as a B-15 boundary.

A.26.1.4 In addition to the examples provided in A.5.1, Table A.26.1.4 provides additional examples of occupancy definitions of typical shipboard spaces.

The classifications in Table A.26.1.4 are not meant to be applied without giving consideration to the definition of each occupancy hazard given in the standard. Table A.26.1.4 is general guidance for classification of typical spaces. Where a space is outfitted such that the occupancy definitions indicate that another classification would be more appropriate, the most representative and most demanding occupancy classification should be used. For example, it would certainly be possible to outfit a stateroom to require upgrading the occupancy to ordinary hazard, Group 1.

When a vessel undergoes modifications, alterations, or service changes that significantly affect the fire risk of the occupancy of one or more compartments, the occupancy classification should be reevaluated to determine if it has changed.

SPRINKLER SYSTEM — GENERAL INFORMATION
for

_____
_____
_____

High-piled storage ❑ Yes ❑ No
Rack storage: ❑ Yes ❑ No
Commodity class: _____
Max. storage height _____ ft
Aisle width (min.) _____ ft
Encapsulation ❑ Yes ❑ No
Solid shelving: ❑ Yes ❑ No
Flammable/ combustible liquids: ❑ Yes ❑ No
Other storage: ❑ Yes ❑ No
_____
Hazardous materials: ❑ Yes ❑ No
Idle pallets: ❑ Yes ❑ No
Antifreeze systems ❑ Yes ❑ No
Location: _____
Dry or aux systems ❑ Yes ❑ No
Location: _____

Date: _____
Flow test data:
Static: _____ psi
Resid: _____ psi
Flow: _____ gpm
Pitot: _____ psi
Date: _____
Location: _____
_____

Location of aux/low point drains:
_____
_____
_____

Original main drain test results:
Static: _____ psi
Residual: _____ psi

Where injection systems are used to treat MIC or corrosion:
Type of chemical: _____ Concentration: _____ For proper disposal, see:
_____

Name of contractor or designer: _____
Address: _____
Phone: _____

FIGURE A.25.6 Sprinkler System General Information.

Copyright 2014 National Fire Protection Association (NFPA). Licensed, by agreement, for individual use and download on October 4, 2014 to LEADER and READER for designated user PATTARAPORN SRITRAKOOL. No other reproduction or transmission in any form permitted without written permission of NFPA. For inquires or to report unauthorized use, contact licensing@nfpa.org.

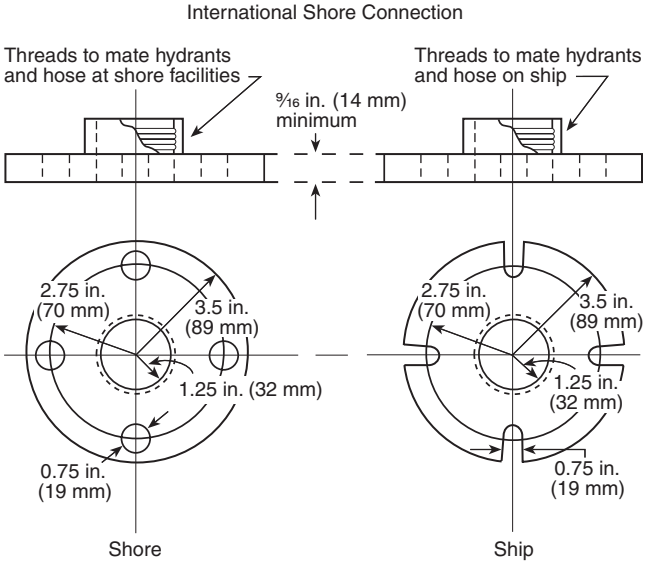

FIGURE A.26.1.3(4) International Shore Fire Connection.

A.26.1.5 Experience has shown that structures that are partially sprinklered can be overrun by well-developed fires originating in unsprinklered areas. Therefore, the entire vessel should be sprinklered whenever sprinkler systems are considered.

A.26.2.1 Sprinklers with a nominal K-factor of 2.8 (40) or less coupled with a system strainer minimize the potential for clogging.

A.26.2.2 Where a marine thermal barrier is penetrated, limiting the opening around the sprinkler pipe to 1/16 in. (1.6 mm) is considered as meeting this requirement.

A.26.2.4.1 When nonferrous materials are used, consideration should be given to protecting against galvanic corrosion where the nonferrous materials connect to steel pipe. Consideration should also be given to protection against galvanic corrosion from pipe hangers in areas of high humidity.

The piping between the sea chest and the sprinkler zone valves are likely to see the frequent flow of saltwater when testing. Sprinkler zone piping will rarely, if ever, be exposed to saltwater. In such an event, NFPA 25 requires flushing of the piping. Even if the piping is not flushed, the saltwater will not be replenished and will lose oxygen content in fairly short order.

Even if galvanized, the failure from corrosion from the interior of the pipe is likely to be at all threaded connections, welded assembly connections, and where brass sprinklers thread into ferrous pipe. Only hot dipped galvanized after fabrication of assembly (as opposed to simply hot dipped galvanized pipe and fittings) will protect against some of those failures. Hot dipped galvanized after fabrication of assembly is practical from the sea chest to the sprinkler manifold where spaces are open and pipe is relatively large and uses flanged takedown joints instead of threaded unions. Hot dipped galvanized after fabrication of assembly is not practical in the sprinkler zone pipe where it is mainly field fit.

A.26.2.5.1 When designing supports, the selection and spacing of pipe supports should take into account the pipe dimensions, mechanical and physical properties of piping materials and supports, operating temperature, thermal expansion effects, external loads, thrust forces, vibration, maximum accelerations, differential motions to which the system might be subjected, and the type of support.

The route of the vessel is intended to be descriptive of its usual operating area. For example, expected motion of the system on an ocean vessel is expected to be considerably greater than the motion of a vessel that operates on a river. A vessel that operates within the confines of any of the Great Lakes is expected to subject the system pipe to greater motion than would a vessel that operates on a lake such as Lake Tahoe.

It is recommended that the designer review the requirements for automatic sprinkler systems that are subject to earthquakes. While it is obvious that shipboard motions and accelerations differ from those that occur during an earthquake, the general principle of protecting the piping system against damage applies. Individual hanger design, however, will be very similar.

Earthquake protection does not apply to ships; however, motions are similar to those that a ship will experience in a seaway. The design principles discussed in this section should be used as a guide for shipboard system design.

A.26.2.5.3 Use of heat-sensitive materials for pipe hangers and supports might be desirable in some cases. Where heat-sensitive materials are used, the hangers and supports should be adequately protected by either the direct application of insulation or installation behind a marine thermal barrier. Insulation materials applied directly to hangers should be insulated in accordance with the method provided in Society of Naval Architects and Marine Engineers Technical Research Bulletin 2-21, "Aluminum Fire Protection Guidelines."

A.26.2.5.4 Consideration should be given to increasing the size of rods and U-hooks as necessary, to account for service and operational loading, including ship motion and vibrations.

A.26.2.6.1 Shipboard installations will normally require more than one valve per water supply. Locking valves in the open position is not an acceptable substitute for the requirement of 26.2.6.1 but can be done in addition to the supervision requirement.

A.26.2.7.1 International Shore Connections are portable universal couplings that permit connections of shipboard sprinkler or firemain systems between one ship and another or between a shore facility and a ship. Both the ship and the shore facility are expected to have an international shore connection fitting such that in an emergency they can be attached to their respective fire hoses and bolted together to permit charging the ship's system. It must be portable to accommodate hose-to-hose connection and allow assistance from any position.

Copyright 2014 National Fire Protection Association (NFPA). Licensed, by agreement, for individual use and download on October 4, 2014 to LEADER and READER for designated user PATTARAPORN SRITRAKOOL. No other reproduction or transmission in any form permitted without written permission of NFPA. For inquires or to report unauthorized use, contact licensing@nfpa.org.

Table A.26.1.4 Examples of Shipboard Space Occupancy Classification

Occupancy Type	Space Types Included		Examples
	CFR[a]	SOLAS[b]	
Light hazard	1[c], 2, 3, 4, 5, 6, 7, 8[d], 13	1[c], 2, 3, 4, 5, 6, 7, 8, 9	Accommodation spaces Small pantries
Ordinary hazard (Group 1)	8[d], 9[d]	12, 13[d]	Galleys Storage areas Sales shops Laundries Pantries with significant storage
Ordinary hazard (Group 2)	9[d], 11[d]	12[d], 13[d]	Sales shops Storage areas Stages (with sets) Machine shops
Extra hazard (Group 1)	1, 9[d], 10, 11[d]	1, 12[d], 13[d]	Auxiliary machinery — limited-combustible liquids[e] Steering rooms — combustible hydraulic fluid in use[e]
Extra hazard (Group 2)	1, 9[d], 10, 11[d]	1, 12[d], 13[d]	Auxiliary machinery — with combustible liquids[e] Machinery spaces[e]

[a] Space-type designations are given in 46 CFR 72.05-5.

[b] Space-type designations are given in the *International Convention for the Safety of Life at Sea*, 1974 (SOLAS 74), as amended, regulations II-2/3 and II-2/26.

[c] Primarily for accommodation-type control stations, such as the wheel house, which would not include generator rooms or similar-type spaces.

[d] Depends on storage type, quantity, and height and distance below sprinkler.

[e] Automatic sprinklers typically will not be the primary means of protection in these areas; total flooding systems are usually used.

Installation of an additional fire boat connection might be required on-board vessels whose route is such that regular access to fire boats is possible. An additional fire boat connection might not be necessary where fire boats are equipped to connect to the regular fire department connection. *(See A.26.2.7.7.)*

A.26.2.7.7 Selection of the pipe thread for the fire department connection should be done very carefully. It is recommended that a 2½ in. (63.5 mm) siamese connection with National Standard Hose Thread be used since a majority of fire department hose lines will be compatible with this thread. However, it must be noted that some fire jurisdictions might not be compatible with a connection of this type. Serious consideration should be given to the vessel's typical operating area. Precautions and planning should avert the possibility of the vessel being forced ashore by fire at a location where the fire department equipment is not compatible with this connection. Carriage of extra fittings and pre-voyage arrangements with all applicable jurisdictions should be considered. The international shore connection is required to ensure that all vessels fitted with sprinkler systems have at least one type of common connection.

A.26.3.1 Special consideration should be given to the installation of relief valves in all wet pipe systems. Ambient ship temperatures can vary greatly depending on operating environment, duration of voyage, and failure of climate control systems.

A.26.4.2 Areas fitted primarily with multiple staterooms and corridors should be considered sleeping accommodation areas.

A.26.4.4 If combustibles are present such that they constitute a threat, the space should be sprinklered. One example would be the presence of large bundles of unsheathed computer or electrical cable. Typical amounts of lighting or control cabling should not be considered to constitute a fire threat.

A.26.4.10.1(4) Because of its melting point, brazing would be considered heat sensitive. The criterion of this paragraph is intended to permit brazed joints without requiring that they be installed behind a marine thermal barrier, while maintaining the fire resistance as stated in 26.4.10.1 under reasonably foreseeable failure modes.

A.26.4.12.1 While not required, a dual annunciator alarm panel system is recommended. One panel should show the piping system layout and indicate status of zone valves, tank pressures, water supply valves, pump operation, and so forth. The second panel should show the vessel's general arrangement and indicate status of waterflow (i.e., fire location) alarms.

A.26.5.2 For example, a design area of 1500 ft^2 (139.3 m^2) is used to design a sprinkler system for an unobstructed light hazard occupancy. In this case, the system must supply at least seven sprinklers that are installed within that area. If eight sprinklers are installed to protect windows within this design area, the water demand of these sprinklers is added to the total water demand. Thus, 15 sprinklers must be supplied by this system.

A.26.5.3 Hose stream flow need not be added to the water demand. The water supply for fire streams is supplied by separate fire pump(s) that supply the vessel's fire main.

Copyright 2014 National Fire Protection Association (NFPA). Licensed, by agreement, for individual use and download on October 4, 2014 to LEADER and READER for designated user PATTARAPORN SRITRAKOOL. No other reproduction or transmission in any form permitted without written permission of NFPA. For inquires or to report unauthorized use, contact licensing@nfpa.org.

A.26.6.4 In vessels, the elevation of sprinklers with respect to the water supply varies as the vessel heels to either side or trims by the bow or stern. The water demand requirements can be increased or decreased under these conditions. This requirement aligns the operational parameters of this safety system with that required for other machinery vital to the safety of the vessel.

A.26.7.2.7 The purpose of this requirement is to ensure that the pressure tank air supply will not keep the tank "fully" pressurized while water is expelled, thus preventing pump actuation.

A.26.7.3.3 NFPA 20 requires that fire pumps furnish not less than 150 percent of their rated capacity at not less than 65 percent of their rated heat. The intention of the requirement of 26.7.3.3 is to limit designers to 120 percent of the rated capacity of the pump to provide an additional factor of safety for marine systems.

A.26.7.3.12.2(1) Pumps should not be located within the same compartment. However, where this is not reasonable or practical, special attention should be given to protecting pumps such that a single failure will not render the sprinkler system inoperative. *[See Figure A.26.7.3.12.2(1).]*

A.26.7.3.13 See Figure A.26.7.3.13.

A.26.7.4.6 This procedure should be used to qualify each water supply to which the vessel is to be attached. For example, this might require testing of multiple hydrants or connections in the same mooring area. The pressure loss effect of the hose or piping leading from the water supply to the ship should also be considered when qualifying each hydrant.

A.27.1 *Impairments.* Before shutting off a section of the fire service system to make sprinkler system connections, notify the authority having jurisdiction, plan the work carefully, and assemble all materials to enable completion in the shortest possible time. Work started on connections should be completed without interruption, and protection should be restored as promptly as possible. During the impairment, provide emergency hose lines and extinguishers and maintain extra watch service in the areas affected.

When changes involve shutting off water from any considerable number of sprinklers for more than a few hours, temporary water supply connections should be made to sprinkler systems so that reasonable protection can be maintained. In adding to old systems or revamping them, protection should be restored each night so far as possible. The members of the private fire brigade as well as public fire departments should be notified as to conditions.

Maintenance Schedule. The items shown in Table A.27.1 should be checked on a routine basis.

A.27.2 The presence of a sprinkler system and components creates a reasonable expectation by the public that these safety features are functional. When systems are inoperable or taken out of service but the devices remain, they present a false sense of safety. Also, before taking any part of a sprinkler system out of service, extreme care needs to be exercised to ensure that the system is not required, was not originally provided as an alternative or equivalent, or is no longer required due to other new requirements in the current codes and standards. It is not intended that the entire system or all components be removed. Instead, components such as sprinklers, initiating devices, notification appliances, and standpipe hose should be removed to reduce the likelihood of relying on inoperable systems or features. Control valves and other components that are allowed to be abandoned in place should have operating mechanisms removed and be painted a unique color to indicate that they are no longer in service.

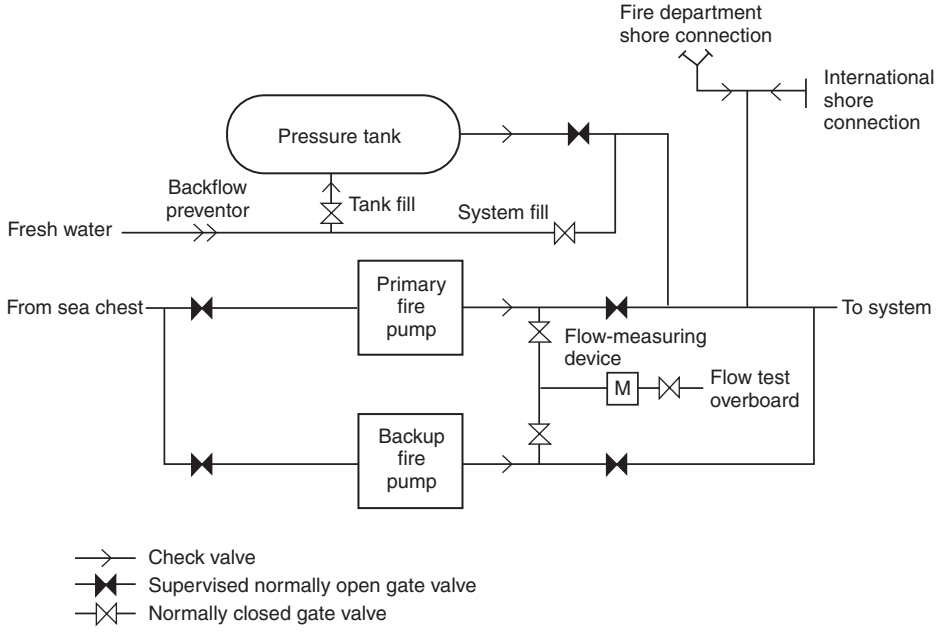

FIGURE A.26.7.3.12.2(1) Abbreviated Example of Dual Fire Pump Water Supply.

Copyright 2014 National Fire Protection Association (NFPA). Licensed, by agreement, for individual use and download on October 4, 2014 to LEADER and READER for designated user PATTARAPORN SRITRAKOOL. No other reproduction or transmission in any form permitted without written permission of NFPA. For inquires or to report unauthorized use, contact licensing@nfpa.org.

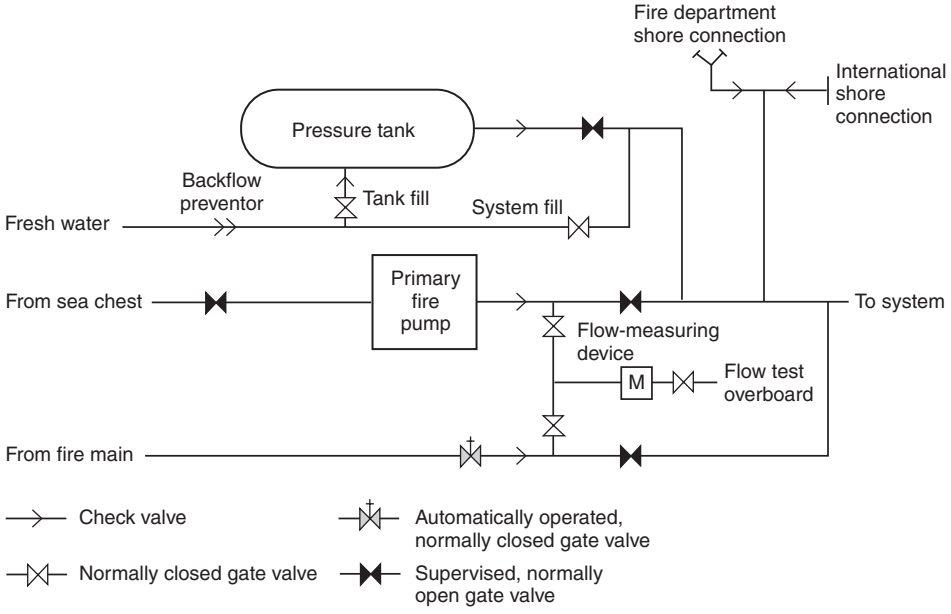

FIGURE A.26.7.3.13 Abbreviated Example of Water Supply with Fire Pump Backup.

Table A.27.1 Maintenance Schedule

Parts	Activity	Frequency
Flushing piping	Test	5 years
Fire department connections	Inspection	Monthly
Control valves	Inspection	Weekly — sealed
	Inspection	Monthly — locked
	Inspection	Monthly — tamper switch
	Maintenance	Yearly
Main drain	Flow test	Quarterly — annual
Open sprinklers	Test	Annually
Pressure gauge	Calibration test	
Sprinklers	Test	50 years
Sprinklers — high-temperature	Test	5 years
Sprinklers — residential	Test	20 years
Waterflow alarms	Test	Quarterly
Preaction/deluge detection system	Test	Semiannually
Preaction/deluge systems	Test	Annually
Antifreeze solution	Test	Annually
Cold weather valves	Open and close valves	Fall, close; spring, open
Dry/preaction/deluge systems		
Air pressure and water pressure	Inspection	Weekly
Enclosure	Inspection	Daily — cold weather
Priming water level	Inspection	Quarterly
Low-point drains	Test	Fall
Dry pipe valves	Trip test	Annually — spring
Dry pipe valves	Full flow trip	3 years — spring
Quick-opening devices	Test	Semiannually

Copyright 2014 National Fire Protection Association (NFPA). Licensed, by agreement, for individual use and download on October 4, 2014 to LEADER and READER for designated user PATTARAPORN SRITRAKOOL. No other reproduction or transmission in any form permitted without written permission of NFPA. For inquires or to report unauthorized use, contact licensing@nfpa.org.

Annex B Miscellaneous Topics

This annex is not a part of the requirements of this NFPA document but is included for informational purposes only.

B.1 Figure B.1 shows acceptable methods for interconnection of the fire protection and domestic water supply.

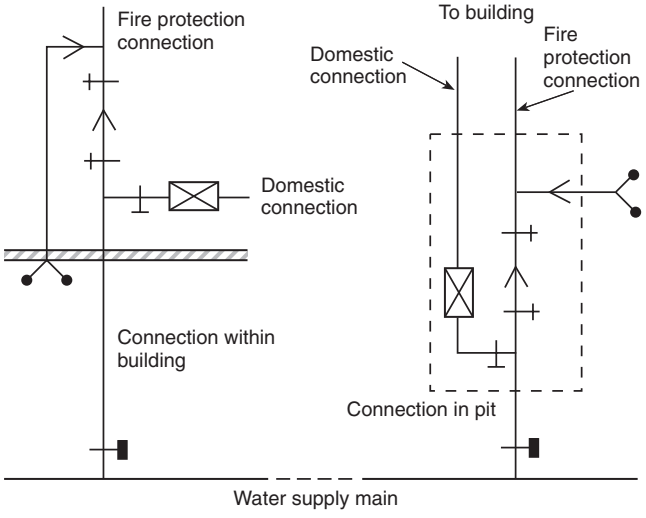

FIGURE B.1 Permitted Arrangements Between Fire Protection Water Supply and Domestic Water Supply.

B.2 Sprinkler System Performance Criteria.

B.2.1 Sprinkler system performance criteria have been based on test data. The factors of safety are generally small, are not definitive, and can depend on expected (but not guaranteed) inherent characteristics of the sprinkler systems involved. These inherent factors of safety consist of the following:

(1) The flow-declining pressure characteristic of sprinkler systems whereby the initial operating sprinklers discharge at a higher flow than with all sprinklers operating within the designated area.
(2) The flow-declining pressure characteristic of water supplies, which is particularly steep where fire pumps are the water source. This characteristic similarly produces higher than design discharge at the initially operating sprinklers.

The user of these standards can elect an additional factor of safety if the inherent factors are not considered adequate.

B.2.1.1 Performance-specified sprinkler systems, as opposed to scheduled systems, can be designed to take advantage of multiple loops or gridded configurations. Such configurations result in minimum line losses at expanded sprinkler spacing, in contrast to the older tree-type configurations, where advantage cannot be taken of multiple path flows.

Where the water supply characteristics are relatively flat with pressures being only slightly above the required sprinkler pressure at the spacing selected, gridded systems with piping designed for minimal economic line losses can all but eliminate the inherent flow-declining pressure characteristic generally assumed to exist in sprinkler systems. In contrast, the economic design of a tree-type system would likely favor a system design with closer sprinkler spacing and greater line losses, demonstrating the inherent flow-declining pressure characteristic of the piping system.

Elements that enter into the design of sprinkler systems include the following:

(1) Selection of density and area of application
(2) Geometry of the area of application (remote area)
(3) Permitted pressure range at sprinklers
(4) Determination of the water supply available
(5) Ability to predict expected performance from calculated performance
(6) Future upgrading of system performance
(7) Size of sprinkler systems

In developing sprinkler specifications, each of these elements needs to be considered individually. The most conservative design should be based on the application of the most stringent conditions for each of the elements.

B.2.1.2 Selection of Density and Area of Application. Specifications for density and area of application are developed from NFPA standards and other standards. It is desirable to specify densities rounded upward to the nearest 0.005 gpm/ft^2 (0.2 mm/min).

Prudent design should consider reasonable-to-expect variations in occupancy. This design would include not only variations in type of occupancy but also, in the case of warehousing, the anticipated future range of materials to be stored, clearance to ceiling, types of arrays, packaging, pile height, and pile stability, as well as other factors.

Design should also consider some degree of adversity at the time of a fire. To take this into account, the density and/or area of application can be increased. Another way is to use a dual-performance specification where, in addition to the normal primary specifications, a secondary density and area of application are specified. The objective of such a selection is to control the declining pressure-flow characteristic of the sprinkler system beyond the primary design flow.

A case can be made for designing feed and cross mains to lower velocities than branch lines to achieve the same result as specifying a second density and area of application.

B.2.1.3 Geometry of Area of Application (Remote Area). It is expected that, over any portion of the sprinkler system equivalent in size to the area of application, the system will achieve the minimum specified density for each sprinkler within that area.

Where a system is computer-designed, ideally the program should verify the entire system by shifting the area of application the equivalent of one sprinkler at a time so as to cover all portions of the system. Such a complete computer verification of performance of the system is most desirable, but unfortunately not all available computer verification programs currently do this.

This selection of the proper Hazen–Williams coefficient is important. New unlined steel pipe has a Hazen–Williams coefficient close to 140. However, it quickly deteriorates to 130 and, after a few years of use, to 120. Hence, the basis for normal design is a Hazen–Williams coefficient of 120 for steel-piped wet systems. A Hazen–Williams coefficient of 100 is generally used for dry pipe systems because of the increased tendency for deposits and corrosion in these systems. However, it should be realized that a new system will have fewer line losses than calculated, and the distribution pattern will be affected accordingly.

Copyright 2014 National Fire Protection Association (NFPA). Licensed, by agreement, for individual use and download on October 4, 2014 to LEADER and READER for designated user PATTARAPORN SRITRAKOOL. No other reproduction or transmission in any form permitted without written permission of NFPA. For inquires or to report unauthorized use, contact licensing@nfpa.org.

Conservatism can also be built into systems by intentionally designing to a lower Hazen–Williams coefficient than that indicated.

B.2.1.4 Ability to Predict Expected Performance from Calculated Performance. Ability to accurately predict the performance of a complex array of sprinklers on piping is basically a function of the pipe line velocity. The greater the velocity, the greater is the impact on difficult-to-assess pressure losses. These pressure losses are presently determined by empirical means that lose validity as velocities increase. This is especially true for fittings with unequal and more than two flowing ports.

The inclusion of velocity pressures in hydraulic calculations improves the predictability of the actual sprinkler system performance. Calculations should come as close as practicable to predicting actual performance. Conservatism in design should be arrived at intentionally by known and deliberate means. It should not be left to chance.

B.2.1.5 Future Upgrading of System Performance. It is desirable in some cases to build into the system the capability to achieve a higher level of sprinkler performance than needed at present. If this is to be a consideration in conservatism, consideration needs to be given to maintaining sprinkler operating pressures on the lower side of the optimum operating range and/or designing for low pipeline velocities, particularly on feed and cross mains, to facilitate future reinforcement.

B.3 Effect of Clearance to Ceiling on Sprinkler Performance. The problems with large clearances to ceiling were well recognized by the 1970s in terms of the effect both on delayed sprinkler activation and on the effect on droplet penetration through the fire plume. The work of Alpert (1972, 1975), Heskestad and Delichatsios (1979), and Beyler (1984) clearly identified the effect of clearance to ceiling on detection and activation of sprinklers. This was supplemented by the work of Heskestad and Smith (1976) in which the thermal responsiveness of sprinklers was studied and modeled. Similarly, the effect of the strong plumes resulting from large clearances to ceiling and highly challenging fires was recognized in the 1970s through the work of Yao and Kalelkar (1970), Yao (1976), and Yao (1980). This understanding was reflected in the development of large drop sprinklers in the 1970s [Yao (1997)]. The inability of ½ in. and 17/32 in. standard sprinklers to penetrate high-challenging fires was well understood and demonstrated in the 1970s [Yao (1976)]. The effect of excessive clearance to ceiling was also demonstrated in the testing summarized in Annex C.

This understanding of the role of clearance to ceiling on fire performance had a strong effect on the development of advanced sprinkler technologies.

References:

Alpert, R. (1972), "Calculation of Response Time of Ceiling-mounted Fire Detectors," *Fire Technology* 8, pp. 181–195.

Alpert, R. (1975), "Turbulent Ceiling Jet Induced by Large Scale Fire," *Combustion Science and Technology* 11, pp. 197–213.

Beyler, C.L. (1984), "A Design Method for Flaming Fire Detection," *Fire Technology* 20, No. 4, 1984, p. 5.

Heskestad, G., and Smith, H. (1976), "Investigation of a New Sprinkler Sensitivity Approval Test: The Plunge Test," FMRC Serial No. 22485, Factory Mutual Research Corporation, Norwood, MA, December 1976.

Heskestad, G., and Delichatsios, M. (1979), "The Initial Convective Flow in Fire," Seventeenth Symposium (International) on Combustion, The Combustion Institute, Pittsburgh, PA, pp. 1113–1123.

Yao, C., and Kalelkar, A. (1970), "Effect of Drop Size on Sprinkler Performance," *Fire Technology* 6, 1970.

Yao, C. (1976), "Development of Large-Drop Sprinklers," FMRC Serial 22476, RC76-T-18, Factory Mutual Research Corporation, Norwood, MA.

Yao, C. (1980), "Application of Sprinkler Technology," Engineering Applications of Fire Technology, National Bureau of Standards, Gaithersburg MD, and FMRC RC80-TP-34.

Yao, C. (1997), "Overview of Sprinkler Technology Research," Fire Safety Science-Proceedings of the Fifth International Symposium, Y. Hasemi (Ed.), International Association for Fire Safety Science, Boston, MA, pp. 93–110.

Annex C Explanation of Test Data and Procedures for Rack Storage

This annex is not a part of the requirements of this NFPA document but is included for informational purposes only.

C.1 Annex C provides an explanation of the test data and procedures that led to the development of sprinkler system discharge criteria for rack storage applications. Numbers in brackets refer to paragraphs in the text.

C.2 [5.6] A review of full-scale fire tests run on the standard commodity (double tri-wall carton with metal liner), of Hallmark products and 3M products (e.g., abrasives, pressure-sensitive tapes of plastic fiber, and paper), and of the considerable number of commodity tests conducted provides a guide for commodity classifications. Such guidance is not related to any other method of classification of materials; therefore, sound engineering judgment and analysis of the commodity and the packaging should be used when selecting a commodity classification.

C.3 [8.13.3.1] Tests 71, 73, 81, 83, 91, 92, 95, and 100 in the 20 ft (6.1 m) high array involving a single level of in-rack sprinklers were conducted without heat or water shields. Results were satisfactory.

Test 115 was conducted with two levels of sprinklers in racks with shields. Test 116, identical to Test 115 but without water shields, produced a lack of control. Visual observation of lower level in-rack sprinklers that did not operate although they were in the fire area indicated a need for water shields.

Tests 115 and 116 were conducted to investigate the necessity for water shields where multiple levels of in-rack sprinklers are installed. Where water shields were not installed in Test 116, the fire jumped the aisle, and approximately 76 boxes were damaged. In Test 115 with water shields, the fire did not jump the aisle, and only 32 boxes were damaged. Water shields are, therefore, suggested wherever multiple levels of in-rack sprinklers are installed, except for installations with horizontal barriers or shelves that serve as water shields.

C.4 [8.17.1.7] The time of operation of the first sprinkler varied from 52 seconds to 3 minutes and 55 seconds, with most tests under 3 minutes, except in Test 64 (Class III), where the first sprinkler operated in 7 minutes and 44 seconds. Fire detection more sensitive than waterflow is, therefore, considered necessary only in exceptional cases.

Copyright 2014 National Fire Protection Association (NFPA). Licensed, by agreement, for individual use and download on October 4, 2014 to LEADER and READER for designated user PATTARAPORN SRITRAKOOL. No other reproduction or transmission in any form permitted without written permission of NFPA. For inquires or to report unauthorized use, contact licensing@nfpa.org.

C.5 [8.17.5.1] In most tests conducted, it was necessary to use small hose for mop-up operations. Small hose was not used in the high-expansion foam test.

Test 97 was conducted to evaluate the effect of dry pipe sprinkler operation. Test results were approximately the same as the base test with a wet pipe system. A study of NFPA records, however, indicates an increase in area of operation of 30 percent to be in order for dry pipe systems as compared with wet pipe systems.

C.6 [12.1.1] Tests were conducted as a part of this program with eave line windows or louvers open to simulate smoke and heat venting. These tests opened 87.5 percent and 91 percent more sprinklers than did comparative tests without windows or louvers open. Venting tests that have been conducted in other programs were without the benefit of sprinkler protection and, as such, are not considered in this report, which covers only buildings protected by sprinklers. The design curves are based upon the absence of roof vents or draft curtains in the building. During mop-up operations, ventilating systems, where installed, should be capable of manual exhaust operations.

C.7 [12.12.1.3] No tests were conducted with idle pallets in racks using standard spray sprinklers. However, tests were conducted using ESFR and large drop sprinklers. Such storage conceivably would introduce fire severity in excess of that contemplated by protection criteria for an individual commodity classification.

C.8 [14.1.1, 15.1.1, 16.2.1.3.5, 17.2.1.8] In all valid tests with double-row racks, sprinkler water supplies were shut off at approximately 60 minutes. In only one test did the last sprinkler operate in excess of 30 minutes after ignition; the last sprinkler operated in excess of 25 minutes in three tests, with the majority of tests involving the last sprinkler operating within 20 minutes.

C.9 [16.1.1 and 17.1.1] The discharge criteria of Section 12.3 uses as a basis the large-scale fire test series conducted at the Factory Mutual Research Center, West Glocester, Rhode Island.

The test building is approximately 200 ft × 250 ft (61 m × 76 m) [50,000 ft^2 (4,645 m^2) in area], of fire-resistive construction, and contains a volume of approximately 2.25 million ft^3 (63,720 m^3), the equivalent of a 100,000 ft^2 (9,290 m^2) building that is 22.5 ft (6.86 m) high. The test building has two primary heights beneath a single large ceiling. The east section is 30 ft (9.1 m) high, and the west section is 60 ft (18.29 m) high.

The test series for storage height of 20 ft (6.1 m) was conducted in the 30 ft (9.1 m) section with clearances from the top of storage to the ceiling nominally 10 ft (3.1 m).

Doors at the lower and intermediate levels and ventilation louvers at the tops of walls were kept closed during the majority of the fire tests, which minimized the effect of exterior conditions.

The entire test series was fully instrumented with thermocouples attached to rack members, simulated building columns, bar joists, and the ceiling.

Racks were constructed of steel vertical and horizontal members designed for 4000 lb (1814 kg) loads. Vertical members were 8 ft (2.4 m) on center for conventional racks and 4 ft (1.2 m) on center for simulated automated racks. Racks were 3½ ft (1.07 m) wide with 6 in. (152.4 mm) longitudinal flue space for an overall width of 7½ ft (2.29 m). Simulated automated racks and slave pallets were used in the main central rack in the 4 ft (1.2 m) aisle tests. Conventional racks and conventional pallets were used in the main central rack in the 8 ft (2.4 m) aisle tests. The majority of the tests were conducted with 100 ft^2 (9.29 m^2) sprinkler spacing.

The test configuration for storage heights of 15 ft (4.6 m), 20 ft (6.1 m), and 25 ft (7.6 m) covered an 1800 ft^2 (167.2 m^2) floor area, including aisles between racks. Tests that were used in producing this standard limited fire damage to this area. The maximum water damage area anticipated in the standard is 6000 ft^2 (557.4 m^2), the upper limit of the design curves.

The test data show that, as density is increased, both the extent of fire damage and sprinkler operation are reduced. The data also indicate that, with sprinklers installed in the racks, a reduction is gained in the area of fire damage and sprinkler operations (e.g., water damage).

Table C.9 illustrates these points. The information shown in the table is taken from the test series for storage height of 20 ft (6.1 m) using the standard commodity.

The fact that there is a reduction in both fire damage and area of water application as sprinkler densities are increased or where sprinklers are installed in racks should be considered carefully by those responsible for applying this standard to the rack storage situation.

In the test for storage height of 25 ft (7.6 m), a density of 0.55 gpm/ft^2 (22.4 mm/min) produced 42 percent, or 756 ft^2 (70.26 m^2), fire damage in the test array and a sprinkler-wetted area of 1400 ft^2 (130.1 m^2). Lesser densities would not be expected to achieve the same limited degree of control. Therefore, if the goal of smaller areas of fire damage is to be achieved, sprinklers in racks should be considered.

The test series for storage height over 25 ft (7.6 m) was conducted in the 60 ft (18.3 m) section of the test building with nominal clearances from the top of storage to the ceiling of either 30 ft (9.1 m) or 10 ft (3.1 m).

Doors at the lower and intermediate levels and ventilation louvers at the top of walls were kept closed during the fire tests, which minimized the effect of exterior wind conditions.

The purpose of the tests for storage height over 25 ft (7.6 m) was to accomplish the following:

(1) Determine the arrangement of in-rack sprinklers that can be repeated as pile height increases and that provide control of the fire
(2) Determine other protective arrangements, such as high-expansion foam, that provide control of the fire

Control was considered to have been accomplished if the fire was unlikely to spread from the rack of origin to adjacent racks or spread beyond the length of the 25 ft (7.6 m) test rack. To aid in this judgment, control was considered to have been achieved if the fire failed to exhibit the following characteristics:

(1) Jump the 4 ft (1.2 m) aisles to adjoining racks
(2) Reach the end face of the end stacks (north or south ends) of the main rack

Control is defined as holding the fire in check through the extinguishing system until the commodities initially involved are consumed or until the fire is extinguished by the extinguishing system or manual aid.

The standard commodity as selected in the 20 ft (6.1 m) test series was used in the majority of tests for storage over 25 ft (7.6 m). Hallmark products and 3M products described in the 20 ft (6.1 m) test series report also were used as representative

Copyright 2014 National Fire Protection Association (NFPA). Licensed, by agreement, for individual use and download on October 4, 2014 to LEADER and READER for designated user PATTARAPORN SRITRAKOOL. No other reproduction or transmission in any form permitted without written permission of NFPA. For inquires or to report unauthorized use, contact licensing@nfpa.org.

of Class III or Class IV commodities, or both, in several tests. The results of privately sponsored tests on Hallmark products and plastic encapsulated standard commodities also were made available to the committee.

A 25 ft (7.6 m) long test array was used for the majority of the tests for storage over 25 ft (7.6 m). The decision to use such an array was made because it was believed that a fire in racks over 25 ft (7.6 m) high that extended the full length of a 50 ft (15.24 m) long rack could not be considered controlled, particularly as storage heights increased.

One of the purposes of the tests was to determine arrangements of in-rack sprinklers that can be repeated as pile height increases and that provide control of the fire. The tests for storage height of 30 ft (9.1 m) explored the effect of such arrays. Many of these tests, however, produced appreciable fire spread in storage in tiers above the top level of protection within the racks. (In some cases, a total burnout of the top tiers of both the main rack and the target rack occurred.) In the case of the 30 ft (9.1 m) Hallmark Test 134 on the 60 ft (18.3 m) site, the material in the top tiers of storage burned vigorously, and the fire jumped the aisle above the fourth tier. The fire then burned downward into the south end of the fourth tier. In the test on the floor, a nominal 30 ft (9.1 m) clearance occurred between the top of storage and the ceiling sprinklers, whereas on the platform this clearance was reduced to nominal 10 ft (3.1 m). In most cases, the in-rack sprinklers were effective in controlling fire below the top level of protection within the racks. It has been assumed by the Test Planning Committee that, in an actual case with a clearance of 10 ft (3.1 m) or less above storage, ceiling sprinklers would be expected to control damage above the top level of protection within the racks. Tests have been planned to investigate lesser clearances.

Tests 114 and 128 explore the effect of changing the ignition point from the in-rack standard ignition point to a face ignition location. It should be noted, however, that both of these tests were conducted with 30 ft (9.1 m) clearance from the ceiling sprinklers to the top of storage and, as such, ceiling sprinklers had little effect on the fire in the top two tiers of storage. Firespread in the three lower tiers is essentially the same. A similar change in the firespread where the ignition point is changed was noted in Tests 126 and 127. Once again, 30 ft (9.1 m) clearance occurred between the top of storage and the ceiling sprinklers, and, as such, the ceiling sprinklers had little effect on the face fire. Comparisons of Tests 129, 130, and 131 in the test series for storage height of 50 ft (15.24 m) indicate little effect of point of ignition in the particular configuration tested.

Test 125, when compared with Test 133, indicates no significant difference in result between approved low-profile sprinklers and standard sprinklers in the racks.

C.10 [16.1.4 and 17.1.4] Temperatures in the test column were maintained below 1000°F (538°C) with densities, of roof ceiling sprinklers only, of 0.375 gpm/ft^2 (15.3 mm/min) with 8 ft (2.4 m) aisles and 0.45 gpm/ft^2 (18.3 mm/min) with 4 ft (1.2 m) aisles using the standard commodity.

C.11 [16.1.6.1 and 17.1.5.1] Test 98 with solid shelves 24 ft (7.3 m) long and 7½ ft (2.3 m) deep at each level produced total destruction of the commodity in the main rack and jumped the aisle. Density was 0.3 gpm/ft^2 (12.2 mm/min) from the ceiling sprinklers only. Test 108 with shelves 24 ft (7.3 m) long and 3½ ft (1.07 m) deep and with a 6 in. (152.4 mm) longitudinal flue space and one level of sprinklers in the rack resulted in damage to most of the commodity in the main rack but did not jump the aisle. Density from ceiling sprinklers was 0.375 gpm/ft^2 (15.3 mm/min), and rack sprinklers discharged at 15 psi (1 bar).

These tests did not yield sufficient information to develop a comprehensive protection standard for solid shelf racks. Items such as increased ceiling density, use of bulkheads, other configurations of sprinklers in racks, and limitation of shelf length and depth should be considered.

Where such rack installations exist or are contemplated, the damage potential should be considered, and sound engineering judgment should be used in designing the protection system.

Test 98, with solid shelving obstructing both the longitudinal and transverse flue space, produced unsatisfactory results and indicates a need for sprinklers at each level in such a rack structure.

Test 147 was conducted with ceiling sprinklers only. Density was 0.45 gpm/ft^2 (18.3 mm/min) with a sprinkler spacing of 100 ft^2 (9.29 m^2). A total of 47 sprinklers opened, and 83 percent of the commodity was consumed. The fire jumped both aisles and spread to both ends of the main and target racks. The test was considered unsuccessful.

Test 148 was conducted with ceiling sprinklers and in-rack sprinklers. In-rack sprinklers were provided at each level (top of first, second, and third tiers) and were located in the longitudinal flue. They were directly above each other and 24 ft

Table C.9 Summary of Relationship Between Sprinkler Discharge Density and the Extent of Fire Damage and Sprinkler Operation

Density (gpm/ft^2)	Fire Damage in Test Array		Sprinkler Operation (165°F) Area (ft^2)
	%	ft^2	
0.30 (ceiling only)	22	395	4500–4800
0.375 (ceiling only)	17	306	1800
0.45 (ceiling only)	9	162	700
0.20 (ceiling only)	28–36	504–648	13,100–14,000
0.20 (sprinklers at ceiling and in racks)	8	144	4100
0.30 (sprinklers at ceiling and in racks)	7	126	700

For SI units, 1 ft = 0.3048 m; °C = 5⁄9(°F– 32); 1 gpm/ft^2 = 40.746 mm/min.

Copyright 2014 National Fire Protection Association (NFPA). Licensed, by agreement, for individual use and download on October 4, 2014 to LEADER and READER for designated user PATTARAPORN SRITRAKOOL. No other reproduction or transmission in any form permitted without written permission of NFPA. For inquires or to report unauthorized use, contact licensing@nfpa.org.

(7.3 m) on center or 22 ft (6.7 m) on each side of the ignition flue. Ceiling sprinkler discharge density was 0.375 gpm/ft^2 (15.3 mm/min). In-rack sprinkler discharge pressure was 30 psi (2.1 bar). A total of 46 ceiling sprinklers and three in-rack sprinklers opened, and 34 percent of the commodity was consumed. The fire consumed most of the material between the in-rack sprinklers and jumped both aisles.

C.12 [16.1.7 and 17.1.6] Fire tests with open-top containers in the upper tier of storage and a portion of the third tier of storage produced an increase in sprinkler operation from 36 to 41 sprinklers and a more pronounced aisle jump and increase in fire-spread in the main array. The smooth underside of the containers closely approximates fire behavior of slave pallets.

C.13 [16.1.10 and 17.1.9] Test 80 was conducted to determine the effect of closing back-to-back longitudinal 6 in. (152.4 mm) flue spaces in conventional pallet racks. Test results indicated fewer sprinklers operating than with the flue space open, and, as such, no minimum back-to-back clearance is necessary if the transverse flue space is kept open.

Tests 145 and 146 were conducted to investigate the influence of longitudinal and transverse flue dimensions in double-row racks without solid shelves. Results were compared with Tests 65 and 66. Flue dimensions in Tests 65, 66, 145, and 146 were 6 in. (152.4 mm), 6 in. (152.4 mm), 3 in. (76.2 mm), and 12 in. (0.3 m), respectively. All other conditions were the same.

In Tests 65 and 66, 45, and 48, sprinklers operated compared with 59 and 58 for Tests 145 and 146, respectively. Fire damage in Tests 145 and 146 was somewhat less than in Tests 65 and 66; 2100 ft^3 (59.51 m^3) and 1800 ft^3 (51 m^3) in Tests 145 and 146, respectively, versus 2300 ft^3 (65.13 m^3) and 2300 ft^3 (65.13 m^3) in Tests 65 and 66, respectively, of combustible material were consumed.

Test results indicate narrow flue spaces of about 3 in. (76.2 mm) allow reasonable passage of sprinkler water down through the racks.

Tests 96 and 107, on multiple-row racks, used 6 in. (152.4 mm) transverse flue spaces. The water demand recommended in the standard is limited to those cases with nominal 6 in. (152.4 mm) transverse flues in vertical alignment.

C.14 [16.2.1.3.1] Tests 65 and 66, compared with Test 69, and Test 93, compared with Test 94, indicated a reduction in areas of application of 44.5 percent and 45.5 percent, respectively, with high temperature–rated sprinklers as compared with ordinary temperature–rated sprinklers. Other extensive Factory Mutual tests produced an average reduction of 40 percent. Design curves are based on this area reduction. In constructing the design curves, the high-temperature curves above 3600 ft^2 (334.6 m^2) of application, therefore, represent 40 percent reductions in area of application of the ordinary temperature curves in the 6000 ft^2 to 10,000 ft^2 (557.6 m^2 to 929.41 m^2) range.

Test 84 indicated the number of intermediate temperature–rated sprinklers operating is essentially the same as ordinary temperature–rated sprinklers.

C.15 [16.2.1.3.2.1] Tests were not conducted with aisles wider than 8 ft (2.4 m) or narrower than 4 ft (1.2 m). It is, therefore, not possible to determine whether lower ceiling densities should be used for aisle widths greater than 8 ft (2.4 m) or if higher densities should be used for aisle widths less than 4 ft (1.2 m).

C.16 [16.2.1.4.2.4] In one 20 ft (6.1 m) high test, sprinklers were buried in the flue space 1 ft (0.3 m) above the bottom of the pallet load, and results were satisfactory. Coverage of aisles by in-rack sprinklers is, therefore, not necessary, and distribution across the tops of pallet loads at any level is not necessary for the occupancy classes tested.

C.17 [16.2.1.4.2.7] In all tests with in-rack sprinklers, obstructions measuring 3 in. × 3 ft (76.2 mm × 0.3 m) were introduced on each side of the sprinkler approximately 3 in. (76.2 mm) from the sprinkler to simulate rack structure member obstruction. This obstruction had no effect on sprinkler performance in the 20 ft (6.1 m) high tests.

Tests 103, 104, 105, and 109 in the 30 ft (9.1 m) high test with in-rack sprinklers obstructed by rack uprights produced unsatisfactory results. Tests 113, 114, 115, 117, 118, and 120 in the 30 ft (9.1 m) high test series with in-rack sprinklers located a minimum of 2 ft (0.61 m) from rack uprights produced improved results.

C.18 [16.2.1.4.3] In all except one case, using the standard commodity with one line of sprinklers installed in racks, only two sprinklers opened. In the one exception, two sprinklers opened in the main rack, and two sprinklers opened in the target rack.

C.19 [16.2.1.4.4, 16.3.2.7.8, and 17.2.2.6.8] Operating pressures were 15 psi (1 bar) on all tests of sprinklers in racks with storage 20 ft (6.1 m) high and 30 psi (2.1 bar) for storage 30 ft (9.1 m) and 50 ft (15.24 m) high.

Tests 112 and 124 were conducted to compare the effect of increasing sprinkler discharge pressure at in-rack sprinklers from 30 psi to 75 psi (2.1 bar to 5.2 bar). With the higher discharge pressure, the fire did not jump the aisle, and damage below the top level of protection within the racks was somewhat better controlled by the higher discharge pressure of the in-rack sprinklers. A pressure of 15 psi (1 bar) was maintained on in-rack sprinklers in the first 30 ft (9.1 m) high tests (Tests 103 and 104). Pressure on in-rack sprinklers in subsequent tests was 30 psi (2.1 bar), except in Test 124, where it was 75 psi (5.2 bar).

C.20 [16.2.4.1.2 and 17.2.4.1.1] A full-scale test program was conducted with various double-row rack storage arrangements of a cartoned Group A nonexpanded plastic commodity at the Factory Mutual Research Corporation (FMRC) test facility. The series of nine tests included several variations, one of which involved the use of the following four distinct shelving arrangements: slatted wood, solid wood, wire mesh, and no shelving. The results of the testing program, specifically Tests 1, 2, 3, and 5, clearly demonstrate the acceptable performance of sprinkler systems protecting storage configurations that involve the use of slated shelving as described in 16.2.4.1.1 and 17.2.4.1.1. As a result of the test program, Factory Mutual has amended FM Loss Prevention Data Sheet 8-9 to allow slatted shelving to be protected in the same manner as an open rack arrangement.

Complete details of the test program are documented in the FMRC technical report FMRC J. I. 0X1R0.RR, "Large-Scale Fire Tests of Rack Storage Group A Plastics in Retail Operation Scenarios Protected by Extra Large Orifice (ELO) Sprinklers."

C.21 [17.1.2.1] In the RSP rack storage test series as well as the stored plastics program palletized test series, compartmented 16 oz (0.47 L) polystyrene jars were found to produce significantly higher protection requirements than the same commodity in a nested configuration. Polystyrene glasses and expanded polystyrene plates were comparable to the nested jars.

Different storage configurations within cartons or different products of the same basic plastic might, therefore, require reduced protection requirements.

Copyright 2014 National Fire Protection Association (NFPA). Licensed, by agreement, for individual use and download on October 4, 2014 to LEADER and READER for designated user PATTARAPORN SRITRAKOOL. No other reproduction or transmission in any form permitted without written permission of NFPA. For inquires or to report unauthorized use, contact licensing@nfpa.org.

In Test RSP-7, with nominal 15 ft (4.6 m) high storage with compartmented jars, a 0.6 gpm/ft^2 (24.5 mm/min) density, 8 ft (2.4 m) aisles, and a 10 ft (3.1 m) clearance to ceiling, 29 sprinklers opened. In Tests RSP-4 with polystyrene glasses, RSP-5 with expanded polystyrene plates, and RSP-16 with nested polystyrene jars all stored at nominal 15 ft (4.6 m) height, 10 ft (3.1 m) clearance to ceiling, 8 ft (2.4 m) aisles, and 0.6 gpm/ft^2 (24.5 mm/min) density, only four sprinklers opened.

However, Test RSP-11, with expanded polystyrene plates and 6 ft (1.8 m) aisles, demonstrated an increase in the number of operating sprinklers to 29. Test RSP-10 with expanded polystyrene plates, nominally 15 ft (4.6 m) high with a 10 ft (3.1 m) clearance and 8 ft (2.4 m) aisles, but protected only by 0.45 gpm/ft^2 (18.3 mm/min) density, opened 46 sprinklers and burned 100 percent of the plastic commodity.

At a nominal 20 ft (6.1 m) storage height with 8 ft (2.4 m) aisles, a 3 ft (0.9 m) clearance to ceiling, and a 0.6 gpm/ft^2 (24.5 mm/min) density opened four sprinklers with polystyrene glasses in Test RSP-2 and 11 sprinklers with expanded polystyrene plates in Test RSP-6. In Test RSP-8, however, with the clearance to ceiling increased to 10 ft (3.1 m) and other variables held constant, 51 sprinklers opened, and 100 percent of the plastic commodity burned.

Test RSP-3, with polystyrene glasses at a nominal height of 25 ft (7.6 m) with a 3 ft (0.9 m) clearance to ceiling, 8 ft (2.4 m) aisles, and 0.6 gpm/ft^2 (24.5 mm/min) ceiling sprinkler density in combination with one level of in-rack sprinklers, resulted in four ceiling sprinklers and two in-rack sprinklers operating. Test RSP-9, with the same configuration but with polystyrene plates, opened 12 ceiling sprinklers and three in-rack sprinklers.

No tests were conducted with compartmented polystyrene jars at storage heights in excess of a nominal 15 ft (4.6 m) as a part of this program.

C.22 [17.2.1.2] The protection of Group A plastics by extra large orifice (ELO) sprinklers designed to provide 0.6 gpm/ft^2/2000 ft^2 (24.5 mm/min/186 m^2) or 0.45 gpm/ft^2/2000 ft^2 (18.3 mm/min/186 m^2) without the installation of in-rack sprinklers was developed from full-scale testing conducted with various double-row rack storage arrangements of a cartoned Group A nonexpanded plastic commodity at the Factory Mutual Research Corporation (FMRC) test facility. The results of this test program are documented in the FMRC technical report, FMRC J.I. 0X1R0.RR, "Large-Scale Fire Tests of Rack Stored Group A Plastics in Retail Operation Scenarios Protected by Extra Large Orifice (ELO) Sprinklers." The test program was initiated to address the fire protection issues presented by warehouse-type retail stores with regard to the display and storage of Group A plastic commodities including, but not limited to, acrylonitrile-butadiene-styrene copolymer (ABS) piping, polyvinyl chloride (PVC) hose and hose racks, tool boxes, polypropylene trash and storage containers, and patio furniture. Tests 1 and 2 of this series included protection of the Group A plastic commodity stored to 20 ft (6.1 m) under a 27 ft (8.2 m) ceiling by a design density of 0.6 gpm/ft^2 (24.5 mm/min) utilizing ELO sprinklers. The results of the testing program clearly demonstrate the acceptable performance of sprinkler systems that protect storage configurations involving Group A plastics up to 20 ft (6.1 m) in height under a 27 ft (8.2 m) ceiling where using ELO sprinklers to deliver a design density of 0.6 gpm/ft^2 (24.5 mm/min) and Group A plastics up to 14 ft (4.3 m) in height under a 22 ft (6.7 m) ceiling where using ELO sprinklers to deliver a design density of 0.45 gpm/ft^2 (18.3 mm/min). The tabulation of the pertinent tests shown in Table C.22 demonstrates acceptable performance.

C.23 [16.3.1.1] The recommended use of ordinary temperature–rated sprinklers at ceiling for storage higher than 25 ft (7.6 m) was determined by the results of fire test data. A test with high temperature–rated sprinklers and 0.45 gpm/ft^2 (18.3 mm/min) density resulted in fire damage in the two top tiers just within acceptable limits, with three ceiling sprinklers operating. A test with 0.45 gpm/ft^2 (18.3 mm/min) density and ordinary temperature–rated sprinklers produced a dramatic reduction in fire damage with four ceiling sprinklers operating.

The four ordinary temperature-rated ceiling sprinklers operated before the first of the three high temperature–rated ceiling sprinklers. In both tests, two in-rack sprinklers at two levels operated at approximately the same time. The high temperature–rated sprinklers were at all times fighting a larger fire with less water than the ordinary temperature–rated ceiling sprinklers.

Tests 115 and 119 compare ceiling sprinkler density of 0.3 gpm/ft^2 (12.2 mm/min) with 0.45 gpm/ft^2 (18.3 mm/min). Damage patterns coupled with the number of boxes damaged in the main rack suggest that the increase in density produces improved control, particularly in the area above the top tier of in-rack sprinklers.

Tests 119 and 122 compare ceiling sprinkler temperature ratings of 286°F (141°C) and 165°F (74°C). A review of the number of boxes damaged and the firespread patterns indicates that the use of ordinary temperature–rated ceiling sprinklers on a rack configuration that incorporates in-rack sprinklers dramatically reduces the amount of firespread. Considering that in-rack sprinklers in the tests for storage over 25 ft (7.6 m) operated prior to ceiling sprinklers, it would seem that the installation of in-rack sprinklers converts an otherwise rapidly developing fire, from the standpoint of ceiling sprinklers, to a slower developing fire with a lower rate of heat release.

In the 20 ft (6.1 m) high test series, ceiling sprinklers operated before in-rack sprinklers. In the 30 ft (9.1 m) high series, ceiling sprinklers operated after in-rack sprinklers. The 50 ft (15.24 m) high test did not operate ceiling sprinklers. Ceiling sprinklers would, however, be needed if fire occurred in upper levels.

The results of these tests indicate the effect of in-rack sprinklers on storage higher than 25 ft (7.6 m). From the ceiling sprinkler operation standpoint, a fire with an expected high heat release rate was converted to a fire with a much lower heat release rate.

Since the fires developed slowly and opened sprinklers at two levels in the racks, only a few ceiling sprinklers were needed to establish control. Thus, the sprinkler operating area does not vary with height for storage over 25 ft (7.6 m) or for changes in sprinkler temperature rating and density.

All tests with sprinklers in racks were conducted using nominal ½ in. (12.7 mm) orifice size sprinklers of ordinary temperature.

C.24 [20.6] A series of fire tests were conducted by Spacesaver Corporation that indicated control was achieved with light hazard sprinkler spacing and design. The tests used quick-response, ordinary-temperature sprinklers on 15 ft × 15 ft (4.6 m × 4.6 m) spacing with an 8 ft (2.44 m) high compact storage unit located in the middle of the sprinkler array. Results indicated a classic definition of control, the fire was held in check within the compact storage module and the fire did not jump the aisle or ignite any of the target arrays.

Copyright 2014 National Fire Protection Association (NFPA). Licensed, by agreement, for individual use and download on October 4, 2014 to LEADER and READER for designated user PATTARAPORN SRITRAKOOL. No other reproduction or transmission in any form permitted without written permission of NFPA. For inquires or to report unauthorized use, contact licensing@nfpa.org.

Table C.22 Summary of Test Results for Plastic Commodities Using ⅝ in. (15.9 mm) Orifice Sprinklers

	Date of Test						
Test Parameters	**8/20/93**	**8/25/93**	**9/2/93**	**10/7/93**	**2/17/94**	**2/25/94**	**4/27/94**
Type of shelving	Slatted wood	Slatted wood	Slatted wood	Slatted wood	Slatted wood	Slatted wood	Wire mesh
Other conditions/ inclusions	—	—	—	—	Draft curtains	Draft curtains	—
Storage height (ft-in.)	19-11	19-11	15-4	15-4	19-11	19-11	13-11
Number of tiers	6[a]	6[a]	5[b]	5[b]	6[a]	6[b]	3
Clearance to ceiling/sprinklers (ft-in.)	6-10/6-3	6-10/6-3	11-5/10-10	11-5/10-10	6-10/6-3	6-10/6-3	8-4/7-9
Longitudinal/ transverse flues (in.)	6/6 to 7½	6/6 to 7½	6/6 to 7	6/6 to 7½	6/6 to 7½	6/6 to 7½	6/3[c]
Aisle width (ft)	7½	7½	7½	7½	7½	7½	7½
Ignition centered below (number of sprinklers)	2	2	1	1	2	2	1
Sprinkler orifice size (in.)	0.64	0.64	0.64	0.64	0.64	0.64	0.64
Sprinkler temperature rating (°F)	165	286	286	165	165	286	286
Sprinkler RTI (ft-sec)$^{1/2}$	300	300	300	300	300	300	300
Sprinkler spacing (ft× ft)	8 × 10	8 × 10	8 × 10	8 × 10	8 × 10	8 × 10	10 × 10
Sprinkler identification	ELO-231	ELO-231	ELO-231	ELO-231	ELO-231	ELO-231	ELO-231
Constant water pressure (psi)	19	19	19	19	19	19	15.5
Minimum density (gpm/ft^2)	0.6	0.6	0.6	0.6	0.6	0.6	0.45
Test Results							
First sprinkler operation (min:sec)	2:03	2:25	1:12	0:44	1:25	0:52	0:49
Last sprinkler operation (min:sec)	2:12	15:19	6:34	7:34	15:54	14:08	10:58
Total sprinklers opened	4	9	7	13	35	18	12
Total sprinkler discharge (gpm)	205	450	363	613	1651	945	600
Average discharge per sprinkler (gpm)	51	50	52	47	47	52	50
Peak/maximum 1-min average gas temperature (°F)	1107/566	1412/868	965/308	662/184	1575/883	1162/767	1464/895
Peak/maximum 1-min average steel temperature (°F)	185/172	197/196	233/232	146/145	226/225	255/254	502/500
Peak/maximum 1-min average plume velocity (ft/sec)	27/15	25/18	18/15[d]	14/10[d]	26/23	20/18[d]	33/20
Peak/maximum 1-min heat flux (Btu/ft^2/sec)	0.6/0.5	2.0/1.9	2.8/2.5	1.1/0.8	1.0/0.9	4.8/3.0	1.6/1.4
Aisle jump, east/west target ignition (min:sec)	None	8:24/None	5:35/10:10	None	None	[e]/8:18	[e]/None
Equivalent number of pallet loads consumed	3	9	6	5	12	13	12
Test duration (min)	30	30	30	30	30	30	30
Results acceptable	Yes	Yes	Yes	Yes	No[f]	No[g]	Yes

For SI units, 1 ft = 0.305 m; 1 in. = 25.4 mm; °F = (1.8 ×°C) + 32; °C = (°F – 32)/1.8; 1 psi = 0.069 bar; 1 gpm = 3.8 L/min; 1 ft/sec = 0.31 m/sec; 1 gpm/ft^2 = 40.746 mm/min.

[a] Main (ignition) racks divided into five or six tiers; bottom tiers each approximately 2 ft (0.6 m) high and upper tiers each about 5 ft (1.5 m) high; wood shelving below commodity at second through fifth tiers.

[b] Main (ignition) racks divided into five or six tiers; bottom tiers each approximately 2 ft (0.6 m) high and upper tiers each about 5 ft (1.5 m) high; wood shelving below commodity at second through fifth tiers; wire mesh shelving below commodity at sixth tier or below fifth (top) tier commodity.

[c] Transverse flues spaced 8 ft (2.4 m) apart [versus 3½ ft (1.1 m) apart in all other tests].

[d] Instrumentation located 5 ft (1.5 m) north of ignition.

[e] Minor surface damage to cartons.

[f] High water demand.

[g] Excessive firespread; marginally high water demand.

Copyright 2014 National Fire Protection Association (NFPA). Licensed, by agreement, for individual use and download on October 4, 2014 to LEADER and READER for designated user PATTARAPORN SRITRAKOOL. No other reproduction or transmission in any form permitted without written permission of NFPA. For inquires or to report unauthorized use, contact licensing@nfpa.org.

C.25 [20.5] In July and August of 2007, a series of three large-scale fire tests were conducted at Southwest Research Institute to investigate the effectiveness of a specific ceiling and in-rack sprinkler protection scheme dedicated for the protection of paper files in 12 in. (305 mm) wide, and 16 in. (406 mm) and 10 in. (254 mm) high corrugated cardboard boxes (containers) maintained in multiple-row racks to a nominal height of 37 ft (11.3 m).

The storage rack for the main array in all three tests consisted of two 50 in. (1270 mm) deep racks placed back-to-back and separated by a 2 in. (51 mm) gap. The storage rack for the target array in all three tests consisted of a single 50 in. (1270 mm) deep rack separated on both sides of the main array by a 30 in. (762 mm) wide aisle. Rack uprights were a nominal 3 in. (76 mm) wide. Rack bays were 120 in. (3048 mm) wide, 38 in. (965 mm) high, and equipped with perforated metal decking having a minimum of 50 percent openings. Each storage bay was provided with 9 containers between uprights that was 3 containers deep and 3 containers high for a total of 81 containers per rack bay. Nominal 6 in. (152 mm) wide transverse flue spaces were provided at each rack upright. Both the main array and the target array were 4 bays long for an overall length of 41 ft 3 in. (12.6 m).

Open-grated (expanded) catwalks were provided in both storage aisles at the top of the third [9 ft 8 in. (3.0 m)], sixth [19 ft 2 in. (5.8 m)], and ninth [28 ft 8 in. (8.7 m)] tier levels.

The ceiling sprinkler system consisted of K-8.0 (115), 165°F (74°C) nominally rated, standard-response pendent automatic sprinklers installed on 10 ft × 10 ft (3.0 m × 3.0 m) spacing arranged to provide a constant 0.30 gpm/ft^2 (12 mm/min) density. A nominal 3 ft (0.9 m) clearance was provided between the top of storage and the ceiling sprinklers.

The in-rack sprinkler system consisted of K-8.0 (115), 165°F (74°C) nominally rated, quick-response upright automatic sprinklers that were equipped with water shields and arranged to provide a constant 30 gpm (114 L/min) flow from each operating in-rack sprinkler. In-rack sprinklers were provided within the transverse flue spaces of the main array, 2 ft (0.6 m) horizontally from the face of the rack, at the top of the third and ninth tier levels on one side of the main array and at the top of the sixth tier level on the other side of the main array. A minimum 6 in. (152 mm) vertical clearance was provided between the in-rack sprinkler and the top of storage within the storage rack.

The same type of sprinklers installed within the storage racks were also installed under each catwalk and designed to provide a constant 30 gpm (114 L/min) flow from each operating sprinkler. These sprinklers were centered within the aisles and installed 10 ft 3 in. (3.1 m) on line. They were arranged to be aligned with the adjacent transverse flue space when the flue space was not equipped with an in-rack sprinkler; they were positioned halfway between transverse flue spaces when the adjacent flue spaces were equipped with in-rack sprinklers.

In Test No. 1, ignition was at grade level, at the face of the rack and centered between rack uprights. The in-rack sprinklers within the transverse flue spaces nearest to the ignition location were at the top of the sixth tier level; the sprinkler under the catwalk at the top of the sixth tier level was located a horizontal distance of 15 in. (381 mm) away from the ignition location. The sprinkler under the catwalk at the top of the sixth tier level was the first sprinkler to operate at a time 2 minutes and 49 seconds after ignition. A total of 3 in-rack sprinklers and 1 catwalk sprinkler operated during this test; no ceiling-level sprinklers operated. The results of the test were considered acceptable.

In Test No. 2, ignition was at grade level at a rack upright, 2 ft (0.6 m) horizontally from the rack face. The in-rack sprinkler within the transverse flue space of fire origin was at the top of the sixth tier level. The in-rack sprinkler directly over the ignition location was the first sprinkler to operate at a time 2 minutes and 9 seconds after ignition. A total of 2 in-rack sprinklers operated during this test; no ceiling-level sprinklers operated. The results of the test were considered acceptable.

In Test No. 3, ignition was at grade level, centered between rack uprights within the 2 in. (0.6 m) gap. To allow vertical fire growth directly above the point of ignition, the gap was maintained open throughout the height of the storage rack. A total of 4 in-rack sprinklers and 1 sprinkler under a catwalk operated during the test; no ceiling-level sprinklers operated. The first in-rack sprinkler to operate was located at the top of the sixth tier level at a time 3 minutes and 1 second after ignition. The second in-rack sprinkler to operate was also at the top of the sixth tier level. The last 2 in-rack sprinklers to operate were both located at the top of the third tier level. The fifth and final sprinkler to operate was a sprinkler located under a catwalk at the top of the third tier level. The results of the test were considered acceptable.

All three tests were considered successful and confirmed that the ceiling and in-rack sprinkler protection scheme outlined in this standard for the protection of cartoned records storage maintained in multiple-row racks with catwalk access is acceptable.

Annex D Sprinkler System Information from the 2012 Edition of the *Life Safety Code*

This annex is not a part of the requirements of this NFPA document but is included for informational purposes only.

D.1 Introduction. This annex is provided as an aid to the user of NFPA 13 by identifying those portions of the 2012 edition of NFPA *101* that pertain to sprinkler system design and installation. It is not intended that this annex provide complete information regarding all aspects of fire protection addressed by NFPA *101*. It is important to note that this information was not copied from NFPA *101* using NFPA's extract policy and is not intended to be a part of the requirements of NFPA 13.

D.1.1 The following sections cover situations where NFPA *101* provides different guidance on the design or installation of a fire sprinkler system from NFPA 13. In some cases, this different guidance is based on descriptions of unique situations handled by NFPA *101*. In other cases, this different guidance stems from the different objective for NFPA *101*, life safety of the occupant, rather than the property protection afforded by NFPA 13.

D.1.1.1 Features of Fire Protection.

D.1.1.1.1 Atriums. Glass walls and inoperable windows shall be permitted in lieu of the fire barriers where all the following are met:

(1) Automatic sprinklers are spaced along both sides of the glass wall and the inoperable windows at intervals not to exceed 6 ft (1830 mm).

Copyright 2014 National Fire Protection Association (NFPA). Licensed, by agreement, for individual use and download on October 4, 2014 to LEADER and READER for designated user PATTARAPORN SRITRAKOOL. No other reproduction or transmission in any form permitted without written permission of NFPA. For inquires or to report unauthorized use, contact licensing@nfpa.org.

(2) The automatic sprinklers specified in 8.6.7(1)(c)(i) of NFPA *101* are located at a distance from the glass wall not to exceed 12 in. (305 mm) and arranged so that the entire surface of the glass is wet upon operation of the sprinklers.
(3) The glass wall is of tempered, wired, or laminated glass held in place by a gasket system that allows the glass framing system to deflect without breaking (loading) the glass before the sprinklers operate.
(4) The automatic sprinklers required by 8.6.7(1)(c)(i) of NFPA *101* are not required on the atrium side of the glass wall and the inoperable window where there is no walkway or other floor area on the atrium side above the main floor level. [***101***:8.6.7(1)(c)]

D.1.1.2 Special Structures and High-Rise Buildings.

D.1.1.2.1 High-rise buildings shall be protected throughout by an approved, supervised automatic sprinkler system in accordance with NFPA *101*, Section 9.7. A sprinkler control valve and a waterflow device shall be provided for each floor. [***101***:11.8.3.1]

D.1.1.3 Lodging or Rooming Houses.

D.1.1.3.1 In buildings sprinklered in accordance with NFPA 13, closets that contain equipment such as washers, dryers, furnaces, or water heaters shall be sprinklered regardless of size. [***101***:26.3.6.3.5]

D.1.1.3.2 In existing lodging or rooming houses, sprinkler installations shall not be required in closets not exceeding 24 ft^2 (2.2 m^2) and in bathrooms not exceeding 55 ft^2 (5.1 m^2). [***101***:26.3.6.3.6]

D.1.1.4 New Hotels and Dormitories.

D.1.1.4.1 The provisions for draft stops and closely spaced sprinklers in NFPA 13 shall not be required for openings complying with NFPA *101*, 8.6.9.1, where the opening is within the guest room or guest suite. [***101***:28.3.5.4]

D.1.1.4.2 Listed quick-response or listed residential sprinklers shall be used throughout guest rooms and guest room suites. [***101***:28.3.5.6]

D.1.1.5 Existing Hotels and Dormitories.

D.1.1.5.1 In guest rooms and in guest room suites, sprinkler installations shall not be required in closets not exceeding 24 ft^2 (2.2 m^2) and in bathrooms not exceeding 55 ft^2 (5.1 m^2). [***101***:29.3.5.5]

D.1.1.6 New Apartment Buildings.

D.1.1.6.1 In buildings sprinklered in accordance with NFPA 13, closets less than 12 ft^2 (1.1 m^2) in area in individual dwelling units shall not be required to be sprinklered. Closets that contain equipment such as washers, dryers, furnaces, or water heaters shall be sprinklered regardless of size. [***101***:30.3.5.3]

D.1.1.6.2 Listed quick-response or listed residential sprinklers shall be used throughout all dwelling units. [***101***:30.3.5.5]

D.1.1.6.3 The draft stop and closely spaced sprinkler requirements of NFPA 13 shall not be required for convenience openings complying with NFPA *101*, 8.6.9.1, where the convenience opening is within the dwelling unit. [***101***:30.3.5.4]

D.1.1.7 Existing Apartment Buildings.

D.1.1.7.1 In individual dwelling units, sprinkler installation shall not be required in closets not exceeding 24 ft^2 (2.2 m^2) and in bathrooms not exceeding 55 ft^2 (5.1 m^2). Closets that contain equipment such as washers, dryers, furnaces, or water heaters shall be sprinklered regardless of size. [***101***:31.3.5.3]

D.1.1.7.2 The draft stop and closely spaced sprinkler requirements of NFPA 13 shall not be required for convenience openings complying with NFPA *101*, 8.6.9.1, where the convenience opening is within the dwelling unit. [***101***:31.3.5.4]

D.1.1.8 Existing Residential Board and Care Occupancies.

D.1.1.8.1 Standard response sprinklers shall be permitted for use in hazardous areas in accordance with NFPA *101*, 33.2.3.2. [***101***:33.2.2.2.4]

D.1.1.8.2 Where an automatic sprinkler system is installed, for either total or partial building coverage, all of the following requirements shall be met:

(1) The system shall be in accordance with NFPA *101*, Section 9.7, and shall initiate the fire alarm system in accordance with 33.2.3.4.1, as modified by 33.2.3.5.3.1 through 33.2.3.5.3.6 of NFPA *101*
(2) The adequacy of the water supply shall be documented to the authority having jurisdiction.

[***101***:33.2.3.5.3]

D.1.1.8.2.1 In prompt evacuation capability facilities, all of the following shall apply:

(1) An automatic sprinkler system in accordance with NFPA 13D shall be permitted.
(2) Automatic sprinklers shall not be required in closets not exceeding 24 ft^2 (2.2 m^2) and in bathrooms not exceeding 55 ft^2 (5.1 m^2), provided that such spaces are finished with lath and plaster or materials providing a 15-minute thermal barrier.

[***101***:33.2.3.5.3.1]

D.1.1.8.2.2 In slow and impractical evacuation capability facilities, all of the following shall apply:

(1) An automatic sprinkler system in accordance with NFPA 13D with a 30-minute water supply, shall be permitted.
(2) All habitable areas and closets shall be sprinklered.
(3) Automatic sprinklers shall not be required in bathrooms not exceeding 55 ft^2 (5.1 m^2), provided that such spaces ster or materials providing a 15-minute thermal barrier.

[***101***:33.2.3.5.3.2]

D.1.1.8.2.3 In prompt and slow evacuation capability facilities, where an automatic sprinkler system is in accordance with NFPA 13, sprinklers shall not be required in closets not exceeding 24 ft^2 (2.2 m^2) and in bathrooms not exceeding 55 ft^2 (5.1 m^2), provided that such spaces are finished with lath and plaster or materials providing a 15-minute thermal barrier. [***101***:33.2.3.5.3.3]

D.1.1.8.2.4 In prompt and slow evacuation capability facilities in buildings four or fewer stories above grade plane, systems in accordance with NFPA 13R shall be permitted. [***101***:33.2.3.5.3.4]

D.1.1.8.2.5 In impractical evacuation capability facilities in buildings four or fewer stories above grade plane, systems in accordance with NFPA 13R shall be permitted. All habitable areas and closets shall be sprinklered. Automatic sprinklers shall not be required in bathrooms not exceeding 55 ft^2 (5.1 m^2), provided that such spaces are finished with lath and plaster or materials providing a 15-minute thermal barrier. [***101***:33.2.3.5.3.5]

Copyright 2014 National Fire Protection Association (NFPA). Licensed, by agreement, for individual use and download on October 4, 2014 to LEADER and READER for designated user PATTARAPORN SRITRAKOOL. No other reproduction or transmission in any form permitted without written permission of NFPA. For inquires or to report unauthorized use, contact licensing@nfpa.org.

D.1.1.8.2.6 Initiation of the fire alarm system shall not be required for existing installations in accordance with NFPA *101*, 33.2.3.5.6. [***101*:**33.2.3.5.3.6]

D.1.1.8.2.7 All impractical evacuation capability facilities shall be protected throughout by an approved, supervised automatic sprinkler system in accordance with NFPA *101*, 33.2.3.5.3. [***101*:**33.2.3.5.3.7]

D.1.1.9 New Mercantile Occupancies.

D.1.1.9.1 Protection of Vertical Openings. Any vertical opening shall be protected in accordance with NFPA *101*, Section 8.6, except under the following conditions:

(1) In Class A or Class B mercantile occupancies protected throughout by an approved, supervised automatic sprinkler system in accordance with NFPA *101*, 9.7.1.1(1), unprotected vertical openings shall be permitted at one of the following locations:
   (a) Between any two floors
   (b) Among the street floor, the first adjacent floor below, and adjacent floor (or mezzanine) above
(2) In Class C mercantile occupancies, unprotected openings shall be permitted between the street floor and the mezzanine.
(3) The draft stop and closely spaced sprinkler requirements of NFPA 13 shall not be required for unenclosed vertical openings permitted in NFPA *101*, 36.3.1(1) and (2).

[***101*:**36.3.1]

D.1.1.9.2 Rooms housing building service equipment, janitor closets, and service elevators shall be permitted to open directly onto exit passageways, provided that the following criteria are met:

(1) The required fire resistance rating between such rooms or areas and the exit passageway shall be maintained in accordance with NFPA *101*, 7.1.3.2.
(2) Such rooms or areas shall be protected by an approved, supervised automatic sprinkler system in accordance with NFPA *101*, 9.7.1.1(1) but the exceptions in NFPA 13 allowing the omission of sprinklers from such rooms shall not be permitted.

[***101*:**36.4.4.6.2]

D.1.1.10 Existing Mercantile Occupancies.

D.1.1.10.1 Protection of Vertical Openings. Any vertical opening shall be protected in accordance with NFPA *101*, Section 8.6, except under the following conditions:

(1) In Class A or Class B mercantile occupancies protected throughout by an approved, supervised automatic sprinkler system in accordance with NFPA *101*, 9.7.1.1(1), unprotected vertical openings shall be permitted at one of the following locations:
   (a) Between any two floors
   (b) Among the street floor, the first adjacent floor below, and adjacent floor (or mezzanine) above
(2) In Class C mercantile occupancies, unprotected openings shall be permitted between the street floor and the mezzanine.
(3) The draft stop and closely spaced sprinkler requirements of NFPA 13 shall not be required for unenclosed vertical openings permitted in NFPA *101*, 37.3.1(1) and (2).

[***101*:**37.3.1]

D.1.1.10.2 Rooms housing building service equipment, janitor closets, and service elevators shall be permitted to open directly onto exit passageways, provided that the following criteria are met:

(1) The required fire resistance rating between such rooms or areas and the exit passageway shall be maintained in accordance with NFPA *101*, 7.1.3.2.
(2) Such rooms or areas shall be protected by an approved automatic sprinkler system in accordance with NFPA *101*, 9.7.1.1(1) but the exceptions in NFPA 13 allowing the omission of sprinklers from such rooms shall not be permitted.

[***101*:**37.4.4.6.2]

D.1.1.11 Industrial Occupancies.

D.1.1.11.1 Special Provisions — High-Rise Buildings. The provisions of NFPA *101*, 11.8.5.2.4(2) for jockey pumps and NFPA *101*, 11.8.5.2.4(3) for air compressors serving dry-pipe and pre-action systems shall not apply to special-purpose industrial occupancies. [***101*:**40.4.1]

D.2 Life Safety Code.

D.2.1 Features of Fire Protection.

D.2.1.1 Design Requirements. (Reserved)

D.2.1.2 Installation Requirements.

D.2.1.2.1 Atriums. Glass walls and inoperable windows shall be permitted in lieu of the fire barriers where all the following are met:

(1) Automatic sprinklers are spaced along both sides of the glass wall and the inoperable window at intervals not to exceed 6 ft (1830 mm).
(2) The automatic sprinklers specified in NFPA *101*, 8.6.7(1)(c)(i) are located at a distance from the glass wall not to exceed 12 in. (305 mm) and arranged so that the entire surface of the glass is wet upon operation of the sprinklers.
(3) The glass wall is of tempered, wired, or laminated glass held in place by a gasket system that allows the glass framing system to deflect without breaking (loading) the glass before the sprinklers operate.
(4) The automatic sprinklers required by NFPA *101*, 8.6.7(1)(c)(i) are not required on the atrium side of the glass wall and the inoperable window where there is no walkway or other floor area on the atrium side above the main floor level. [***101*:**8.6.7(1)(c)]

D.2.2 Special Structures and High-Rise Buildings.

D.2.2.1 Design Criteria.

D.2.2.1.1 High-rise buildings shall be protected throughout by an approved, supervised automatic sprinkler system in accordance with NFPA *101*, Section 9.7. A sprinkler control valve and a waterflow device shall be provided for each floor. [***101*:**11.8.3.1]

D.2.3 New Assembly Occupancies.

D.2.3.1 Design Criteria.

Copyright 2014 National Fire Protection Association (NFPA). Licensed, by agreement, for individual use and download on October 4, 2014 to LEADER and READER for designated user PATTARAPORN SRITRAKOOL. No other reproduction or transmission in any form permitted without written permission of NFPA. For inquires or to report unauthorized use, contact licensing@nfpa.org.

D.2.3.1.1 Protection of Vertical Openings. Any vertical opening shall be enclosed or protected in accordance with Section 8.6 of NFPA *101*, unless otherwise permitted by one of the following:

(1) Stairs or ramps shall be permitted to be unenclosed between balconies or mezzanines and main assembly areas located below, provided that the balcony or mezzanine is open to the main assembly area.
(2) Exit access stairs from lighting and access catwalks, galleries, and gridirons shall not be required to be enclosed.
(3) Assembly occupancies protected by an approved, supervised automatic sprinkler system in accordance with Section 9.7 of NFPA *101* shall be permitted to have unprotected vertical openings between any two adjacent floors, provided that such openings are separated from unprotected vertical openings serving other floors by a barrier complying with 8.6.5 of NFPA 101.
(4) Assembly occupancies protected by an approved, supervised automatic sprinkler system in accordance with Section 9.7 of NFPA *101* shall be permitted to have convenience stair openings in accordance with 8.6.9.2 of NFPA *101*.

[***101:***12.3.1]

D.2.3.2 Installation Requirements. (Reserved)

D.2.4 Existing Assembly Occupancies.

D.2.4.1 Design Criteria.

D.2.4.1.1 Protection of Vertical Openings. Any vertical opening shall be enclosed or protected in accordance with NFPA *101*, Section 8.6, unless otherwise permitted by one of the following:

(1) Stairs or ramps shall be permitted to be unenclosed between balconies or mezzanines and main assembly areas located below, provided that the balcony or mezzanine is open to the main assembly area.
(2) Exit access stairs from lighting and access catwalks, galleries, and gridirons shall not be required to be enclosed.
(3) Assembly occupancies protected by an approved, supervised automatic sprinkler system in accordance with NFPA *101*, Section 9.7, shall be permitted to have unprotected vertical openings between any two adjacent floors, provided that such openings are separated from unprotected vertical openings serving other floors by a barrier complying with NFPA *101*, 8.6.5.
(4) Assembly occupancies protected by an approved, supervised automatic sprinkler system in accordance with NFPA *101*, Section 9.7, shall be permitted to have convenience stair openings in accordance with NFPA *101*, 8.6.9.2.

[***101:***13.3.1]

D.2.4.2 Installation Requirements. (Reserved)

D.2.5 New Educational Occupancies. (Reserved)

D.2.6 Existing Educational Occupancies. (Reserved)

D.2.7 New Day-Care Occupancies. (Reserved)

D.2.8 Existing Day-Care Occupancies. (Reserved)

D.2.9 New Health Care Occupancies. (Reserved)

D.2.10 Existing Health Care Occupancies. (Reserved)

D.2.11 New Ambulatory Health Care Occupancies. (Reserved)

D.2.12 Existing Ambulatory Health Care Occupancies. (Reserved)

D.2.13 New Detention and Correctional Occupancies. (Reserved)

D.2.14 Existing Detention and Correctional Occupancies. (Reserved)

D.2.15 One- and Two-Family Dwellings. (Reserved)

D.2.16 Lodging or Rooming Houses.

D.2.16.1 Design Requirements. (Reserved)

D.2.16.2 Installation Requirements.

D.2.16.2.1 In buildings sprinklered in accordance with NFPA 13, closets that contain equipment such as washers, dryers, furnaces, or water heaters shall be sprinklered, regardless of size. [***101:***26.3.6.3.5]

D.2.16.2.2 In existing lodging or rooming houses, sprinkler installations shall not be required in closets not exceeding 24 ft^2 (2.2 m^2) and in bathrooms not exceeding 55 ft^2 (5.1 m^2). [***101:***26.3.6.3.6]

D.2.17 New Hotels and Dormitories.

D.2.17.1 Design Requirements. (Reserved)

D.2.17.2 Installation Requirements.

D.2.17.2.1 The provisions for draft stops and closely spaced sprinklers in NFPA 13 shall not be required for openings complying with NFPA *101*, 8.6.9.1, where the opening is within the guest room or guest suite. [***101:***28.3.5.4]

D.2.17.2.2 Listed quick-response or listed residential sprinklers shall be used throughout guest rooms and guest room suites. [***101:***28.3.5.6]

D.2.18 Existing Hotels and Dormitories.

D.2.18.1 Design Requirements. (Reserved)

D.2.18.2 Installation Requirements.

D.2.18.2.1 In guest rooms and in guest room suites, sprinkler installations shall not be required in closets not exceeding 24 ft^2 (2.2 m^2) and in bathrooms not exceeding 55 ft^2 (5.1 m^2). [***101:***29.3.5.5]

D.2.19 New Apartment Buildings.

D.2.19.1 Design Requirements. (Reserved)

D.2.19.2 Installation Requirements.

D.2.19.2.1 In buildings sprinklered in accordance with NFPA 13, closets less than 12 ft^2 (1.1 m^2) in area in individual dwelling units shall not be required to be sprinklered. Closets that contain equipment such as washers, dryers, furnaces, or water heaters shall be sprinklered regardless of size. [***101:***30.3.5.3]

D.2.19.2.2 Listed quick-response or listed residential sprinklers shall be used throughout all dwelling units. [***101:***30.3.5.5]

D.2.19.2.3 The draft stop and closely spaced sprinkler requirements of NFPA 13 shall not be required for convenience openings complying with NFPA *101*, 8.6.9.1, where the convenience opening is within the dwelling unit. [***101:***30.3.5.4]

D.2.20 Existing Apartment Buildings.

D.2.20.1 Design Requirements. (Reserved)

D.2.20.2 Installation Requirements.

D.2.20.2.1 In individual dwelling units, sprinkler installation shall not be required in closets not exceeding 24 ft^2 (2.2 m^2)

Copyright 2014 National Fire Protection Association (NFPA). Licensed, by agreement, for individual use and download on October 4, 2014 to LEADER and READER for designated user PATTARAPORN SRITRAKOOL. No other reproduction or transmission in any form permitted without written permission of NFPA. For inquires or to report unauthorized use, contact licensing@nfpa.org.

and in bathrooms not exceeding 55 ft^2 (5.1 m^2). Closets that contain equipment such as washers, dryers, furnaces, or water heaters shall be sprinklered, regardless of size. [***101*:**31.3.5.3]

D.2.20.2.2 The draft stop and closely spaced sprinkler requirements of NFPA 13 shall not be required for convenience openings complying with NFPA *101*, 8.6.9.1, where the convenience opening is within the dwelling unit. [***101*:**31.3.5.4]

D.2.21 New Residential Board and Care Occupancies. (Reserved)

D.2.22 Existing Residential Board and Care Occupancies.

D.2.22.1 Design Requirements. (Reserved)

D.2.22.2 Installation Requirements.

D.2.22.2.1 Standard-response sprinklers shall be permitted for use in hazardous areas in accordance with NFPA *101*, 33.2.3.2. [***101*:**33.2.2.2.4]

D.2.22.2.2 In prompt and slow evacuation facilities, where an automatic sprinkler system is in accordance with NFPA 13 sprinklers shall not be required in closets not exceeding 24 ft^2 (2.2 m^2) and in bathrooms not exceeding 55 ft^2 (5.1 m^2), provided that such spaces are finished with lath and plaster or materials providing a 15-minute thermal barrier. [***101*:**33.2.3.5.3.3]

D.2.23 New Mercantile Occupancies.

D.2.23.1 Design Requirements. (Reserved)

D.2.23.2 Installation Requirements.

D.2.23.2.1 Protection of Vertical Openings. Any vertical opening shall be protected in accordance with NFPA *101*, Section 8.6, except under the following conditions:

(1) In Class A or Class B mercantile occupancies protected throughout by an approved, supervised automatic sprinkler system in accordance with NFPA *101*, 9.7.1.1(1), unprotected vertical openings shall be permitted at one of the following locations:
   (a) Between any two floors
   (b) Among the street floor, the first adjacent floor below, and adjacent floor (or mezzanine) above
(2) In Class C mercantile occupancies, unprotected openings shall be permitted between the street floor and the mezzanine.
(3) The draft stop and closely spaced sprinkler requirements of NFPA 13 shall not be required for unenclosed vertical openings permitted in NFPA *101*, 36.3.1(1) and (2).

[***101*:**36.3.1]

D.2.23.2.2 Rooms housing building service equipment, janitor closets, and service elevators shall be permitted to open directly onto exit passageways, provided that the following criteria are met:

(1) The required fire resistance rating between such rooms or areas and the exit passageway shall be maintained in accordance with NFPA *101*, 7.1.3.2.
(2) Such rooms or areas shall be protected by an approved, supervised automatic sprinkler system in accordance with NFPA *101*, 9.7.1.1(1) but the exceptions in NFPA 13 allowing the omission of sprinklers from such rooms shall not be permitted.

[***101*:**36.4.4.6.2]

D.2.24 Existing Mercantile Occupancies.

D.2.24.1 Design Requirements. (Reserved)

D.2.24.2 Installation Requirements.

D.2.24.2.1 Protection of Vertical Openings. Any vertical opening shall be protected in accordance with NFPA *101*, Section 8.6, except under the following conditions:

(1) In Class A or Class B mercantile occupancies protected throughout by an approved, supervised automatic sprinkler system in accordance with NFPA *101*, 9.7.1.1(1), unprotected vertical openings shall be permitted at one of the following locations:
   (a) Between any two floors
   (b) Among the street floor, the first adjacent floor below, and adjacent floor (or mezzanine) above
(2) In Class C mercantile occupancies, unprotected openings shall be permitted between the street floor and the mezzanine.
(3) The draft stop and closely spaced sprinkler requirements of NFPA 13 shall not be required for unenclosed vertical openings permitted in NFPA *101*, 37.3.1(1) and (2). [***101*:**37.3.1]

D.2.24.2.2 Rooms housing building service equipment, janitor closets, and service elevators shall be permitted to open directly onto exit passageways, provided that the following criteria are met:

(1) The required fire resistance rating between such rooms or areas and the exit passageway shall be maintained in accordance with NFPA *101*, 7.1.3.2.
(2) Such rooms or areas shall be protected by an approved, supervised automatic sprinkler system in accordance with NFPA *101*, 9.7.1.1(1), but the exceptions in NFPA 13 allowing the omission of sprinklers from such rooms shall not be permitted. [***101*:**37.4.4.6.2]

D.2.25 New Business Occupancies.

D.2.25.1 Design Requirements. (Reserved)

D.2.25.2 Installation Requirements. (Reserved)

D.2.26 Existing Business Occupancies.

D.2.26.1 Design Requirements. (Reserved)

D.2.26.2 Installation Requirements. (Reserved)

D.2.27 Industrial Occupancies. (Reserved)

D.2.27.1 Design Criteria.

D.2.27.1.1 Special Provisions — High-Rise Buildings. The provisions of NFPA *101*, 11.8.5.2.4(2), for jockey pumps and NFPA *101*, 11.8.5.2.4(3), for air compressors serving dry-pipe and pre-action systems shall not apply to special-purpose industrial occupancies. [***101*:**40.4.1]

D.2.28 Storage Occupancies. (Reserved)

Annex E Development of the Design Approach to Conform with SEI/ASCE 7

This annex is not a part of the requirements of this NFPA document but is included for informational purposes only.

E.1 Seismic design of nonstructural components is governed by the provisions of Chapter 13 of ASCE/SEI 7, *Minimum Design Loads for Buildings and Other Structures*. In ASCE/SEI 7, fire sprinkler piping is classified as a "Designated Seismic System," due to its critical safety function. Design

Copyright 2014 National Fire Protection Association (NFPA). Licensed, by agreement, for individual use and download on October 4, 2014 to LEADER and READER for designated user PATTARAPORN SRITRAKOOL. No other reproduction or transmission in any form permitted without written permission of NFPA. For inquires or to report unauthorized use, contact licensing@nfpa.org.

earthquake forces are multiplied by an Importance Factor, $I_p = 1.5$, and both the bracing and the piping itself must be designed for seismic forces.

The lateral sway bracing provisions of 9.3.5.5 were developed to allow the use of the concept of Zone of Influence (ZOI), while providing designs that comply with ASCE/SEI 7. One of the main changes between the current seismic sway bracing design approach adopted in NFPA 13 and the approach used in early editions of NFPA 13 is that the spacing of the sway braces can be constrained by the flexural capacity of the pipe, as well as the capacity of the brace assembly or the capacity of the connection between the brace assembly and the supporting structure. NFPA 13 provides a design that complies with the seismic design requirements of ASCE/SEI 7 for the pipe itself.

The ZOI approach yields the force demand on the bracing element and connections to the structure. Another way to look at a ZOI force is as a reaction in a system of continuous beams (i.e., the multiple spans of a piping system). By using conservative simplifying assumptions, a maximum ZOI force limited by the flexural capacity of the pipe can be developed for a given pipe size and span (spacing between horizontal sway braces). The method used to develop these maximum ZOI forces is described in the following paragraphs, along with a discussion of the assumptions on the geometry of the piping system, the determination of the seismic design force coefficients, and the flexural capacity of the pipe.

In the discussion that follows, the term "main" can be taken to mean a sprinkler main, either a feed main or a cross-main that requires sway bracing.

E.2 Assumptions on System Geometry. While every fire sprinkler system is uniquely designed for a particular structure, there are general similarities in the layout and geometry that can be used to simplify the design approach for earthquake protection. These similarities were used to develop assumptions on the effects of piping system continuity on the distribution of bending and shear forces in the pipe, and assumptions on spacing of branch lines between sway brace locations.

E.2.1 Continuity in Piping Systems. For lateral brace design purposes, piping systems can be idealized as a system of continuous beams. The bending moments in the sprinkler mains (the beams) were computed assuming three continuous spans, which generates the largest bending moment in any system of continuous beams. The loads generated by the branch lines are idealized as point loads. The tributary mass of the main is lumped along with the mass of the branch lines as point loads at the assumed branch line locations.

E.2.2 Branch Line Locations. In many sprinkler system installations, the branch lines constitute a substantial portion of the seismic mass. While there are significant variations in the spacing of the branch lines, their geometry is constrained by the need to provide adequate water coverage, which imposes limits on the spacing of the branches. Defining a "span" of the main as the distance between lateral sway braces, the seismic provisions make the following assumptions:

(1) There is a branch located at the center of the sprinkler main for spans of 25 ft or less.
(2) There are branches at third-points of the sprinkler main for spans greater than 25 ft and less than 40 ft.
(3) There are branches at quarter-points of the sprinkler main for spans of 40 ft.

It was further assumed that there is a branch line located in close proximity to each sway brace.

The layout of branch lines, maximum bending moment M_{max} in the pipe, and reaction R_{max} (horizontal loads at sway brace locations) for sprinkler mains with spans less than 25 ft is illustrated in Figure E.2.2(a). Maximum demands for spans greater than 25 ft and less than 40 ft are given in Figure E.2.2(b), and for spans of 40 ft in Figure E.2.2(c).

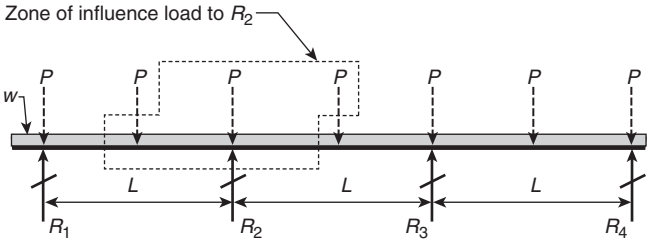

L = distance between sway braces (span)
P = branch line lateral load + tributary lateral load from main
w = lateral load of the main (included in P)
R_1, R_2, R_3, R_4 = zone of influence load (reactions)

$$M_{max} = 0.175PL$$
$$R_{max} \approx 2P$$

FIGURE E.2.2(a) Maximum Demands for Spans Less Than 25 ft.

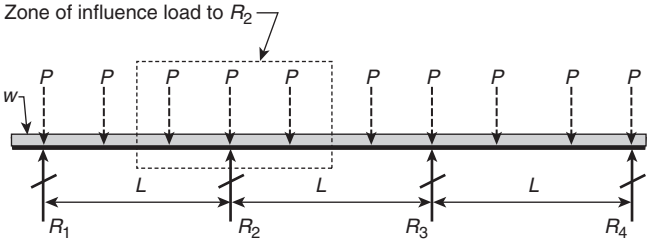

L = distance between sway braces (span)
P = branch line lateral load + tributary lateral load from main
w = lateral load of the main (included in P)
R_1, R_2, R_3, R_4 = zone of influence load (reactions)

$$M_{max} = 0.267PL$$
$$R_{max} \approx 3P$$

FIGURE E.2.2(b) Maximum Demands for Spans Greater Than 25 ft and Less Than 40 ft.

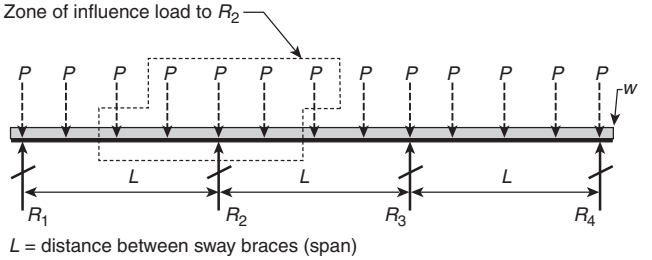

L = distance between sway braces (span)
P = branch line lateral load + tributary lateral load from main
w = lateral load of the main (included in P)
R_1, R_2, R_3, R_4 = zone of influence load (reactions)

$$M_{max} = 0.372PL$$
$$R_{max} \approx 4P$$

FIGURE E.2.2(c) Maximum Demands for Spans of 40 ft.

Copyright 2014 National Fire Protection Association (NFPA). Licensed, by agreement, for individual use and download on October 4, 2014 to LEADER and READER for designated user PATTARAPORN SRITRAKOOL. No other reproduction or transmission in any form permitted without written permission of NFPA. For inquires or to report unauthorized use, contact licensing@nfpa.org.

E.3 Computing the Seismic Demand on Piping Systems. In ASCE/SEI 7, seismic demands on nonstructural components and systems are a function of the ground shaking intensity, the ductility and dynamic properties of the component or system, and the height of attachment of the component in the structure. Seismic forces are determined at strength design (SD) levels. The horizontal seismic design force is given by

$$F_p = \frac{0.4 a_p S_{DS} W_p}{\left(\frac{R_p}{I_p}\right)}\left(1 + 2\frac{z}{h}\right)$$

where:

F_p = seismic design force
S_{DS} = short period spectral acceleration, which takes into account soil conditions at the site
a_p = component amplification factor, taken as 2.5 for piping systems
I_p = component importance factor, taken as 1.5 for fire sprinkler systems
z = height of the component attachment to the structure
h = average roof height of the structure
W_p = component operating weight
R_p = component response modification factor as follows:
R_p = 9 for high-deformability piping with joints made by welding or brazing
R_p = 4.5 for high- or limited-deformability piping with joints made by threading, bonding, compression couplings, or grooved couplings
R_p = 1.5 for low-deformability piping such as cast iron and nonductile plastics

F_p need not be greater than 1.6 $S_{DS} I_p W_p$ and cannot be less than 0.30 $S_{DS} I_p W_p$.

As illustrated in Figure E.3, NFPA 13 uses a simplified seismic factor, C_p, which combines ground shaking S_{DS}, dynamic amplification a_p, component response R_p/I_p, and location in the building (z/h) into a single variable. Conservative assumptions are made for each variable, so that the only information needed to find C_p is the short-period mapped spectral acceleration for the Maximum Considered Earthquake (MCE), S_s.

The importance factor (I_p) for fire sprinkler systems is specified in ASCE/SEI 7 as 1.5. The amplification factor (a_p) for piping systems is specified as 2.5. Piping systems (even when seismically braced) are considered flexible, since the fundamental period of vibration for the system is greater than 0.06 seconds. A component response factor of R_p = 4.5 was assumed for all piping. Finally, it was assumed that the system is installed at the roof level, h.

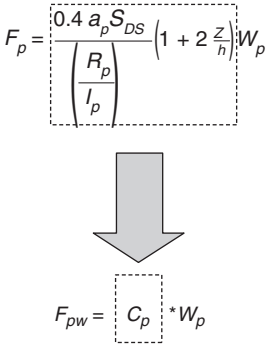

FIGURE E.3 Simplified Seismic Factor, C_p.

Assume the system is laterally braced at the roof, $z = h$ and substitute these values into the lateral force equation

$$F_p = \frac{0.4 a_p S_{DS} W_p}{\left(\frac{R_p}{I_p}\right)}\left(1 + 2\frac{z}{h}\right) = \frac{0.4(2.5) S_{DS} W_p}{\left(\frac{4.5}{1.5}\right)}\left(1 + 2\frac{h}{h}\right) = (1.0) S_{DS} W_p$$

ASCE/SEI 7 forces are determined at the strength design (SD) level. NFPA 13 is based on Allowable Stress Design (ASD). To convert F_p to an ASD load, F_{pw}, the load from ASCE/SEI 7 is multiplied by a 0.7 load factor.

$$F_{pw} = 0.7 F_p = 0.7 S_{DS} W_p = C_p W_p$$

Solving for C_p,

$$C_p = 0.7 S_{DS}$$

The short-period spectral acceleration, S_{DS}, is obtained by modifying the mapped short-period spectral acceleration, S_S, for the effects of the local soil conditions. In the United States, values for S_S are obtained from seismic hazard maps published by the U.S. Geological Survey (USGS). Free software available from USGS will generate values for S_S based on the latitude and longitude of the project site. The spectral acceleration used for seismic design is determined by

$$-S_{DS} = \frac{2}{3} S_s F_a$$

F_a is an amplification factor based on soil conditions and the intensity of ground shaking expected (measured by S_S). Soil conditions are defined by site classification, ranging from Site Class A (hard rock) to Site Class F (extremely soft soils and fill). The values of F_a are given in ASCE/SEI 7 Table 11.4-1 and vary from 0.8 to 2.5. For the purposes of the ZOI method, the values of F_a are taken as the maximum tabulated values and are summarized in Table E.3.

Table E.3 Values of F_a

	Mapped Maximum Considered Earthquake Spectral Response Acceleration Parameter at Short Period					
	$S_S \leq$ 0.33	**$S_S =$ 0.5**	**$S_S =$ 0.75**	**$S_S =$ 0.95**	**$S_S =$ 1.0**	**$S_S \geq$ 1.25**
F_a	2.24	1.7	1.2	1.1	1.1	1.0

Note: Use straight-line interpolation for intermediate values of S_S.

$$C_p = 0.7 S_{DS} = \frac{2}{3}(0.7 S_s F_a) = 0.467 S_s F_a$$

Table 9.3.5.9.3 was populated by solving for C_p for different values of S_S. For example when S_S = 1.0

$$C_p = 0.467 S_s F_a = 0.467(1.0)(1.1) = 0.51$$

Copyright 2014 National Fire Protection Association (NFPA). Licensed, by agreement, for individual use and download on October 4, 2014 to LEADER and READER for designated user PATTARAPORN SRITRAKOOL. No other reproduction or transmission in any form permitted without written permission of NFPA. For inquires or to report unauthorized use, contact licensing@nfpa.org.

E.4 Flexural Capacity of Piping. The flexural capacity for different diameters and thicknesses of pipe were computed using Allowable Stress Design (ASD). NFPA 13 has traditionally used ASD for design. While ASCE/SEI 7 generally uses the Strength Design (SD) approach, ASD is preferred for the design of piping systems. For example, the ASTM B 31, *Standards of Pressure Piping*, series of piping codes are based on ASD. ASD was chosen for sprinkler piping design to limit the complexity of the analysis. Use of SD would require the use of the plastic modulus, *Z*, of the pipe rather than the elastic section modulus, *S*. Use of *Z* would trigger analysis of local and global buckling behavior of the pipe. SD is most appropriate when used with compact pipe sections that can develop the full limit capacity of the material, including strain hardening. Thin-wall pipes and materials without well defined post-elastic behavior are not easily considered using SD.

Permissible stresses in the pipe for seismic loading are from 13.6.11 of ASCE/SEI 7. Assuming high- or limited-deformability pipe with threaded or grooved couplings, the permissible flexural stress under SD level demands is $0.7F_y$, where F_y is the yield stress of the material. Since seismic design in NFPA 13 is based on ASD, the SD capacity must be reduced to an ASD level.

The permissible flexural stress for ASD is determined by adjusting the SD level flexural capacity. The SD capacity is first reduced by a load factor to ASD levels, and then can be increased by the allowable stress increase for seismic loading. The use of an allowable stress increase for piping systems is typical when determining the strength of the pipe itself.

For fire sprinkler piping, the SD flexural capacity, M_{cap}, is reduced by a load factor of 0.7 to yield the ASD flexural capacity. The duration of load factor for the piping system, taken as 1.33, is then applied. Taking *S* as the section modulus of pipe, this yields an allowable moment capacity in the pipe.

$$M_{cap} = 0.7(1.33)\left(0.7SF_y\right) = 0.65SF_y$$

To populate Table 9.3.5.5.2(a) through Table 9.3.5.5.2(e), which give the maximum Zone of Influence loads, the largest reaction (due to branch lines and the tributary mass of the main) limited by flexure for a given pipe size and span between sway braces was computed.

For example, to determine the maximum permissible ZOI for a 4 in. diameter steel Schedule 10 main spanning 30 ft, first compute the flexural capacity of the pipe.

$S = 1.76$ in.^{3}

$F_y = 30{,}000$ psi

The flexural capacity of the pipe is

$$M_{cap} = (0.65F_y)S = (0.65)(30{,}000)(1.76)$$

= 34,320 in.-lb = 2860 ft-lb

For spans greater than 25 ft and less than 40 ft, the branch lines are assumed to be located at ⅓-points in the span. The point load *P* is associated with the branch line and tributary mass of the main and *L* is distance between sway braces. From Figure E.2.2(b), the maximum moment in the main, M_{max}, is

$M_{max} = 0.267PL$

Setting $M_{cap} = M_{max}$ and solving for *P*,

$$M_{cap} = \left(0.65F_y\right)S = 0.267PL$$

$$P = \frac{M_{cap}}{0.267L}$$

$$= \frac{2860}{0.267(30) = 357 \text{ lb}}$$

The maximum permissible ZOI load = $3P$ = 1071 lb.

E.5 Sample Seismic Calculation using the ZOI Method. To illustrate the application of the ZOI method, the approach can be applied to a sample problem based on the sample seismic bracing calculation in Figure A.9.3.5(b). The sample calculation yielded a total weight of 480 lb, which was obtained using a seismic factor of 0.5. To determine our own seismic factor, to get the total weight of the water-filled pipe, divide by the seismic factor of 0.5,

$$W_p = \frac{480}{0.5} = 960 \text{ lb}$$

Assume the 4 in. Schedule 10 pipe is the main that will be braced and that distance between sway braces (span) is 20 ft. The installation is in a region of high seismicity, and based on the latitude and longitude of the building site, $S_S = 1.75$.

To calculate the seismic load, use Table 9.3.5.9.3 to determine the seismic coefficient, C_p. The value of $S_s = 1.75$ coordinates to 0.82.

The horizontal force on the brace, from 9.3.5.6.2 is

$$F_{pw} = C_pW_p = 0.82(960) = 787 \text{ lb}$$

From Table 9.3.5.5.2(a), the maximum ZOI load, F_{pw}, for a 4 in. Schedule 10 pipe spanning 20 ft is 1634 lb, which is larger than the calculated demand of 787 lb. The 4 in. Schedule 10 pipe is adequate for the seismic load and a brace would be selected with a minimum capacity of 787 lb.

If the sway brace was attached to the 2 in. Schedule 40 pipe, the ZOI demand F_{pw} of 787 lb would be compared to the maximum capacity for a 2 in. Schedule 40 pipe found in Table 9.3.5.5.2(a)(b). For a 20 ft span, this is 520 lb, less than the demand of 787 lb. A 2 in. pipe would be inadequate, and a sway brace would have to be added to reduce the ZOI demand, or the system pipe size increased.

E.6 Limitations of the ZOI Method. The ZOI approach can be used for a variety of piping materials. There are, however, important limitations of which the designer should be aware. The first is that the appropriate component response factor, R_p, must be used. To select the proper value, the piping systems must be classified as high-, limited-, or low-deformability. Definitions of these terms are given in Section 11.2 of ASCE/SEI 7. The second major assumption is that the flexural behavior of the pipe is not governed by local buckling of the pipe wall. For steel pipe, this can be achieved by observing the thickness to diameter limits given in the *AISC Specifications for the Design, Fabrication, and Erection of Structural Steel Buildings*. Establishing the local buckling characteristics of pipe fabricated from other materials can require testing.

The tables for the maximum load, F_{pw}, in zone of influence are based on common configurations of mains and branch lines. There can be cases where the actual configuration of the piping system could generate higher stresses in the piping than assumed in the tables. For example, a main braced at 40 ft intervals, with a single branch line in the center of the span, can have a smaller maximum load capacity, F_{pw}, than the tabulated value. Where the configuration of the mains and branch lines vary significantly from the assumed layout, the pipe stresses should be checked by engineering analysis.

Copyright 2014 National Fire Protection Association (NFPA). Licensed, by agreement, for individual use and download on October 4, 2014 to LEADER and READER for designated user PATTARAPORN SRITRAKOOL. No other reproduction or transmission in any form permitted without written permission of NFPA. For inquires or to report unauthorized use, contact licensing@nfpa.org.

Annex F Informational References

F.1 Referenced Publications. The documents or portions thereof listed in this annex are referenced within the informational sections of this standard and are not part of the requirements of this document unless also listed in Chapter 2 for other reasons.

F.1.1 NFPA Publications. National Fire Protection Association, 1 Batterymarch Park, Quincy, MA 02169-7471.

NFPA 1, *Fire Code*, 2012 edition.

NFPA 11, *Standard for Low-, Medium-, and High-Expansion Foam*, 2010 edition.

NFPA 12, *Standard on Carbon Dioxide Extinguishing Systems*, 2011 edition.

NFPA 13D, *Standard for the Installation of Sprinkler Systems in One- and Two-Family Dwellings and Manufactured Homes*, 2013 edition.

NFPA 13E, *Recommended Practice for Fire Department Operations in Properties Protected by Sprinkler and Standpipe Systems*, 2010 edition.

NFPA 13R, *Standard for the Installation of Sprinkler Systems in Low-Rise Residential Occupancies*, 2013 edition.

NFPA 14, *Standard for the Installation of Standpipe and Hose Systems*, 2010 edition.

NFPA 15, *Standard for Water Spray Fixed Systems for Fire Protection*, 2012 edition.

NFPA 16, *Standard for the Installation of Foam-Water Sprinkler and Foam-Water Spray Systems*, 2011 edition.

NFPA 20, *Standard for the Installation of Stationary Pumps for Fire Protection*, 2013 edition.

NFPA 22, *Standard for Water Tanks for Private Fire Protection*, 2008 edition.

NFPA 25, *Standard for the Inspection, Testing, and Maintenance of Water-Based Fire Protection Systems*, 2011 edition.

NFPA 33, *Standard for Spray Application Using Flammable or Combustible Materials*, 2011 edition.

NFPA 70®, *National Electrical Code®*, 2011 edition.

NFPA 72®, *National Fire Alarm and Signaling Code*, 2013 edition.

NFPA 75, *Standard for the Fire Protection of Information Technology Equipment*, 2013 edition.

NFPA 80A, *Recommended Practice for Protection of Buildings from Exterior Fire Exposures*, 2012 edition.

NFPA *101®*, *Life Safety Code®*, 2012 edition.

NFPA 120, *Standard for Fire Prevention and Control in Coal Mines*, 2010 edition.

NFPA 140, *Standard on Motion Picture and Television Production Studio Soundstages, Approved Production Facilities, and Production Locations*, 2008 edition.

NFPA 170, *Standard for Fire Safety and Emergency Symbols*, 2012 edition.

NFPA 204, *Standard for Smoke and Heat Venting*, 2012 edition.

NFPA 220, *Standard on Types of Building Construction*, 2012 edition.

NFPA 232, *Standard for the Protection of Records*, 2012 edition.

NFPA 259, *Standard Test Method for Potential Heat of Building Materials*, 2008 edition.

NFPA 291, *Recommended Practice for Fire Flow Testing and Marking of Hydrants*, 2013 edition.

NFPA 307, *Standard for the Construction and Fire Protection of Marine Terminals, Piers, and Wharves*, 2011 edition.

NFPA 409, *Standard on Aircraft Hangars*, 2011 edition.

NFPA 780, *Standard for the Installation of Lightning Protection Systems*, 2011 edition.

NFPA 851, *Recommended Practice for Fire Protection for Hydroelectric Generating Plants*, 2010 edition.

NFPA 2001, *Standard on Clean Agent Fire Extinguishing Systems*, 2012 edition.

NFPA Fire Protection Handbook

F.1.2 Other Publications.

F.1.2.1 ACI Publications. American Concrete Institute, P.O. Box 9094, Farmington Hills, MI 48333.

ACI 355.2, *Qualification of Post-Installed Mechanical Anchors in Concrete and Commentary*, 2007.

F.1.2.2 ACPA Publications. American Concrete Pipe Association, 222 W. Las Collinas Boulevard, Suite 641, Irving, TX 75039.

Concrete Pipe Handbook.

F.1.2.3 AISC Publications. American Institute of Steel Construction, One East Wacker Drive, Suite 700, Chicago, IL 60601-1802.

AISC 360, *Specification for Structural Steel Building,* 2010.

Specifications for the Design, Fabrication, and Erection of Structural Steel Buildings.

F.1.2.4 ASCE Publications. American Society of Civil Engineers, 1801 Alexander Bell Drive, Reston, VA 20191-4400.

SEI/ASCE 7, *Minimum Design Loads for Buildings and Other Structures,* 2010.

ASCE 19, *Standard Guidelines for the Structural Applications of Steel Cables for Buildings*, 1996.

F.1.2.5 ASME Publications. American Society of Mechanical Engineers, Three Park Avenue, New York, NY 10016-5990.

ASME A17.1, *Safety Code for Elevators and Escalators*, 1996.

ASME B16.1, *Cast-Iron Pipe Flanges and Flanged Fittings*, 1989.

ASME B1.20.1, *Pipe Threads, General Purpose (Inch)*, 1983.

F.1.2.6 ASTM Publications. ASTM International, 100 Barr Harbor Drive, P.O. Box C700, West Conshohocken, PA 19428-2959.

ASTM A 126, *Standard Specification for Gray Iron Casting for Valves, Flanges, and Pipe Fittings*, 1995.

ASTM A 135, *Standard Specification for Electric-Resistance-Welded Steel Pipe*, 1997.

ASTM A 197, *Standard Specification for Cupola Malleable Iron*, 1987.

ASTM A 307, *Standard Specification for Carbon Steel Bolts and Studs*, 1997.

ASTM A 603, *Standard Specification for Zinc-Coated Steel Structural Wire Rope*, 1998.

ASTM B 31, *Standards of Pressure Piping*, collection with various dates.

ASTM C 296, *Standard Specification for Asbestos-Cement Pressure Pipe*, 1988.

ASTM C 635, *Standard Specification for the Manufacture, Performance, and Testing of Metal Suspension Systems of Acoustical Tile and Lay-In Panel Ceilings*, 2004.

ASTM C 636, *Standard Practice for Installation of Metal Ceiling Suspension Systems for Acoustical Tile and Lay-In Panels,* 2004.

ASTM E 8, *Structural Test Method for Tension Testing of Metallic Materials*, 2001.

ASTM E 84, *Standard Test Method of Surface Burning Characteristics of Building Materials*, 2004.

ASTM E 119, *Standard Test Methods for Fire Tests of Building Construction and Materials*, 1998.

ASTM E 580, *Standard Practice for Installation of Ceiling Suspension Systems for Acoustical Tile and Lay-in Panels in Areas Subject to Earthquake Ground Motions*, 2008.

Copyright 2014 National Fire Protection Association (NFPA). Licensed, by agreement, for individual use and download on October 4, 2014 to LEADER and READER for designated user PATTARAPORN SRITRAKOOL. No other reproduction or transmission in any form permitted without written permission of NFPA. For inquires or to report unauthorized use, contact licensing@nfpa.org.

ASTM F 437, *Standard Specification for Threaded Chlorinated Poly (Vinyl Chloride) (CPVC) Plastic Pipe Fittings, Schedule 80*, 1996.

ASTM F 438, *Standard Specification for Socket-Type Chlorinated Poly (Vinyl Chloride) (CPVC) Plastic Pipe Fittings, Schedule 40*, 1997.

ASTM F 439, *Standard Specification for Socket-Type Chlorinated Poly (Vinyl Chloride) (CPVC) Plastic Pipe Fittings, Schedule 80*, 1997.

ASTM F 442, *Standard Specification for Chlorinated Poly (Vinyl Chloride) (CPVC) Plastic Pipe (SDR-PR)*, 1997.

F.1.2.7 AWWA Publications. American Water Works Association, 6666 West Quincy Avenue, Denver, CO 80235.

AWWA C104, *Cement Mortar Lining for Ductile Iron Pipe and Fittings for Water*, 2008.

AWWA C105, *Polyethylene Encasement for Ductile Iron Pipe Systems*, 2005.

AWWA C110, *Ductile Iron and Gray Iron Fittings, 3-in. Through 48-in., for Water and Other Liquids*, 2008.

AWWA C111, *Rubber-Gasket Joints for Ductile Iron Pressure Pipe and Fittings*, 2000.

AWWA C115, *Flanged Ductile Iron Pipe with Ductile Iron or Gray Iron Threaded Flanges*, 2005.

AWWA C116, *Protective Fusion-Bonded Epoxy Coatings for the Interior and Exterior Surfaces of Ductile-Iron and Gray Iron Fittings for Water Supply Service*, 2003.

AWWA C150, *Thickness Design of Ductile Iron Pipe*, 2008.

AWWA C151, *Ductile Iron Pipe, Centrifugally Cast for Water*, 2002.

AWWA C153, *Ductile Iron Compact Fittings, 3 in. through 24 in. and 54 in. through 64 in. for Water Service*, 2006.

AWWA C203, *Coal-Tar Protective Coatings and Linings for Steel Water Pipelines Enamel and Tape — Hot Applied*, 2002.

AWWA C205, *Cement-Mortar Protective Lining and Coating for Steel Water Pipe 4 in. and Larger — Shop Applied*, 2007.

AWWA C206, *Field Welding of Steel Water Pipe*, 2003.

AWWA C208, *Dimensions for Fabricated Steel Water Pipe Fittings*, 2007.

AWWA C300, *Reinforced Concrete Pressure Pipe, Steel-Cylinder Type* , 2004.

AWWA C301, *Prestressed Concrete Pressure Pipe, Steel-Cylinder Type* , 2007.

AWWA C302, *Reinforced Concrete Pressure Pipe, Non-Cylinder Type* , 2004.

AWWA C303, *Reinforced Concrete Pressure Pipe, Steel-Cylinder Type, Pretensioned* , 2002.

AWWA C400, *Standard for Asbestos-Cement Distribution Pipe, 4 in. Through 16 in. (100 mm Through 400 mm), for Water Distribution Systems*, 2003.

AWWA C401, *Standard Practice for the Selection of Asbestos-Cement Water Pipe*, 2003.

AWWA C600, *Standard for the Installation of Ductile-Iron Water Mains and Their Appurtenances*, 2005.

AWWA C602, *Cement-Mortar Lining of Water Pipe Lines 4 in. and Larger — in Place*, 2006.

AWWA C603, *Standard for the Installation of Asbestos-Cement Water Pipe*, 2005.

AWWA C606, *Grooved and Shouldered Joints*, 1997.

AWWA C900, *Polyvinyl Chloride (PVC) Pressure Pipe, 4 in. Through 12 in., for Water Distribution*, 2007.

AWWA M9, *Concrete Pressure Pipe*, 2008.

AWWA M11, *A Guide for Steel Pipe Design and Installation*, 2004.

AWWA M14, *Recommended Practice for Backflow Prevention and Cross Connection Control*, 2nd edition, 1990.

AWWA M41, *Ductile Iron and Pipe Fittings*, 2003.

F.1.2.8 DIPRA Publications. Ductile Iron Pipe Research Association, 245 Riverchase Parkway, East, Suite O, Birmingham, AL 35244.

Installation Guide for Ductile Iron Pipe.

Thrust Restraint Design for Ductile Iron Pipe.

F.1.2.9 EPRI Publications. EPRI, 3412 Hillview Avenue, Palo Alto, CA 94304.

Research Report 1843-2, "Turbine Generator Fire Protection by Sprinkler System," July 1985.

F.1.2.10 FM Publications. FM Global, 1301 Atwood Avenue, P.O. Box 7500, Johnston, RI 02919.

FM 1011/1012/1013, *Deluge and Preaction Sprinkler Systems*

FM 1020, *Automatic Water Control Valves*

FM 1021, *Dry Pipe Valves*

FM 1031, *Quick Opening Devices (Accelerators and Exhausters) for Dry Pipe Valves*

FM 1041, *Alarm Check Valves*

FM 1042, *Waterflow Alarm Indicators (Vane Type)*

FM 1045, *Waterflow Detector Check Valves*

FM 1112, *Indicating Valves (Butterfly or Ball Type)*

FM 1120, 1130, *Fire Service Water Control Valves (OS & Y and NRS Type Gate Valves)*

FM 1140, *Quick Opening Valves 1/4 Inch Through 2 Inch Nominal Size*

FM 1210, *Swing Check Valves*

FM 1362, *Pressure Reducing Valves*

FM 1610, *Ductile Iron Pipe and Fittings, Flexible Fittings and Couplings*

FM 1612, *Polyvinyl Chloride (PVC) Pipe and Fittings for Underground Fire Protection Service*

FM 1613, *Polyethylene (PE) Pipe and Fittings for Underground Fire Protection Service*

FM 1620, *Pipe Joints and Anchor Fittings for Underground Fire Service Mains*

FM 1630, *Steel Pipe for Automatic Fire Sprinkler Systems*

FM 1631, *Adjustable and Fixed Sprinkler Fittings ½ inch through 1 inch Nominal Size*

FM 1632, *Telescoping Sprinkler Assemblies for Use in Fire Protection Systems for Anechoic Chambers*

FM 1635, *Plastic Pipe & Fittings for Automatic Sprinkler Systems*

FM 1636, *Fire Resistant Barriers for Use with CPVC Pipe and Fittings in Light Hazard Occupancies*

FM 1637, *Flexible Sprinkler Hose with Fittings*

FM 1920, *Pipe Couplings and Fittings for Fire Protection Systems*

FM 1950, *Seismic Sway Brace Components for Automatic Sprinkler Systems*

FM 1951, 1952, 1953, *Pipe Hanger Components for Automatic Sprinkler Systems*

FM 2000, *Automatic Control Mode Sprinklers for Fire Protection*

FM 2008, *Suppression Mode ESFR Automatic Sprinklers*

FM 2030, *Residential Automatic Sprinklers*

FM 2311, *Pressure Gauges for Fire Protection Systems*

F.1.2.11 FMRC Publications. FM Global Research, FM Global, 1301 Atwood Avenue, P.O. Box 7500, Johnston, RI 02919.

FMRC J. I. 0X1R0.RR, "Large-Scale Fire Tests of Rack Storage Group A Plastics in Retail Operation Scenarios Protected by Extra Large Orifice (ELO) Sprinklers."

Copyright 2014 National Fire Protection Association (NFPA). Licensed, by agreement, for individual use and download on October 4, 2014 to LEADER and READER for designated user PATTARAPORN SRITRAKOOL. No other reproduction or transmission in any form permitted without written permission of NFPA. For inquires or to report unauthorized use, contact licensing@nfpa.org.

F.1.2.12 FPRF Publications. Fire Protection Research Foundation, 1 Batterymarch Park, Quincy, MA 02169.

Antifreeze Solutions Supplied through Spray Sprinklers – Interim Report, Fire Protection Research Foundation, February 2012

Antifreeze Systems in Home Fire Sprinkler Systems — Literature Review and Research Plan, Fire Protection Research Foundation, June 2010

Antifreeze Systems in Home Fire Sprinkler Systems – Phase II Final Report, Fire Protection Research Foundation, December 2010

F.1.2.13 IMO Publications. International Maritime Organization, 4 Albert Embankment, London, SEI 7SR, United Kingdom.

International Convention for the Safety of Life at Sea, 1974 (SOLAS 74), as amended, regulations II-2/3 and II-2/26.

F.1.2.14 ISO Publications. International Organization for Standardization, 1, ch. de la Voie-Creuse, Case postale 56, CH-1211 Geneva 20, Switzerland.

ISO 6182-1, *Fire protection — Automatic sprinkler systems — Part 1: Requirements and test methods for sprinklers*, 2004.

F.1.2.15 NFSA Publications. National Fire Sprinkler Association, P.O. Box 1000, Patterson, NY 12563.

Valentine and Isman, *Kitchen Cabinets and Residential Sprinklers,* November 2005.

F.1.2.16 SNAME Publications. Society of Naval Architects and Marine Engineers, 601 Pavonia Ave., Suite 400, Jersey City, NJ 07306.

Technical Research Bulletin 2-21, "Aluminum Fire Protection Guidelines."

F.1.2.17 UL Publications. Underwriters Laboratories Inc., 333 Pfingsten Road, Northbrook, IL 60062-2096.

Commodity Hazard Comparison of Expanded Plastic in Portable Bins and Racking, Project 99NK29106, NC4004, September 8, 2000.

"*Fact Finding Report on Automatic Sprinkler Protection for Fur Storage Vaults*," November 25, 1947.

Technical Report of Fire Testing of Automotive Parts in Portable Storage Racking, Project 99NK29106, NC4004, January 5, 2001.

ANSI/UL 193, *Alarm Valves for Fire Protection Service*

ANSI/UL 199, *Automatic Sprinklers for Fire Protection Service*

ANSI/UL 203, *Pipe Hanger Equipment for Fire Protection Service*

ANSI/UL 213, *Rubber Gasketed Fittings for Fire Protection Service*

ANSI/UL 260, *Dry Pipe and Deluge Valves for Fire Protection Service*

UL 262, *Gate Valves for Fire Protection Service*

ANSI/UL 312, *Check Valves for Fire Protection Service*

UL 393, *Indicating Pressure Gauges for Fire Protection Service*

ANSI/UL 852, *Metallic Sprinkler Pipe for Fire Protection Service*

UL 1091, *Butterfly Valves for Fire Protection Service*

UL 1285, *Polyvinyl Chloride (PVC) Pipe and Couplings for Underground Fire Service*

ANSI/UL 1468, *Direct Acting Pressure Reducing and Pressure Restricting Valves*

UL 1474, *Adjustable Drop Nipples for Sprinkler Systems*

ANSI/UL 1626, *Residential Sprinklers for Fire Protection Service*

ANSI/UL 1739, *Pilot-Operated Pressure-Control Valves for Fire Protection Service*

ANSI/UL 1767, *Early-Suppression Fast-Response Sprinklers*

ANSI/UL 1821, *Thermoplastic Sprinkler Pipe and Fittings for Fire Protection Service*

ANSI/UL 2443, *Flexible Sprinkler Hose with Fittings for Fire Protection Service*

F.1.2.18 Uni-Bell PVC Pipe Publications. Uni-Bell PVC Pipe Association, 2655 Villa Creek Drive, Suite 155, Dallas, TX 75234.

Handbook of PVC Pipe.

F.1.2.19 U.S. Government Publications. U.S. Government Printing Office, Washington, DC 20402.

Title 46, Code of Federal Regulations, Part 72.05-5.

U.S. Federal Standard No. 66C, *Standard for Steel Chemical Composition and Harden Ability*, April 18, 1967, change notice No. 2, April 16, 1970.

F.1.2.20 Other Publications.

High Volume/Low Speed Fan and Sprinkler Operation — Ph. 2 Final Report, Fire Research Foundation, 2011.

Thrust Restraint Design Equations and Tables for Ductile Iron and PVC Pipe, EBAA Iron, Inc.

Use of Diesel-Powered Equipment in Underground Mines, MSHA, 1985.

F.2 Informational References. (Reserved)

F.3 References for Extracts in Informational Sections.

NFPA 14, *Standard for the Installation of Standpipe and Hose Systems*, 2010 edition.

NFPA 24, *Standard for the Installation of Private Fire Service Mains and Their Appurtenances*, 2013 edition.

NFPA 33, *Standard for Spray Application Using Flammable or Combustible Materials*, 2011 edition.

NFPA 36, *Standard for Solvent Extraction Plants*, 2009 edition.

NFPA 37, *Standard for the Installation and Use of Stationary Combustion Engines and Gas Turbines*, 2010 edition.

NFPA 40, *Standard for the Storage and Handling of Cellulose Nitrate Film*, 2011 edition.

NFPA 75, *Standard for the Fire Protection of Information Technology Equipment*, 2013 edition.

NFPA 82, *Standard on Incinerators and Waste and Linen Handling Systems and Equipment*, 2009 edition.

NFPA 86, *Standard for Ovens and Furnaces*, 2011 edition.

NFPA 99, *Health Care Facilities Code*, 2012 edition.

NFPA *101*®, *Life Safety Code*®, 2012 edition.

NFPA 120, *Standard for Fire Prevention and Control in Coal Mines*, 2010 edition.

NFPA 122, *Standard for Fire Prevention and Control in Metal/Nonmetal Mining and Metal Mineral Processing Facilities*, 2010 edition.

NFPA 140, *Standard on Motion Picture and Television Production Studio Soundstages, Approved Production Facilities, and Production Locations*, 2008 edition.

NFPA 214, *Standard on Water-Cooling Towers*, 2011 edition.

NFPA 307, *Standard for the Construction and Fire Protection of Marine Terminals, Piers, and Wharves*, 2011 edition.

NFPA 318, *Standard for the Protection of Semiconductor Fabrication Facilities*, 2012 edition.

NFPA 415, *Standard on Airport Terminal Buildings, Fueling Ramp Drainage, and Loading Walkways*, 2013 edition.

NFPA 423, *Standard for Construction and Protection of Aircraft Engine Test Facilities*, 2010 edition.

NFPA 804, *Standard for Fire Protection for Advanced Light Water Reactor Electric Generating Plants*, 2010 edition.

NFPA 851, *Recommended Practice for Fire Protection for Hydroelectric Generating Plants*, 2010 edition.

NFPA 909, *Code for the Protection of Cultural Resource Properties — Museums, Libraries, and Places of Worship*, 2010 edition.

Copyright 2014 National Fire Protection Association (NFPA). Licensed, by agreement, for individual use and download on October 4, 2014 to LEADER and READER for designated user PATTARAPORN SRITRAKOOL. No other reproduction or transmission in any form permitted without written permission of NFPA. For inquires or to report unauthorized use, contact licensing@nfpa.org.

Index

Copyright © 2012 National Fire Protection Association. All Rights Reserved.

The copyright in this index is separate and distinct from the copyright in the document that it indexes. The licensing provisions set forth for the document are not applicable to this index. This index may not be reproduced in whole or in part by any means without the express written permission of NFPA.

-A-

Abbreviations, hydraulic calculations 1.6.2
Acceptance, system ..... Chap. 25
Approval of system 25.1
Circulating closed loop systems 25.3
Hydraulic design information sign 25.5, A.25.5
Instructions 25.4
Marine systems 26.8
Requirements 25.2, A.25.2.1
Underground pipe ..... 10.10, A.10.10.2.1 to A.10.10.2.2.6
Acetylene cylinder charging plants 22.10
A-class boundary (definition) ..... 3.10.1, 26.1.3(1)
Additives 4.4, 25.2.1.9, A.4.4, A.25.2.1.9
Antifreeze solutions ..... 7.6.2.2 to 7.6.2.4
Circulating closed-loop systems 7.7.1.6
Water supply 7.11
Adjacent occupancies 11.1.2, 12.3, A.11.1.2, A.12.3
Aerosol products, protection of 22.3
Air compressors ... 7.2.6.6, 22.29.1.5, A.7.2.6.6.1; *see also* Compressed air
Air conveying of vapors, gases, mists and noncombustible particulate solids, exhaust systems for 22.33
Aircraft engine test facilities 22.26, A.22.26.1.1
Aircraft hangars 22.24
Airport terminal buildings, fueling ramp drainage, and loading walkways 22.25, A.22.25.1.2, A.22.25.1.3
Air pressure
Leakage tests 25.2.2
Marine systems 26.4.12.2
Pressure tanks 24.2.4.3, A.24.2.4.3
Refrigerated spaces 7.9.2.2
System ..... 7.2.6, A.7.2.6.3 to A.7.2.6.6.1
Air receivers 7.2.6.6.1, 7.2.6.6.2, A.7.2.6.6.1
Definition 3.5.1
Air reservoirs 7.1.2.2
Definition 3.5.2
Air supply
Automatic air maintenance 7.2.6.6, A.7.2.6.6.1
Dry pipe system ..... 7.2.6.2 to 7.2.6.7, A.7.2.6.3 to A.7.2.6.6.1
Marine systems 26.7.2.4.1
Nitrogen or other gas substituted for 4.5
Refrigerated spaces 7.9.2.2, 7.9.2.4, 7.9.2.7, A.7.9.2.4, A.7.9.2.7
Air supply connections 7.2.6.7
Aisle widths ..... 16.2.1.3.2.1, 16.2.4.1.2(7), A.16.2.1.3.2.1, C.15
Definition 3.9.3.1
Plastics commodities, rack storage of ..... 17.2.4.1.2(7)
Plastics display/storage, retail stores ..... 20.3.1(10), 20.3.1(13), 20.3.2(5), 20.3.3(7), 20.3.4(6), 20.3.5(6), 20.3.6(7), 20.3.7(5)
Alarms .....*see also* Waterflow alarms/detection devices
Attachments 6.9.3, 6.9.4, 26.4.12.7, A.6.9.3.2, A.6.9.4
Drains 6.9.5
High water level device, dry pipe systems 7.2.5.4
Low air pressure, refrigerated spaces 7.9.2.2
Marine systems 26.4.12, A.26.4.12.1
Sprinkler 8.17.1, A.8.17.1, C.4
Alternative sprinkler system designs ..... Chap. 21
Hose stream allowance and water supply duration 21.4
Minimum obstruction construction 21.5
Open-frame rack storage 21.3, A.21.3
Palletized, solid-piled, bin box, shelf, or back-to-back shelf storage 21.2, A.21.2
Ammonium nitrate solids and liquids, storage of 22.37.1.2
Anchors
Concrete, for seismic applications 9.3.5.12.7, A.9.3.5.12.7.1
Post-installed 9.1.3, A.9.1.3
Definition 3.11.8, A.3.11.8
Animal housing facilities 22.20
Antiflooding devices 7.2.4.8
Antifreeze systems 7.6, 7.9.2.8.1.2, 8.16.4.1.2, 23.4.4.7.2, A.7.6, A.23.4.4.7.2
Definition 3.4.1
Premixed antifreeze solution 7.6.2, A.7.6.2
Definition 3.4.1.1
Apartment buildings D.1.1.6, D.1.1.7, D.2.19, D.2.20
Application of standard 1.3
Approved/approval
Definition 3.2.1, A.3.2.1
System 25.1
Underground pipe 10.10.1
Appurtenances (definition) 3.8.1.1
Area, of protection .....*see* System protection area
Area/density method .....*see* Density/area method
Arm-over (definition) 3.5.3
Arrays
Closed 15.2.3, 15.2.8, A.15.2.3
Definition 3.9.2.1.1
Open 15.2.3, A.15.2.3
Definition 3.9.2.1.2, A.3.9.2.1.2
Arrays (paper)
Closed ..... 19.1.1.5, Table 19.1.2.1.3(a), Table 19.1.2.1.3(b)
Definition 3.9.5.1.1
Open ..... Table 19.1.2.1.3(a), Table 19.1.2.1.3(b)
Definition 3.9.5.1.2
Standard ..... Table 19.1.2.1.3(a), Table 19.1.2.1.3(b)
Definition 3.9.5.1.3, A.3.9.5.1.3
ASCE/SEI 7, design approach to conform to ..... Annex E
Assembly occupancies D.2.3, D.2.4
Atriums D.1.1.1.1, D.2.1.2.1
Attachments
Alarms 6.9.4, 26.4.12.7, A.6.9.4
System ..... 8.17, A.8.17.1 to A.8.17.5.2.2, C.4, C.5
Attics ..... 8.3.2.5(5), 11.3.1.5
Authority having jurisdiction (definition) 3.2.2, A.3.2.2
Automatic air compressor 7.2.6.6, A.7.2.6.6.1
Automatic drip, fire department connections 8.17.2.6, A.8.17.2.6
Automatic sprinklers (definition) ..... 3.3.1; *see also* Sprinklers
Automatic sprinkler systems .....*see* Sprinkler systems
Automotive components on portable racks 20.2, A.20.2
Definition 3.9.3.2
Auxiliary systems 7.1.3
Available height for storage (definition) 3.9.1.1, A.3.9.1.1

-B-

Backflow prevention devices 7.6.3.1, 7.6.3.2, 8.17.4.6, A.7.6.3.1, A.7.6.3.2, A.8.17.4.6
Acceptance requirements 10.10.2.5, 25.2.5
As check valve 8.16.1.1.3.2
Back-to-back shelf storage ..... 15.2.2(3), 21.2, A.21.2
Definition 3.9.2.6.1, A.3.9.2.6.1
Baffles 8.6.3.4.2, 8.8.3.4.2, 8.10.3.3, 8.10.3.4, 8.10.3.6
Balconies ..... A.8.15.7, D.2.3.1.1(1), D.2.4.1.1(1)
Baled cotton
Definition 3.9.6.1, A.3.9.6.1
Storage 12.6.2, 12.6.3, 20.4

Copyright 2014 National Fire Protection Association (NFPA). Licensed, by agreement, for individual use and download on October 4, 2014 to LEADER and READER for designated user PATTARAPORN SRITRAKOOL. No other reproduction or transmission in any form permitted without written permission of NFPA. For inquires or to report unauthorized use, contact licensing@nfpa.org.

Temperature rating of sprinklers 8.3.2.7, A.8.3.2.7
Water supplies 20.4.1.1, 20.4.1.2
Tiered storage (definition) 3.9.6.2, A.3.9.6.2
Banded roll paper storage ... Table 19.1.2.1.3(a), Table 19.1.2.1.3(b)
Definition 3.9.5.2
Banded tires (definition) 3.9.4.1
Bar joist construction 8.12.5.1.1, 8.12.5.3.2
Definition A.3.7.1, A.3.7.2
Barriers .....*see also* Horizontal barriers; Thermal barriers
Assembly occupancies ..... D.2.3.1.1(3), D.2.4.1.1(3)
Compact storage modules 20.6.6.1
Oxidizer solids and liquids storage 22.37.1.4.4.4
Basements 11.3.1.5
Bath modules, marine 26.4.6
Bathrooms 8.15.8.1, A.8.15.8.1.1, D.1.1.5.1, D.2.18.2.1
Apartment buildings D.1.1.7.1
Definition 3.3.2, A.3.3.2
Residential board and care occupancies D.1.1.8.2, D.2.22.2.2
B-class boundary (definition) ..... 3.10.2, 26.1.3(2)
Beam and girder construction (definition) A.3.7.1
Bends, return 8.15.19
Bin box storage
Alternative sprinkler system designs 21.2, A.21.2
Class I to IV commodities, storage of ..... Chap. 14
Definition 3.9.2.2
Discharge criteria ..... Table 13.2.1
Early suppression fast-response (ESFR) sprinklers 15.4
Plastic and rubber commodities ..... Chap. 15
Special design for 14.5
Boat storage, rack ..... Table A.5.6
Boilers, oil-fired 22.27.1.9
Bolts 9.1.3.10, 9.1.4.5, 9.1.5.3, 10.3.5.2, 10.7.2
Clamp 10.8.3.1.3, 10.8.3.4, 10.8.3.5, A.10.8.3.5
Bracing .....*see* Sway braces
Branch lines ..... 22.30.2.1, Fig. A.3.5, A.22.30.2.1
Control mode specific application (CMSA) sprinklers .. 8.11.5.2.2
Definition 3.5.4
Early suppression fast-response sprinklers ... 8.12.2.2.3, 8.12.2.2.4, 8.12.3.1, 8.12.4.1.6, 16.3.3.4, 17.3.3.3, A.8.12.2.2.3, A.8.12.3.1(3)
Hangers, location 9.2.3, A.9.2.3.2
Length
For light hazard 23.5.2.1, 23.5.2.3, 23.5.2.5
For ordinary hazard ..... 23.5.3.2 to 22.5.3.10, A.22.5.3.9
Protection area of coverage, determination of 8.5.2.1.1, 23.4.4.5.4
Restraint of ..... 9.3.6, A.9.3.6.1 to A.9.3.6.6
Return bends connected to 8.15.18.2
Sway bracing 9.3.5.5, A.9.3.5.5.1
Brazed joints ..... 6.5.4, 10.3.3, 26.4.10.1(4), A.6.5.4, A.26.5.10.1(4)
Buildings
Detached 8.2.5, A.8.2.5
Differential movement, sway braces for buildings with 9.3.5.13
Multiple buildings attached by canopies, common roofs, etc. 8.2.4
Multistory ..... 8.16.1.5, 8.17.1.6, 9.2.5.4, 9.3.2.3.1(2), A.8.16.1.5.1, A.8.17.1.6, A.9.2.5.4.2, Fig. A.9.3.2.3(2), D.1.1.2, D.1.1.11.1, D.2.2, D.2.27.1.1
Service chutes .... 11.2.3.4.1, 22.15.2.2, A.22.15.2.2; *see also* Vertical shafts
Service equipment, rooms housing D.1.1.9.2, D.1.1.10.2, D.2.23.2.2, D.2.24.2.2
Building steel .....*see* Steel
Building structure, sprinkler piping supported by ... 9.2.1.3, A.9.2.1.3
Bulkheads (definition) 3.9.3.3
Bushings ..... 6.4.7, 8.15.20.2, A.8.15.20.2 to A.8.15.20.5.2

-C-

Cabinets 8.9.4.1.4, 8.10.7.1.5, A.8.9.4.1.4, A.8.10.7.1.5
Cable tunnels 22.27.1.3, 22.29.1.3
Calculations .....*see* Hydraulic calculations
Canopies ..... 8.2.4, 11.2.3.1.4(4)(i)
Carbon dioxide extinguishing system ..... 22.4.1.6(1)
Cartoned storage ..... 5.6.3.1(2), 5.6.3.2, Fig. 15.2.2, Table 15.4.1, Fig. 17.1.2.1, 17.2.3.1, 20.3, Table A.5.6.3.1, A.5.6.3.2, Table A.5.6.3.2, A.20.3
Alternative sprinkler system designs 21.2.1, 21.3.1
Definition 3.9.1.2
Discharge criteria ..... Table 13.2.1, Table 15.3.1
Carton records storage
Definition 3.9.1.3, A.3.9.1.3
Sprinkler protection 20.5, C.25
Catwalks ..... D.2.3.1.1(2), D.2.4.1.1(2)
Carton records storage, sprinkler protection of 20.5, C.25
Definition 3.9.1.4
Ceiling flanges, hanger screws in 9.1.5.2
Ceiling height .....*see also* Clearance
Definition 3.3.3
Ceiling pockets ..... 8.6.7, 8.8.7, 11.2.3.2.3.1(4), A.8.6.7.1, A.8.6.7.2(4), A.8.8.7.1, A.8.8.7.2(4)
Definition 3.3.4, A.3.3.4
Ceilings .....*See also* Concealed spaces; Drop-out ceilings
Clearance, effect on sprinkler performance of B.3
Deflector distance below ..... 8.5.4.1, 8.6.4.1, 8.7.4.1.1, 8.8.4.1, 8.9.4.1.1, 8.10.4, 8.11.4.1, 8.12.4.1, A.8.4.1, A.8.5.4.1, A.8.6.4.1.2(5) to A.8.6.4.1.3.3, A.8.8.4.1.1.4(A) to A.8.8.4.1.3
Flat (definition) 3.3.5.1
Horizontal (definition) 3.3.5.2
Open-grid 8.15.14, A.8.15.14
Definition A.3.7.2
Peak, sprinklers at or near 8.6.4.1.3, 8.8.4.1.3, A.8.6.4.1.3.2, A.8.6.4.1.3.3, A.8.8.4.1.3
Sheathing, pipe hanger installation and 9.2.1.1, A.9.2.1.1.1
Sloped ..... 8.4.2(1), 8.6.4.1.3, 8.6.4.2.2, 8.6.4.2.3, 8.8.4.1.3, 8.9.4.2.2, 8.10.3.5, 8.10.3.6, 11.3.4, 23.4.4.5.5, A.8.6.4.1.3.2, A.8.6.4.1.3.3, A.8.8.4.1.3, A.23.4.4.5.5
Definition 3.3.5.3
Storage facilities 12.1.2
Water demand requirements 11.2.3.2.3.3, 11.2.3.2.4
Smooth-ceiling construction (definition) A.3.7.2
Smooth (definition) 3.3.5.4
Sprinklers below, piping to ..... 8.15.20, 23.4.4.5.4, A.8.15.20.1 to A.8.15.20.5.2
Ceiling sprinklers, rack storage
Carton records storage 20.5.6.2, 20.5.6.5.2
Density adjustments 16.2.1.3.4
High bay records storage, mobile 20.7.1, A.20.7.1
Oxidizer solids and liquids storage .... Table 22.37.1.4.1, 22.37.1.4.2
Plastics storage ..... 17.2, 17.2.1.4, 17.3.1.3, A.17.2.1.1 to A.17.2.4.1.1, A.17.3.1.3, C.8, C.20, C.22
Refrigerated spaces 7.9.2.8.4
Solid racks 16.1.6, 17.1.5, C.11
Steel columns, fire protection of ..... 16.1.4.1(2), 17.1.4.1(3)
Water demand 16.2.1.3.3, 17.2.1.2, 17.3.1.3, A.17.2.1.2.4, A.17.3.1.3
Double-row and single-row racks 16.3.1.1, 17.2.1.2.1, A.16.3.1.1, C.23
Multiple-row racks 16.3.1.2, 17.2.1.2.1
Portable racks 16.2.1.3.2, 16.2.1.3.3, A.16.2.1.3.2, C.15
Single-row racks 17.2.1.2.1
Cellulose nitrate motion picture film, storage and handling of ..... 22.7, A.22.7.1.3 to A.22.7.1.10
Central safety station (definition) ..... 3.10.3, 26.1.3(3)
Central station supervisory service ..... 8.16.1.1.2.1(1), 11.2.2.5
Certificate, owner's 4.3, A.4.3
Check valves 8.16.1.1.3, 8.16.1.1.4, 8.16.1.1.6, A.8.16.1.1.3, A.8.16.1.1.4, A.8.16.1.1.6
Air compressor, automatic 7.2.6.6.4
Air filling connection 7.2.6.4.2
Alarm 8.17.1.2
Combined systems 7.4.3.6, 7.4.4
Definition 3.8.1.15.1

Copyright 2014 National Fire Protection Association (NFPA). Licensed, by agreement, for individual use and download on October 4, 2014 to LEADER and READER for designated user PATTARAPORN SRITRAKOOL. No other reproduction or transmission in any form permitted without written permission of NFPA. For inquires or to report unauthorized use, contact licensing@nfpa.org.

Dry pipe systems 7.2.3.9, 7.2.4.5
Fire department connections 8.17.2.4.1, 8.17.2.4.2, 8.17.2.5.1
Hydrostatic tests 25.2.1.10
Multistory buildings 8.16.1.5, A.8.16.1.5.1
Outside sprinklers 7.8.4.2, A.7.8.4.2.1, A.7.8.4.2.3
Refrigerated spaces 7.9.2.6, A.7.9.2.6
Chemicals, protection of laboratories using 22.8
Chutes .....*see* Vertical shafts
Circulating closed-loop sprinkler systems 7.7.1, A.7.7.1.2
Acceptance 25.3
Definition 3.4.2
Marine systems 26.3.4
Clamps, joint 10.8.3.1.1, 10.8.3.4, 10.8.3.5, A.10.8.3.5
Classification .....*see* Commodity classification; Occupancy classifications
Cleanrooms ..... 22.23, A.22.23.1.1 to A.22.23.2.3
Clearance
To ceiling B.3
Definition 3.9.1.5
Piping 9.3.4, A.9.3.4
To storage 8.5.6, 8.6.6, 8.7.6, 8.8.6, 8.11.6, 8.12.6, 16.3.2.7.2, 17.2.1.5.1, 17.2.2.6.2, 17.2.3.4.3, A.8.5.6.1, A.8.7.6, A.8.8.6
Closets 8.5.5.4, 8.15.8.2, A.8.15.8.2
Apartment buildings ... D.1.1.6.1, D.1.1.7.1, D.2.19.2.1, D.2.20.2.1
Guest rooms or suites D.1.1.5.1, D.2.18.2.1
Hospital clothes closets 8.15.9, A.8.15.9
Lodging or rooming houses D.1.1.3.1, D.1.1.3.2, D.2.16.2.1, D.2.16.2.2
Mercantile occupancies D.1.1.9.2, D.1.1.10.2, D.2.23.2.2, D.2.24.2.2
Residential board and care occupancies D.1.1.8.2, D.2.22.2.2
Coal mines 22.35, A.22.35.1.1.1
Coatings
Pipe 7.11
Special 6.2.6, A.6.2.6.1
Color coding of sprinklers 6.2.5.1, 6.2.5.2
Columns
Roll paper (definition) 3.9.5.3
Steel .....*see* Steel
Combined dry pipe-preaction sprinkler systems ..... 7.4, A.7.4.2 to A.7.4.3.2
Definition 3.4.3
System riser, protection area of 8.2.1, A.8.2.1
Combustion engines, installation and use of stationary 22.6, A.22.6.1
Commodities .....*see also* specific commodities, e.g. Plastics
Definition 3.9.1.6
Rack storage .....*see* Rack storage
Commodity classification 5.6, A.5.6, C.2
Class I ..... 5.6.3.1, A.5.6.3.1, Table A.5.6.3.1, Table A.5.6.3
Palletized, solid pile, bin box, or shelf storage, protection of ..... Chap. 14
Rack storage, protection of ..... Chap. 16, Annex C
Class II ..... 5.6.3.2, A.5.6.3.2, Table A.5.6.3.2, Table A.5.6.3
Palletized, solid pile, bin box, or shelf storage, protection of ..... Chap. 14
Class III ..... 5.6.3.3, A.5.6.3.3, Table A.5.6.3.3, Table A.5.6.3
Palletized, solid pile, bin box, or shelf storage, protection of ..... Chap. 14
Class IV ..... 5.6.3.4, A.5.6.3.4, Table A.5.6.3.4, Table A.5.6.3
Palletized, solid pile, bin box, or shelf storage, protection of ..... Chap. 14
Rack storage, protection of ..... Chap. 16, Annex C
Mixed commodities 5.6.1.2
Pallet types 5.6.2, A.5.6.2.2, A.5.6.2.3
Plastics, elastomers, and rubber ... 5.6.3.3, 5.6.3.4.1, 5.6.4, A.5.6.3.3, Table A.5.6.3.3, Table A.5.6.3.4, Table A.5.6.3, A.5.6.4, Table A.5.6.4.1
Rolled paper storage 5.6.5, A.5.6.5
Compact storage 20.6, C.24
Definition 3.9.1.7
Compact storage modules 20.6, 22.30.1.3, A.20.6.1, A.20.6.5, A.22.30.1.3.1, A.22.30.1.3.2, C.24
Definition 3.9.1.8
Compartmented (definition) 3.9.1.9, A.3.9.1.9
Compartments (definition) 3.3.6
Composite wood joist construction 8.15.1.4
Definition A.3.7.1
Compressed air .....*see also* Air compressors
Dry pipe systems ..... 7.2.6.2 to 7.2.6.7, A.7.2.6.3 to A.7.2.6.6.1
Pressure tanks (marine systems) 26.7.2.4.1
Compressed air foam extinguishing systems 22.29.1.4, 22.29.1.5
Concealed spaces
Cleanrooms 22.23.1.2, A.22.23.1.2.1
Exposed combustibles, localized protection of 8.15.1.5
Spaces above ceilings 8.15.23, A.8.15.23.3
Sprinklers in ..... 8.3.2.5(5), 8.15.1, 8.15.7.3, 8.15.23, 11.3.4, A.8.15.1.2 to A.8.15.1.2.17, A.8.15.23.3
Marine systems 26.4.4, A.26.4.4
Pendent and upright sprinklers 8.6.4.1.4
Pipe schedule systems, revamping of ..... Fig. 8.15.20.4.3
Unsprinklered ..... 8.15.23.1, 11.2.3.1.4(3), 11.2.3.1.4(4), 11.2.3.2.7.2, 12.9, A.11.2.3.1.4(3), A.11.2.3.1.4(4)(d), A.11.2.3.1.4(4)(j), A.12.9.1 to A.12.9.2(10)
Concealed sprinklers (definition) 3.6.2.1
Concrete, hangers in 9.1.3, A.9.1.3
Concrete tee construction (definition) A.3.7.1
Connections .....*see also* Couplings; Fire department connections; Hose connections; Test connections
Air supply 7.2.6.4
City 8.16.1.1.4.4, 12.8.3
Domestic/fire protection water supply interconnection B.1
Drain 8.16.2.4, A.8.16.2.4
Flexible .....*see* Flexible listed pipe couplings
Foundation walls, through or under 24.1.6.2, A.24.1.6.2
Underground and aboveground piping, water supply 24.1.6.1
Valves, water supply connections 8.16.1.1.2.1, 8.16.1.1.3.1, 8.16.1.1.4.4
Waterworks system, from/to 24.1.8, 24.2.1, 24.2.2, A.24.1.8, A.24.2.1, A.24.2.2
Construction .....*see* Obstructed construction; Unobstructed construction
Containers .....*see also* Cylinders; Open-top containers
Compressed gas and cryogenic fluids in 22.11
Shipping, master, or outer (definition) 3.9.1.10, A.3.9.1.10
Storage ..... Table A.5.6
Control mode density area sprinkler protection .....*see* Density/area method
Control mode specific application (CMSA) sprinklers ..... 6.2.3.5, 8.4.7, 8.11, 11.2.3.2.4(2), 12.6.7, A.8.4.7.2, A.8.11.2 to A.8.11.5.3
Clearance to storage 8.11.6
Definition 3.6.4.1, A.3.6.4.1
Deflector position 8.11.4, A.8.11.4.1
Distance below ceilings 8.11.4.1, A.8.4.1
Hydraulic calculation procedure 23.4.4.2
Obstructions to discharge 8.11.4.1.2, 8.11.5, 21.5.3.2, A.8.11.5
Palletized, solid pile, bin box, or shelf storage 14.3, 15.3
Protection areas 8.11.2, A.8.11.2
Rack storage ..... 16.1.4.1(3), 17.1.4.1(4), 17.3.2, A.17.3.2.5
Over 25 ft in height 16.3.2
Up to and including 25 ft in height 16.2.2, 17.2.2, A.16.2.2.7.3, A.17.2.2.6.3, C.19
Roll paper storage 19.1.2.2
Rubber tire storage ..... 18.2.4, 18.3(3), 18.4(2)
Spacing 8.11.3, A.8.11.3.1
Steel columns ..... 16.1.4.1(3), 17.1.4.1(4)
Wood pallets, protection of ..... 12.12.1.2, Table 12.12.1.2(b)
Control valves 8.17.1.4, 8.17.2.4.2
Accessibility 8.16.1.1.7, A.8.16.1.1.7
Advanced light water reactor electric generating plants 22.27.2.1.2, A.22.27.2.1.2
Cleanrooms 22.23.2.4

Copyright 2014 National Fire Protection Association (NFPA). Licensed, by agreement, for individual use and download on October 4, 2014 to LEADER and READER for designated user PATTARAPORN SRITRAKOOL. No other reproduction or transmission in any form permitted without written permission of NFPA. For inquires or to report unauthorized use, contact licensing@nfpa.org.

Definition 3.3.7, A.3.3.7
Drain connections 8.16.2.4.3, 8.16.2.4.7
High-rise buildings D.1.1.2.1, D.2.2.1.1
Hose connections ..... 8.17.5.2.2, A.8.17.5.2.2, Fig. A.8.17.5.2.2(a), Fig. A.8.17.5.2.2(b)
Identification 8.16.1.1.8
In-rack sprinklers 8.16.1.6, A.8.16.1.6
Marine systems 26.2.6.1, 26.4.12.2, A.26.2.6.1
Multiple systems, fire department connections for 8.17.2.4.3
Outside sprinklers 7.8.3
Preaction and deluge systems 7.3.1.8
Refrigerated spaces 7.9.2.5, A.7.9.2.5
Sprinkler system 7.3.1.7.4, 8.16.1.1, A.7.3.1.7.4, A.8.16.1.1
Testing 10.10.2.4.3, 25.2.3.5
Water-cooling towers 22.22.2.6.1
Conventional pallets (definition) 3.9.1.11, A.3.9.1.11
Conventional sprinklers .....*see* Old-style/conventional sprinklers
Conveying of vapors, gases, mists and noncombustible particulate solids, exhaust systems for air 22.33
Conveyors
Coal, underground conveyors for 22.35.1.3, 22.35.2.1
Sprinklers obstructed by ..... 8.12.5.3.1(1)
Waste and linen conveying systems 22.15.2.2.2, 22.15.2.2.3
Cooking equipment and operations
Commercial ..... 7.10, 8.3.2.5(7), A.7.10.2, Fig. A.7.10.2
Residential ..... Table 8.3.2.5(c)
Coolers .....*see* Refrigerated spaces
Core (paper roll) (definition) 3.9.5.4
Cornice sprinklers 7.8.8.5
Corridors
Design areas 11.2.3.3.6, 11.2.3.3.7
Residential sprinklers in 8.4.5.1, A.8.4.5.1
Corrosion resistant piping 8.15.21.1, 8.16.2.6.3, 8.16.4.2, 22.21.2.10.1, 22.30.2.3, A.8.16.4.2, A.22.30.2.1, A.22.30.2.3
Definition 3.8.1.2
Corrosion-resistant piping 7.11.2
Corrosion-resistant sprinklers 6.2.6.1, A.6.2.6.1
Definition 3.6.3.1
Water-cooling towers 22.21.2.10.2, 22.21.2.10.3, A.22.21.2.10.3
Corrosion-retardant material 7.11
Definition 3.8.1.3
Underground pipe joint restraints 10.8.3.5, A.10.8.3.5
Cotton, baled .....*see* Baled cotton
Couplings 6.4.6, A.6.4.6
Flexible listed pipe coupling 9.3.2, A.9.3.2
Definition 3.5.7
Cover plates 6.2.7.3
C_p 9.3.5.9.3, 9.3.5.9.5, 9.3.6.4, A.9.3.5.9.3.2, A.9.3.5.9.5, A.9.3.6.4
Definition 3.11.1
Cross mains ..... Fig. A.3.5
Definition 3.5.5
Hangers, location ..... 9.2.4.3 to 9.2.4.5
Sway bracing 9.3.5.5, 9.3.5.5.7, A.9.3.5.5.1
Cryogenic fluids, storage use and handling of 22.11
Cultural resource properties ..... 22.30, A.22.30.1 to A.22.30.2.3
Curtains, privacy 8.6.5.2.2, 8.7.5.2.2.1, 8.8.5.2.2.1, 8.9.5.2.2.1, A.8.6.5.2.2.1, A.8.7.5.2.2.1, A.8.9.5.2.2.1
Cutoff rooms, plastic pallets stored in 12.12.2.4.1
Cutting, oxygen-fuel gas systems for 22.9
Cutting tables, sprinklers obstructed by ... 8.7.5.3.2, 8.8.5.3.2, 8.9.5.3.2
Cylinders
Acetylene cylinder charging plants 22.10
Compressed gas and cryogenic fluids in 22.11

-D-

Decks A.8.15.7
Pipe hangers under metal 9.2.1.4, A.9.2.1.4.1
Sprinklers obstructed by 8.7.5.3.2, 8.8.5.3.2, 8.9.5.3.2
Decorative frame elements 8.15.1.2.18
Decorative sprinklers 6.2.6.3
Definition 3.6.3.5
Deep fat fryers ..... 7.10.8.2, Fig. A.7.10.8.2
Definitions
Construction 3.7, A.3.7.1, A.3.7.2
General definitions ..... 3.3, A.3.3.2 to A.3.3.22
Marine systems ..... 3.10, 26.1.3, A.3.10.4 to A.3.10.9, A.26.1.3(4) to A.26.1.3(9)
NFPA ..... 3.2, A.3.2.1 to A.3.2.3
Private water supply piping 3.8, A.3.8.1.11
Sprinklers ..... 3.6, A.3.6.1 to A.3.6.4.7.1
Sprinkler system components 3.5, A.3.5
Sprinkler system types ..... 3.4, A.3.4.6 to A.3.4.10
Storage ..... 3.9, A.3.9.1 to A.3.9.6.2
Deflectors
Clearance to storage 8.5.6, 8.6.6.1, 8.7.6, 8.8.6.1, 8.11.6, 8.12.6, A.8.5.6.1, A.8.7.6
Obstructions below 8.5.5.2.1, 8.6.5.2.1.1, 8.7.5.2.1.1, 8.8.5.2.1.1, 8.9.5.2.1.1, 8.11.5.2.1.1
Position ..... 8.5.4, 8.6.4, 8.7.4, 8.8.4, 8.9.4, 8.10.4, 8.11.4, 8.12.4, A.8.5.4.1, A.8.6.4.1.2(5) to A.8.6.4.1.3.3, A.8.7.4.1.2.1 to A.8.7.4.1.3.3, Fig. A.8.7.4.1.3.2, Fig. A.8.7.4.1.3.3, A.8.8.4.1.1.4(A) to A.8.8.4.1.3, A.8.9.4.1.2.1 to A.8.9.4.1.4, Fig. A.8.9.4.1.3.1, Fig. A.8.9.4.1.3.2, A.8.11.4.1
Deluge sprinkler systems ..... 7.3, A.7.3.1 to A.7.3.3
Advanced light water reactors 22.27.1.3.2, 22.27.2.3
Definition 3.4.4
Fire department connections ..... 8.17.2.2(2), 8.17.2.4.2(4)
Hydraulic calculations 7.3.3.2, 23.6
Hydrostatic tests 25.2.1.12
Hyperbaric chambers, Class A 22.17.1, A.22.17.1.5, A.22.17.1.8
Open sprinklers 8.4.4.1
Operational tests 25.2.3.3
Organic peroxide formulations storage 22.37.1.3.3
Proscenium opening 8.15.17.2
Return bends 8.15.19.3
Spray application areas ..... 22.4.1.6(1)
Test connections 8.17.4.5
Water-cooling towers 22.21.1.1, 22.21.1.4, 22.21.1.7.1, A.22.21.1.1.1, A.22.21.1.1.2, A.22.21.1.7.1.1, A.22.21.1.7.1.3
Waterflow detecting devices 6.9.2.3
Deluge valves ..... 8.17.1.3.1, 8.17.1.3.2, 8.17.2.4.2(4), 25.2.3.3.1
Density/area method 11.2.3.2, 12.7, 23.4.4.1.1, A.11.2.3.2.5, A.11.2.3.2.7, A.12.7.2, A.23.4.4.1.1.1, A.23.4.4.1.1.4
Aircraft engine test facilities 22.26, A.22.26.1.1
Baled cotton storage 20.4.2
Design densities, calculation procedure ..... 23.4.4.5, A.23.4.4.5.1 to A.23.4.4.5.5
Miscellaneous storage 13.2.2
Palletized, solid piled, bin boxes, or shelf storage 14.2, A.14.2
Plastic and rubber commodities 15.2, A.15.2
Rack storage
Over 25 ft in height ..... 16.3.1, 17.3.1, A.16.3.1.1, A.17.3.1.3 to A.17.3.1.10, C.23
Up to and including 25 ft in height ..... 16.2.1, 17.2, A.16.2.1.3.1 to A.16.2.1.4.2.5, A.17.2.1.1 to A.17.2.4.1.1, C.8, C.14 to C.19, C.22
Roll paper storage 19.1.2.1, A.19.1.2.1.4
Selection of density and area of application B.2.1.2
Wood pallets ..... 12.12.1.2, Table 12.12.1.2(a)
Design, sprinkler system ..... Chap. 11, B.2.1.1; *see also* Density/area method
Adjacent design methods 12.3, A.12.3
ASCE/SEI 7, design approach to conform to ..... Annex E
Marine systems 26.5, A.26.5.2, A.26.5.3
Miscellaneous storage 13.2
Occupancy hazard fire control ..... 11.2, A.11.2.1.1 to A.11.2.3.4.2
Palletized, solid piled, bin boxes, or shelf storage
Class I to IV commodities ..... Chap. 14
Plastics and rubber commodities ..... Chap. 15

Copyright 2014 National Fire Protection Association (NFPA). Licensed, by agreement, for individual use and download on October 4, 2014 to LEADER and READER for designated user PATTARAPORN SRITRAKOOL. No other reproduction or transmission in any form permitted without written permission of NFPA. For inquires or to report unauthorized use, contact licensing@nfpa.org.

Room design method 11.2.3.3, 12.7.1, 12.10, A.11.2.3.3.1, A.12.10.1
Special design approaches ..... 11.3, 14.5, 15.4.4, 16.3.4, 17.2.4, A.11.3.1.1 to A.11.3.2.1, A.17.2.4.1.1, C.20
Special design areas 11.2.3.4, A.11.2.3.4.2
Detached buildings ..... 8.2.5, 12.12.2.1(2), 22.37.1.3.3, A.8.2.5
Detection devices and systems ....*see also* Waterflow alarms/detection devices
Cultural resource properties 22.30.1.3.6
Deluge systems 7.3.1.7.1, 7.3.3.1
High-expansion foam systems 12.11.4, 16.1.5.3
Optical flame detection, spray application areas ..... 22.4.1.6(1)
Pilot line detectors 8.14
Definition 3.6.3.6
Preaction systems 7.3.1.7.1, 7.3.2.1, 7.9.2.8, A.7.9.2.8.1.1
Spare 26.3.2
Water-cooling towers, heat detectors for 22.21.2.8
Dielectric fittings 7.7.1.1.4
Differential-type valves 25.2.1.15
Discharge characteristics, sprinklers ..... 6.2.3, Table A.6.2.3.1
Docks, exterior 8.15.6
Doors
Automatic or self-closing ..... 11.2.3.3.5(3)
Idle pallet storage above 12.12.3
Overhead .....*see* Overhead doors
Dormitories D.1.1.4, D.1.1.5, D.2.17, D.2.18
Draft curtains 8.4.6.4, 12.1.1, A.12.1.1.1, A.12.1.1.3, C.6
Definition 3.3.8, A.3.3.8
Draft stops ..... 8.15.4.2, D.1.1.4.1, D.1.1.6.3, D.1.1.7.2, D.1.1.9.1(3), D.1.1.10.1(3), D.2.17.2.1, D.2.19.2.3, D.2.20.2.2, D.2.23.2.1(3), D.2.24.2.1(3)
Drains ..... 8.16.2, A.8.16.2.1 to A.8.16.2.6.1
Alarms 6.9.5
Auxiliary 7.2.3.9.2, 8.16.2.5, 22.30.2.2, A.8.16.2.5.2.1, A.8.16.2.5.3.5, A.22.30.2.2
Dry pipe valve 7.2.5.4.3
Fire department connections 8.17.2.6, A.8.17.2.6
Marine systems, discharge 26.4.11
Pressure gauges 8.17.3
System ..... 8.16.2.1 to 8.16.2.4, A.8.16.2.1 to A.8.16.2.4.1
System, main drain, or sectional 8.16.2.4, A.8.16.2.4
Test ..... 8.17.4.1, A.8.17.4.1, Fig. A.8.17.4.1
Drain valves 6.7.3
Discharge of 8.16.2.6, A.8.16.2.6.1
Marine systems 26.2.6.2
Multistory buildings 8.16.1.5, A.8.16.1.5.1
Outside sprinklers 7.8.4.1
Drop ceilings 8.15.23.2, 8.15.23.3, A.8.15.23.3
Drop-out ceilings 8.15.15, A.8.15.5, A.8.15.15.4
Definition 3.3.9
Marine systems 26.4.7
Dry barrel hydrants 10.10.2.4.2
Definition 3.8.2.1.1
Dry chemical extinguishing systems ..... 22.4.1.6(1)
Dry pipe sprinkler systems ..... 7.2, A.7.2; *see also* Combined dry pipe-preaction sprinkler systems
Air test 25.2.2
Baled cotton storage ..... Table 20.4.2.1
Control mode specific application (CMSA) sprinklers used in 8.4.7.1, 8.4.7.2.1, 8.4.7.3.4, 16.2.2.5, 16.3.2.5, 17.2.2.4
Cultural resource properties 22.30.1.3.5, 22.30.2.2, 22.30.2.3, A.22.30.2.2, A.22.30.2.3
Definition 3.4.5
Drainage 8.16.2.3, 8.16.2.5.3, A.8.16.25.3.5
Early suppression fast-response sprinklers used in 8.4.6.1
Fire department connections ..... 8.17.2.4.2(2)
Operational tests 25.2.3.2, A.25.2.3.2
Palletized, solid pile, bin box, or shelf storage 14.3.5.1
Plastic and rubber commodities 15.3.4
Piping, protection of 8.16.4.1.1, A.8.16.4.1.1
Preaction systems classified as ... 15.3.4, 16.2.2.5, 16.3.2.5, 17.2.2.4
Quick-opening devices 7.2.3.3, 7.2.3.4, 7.2.4, 7.4.3.8, 25.2.3.2.1
Residential sprinklers used in 8.4.5.2
Roll paper storage ..... Table 19.1.2.2
Storage, use for 12.4.2, 12.5, A.12.4.2
Test connections ..... 8.17.4.3, A.8.17.4.3, Fig. A.8.17.4.3
Underground pipe 8.15.21
Water-cooling towers 22.21.1.1.1, 22.21.1.7.2, 22.21.2.1.3, A.22.21.1.1.1, A.22.21.1.7.2.1, A.22.21.1.7.2.2
Water delivery/demand requirements 7.2.3.6, 11.2.3.2.5, A.11.2.3.2.5
Waterflow detecting devices 6.9.2.2
Dry pipe valves ..... 7.2.1(1), 7.2.3.1, 7.2.4.2, 7.2.5, 7.4.3, 7.9.2.6.2, 8.17.1.3.1, 8.17.1.3.2, 8.17.2.4.2(2), A.7.2.3.1, A.7.2.5, A.7.4.3.2
Low differential 7.2.5.4.2
Marine systems 26.4.12.2
Operational tests 25.2.3.2.1, 25.2.3.2.2, A.25.2.3.2.2
Dry sprinklers .... 7.2.2(2), 7.4.2.4(2), 8.4.9, A.7.2.2(2), A.7.4.2.4(2), A.8.4.9.1, A.8.4.9.3
Definition 3.6.3.2, A.3.6.3.2
Preaction systems ..... 7.3.2.5(2), A.7.3.2.5(2)
Ducts
Sprinkler piping below, support of 9.2.1.5
Sprinklers in ..... 7.10.2 to 7.10.7, Table 8.3.2.5(c), 8.15.13, Fig. A.7.10.2
Cleanrooms 22.23.1.3, 22.23.2.3, 22.23.2.4, A.22.23.1.3, A.22.23.2.3
Spray application areas 22.4.2.1, A.22.4.2.1
Vertical shafts 8.15.2.1.1, 26.4.5.1
Sprinklers near ..... 8.3.2.5(9)
Sprinklers obstructed by ..... 8.7.5.3.2, 8.8.5.3.2, 8.9.5.3.2, 8.10.7.3.2, 8.11.5.3.2, 8.12.5.1.1, 8.12.5.3.1(1)
Dwelling units 7.2.3.1.1, 8.4.5.1, 8.15.8, A.8.4.5.1, A.8.15.2, A.8.15.8.1.1, D.1.1.6, D.1.1.7, D.2.19.2, D.2.20.2
Definition 3.3.10

-E-

Early suppression fast-response (ESFR) sprinklers ..... 8.4.6, 8.12, 12.1.3.2, 12.4.3, 12.6.7, A.8.4.6.3, A.8.12.2.2.3 to A.8.12.5.2
Clearance to storage 8.12.6
Definition 3.6.4.2, A.3.6.4.2
Deflector position 8.12.4
Discharge characteristics 6.2.3.5, 6.2.3.6
Hydraulic calculation procedure 23.4.4.3
Idle pallets
Plastic pallets ..... Table 12.12.2.1, 12.12.2.2.3
Wood pallets ..... 12.12.1.2, Table 12.12.1.2(c)
Obstructions to discharge 8.12.5, 21.5.2.2.1, A.8.12.5.2
Palletized, solid pile, bin box, or shelf storage 14.4, 15.4
Protection areas ..... 8.12, A.8.12.2.2.3 to A.8.12.5.2
Rack storage
Over 25 ft in height 16.3.3, 17.3.3, A.16.3.3, A.17.3.3
Plastics commodities 17.2.3, 17.3.3, A.17.2.3, A.17.3.3
Slatted shelves 16.2.4.1.2, C.20
Up to and including 25 ft 16.2.3, 17.2.3, 17.2.4.1.2, A.16.2.3, A.17.2.3
Roll paper storage 19.1.1.1.1, 19.1.1.2.1, 19.1.2.3
Rubber tire storage ..... 18.2.4, 18.3(3), 18.4(3)
Spacing ..... 8.12.3, Fig. A.8.12.2.2.3, A.8.12.3.1(3)
Steel columns ..... 16.1.4.1(3), 17.1.4.1(4)
Temperature rating 8.4.6.5
Earthquake damage, pipe protection from ..... 9.1.1.4, 9.3, A.9.3.1 to A.9.3.6.6
Eaves 8.15.1.2.18
EC .....*see* Extended coverage (EC) sprinklers
Egg crate ceilings .....*see* Open-grid ceilings
Elastomers, classification of ..... 5.6.4, A.5.6.4, Table A.5.6.4.1
Electrical equipment 8.15.11
Waterflow alarm attachments 6.9.4, A.6.9.4

Copyright 2014 National Fire Protection Association (NFPA). Licensed, by agreement, for individual use and download on October 4, 2014 to LEADER and READER for designated user PATTARAPORN SRITRAKOOL. No other reproduction or transmission in any form permitted without written permission of NFPA. For inquires or to report unauthorized use, contact licensing@nfpa.org.

Electric generating plants
Advanced light water reactor ..... 22.27, A.22.27.1.1 to A.22.27.1.6
Hydroelectric generating plants 22.29, A.22.29.1, A.22.29.2
Elevator hoistways and machine rooms ..... 8.15.5, A.8.15.5.1 to A.8.15.5.5, D.1.1.9.2, D.1.1.10.2, D.2.23.2.2, D.2.24.2.2
Encapsulation (encapsulated storage)
Definition 3.9.1.12, A.3.9.1.12
Palletized, solid pile, bin box, or shelf storage
Control mode density/area sprinkler protection criteria ..... 14.2.1(3), 14.2.5, A.14.2.1(3)
Early suppression fast response (ESFR) sprinklers .... Table 14.4.1
Water supplies ..... Table 14.4.1
Rack storage
Ceiling sprinklers 16.3.1.2.1, 17.2.1.2.1, 17.3.1.3, A.17.3.1.3
In-rack sprinkler systems 17.3.1.2, 17.3.1.4, 17.3.1.5, 17.3.1.7, 17.3.1.8
Engines, stationary combustion, installation and use of 22.6, A.22.6.1
Equivalency to standard 1.5
Escalators .....*see* Moving stairways
Escutcheons 6.2.7, A.6.2.7.2
ESFR .....*see* Early suppression fast-response (ESFR) sprinklers
Exhaust systems
Air conveying of vapors, gases, mists and noncombustible particulate solids 22.33
Commercial-type cooking equipment ....7.10.2 to 7.10.7, Fig. A.7.10.2
Expanded (foamed or cellular) plastics ..... Table 13.2.1, Fig. 15.2.2, 15.3.1, Table 15.4.1, Fig. 17.1.2.1, 17.2.3.1, 17.2.4.1.2(2)
Definition 3.9.1.13
Exposed Group A plastic commodities ..... 13.2.1(6), Table 13.2.1, Fig. 15.2.2, Table 15.3.1, Fig. 17.1.2.1, 17.2.1.4, A.17.2.1.4
Definition 3.9.1.14
Exposure protection systems ..... 7.8, 8.3.4.3, 11.3.2, A.7.8.4.2.1, A.7.8.4.2.3, A.11.3.2.1; *see also* Adjacent occupancies
Hydraulic calculations 11.3.2.1, 23.7, A.11.3.2.1, A.23.7
Operational tests 25.2.6
Water-cooling towers 22.21.1.6
Extended coverage (EC) sprinklers ..... 11.2.3.2.2.3, 11.2.3.2.2.4, 11.2.3.2.3.1, 11.2.3.2.4(1)
Ceiling pockets ..... 8.8.7, A.8.8.7.1, A.8.8.7.2(4)
Clearance to storage 8.8.6, A.8.8.6
Definition 3.6.4.3
Deflector position ..... 8.8.4, 8.9.4, A.8.8.4.1.1.4(A) to A.8.8.4.1.3, A.8.9.4.1.2.1 to A.8.9.4.1.4, Fig. A.8.9.4.1.3.1, Fig. A.8.9.4.1.3.2
Obstructions to discharge ..... 8.8.5, 8.9.5, 21.5.3, A.8.8.5.1.2 to A.8.8.5.3, A.8.9.5.1.6 to A.8.9.5.3
Permitted uses 8.4.3
Plastics display/storage, retail stores ..... 20.3.1(1), 20.3.2(1), 20.3.3(1), 20.3.4(1), 20.3.5(1), 20.3.6(1)
Protection areas 8.8.2, 8.9.2, A.8.8.2.1, A.8.8.2.2.1, A.8.9.2.1
Sidewall spray 8.9, A.8.9
Spacing 8.8.3, 8.9.3
Upright and pendent ..... 8.8, A.8.8.2.1 to A.8.8.7.2(4)
Exterior projections 8.15.7, A.8.15.7
Extra hazard occupancies ..... 5.4, 11.2.1.4(3), A.5.4.1, A.5.4.2
Acetylene cylinder charging plants 22.10.1.1
Compressed gas and cryogenic fluids, storage, use and handling 22.11.1.2
Group 1 ..... 5.4.1, A.5.4.1
Group 2 ..... 5.4.2, A.5.4.2
Hydraulic calculations 23.5.4, A.23.5.4
Motion picture/television soundstages and production facilities 22.19.2
Nitrate film, rooms containing 22.7.1.1
Openings, protection of ..... 11.2.3.3.5(3)
Plastics storage 17.1.7.2, 17.2.1.3
Roll paper storage 19.1.2.1.2
Spray areas and mixing areas 22.4.1.2, 22.4.1.7
Sprinkler types used in 8.4.1.2
Extended coverage sprinklers 8.8.2.1.3
High temperature sprinklers 11.2.3.2.6
In-rack sprinklers 16.1.8.2
Pendent/upright sprinklers 8.8.2.1.3
Quick-response sprinklers 11.2.3.2.2.2
Special sprinklers ..... 8.4.8.2(4)
System protection area limitations ..... 8.2.1(3), 8.2.3, A.8.2.1.(3)
Water demand requirements ..... 11.2.2.2, 11.2.3.1.4(2), 11.2.3.2.2.2, 11.2.3.3.5(3)
Eye rods 1.2.5

-F-

Face sprinklers 16.1.11.2.1, 17.1.10.2.1
Definition 3.9.3.4, A.3.9.3.4
Fasteners
In concrete 9.1.3, A.9.1.3
Earthquake protection 9.3.5.11.11, 9.3.5.12, 9.3.7, A.9.3.5.12
Powder-driven 9.1.3.9, A.9.1.3.9.3
In steel 9.1.4, A.9.1.4.1
In wood 9.1.5
Fast-response sprinklers .....*see* Early suppression fast-response (ESFR) sprinklers; Quick-response (QR) sprinklers
Feed mains .....*see* Mains
Film, cellulose nitrate motion picture ... 22.7, A.22.7.1.3 to A.22.7.1.10
Finish, ornamental ..... 6.2.6.3; *see also* Ornamental sprinklers
Fire control (definition) 3.3.11
Fire department connections ..... 8.16.1.1.1.3, 8.16.1.1.3.5, 8.16.1.1.4.3, 8.17.5.2, 12.8.5, A.8.16.1.1.3.5, Fig. A.8.16.1.1.4, A.8.17.5.2.2, Fig. A.8.17.5.2.2(a), Fig. A.8.17.5.2.2(b)
Definition 3.8.1.4
Exposure fire protection 7.8.2.2, 7.8.2.3
Hydrostatic tests 25.2.1.10, 26.8.1
Marine systems 26.2.7, 26.4.9, 26.8.1, A.26.2.7.1, A.26.2.7.7
Specifications 6.8, 8.17.2, A.6.8.1, A.8.17.2
Underground steel pipe used with 10.1.3
Fire protection features, *Life Safety Code* D.1.1.1, D.2.1
Fire pumps
Definition 3.8.1.5
Hose demand and 12.8.2, A.12.8.2
Hydroelectric generating plants 22.29.1.7
Marine systems ..... 26.6.1, 26.7.3, 26.7.4.1, 26.7.4.5, 26.8.3.1, 26.8.3.2, A.26.7.3.3 to A.26.7.3.13
Room/house 22.27.1.8
Underground pipe, tests of 10.10.2.4.4
Firestopping ..... 6.3.7.5, 6.4.3.4, 11.2.3.1.4(4)(h), 15.3.3.2, 22.22.2.1.2.1(B)(5), A.22.22.2.1.2.1(B)(5)
Fire suppression (definition) 3.3.12
Fittings ..... 6.4, A.6.4.3.1 to A.6.4.6
Buried 10.2.5, 10.3, A.10.2.5
Circulating closed-loop systems ..... 7.7.1.1.2 to 7.7.1.1.4
Dielectric 7.7.1.1.4
Equivalent pipe lengths 23.4.3
Grooved 10.3.2, 10.8.1.2
Joining with pipe ..... 6.5, 10.3, 10.8.1.2, A.6.5.1.2 to A.6.5.2.4.3
Marine systems 26.2.4, A.26.2.4.1
Materials and dimensions ..... Table 6.4.1
Outside sprinklers 7.8.5
Pressure 10.3.3
Pressure limits 6.4.5, A.6.4.5
Solvent cement, use of 8.3.1.4
Threaded 6.5.1, 10.3.1, 10.8.1.2, A.6.5.1.2
Underground piping ..... 10.2, 10.3, 10.7.1, 10.7.3 to 10.7.5, 10.7.11, A.10.2.4, A.10.2.5
Water-cooling towers 22.21.2.10.1
Welded ..... 6.5.2, 10.8.1.2, A.6.5.2.2 to A.6.5.2.4.3
Fixed guideway transit systems 22.18
Fixed obstructions 8.10.6.3.2, 8.10.7.3.2
Flammable and combustible liquids, protection of 22.2

Copyright 2014 National Fire Protection Association (NFPA). Licensed, by agreement, for individual use and download on October 4, 2014 to LEADER and READER for designated user PATTARAPORN SRITRAKOOL. No other reproduction or transmission in any form permitted without written permission of NFPA. For inquires or to report unauthorized use, contact licensing@nfpa.org.

Flammable and combustible materials, spray application using ..... 22.4, A.22.4.1.1 to A.22.4.2.1
Flat ceilings ..... *see* Ceilings
Flexible listed pipe couplings 9.3.2, 9.3.5.5.9, A.9.3.2
Definition 3.5.7
Flexible sprinkler hose fittings 9.2.1.3.3, A.9.2.1.3.3
Floors
On-floor storage, tires ..... 18.3(2), Table 18.4(a)
Openings 8.15.4, 9.3.4, 23.5.1.5, A.8.15.4, A.9.3.4
Slatted 23.5.1.5
Spaces under 8.15.6
Flow-declining pressure characteristics B.2.1
Flow hydrants (definition) 3.8.2.1.2
Flue spaces ..... *see* Longitudinal flue spaces; Transverse flue spaces
Flumes, water supply connections from 24.2.6
Flushing 8.16.3, 10.10.2.1, 25.2.1.13, A.10.10.2.1
Flush sprinklers (definition) 3.6.2.2
Foam-water sprinkler systems 22.27.1.5, 22.29.1.4, 22.36.1.2, A.22.27.1.5, A.22.36.1.2
Formulas, hydraulic 23.4.2
Foundation walls, piping through/under 24.1.6.2, A.24.1.6.2
Four-way braces 9.3.5.8, A.9.3.5.8.1
Definition 3.11.3, A.3.11.3
F_{pw} ..... Table 9.3.5.3.2(a), Table 9.3.5.3.2(b), 9.3.5.9.3, 9.3.5.9.4, A.9.3.5.9.3.2, A.9.3.5.9.4
Definition 3.11.2
Free-flowing plastic materials .... Fig. 15.2.2, 17.1.2.2; *see also* Plastics storage
Definition 3.9.1.15
Freezers ..... *see* Refrigerated spaces
Freezing, protection from ..... 8.4.9, 8.15.13.2, 8.16.2.6.6, 8.16.4.1, 10.5, 12.4.2, 22.30.2.2, 23.4.4.7.2, A.8.4.9.1, A.8.4.9.3, A.8.16.4.1.1, A.10.5.1, A.12.4.2, A.22.30.2.2, A.23.4.4.7.2; *see also* Antifreeze systems
Friction loss formula 23.4.2.1, 23.4.4.7, A.23.4.4.7.2
Fuel-fired heating unit (definition) 3.3.13
Furnaces 22.16, A.22.16.2.1, A.22.16.2.6
With composite wood joist construction 8.15.1.4
Industrial 8.15.12, A.8.15.12
Residential areas, sprinklers protecting ..... Table 8.3.2.5(c)
Fusible elements 7.3.1.4

-G-

Gaseous agent extinguishing systems ..... 22.4.1.6(1), 22.29.1.4
Gases
Air, substituted for 4.5
Cylinder storage ..... *see* Cylinders
Liquefied natural gas (LNG), production, storage, and handling of 22.13
LP-Gas at utility gas plants 22.12
Gas turbines, installation and use of stationary 22.6, A.22.6.1
Gate valves ..... 6.7.1.3.1, 8.16.1.1.2.3, Fig. A.8.16.1.1.4
Gauges ..... *see* Pressure gauges
Generators
Emergency 22.27.1.7, 22.29.1.4
Turbine ..... *see* Turbine-generators
Glass
Atrium walls D.1.1.1.1, D.2.1.2.1
Windows ..... *see* Window protection
Glycerine 7.6.2.2, 7.6.2.3
Graph sheets 23.3.4, A.23.3.4
Gratings, sprinklers under 8.5.5.3.1.1, 8.5.5.3.3, 8.6.5.3.5, 8.7.5.3.2, 8.8.5.3.2, 8.8.5.3.4, 8.9.5.3.2, 8.10.7.3.4, 8.11.5.3.3, 8.12.5.3.3, A.8.5.5.3.3
Gravity chutes 22.15.2.2, A.22.15.2.2
Gravity tanks 8.16.1.1.5, 24.2.5, A.8.16.1.1.5
Gridded sprinkler systems
Definition 3.4.6, A.3.4.6
Hydraulic calculation procedures 23.4.4.4, A.23.4.4.4
Preaction systems 7.3.2.6
Groove joining methods 6.5.3, 10.3.2, 10.8.1.2, A.6.5.3.1
Ground floors, spaces under 8.15.6
Guards, sprinkler 6.2.8
Guest rooms or suites D.1.1.4, D.1.1.5, D.2.17.2, D.2.18.2

-H-

Hangars, aircraft 22.24
Hangers ..... 6.6, 9.1, A.6.6, A.9.1.1 to A.9.1.4.1
Branch lines, location on 9.2.3, A.9.2.3.2
Component material 9.1.1.6
Definition 3.11.4
Distance between, maximum 9.2.2, A.9.2.2
Earthquakes, subject to 9.3.7
Fasteners
In concrete 9.1.3, A.9.1.3
In steel 9.1.4, A.9.1.4.1
In wood 9.1.5
Installation 9.2, A.9.2
Mains, location on 9.2.4, A.9.2.4.7
Marine systems ..... 26.2.5.1(5), 26.2.5.1(6), 26.2.5.3, A.26.2.5.3
Non-system components, support of 9.1.1.8, A.9.1.1.8.1
Post-installed anchors 9.1.3, A.9.1.3
Powder-driven and welding studs 9.1.3.9, 9.1.4.1, 9.3.7.7, A.9.1.3.9.3, A.9.1.4.1
Risers supported by 9.2.5, A.9.2.5.3, A.9.2.5.4.2
Rods ..... *see* Rods
Trapeze 9.1.1.7, 9.2.1.3.2, 9.2.4.6, A.9.1.1.7
U-hooks ..... *see* U-hooks
Water-cooling towers 22.21.2.10.1
Hardware ..... Chap. 6
Hazardous areas
Protection of piping in 8.16.4.3, A.8.16.4.3
Residential board and care occupancies D.1.1.8.1, D.2.22.2.1
Hazardous materials, storage at piers, wharves, and terminals of 22.22.1.4
Hazardous Materials Code 22.37
Hazards
Adjacent ..... 12.3, A.12.3; *see also* Adjacent occupancies
Multiple hazard classifications, systems with 12.7.2, A.12.7.2
Hazen–Williams formula 23.4.2.1.1, 23.4.3.2, 23.4.4.7.1, B.2.1.3
Heat detectors 22.21.2.8
Heating systems
Sprinklers near components ..... 8.3.2.5(2), 8.3.2.5(9), Table 8.3.2.5(c)
Unit heaters, sprinklers installed below ..... 8.12.5.2(1)
Heat-producing devices
With composite wood joint construction 8.15.1.4
Residential areas, sprinklers protecting ..... 8.3.2.5(8)
Heat-responsive devices, preaction and deluge systems 7.3.1.4
Heat-sensitive materials ..... 26.4.10, A.26.4.10.1(4)
Definition ..... 3.10.4, 26.1.3(4), A.3.10.4, A.26.1.3(4)
Heel (definition) ..... 3.10.5, 26.1.3(5)
Heel angle (definition) ..... 3.10.6, 26.1.3(6)
Hexagonal bushings 8.15.20.2, A.8.15.20.2
High-bay records storage, protection of 20.7, A.20.7.1
High-challenge fire hazard (definition) 3.9.1.16
High-expansion foam systems 12.11, A.12.11
Idle pallets, protection of ..... 12.11.3, 12.12.2.4.1(3), 12.12.4
Palletized, solid pile, bin box, or shelf storage 14.6
Plastic and rubber commodities 15.5
Rack storage 16.1.5, 16.3.4.1
Roll paper storage 19.1.2.1.6, 19.1.2.1.7
Rubber tire storage 18.6
High-piled storage ..... 8.2.1(4), 8.2.3, 8.4.8.2(4), 8.8.2.1.3
Definition 3.9.1.17
High-rise buildings ..... *see* Buildings, multistory
High temperature-rated sprinklers ..... 8.3.2.3 to 8.3.2.5, 8.4.7.3.2 to 8.4.7.3.4, 8.13.2.2, 11.2.3.2.6, 12.6.8, 16.2.4.1.2(1), A.8.3.2.5
High-hazard occupancies, distance beyond perimeters for A.8.3.2.7
Oxidizer solids and liquids storage 22.37.1.4.2

Copyright 2014 National Fire Protection Association (NFPA). Licensed, by agreement, for individual use and download on October 4, 2014 to LEADER and READER for designated user PATTARAPORN SRITRAKOOL. No other reproduction or transmission in any form permitted without written permission of NFPA. For inquires or to report unauthorized use, contact licensing@nfpa.org.

Plastic pallets, protection of ..... 12.12.2.4.3(2)
Plastics storage A.15.2.2
Protection criteria for 14.2.4.2
Roll paper storage 19.1.2.1.4, A.19.1.2.1.4
Steel columns, fire protection of ..... 16.1.4.1(2), 17.1.4.1(3)
High volume low speed fans 11.1.7, 12.1.4, A.11.1.7, A.12.1.4
Definition 3.3.14
High water level protection, dry pipe systems 7.2.5.4
Hoods
Electrical equipment protection 8.15.11.2
Sprinklers in ..... 7.10.2.1, 7.10.4 to 7.10.7, Fig. A.7.10.2
Horizontal barriers ....16.1.9, 17.1.8, 22.37.1.4.4.4(B), A.16.1.9, A.17.1.8
Definition 3.9.3.5
Horizontal ceiling .....*see* Ceilings
Horizontal channels (definition) 3.9.4.2
Hose
Flexible sprinkler hose fittings 9.2.1.3.3, A.9.2.1.3.3
Hydraulic calculations 23.9
Miscellaneous storage ..... Table 13.2.1
Outside ..... 12.8.3, Table 13.2.1, 23.9
Small 8.17.5.1, 12.2, 19.1.1.2, A.8.17.5.1.1, A.12.2, C.5
Water supply allowance ..... 11.1.6, A.11.1.6.1(3) to A.11.1.6.4
Hose connections 8.17.5, 11.1.6.2, 11.1.6.3, A.8.17.5.1.1, A.11.1.6.2, C.5
Fire department .....*see* Fire department connections
Marine systems 26.4.9, 26.8.1
Miscellaneous storage 13.1.1
One-and-one-half-inch .....*see* Hose, small
Small hose 12.2, A.12.2
Storage 12.8.4
Hose houses (definition) 3.8.1.6
Hose stations 22.27.2.1.3
Hose streams 12.7.4, 12.8, A.12.8.1, A.12.8.2
Aircraft engine test facilities 22.26.1.2
Alternative sprinkler system designs 21.4
Baled cotton storage 20.4.1.1, 20.4.1.2
Concealed spaces 11.3.4.3
Marine systems 26.5.3, A.26.5.3
Multiple hazard classifications, systems with 12.7.2, A.12.7.2
Nuclear power plants ..... 22.27.1.1, 22.28.1(2), A.22.27.1.1
Palletized, solid pile, bin box, or shelf storage ..... Table 14.3.1, 14.3.4
Plastics storage 17.3.1.15
Rack storage systems 17.3.1.15
Residential sprinklers 11.3.1.6
Roll paper storage 19.1.1.2, 19.1.1.3
Spray application areas 22.4.1.3
Water-cooling towers 22.21.1.7.3
Hose valves 12.8.5
Hotels D.1.1.4, D.1.1.5, D.2.17, D.2.18
Hydrant butts (definition) 3.8.1.7
Hydrants ..... 8.17.5.1.3(1), 10.7.1, 10.7.3 to 10.7.5, 10.10.2.4.1, 10.10.2.4.2, 22.27.2.1, A.22.27.2.1.2
Definition 3.8.2.1
Hydraulically calculated water demand flow rate ..... 10.10.2.1.3, 11.2.1.1, 11.2.3, A.11.2.1.1, A.11.2.3.1.4(1) to A.11.2.3.4.2, Fig. A.11.3.1.1(a), Fig. A.11.3.1.1(b)
Definition 3.8.1.8
Hydraulically designed systems .....*see also* Hydraulic calculations
Alternative sprinkler system designs 21.4
Circulating closed-loop systems 7.7.1.2, A.7.7.1.2
Definition 3.3.15
Deluge systems 7.3.3.2, 23.6
Exposure systems 11.3.2.1, A.11.3.2.1
Extra hazard occupancies 23.5.4, A.23.5.4
Fire department connections ..... 8.17.2.3(3)
Hazard fire control sprinkler system 12.8.6
Information signs 25.5, A.25.5
In-rack sprinklers 16.1.8.1, 23.8
K-factors less than K-5.6 ..... 8.3.4.2(1)
Marine systems 26.5.1.1
Rack storage 16.1.8.1, 16.2.1.1, 23.8
Residential sprinklers 11.3.1.1, 11.3.1.3, A.11.3.1.1
Revamping of 8.15.20.5, A.8.15.20.5.2
Roll paper storage 19.1.2.2, 19.1.2.3
Hydraulic calculations ..... 12.7.6, Chap. 23
Aircraft engine test facilities 22.26.1.2.2
Cartoned record storage 20.5.6.5
Computer-generated hydraulic reports 23.3.5, A.23.3.5.1
Equivalent pipe lengths, valves and fittings 23.4.3
Exposure systems 23.7, A.23.7
Forms 23.3, A.23.3.2
Formulas 23.4.2
Graph sheets 23.3.4, A.23.3.4
Methods ..... 11.2.1.1, 11.2.3, A.11.2.1.1, A.11.2.3.1.4(1) to A.11.2.3.4.2, Fig. A.11.3.1.1(a), Fig. A.11.3.1.1(b)
Procedures ..... 23.4, A.23.4.1 to A.23.4.4.8, B.2.1.3
Rack storage ..... 16.3.3.4 to 16.3.3.6, 17.1.7.1, 17.2.3.3, 17.3.1.15, 17.3.3.3, 17.3.3.4.1
Rubber tire storage, columns within 18.2.2
Symbols and abbreviations 1.6.2
Terminals, piers, and wharves ..... 22.22.2.1.2.1(B)(5), A.22.22.2.1.2.1(B)(5)
Water curtains 11.3.3
Water supply requirements 11.1.3
Hydraulic control systems 22.29.2.1
Hydraulic junction points 23.4.2.4
Hydraulic release systems 7.3.1.5
Hydraulic systems for gate and valve operators 22.29.1.6
Hydroelectric generating plants 22.29
Hydrostatic tests ..... 10.10.2.2, 25.2, 26.8.1, A.10.10.2.2.1 to A.10.10.2.2.6, A.25.2.1
Hyperbaric chambers, Class A 22.17, A.22.17.1.5, A.22.17.1.8
Hypobaric facilities 22.34, A.22.34.1.11

-I-

Identification .....*see also* Signs, caution
Fire department connections 8.17.2.4.5, 8.17.2.4.7
Hydraulically designed systems 25.5, A.25.5
Pipe 6.3.7.11, A.6.3.7.11.1
Sprinklers 6.2.2, 6.2.3.1, A.6.2.2, A.6.2.3.1, A.6.10
Valves 6.7.4, 8.16.1.1.8, 26.2.6.3, A.6.7.4, A.6.10
In valve pits 8.16.1.4.3
Idle pallets .....*see* Pallets
Incinerators, systems, and equipment ..... 22.15, A.22.15.2.2, Fig. A.21.15.2.2(a) to (h)
Indicating valves 7.2.4.4, 7.10.9, 8.16.1.1.1.1, 8.16.1.1.1.2, 8.16.1.1.4.1, 8.16.1.1.5, 8.16.1.2.4, 8.17.1.4, A.8.16.1.1.5
Cleanrooms 22.23.2.4
Combined dry pipe-preaction systems 7.4.3.5, 7.4.3.7
Definition 3.8.1.15.2
Spray application areas 22.4.1.5
Industrial occupancies, high-rise D.1.1.11, D.2.27.1.1
Industrial ovens and furnaces 8.15.12, A.8.15.12
Information technology equipment ... 22.14, A.22.14.2.1, A.22.14.2.3
In-rack sprinklers ..... 8.13, 16.1.8, 23.8, C.3, Annex C
Cartoned record storage ..... 20.5.6.3 to 20.5.6.5
Control mode specific application (CMSA) sprinklers ..... Table 16.2.2.1, 16.2.2.2, 16.3.2.2
Discharge pressure 13.3.2, 16.2.2.7.8
High-expansion foam systems 16.1.5.2
Horizontal barriers ... 16.1.9, 17.1.8, 17.1.10.2.2, A.16.1.9, A.17.1.8
Hose connections and ..... 8.17.5.1.3(5)
Location ..... 8.6.3.4.3, 12.1.3.4.4 to 12.1.3.4.8, 16.3.1.3.1, A.16.3.1.3.1.1 to A.16.3.1.3.1.3
Miscellaneous storage 13.3
Obstructions to discharge 8.13.5
Oxidizer solids and liquids storage ..... 22.37.1.4.3, 22.37.1.4.4.2(A), 22.37.1.4.4.4

Copyright 2014 National Fire Protection Association (NFPA). Licensed, by agreement, for individual use and download on October 4, 2014 to LEADER and READER for designated user PATTARAPORN SRITRAKOOL. No other reproduction or transmission in any form permitted without written permission of NFPA. For inquires or to report unauthorized use, contact licensing@nfpa.org.

Pipe
Hangers 9.2.1.2
Size 16.1.8.1, 23.8.1
Plastics storage 17.1.5.3, 17.1.5.4, 17.1.7, 17.1.8, 17.1.10.2, 17.3.3.4, A.17.1.7.4, A.17.1.8, A.17.3.3.4.5
Retail display/storage ..... 20.3.4 to 20.3.6
Refrigerated spaces 7.9.2.8.3, 7.9.2.8.4
Solid shelf racks 16.1.6.3, 16.1.6.4, 17.1.5.3, 17.1.5.4
Spacing
Oxidizer solids and liquids storage ..... 22.37.1.4.4.2(A)(2), 22.37.1.4.4.4(E)
Storage over 25 ft ..... 16.3.1.3.2, 16.3.2.7.1 to 16.3.2.7.6, 17.3.1.9 to 17.3.1.12, 17.3.3.4.4, A.16.3.1.3.2.4, A.17.3.1.10
Storage up to and including 25 ft in height ..... 17.2.1.5, 17.2.2.6.1 to 17.2.2.6.6, 17.2.3.4.1 to 17.2.3.4.7, A.17.2.1.5.3, A.17.2.2.6.3, A.17.2.3.4.5
Tire storage 18.5.2
Steel columns ..... 16.1.4.1.1, 17.1.4.1(1)
Storage over 25 ft. ..... 12.1.3.4.5, 12.1.3.4.6, 16.3.1.3, 16.3.2.7, 16.3.4, 17.3.3.4, A.16.3.1.3.1.1 to A.16.3.1.3.2.4, A.17.3.3.4.5
Storage up to and including 25 ft in height 12.1.3.4.4, 12.1.3.4.5, 16.2.2.2, 16.2.4, 17.2.1.5, 17.2.2.6, A.16.2.4.1.1, A.17.2.1.5.3, A.17.2.2.6.3, C.19, C.20
System control valves 8.16.1.6, A.8.16.1.6
Tire storage 18.2.3, 18.5
Water demand .....*see* Water demand
Inspections ..... 8.1.2, Chap. 27, A.8.1.2
Cleanrooms 22.23.2.5
Ducts, sprinklers in 8.15.13.3
Marine systems 26.9
Installation ..... Chap. 8
Application of sprinkler types 8.4, A.8.4
Baffles 8.6.3.4.2
Basic requirements 8.1, A.8.1
Fire protection features, *Life Safety Code* D.2.1.2
Location ..... 8.5 to 8.12, A.8.5.5.1 to A.8.12.5.2
Pipe hangers 9.2, A.9.2
Piping ..... 8.16, 10.7, A.8.16.1.1 to A.8.16.4.3
Protection area per sprinkler 8.5.2, 8.7.2, 8.8.2, 8.9.2, 8.11.2, 8.12.2, A.8.8.2.1, A.8.8.2.2.1, A.8.9.2.1, A.8.11.2, A.8.12.2.2.3
Spacing ..... 8.5.3, 8.6.3, 8.7.3, 8.8.3, 8.9.3, 8.11.3, 8.12.3, A.8.6.3.2.3, A.8.6.3.2.4, A.8.11.3.1, Fig. A.8.12.2.2.3, A.8.12.3.1(3)
Special situations ..... 8.15, A.8.15.1.2 to A.8.15.23.3
System protection area limitations 8.2, A.8.2.1, A.8.2.5
Use of sprinklers ..... 8.3, 8.5, A.8.3.1.1 to A.8.3.3.1, A.8.5.4.1 to A.8.5.6.1
Waterflow alarms 6.9.1
Institutional sprinklers (definition) 3.6.3.3
Instructions, system 25.4, 26.9
Intermediate level sprinklers 8.5.5.3.3, 8.6.5.3.5, 8.8.5.3.4, 8.12.5.3.3, 8.13.3.1, 16.1.6, 17.1.5.1, 20.5.6.3, A.8.5.5.3.3, C.3, C.11
Definition 3.6.3.4
Intermediate temperature-rated sprinklers ..... 8.3.2.4, 8.3.2.5, 8.4.7.3.2, 8.4.7.3.3, 12.6.8.1, 12.6.9, 16.2.4.1.2(1), A.8.3.2.5
In-rack sprinklers 8.13.2.2
Marine systems 26.4.1
International shore connections ... 26.2.7, 26.8.1, A.26.2.7.1, A.26.2.7.7
Definition ..... 3.10.7, 26.1.3(7), A.3.10.7
Isolation valves 10.6.2

-J-

Joints ..... 6.5, A.6.5.1.2 to A.6.5.2.4.3
Brazed and soldered 6.5.4, A.6.5.4
Building expansion ..... 9.3.2.3.1(4), A.9.3.2.3.1(4)
End treatment 6.5.6
Groove joining methods 6.5.3, A.6.5.3.1
Restraint ..... 10.8, A.10.8.1.1 to A.10.8.3.5
Underground pipe ..... 10.2.4, 10.3, 10.6.7, 10.8, A.10.2.4, A.10.6.7, A.10.8.1.1 to A.10.8.3.5
Welded ..... 6.5.2, A.6.5.2.2 to A.6.5.2.4.3
Joists .....*see* Wood joist construction

-L-

Laboratories
Chemicals, using 22.8
Motion picture film 22.7.2.3
Laced tire storage ..... Table 18.4(d)
Definition 3.9.4.3
Lakes, water supply connections from 24.2.6
Landings 8.10.6.3.2, 8.10.7.3.2
Lateral braces ..... 9.3.5.5, 9.3.5.7.1, 9.3.5.9.6, A.9.3.5.5.1, Annex E
Definition 3.11.5
Libraries ..... 22.30, A.22.30.1 to A.22.30.2.3
Stack areas 8.15.10, A.8.15.10
Life Safety Code ..... Annex D
Light fixtures, sprinkler distance from ..... Table 8.3.2.5(c), 8.7.5.1.2, 8.7.5.1.3
Light hazard occupancies ..... 5.2, 11.2.1.4(1), 11.2.2.7, 12.9.2(4), 12.9.2(10), A.5.1, A.5.2, A.12.9.2(4), A.12.9.2(10)
Compact storage 20.6.1, A.20.6.1
Cultural resource properties 22.30.1.1, A.22.30.1.1
Fire department connections 8.17.5.2.1
Open-grid ceilings ..... 8.15.14(1)
Openings, protection of 11.2.3.3.5
Pipe schedule 23.5.2, A.23.5.2.6
Sprinkler types used in ..... 8.4.2(1), 12.6.7.1, 12.6.7.2
Control modes specific application (CMSA) sprinklers 8.4.7.4.1
Extended coverage sprinklers 8.8.5.2.2, 8.9.5.2.2.1, A.8.9.5.2.2.1
Exterior projections ..... 8.15.7.3(2)
K-factors less than K-5.6 ..... 8.3.4
Pendent/upright sprinklers 8.6.4.1.1.3, 8.6.5.2.1.4, 8.6.5.2.2.1, 8.6.5.3.2, 8.8.5.2.2, A.8.6.5.2.1.4, A.8.6.5.2.2.1
Quick-response sprinklers ..... 11.2.3.2.3.1(2)
Sidewall sprinklers 8.7.5.2.2.1, 8.9.5.2.2.1, A.8.7.5.2.2.1, A.8.9.5.2.2.1
Special sprinklers ..... 8.4.8.2(3)
Thermal sensitivity 8.3.3.1, A.8.3.3.1
System protection area limitations ..... 8.2.1(1), 8.2.3
Water demand requirements ..... 11.2.2.1, 11.2.3.1.4(1), 11.2.3.1.4(4)(d), 11.2.3.1.4(4)(j), 11.2.3.3.5, A.11.2.3.1.4(1), A.11.2.3.1.4(4)(d), A.11.2.3.1.4(4)(j)
Lighting fixtures, sprinklers obstructed by ..... 8.11.5.3.2, 8.12.5.1.1, 8.12.5.2(1), 8.12.5.3.1(1)
Limited area systems 4.2
Limited-combustible material (definition) 3.3.16, A.3.3.16
Linen handling systems 22.15, A.22.15.2.2
Lines, branch .....*see* Branch lines
Lintels 8.7.4.1.3, 8.9.4.1.3, A.8.7.1.3.2, A.8.7.4.1.3.3, A.8.9.4.1.3.1, A.8.9.4.1.3.2
Liquefied natural gas (LNG), production, storage, and handling of 22.13
Listed
Definition 3.2.3, A.3.2.3
Hangers 9.1.1.5, A.9.1.1.5.3
Pipe and tubing 6.3.4, A.6.3.7
System components and hardware 6.1.1, A.6.1.1
Underground pipe 10.1.1, A.10.1.1
Lodging houses D.1.1.3, D.2.16
Longitudinal braces 9.3.5.6, 9.3.5.7.1, 9.3.5.9.6, 17.3.1.10, 17.3.1.11, A.17.3.1.10
Definition 3.11.6

Copyright 2014 National Fire Protection Association (NFPA). Licensed, by agreement, for individual use and download on October 4, 2014 to LEADER and READER for designated user PATTARAPORN SRITRAKOOL. No other reproduction or transmission in any form permitted without written permission of NFPA. For inquires or to report unauthorized use, contact licensing@nfpa.org.

Longitudinal flue spaces 13.3.4.3, 13.3.4.4, 16.1.10.1, 16.1.11.1.1, 16.1.11.2.2, 16.2.1.4.2.3, 16.3.1.3.2.4, 16.3.2.7.3, 16.3.2.7.5, 17.1.7.4, 17.1.9.1, 17.1.10.1, 17.1.10.2.2, 17.2.1.5.3, 17.2.1.5.4, 17.2.2.6.3, 17.2.3.4.5, 17.2.3.4.6, 17.3.3.4.5, 17.3.3.4.6, A.16.2.1.4.2.3, A.16.3.1.3.2.4, A.17.1.7.4, A.17.2.1.5.3, A.17.2.2.6.3, A.17.2.3.4.5, A.17.3.3.4.5
- Carton records storage 20.5.2.3
- Control mode specific application (CMSA) 16.2.2.7.3, 16.2.2.7.5, A.16.2.2.7.3
- Definition 3.9.3.6, A.3.9.3.6
- Early suppression fast-response (ESFR) sprinklers ... 16.2.4.1.2(6), 16.3.3.5.2, 17.3.3.4.2, 17.4.1.2(6)
- High bay records storage 20.7.3
- Oxidizer solids and liquids storage ..... 22.37.1.4.3(C)
- Plastics display/storage, retail stores ..... 20.3.1(12), 20.3.5(7), 20.3.7(7)

Looped sprinkler systems (definition) ..... 3.4.7, A.3.4.7; *see also* Circulating closed-loop sprinkler systems
Louver ceilings ..... *see* Open-grid ceilings
Low-pressure blowoff valves ..... 8.3.2.5(3)
LP-Gas, storage and handling at utility gas plants 22.12

-M-

Machine rooms, elevator 8.15.5.3
Main drains 8.16.2.4, A.8.16.2.4
- Test connections .... 8.16.2.4.6, 8.17.4.1, A.8.17.4.1, Fig. A.8.17.4.1

Main drain valves
- Multistory buildings 8.16.1.5, A.8.16.1.5.1
- Test 25.2.3.4, A.25.2.3.4.2

Mains ... 10.6.3, 12.8.3; *see also* Cross mains; Private fire service mains; Yard mains
- Cultural resource properties 22.30.2.1, A.22.30.2.1
- Feed ..... 8.16.4.1.3, 9.3.5.5.1, 9.3.5.5.7, Fig. A.3.5, A.9.3.5.5.1
  - Definition 3.5.6
- Hangers, location 9.2.4, A.9.2.4.7
- Heavily loaded, protection of 10.6.6
- Hose allowance 11.1.6.2, A.11.1.6.2
- Nuclear power plants 22.27.1.2, 22.27.2.1, A.22.27.2.1.2
- Size of 24.1.3, A.24.1.3.3
- Steep grades, restraint on 10.8.1.3

Maintenance, system ..... 8.1.2, Chap. 27, A.8.1.2
- Cleanrooms 22.23.2.5
- Ducts, sprinklers in 8.15.13.3
- Marine systems 26.9

Marine systems ..... Chap. 26
- Acceptance 26.8
- Definitions ..... 3.10.8, 26.1.3(8), A.3.10.4 to A.3.10.9, A.26.1.3(8)
- Design approaches 26.5, A.26.5.2, A.26.5.3
- Fire department connections 26.2.7, A.26.2.7.1, A.26.2.7.7
- Installation requirements ..... 26.4, A.26.4.2 to A.26.4.12.1
- International shore connections 26.2.7, 26.8.1, A.26.2.7.1, A.26.2.7.7
- Maintenance 26.9
- Occupancy classifications 26.1.4, A.26.1.4
- Partial installation 26.1.5, A.26.1.5
- Piping ..... 26.2.2, 26.2.4, 26.2.5, 26.3.3, 26.4.10, 26.7.4.5, A.26.2.2, A.26.2.4.1, A.26.2.5.1 to A.26.2.5.4, A.26.4.10.1(4)
- Plans and calculations 26.6, A.26.6.4
- Requirements 26.3, A.26.3.1
- Spare sprinklers 26.2.3
- System components, hardware, and use ..... 26.2, A.26.2.1 to A.26.2.7.7
- Valves 26.2.6, 26.7.4.2, A.26.2.6.1
- Water supplies ..... 26.7, A.26.7.2.7 to A.26.7.4.6
  - Definition 3.10.10

Marine thermal barriers A.26.2.2
- Definition ..... 3.10.9, 26.1.3(9), A.3.10.9, A.26.1.3(9)

Measurement, units of 1.6.1
Mechanical damage, protection from 8.16.4.3.1, 8.16.5
Mercantile occupancies D.1.1.9, D.1.1.10, D.2.23, D.2.24
Metal/nonmetal mining and metal mineral processing facilities ..... 22.36, A.22.36.1.2 to A.22.36.1.3.4
Meters 24.1.7, A.24.1.7
Mezzanines ..... 8.2.2, 23.5.1.5, D.2.3.1.1(1), D.2.4.1.1(1)
Mines
- Coal 22.35, A.22.35.1.1.1
- Metal/nonmetal mining and metal mineral processing facilities ..... 22.36, A.22.36.1.2 to A.22.36.1.3.4

Miscellaneous storage ..... 12.6.7, Chap. 13
- Definition 3.9.1.18, A.3.9.1.18
- Density/area method 13.2.2
- Design basis 13.2
- Discharge criteria 13.2.1, 13.3.2
- Hose connections 13.1.1
- In-rack sprinklers 13.3
- Tires (definition) ..... 3.9.4.4, A.3.9.4.4; *see also* Tires, rubber

Mixed commodities 5.6.1.2
Mixing rooms, sprinklers for 6.2.6.4, 22.4.1.4, A.6.2.6.4.2
Motion picture studio soundstages and production facilities 22.19, A.22.19.4, A.22.19.5
Motor vehicle components ...*see* Automotive components on portable racks
Moving stairways 8.15.4, A.8.15.4
Multicycle systems 7.5
- Definition 3.4.8

Multistory buildings ..... *see* Buildings, multistory
Museums ..... 22.30, A.22.30.1 to A.22.30.2.3

-N-

National Electrical Code 22.31, A.22.31.2.3
Net vertical force 9.3.5.10
- Definition 3.11.7

New technology 1.7
Nitrate film ..... 22.7, A.22.7.1.3 to A.22.7.1.10
Nitrogen
- Air, substituted for 4.5
- Pressurized systems 7.2.6.8, 7.9.2.4, 7.9.2.7, A.7.9.2.4, A.7.9.2.7

Noncombustible material (definition) 3.3.17
Nonfire protection connections to sprinkler systems ... 7.7, A.7.7.1.2
- Working plans ... 23.1.5, A.23.1.5, Fig. A.23.1.5(a), Fig. A.23.1.5(b)

Normal pressure formula 23.4.2.3
Nozzles (definition) ..... 3.6.4.4; *see also* Spray nozzles
Nuclear power plants
- Advanced light water reactor electric generating plants ..... 22.27, A.22.27.1.1 to A.22.27.1.6
- Light water ..... 22.27, 22.28, A.22.27.1.1 to A.22.27.1.6

-O-

Obstructed construction ... 8.4.3(6), 8.4.6.3, 8.8.4.1.2, A.8.4.6.3; *see also* Obstructions to sprinkler discharge
- Definition 3.7.1, A.3.7.1

Obstructions to sprinkler discharge ..... 8.5.5, 8.7.5, 8.9.5, 8.12.5, A.8.5.5.1 to A.8.5.5.3.3, Fig. A.8.5.5.1, A.8.7.5.1.6 to A.8.7.5.3, A.8.9.5.1.6 to A.8.9.5.3, A.8.12.5.2; *see also* Early suppression fast-response (ESFR) sprinklers; Pendent sprinklers; Sidewall sprinklers; Upright sprinklers
- Alternative sprinkler system designs 21.5
- Circulating closed-loop systems 7.7.1.4
- Continuous obstruction 8.5.5.2.1, 8.6.5.2.1.1, 8.7.5.2.1.1, 8.8.5.2.1.1, 8.9.5.2.1.1, 8.11.5.2.1.1
  - Definition 3.3.18.1
- Control mode specific application (CMSA) sprinklers 8.11.4.1.2, 8.11.5, A.8.11.5
- Double joist 8.6.4.1.5
- Earthquake damage, protection of piping from 9.3.1.3
- Extended coverage sprinklers ..... 8.8.5, A.8.8.5.1.2 to A.8.8.5.3
- Fixed 8.5.5.3.1, 8.6.5.3.3, 8.7.5.3.2, 8.8.5.3.2, 8.9.5.3.2, A.8.5.5.3.1, A.8.6.5.3.3

Copyright 2014 National Fire Protection Association (NFPA). Licensed, by agreement, for individual use and download on October 4, 2014 to LEADER and READER for designated user PATTARAPORN SRITRAKOOL. No other reproduction or transmission in any form permitted without written permission of NFPA. For inquires or to report unauthorized use, contact licensing@nfpa.org.

Hazard, discharge prevented from reaching 8.5.5.3, 8.6.5.3, 8.7.5.3, 8.8.5.3, 8.9.5.3, 8.10.6.3, 8.10.7.3, 8.11.5.3, A.8.5.5.3, A.8.6.5.3, A.8.7.5.3, A.8.8.5.3, A.8.9.5.3, A.8.10.6.3, A.8.10.7.3, A.8.11.5.3
In-rack sprinklers 8.13.5
Motion picture/television soundstages and production facilities 22.19.1, 22.19.2
Noncontinuous obstruction 8.5.5.2.1, 8.6.5.2.1.1, 8.7.5.2.1.1, 8.8.5.2.1.1, 8.9.5.2.1.1, 8.11.5.2.1.1
Definition 3.3.18.2
Ovens and furnaces A.21.16.2.6
Pattern development ..... 8.5.5.2, 8.6.5.2, 8.7.5.2, 8.8.5.2, 8.9.5.2, 8.10.6.2, 8.10.7.2, 8.11.5.2, A.8.5.5.2, A.8.6.5.2.1.3 to A.8.6.5.2.2.1, A.8.7.5.2.1.3 to A.8.7.5.2.2.1, A.8.8.5.2.1.3, A.8.8.5.2.1.9, A.8.9.5.2.1.3 to A.8.9.5.2.2.1, A.8.10.6.2.1.3, A.8.10.6.2.1.9, A.8.10.7.2.1.3, A.8.10.7.2.1.7, A.8.11.5.2.1.3
Performance objectives 8.5.5.1, 8.6.5.1, 8.7.5.1, 8.8.5.1, 8.9.5.1, 8.10.6.1, 8.10.7.1, 8.11.5.1, A.8.5.5.1, A.8.6.5.1.2, A.8.7.5.1.6, A.8.8.5.1.2, A.8.9.5.1.6, A.8.10.7.1.5, A.10.7.1.6
Residential sprinklers ... 8.10.5 to 8.10.7, A.8.10.6.2.1.3 to A.10.7.3
Suspended or floor-mounted vertical 8.6.5.2.2, 8.7.5.2.2, 8.8.5.2.2, 8.9.5.2.2, 8.10.6.2.2, 8.10.7.2.2, A.8.6.5.2.2.1, A.8.7.5.2.2.1, A.8.9.5.2.2.1
Occupancy classifications ... 5.1, 11.2.1.2, A.5.1; *see also* Extra hazard occupancies; Light hazard occupancies; Ordinary hazard occupancies; Special occupancy hazards
Changes 8.3.2.6
Marine 26.1.4, A.26.1.4
Multiple hazard classifications, systems with 12.7.2, A.12.7.2
Sprinkler types selected for use 8.4.1, 8.4.2, 8.4.4, 8.4.5, A.8.4.5.1
Water demand requirements, pipe schedule method 11.2.2, A.11.2.2.6
Occupancy hazard fire control design approach ..... 11.2, A.11.2.1.1 to A.11.2.3.4.2
Old-style/conventional sprinklers ..... 8.6.3.4.4, 8.15.14(1), 22.22.2.1.2.1(B), A.22.22.2.1.2.1(B)(3), A.22.22.2.1.2.1(B)(5)
Definition 3.6.4.5
On-side tire storage ..... Table 18.4(a), Table 18.4(c), Table 18.4(d)
Definition 3.9.4.5
On-tread tire storage ..... Table 18.4(a), Table 18.4(c), Table 18.4(d)
Definition 3.9.4.6
Open-grid ceilings 8.15.14, A.8.15.14
Definition A.3.7.2
Openings ..... *see also* Vertical shafts
Pipe through, clearance for 9.3.4, A.9.3.4
Protection of 11.2.3.3.5
Floors openings 8.15.4, A.8.15.4
Large openings 8.15.4.4
Open joist construction ..... *see* Wood joist construction
Open racks (definition) 3.9.3.7.7
Open sprinklers 7.8.8.6, 8.4.4
Definition 3.6.4.6
Open-top containers ..... 8.4.6.1.2, 16.1.7, 16.2.3.3, 16.3.3.2, 17.1.6, 17.2.3.1.1(2), 17.3.3.1.2, C.12
Definition 3.9.1.19, A.3.9.1.19
High bay records storage 20.7.1, A.20.7.1
Open trusses 8.12.5.1.1, 8.12.5.3.2
Operational tests, system .... 25.2.3, 26.8.3, A.25.2.3.2 to A.25.2.3.4.2
Ordinary hazard occupancies .... 5.3, 11.2.1.4(2), 11.2.2.7, 12.9.2(4), 12.9.2(10), A.5.3, A.12.9.2(4), A.12.9.2(10)
Airport terminals 22.25.1.1, 22.25.1.2
Compressed gas and cryogenic fluids, storage, use and handling 22.11.1.1
Fire department connections 8.17.5.2.1
Group 1 ..... 5.3.1, A.5.3.1
Group 2 ..... 5.3.2, A.5.3.2
Laboratories using chemicals 22.8.1
Open-grid ceilings ..... 8.15.14(1)
Openings, protection of ..... 11.2.3.3.5(3)
Pipe schedule 23.5.3, A.23.5.3.9
Roll paper storage 19.1.2.1.1
Roof, exterior 7.8.8.6
Sprinkler types used in ..... 8.4.2(2), 12.6.7.1 to 12.6.7.3
Control modes specific application (CMSA) sprinklers 8.4.7.4
Exterior projections ..... 8.15.7.3(2)
Pendent/upright sprinklers 8.6.4.1.1.3, 8.6.5.2.1.4, 8.6.5.3.2, A.8.6.5.2.1.4
Quick-response sprinklers ..... 11.2.3.2.3.1(2)
Special sprinklers ..... 8.4.8.2(3)
System protection area limitations ..... 8.2.1(2), 8.2.3
Water demand requirements ..... 11.2.2.1, 11.2.3.1.4(1), 11.2.3.1.4(4)(d), 11.2.3.1.4(4)(j), 11.2.3.3.5(3), A.11.2.3.1.4(1), A.11.2.3.1.4(4)(d), A.11.2.3.1.4(4)(j)
Ordinary temperature-rated sprinklers ... 12.6.8, 12.6.9, 16.2.4.1.2(1)
Cartoned record storage 20.5.6.3, 20.5.6.4.3
Compact storage 20.6.3
In-rack sprinklers 16.2.3.6.2, 16.3.3.5, 17.2.3.4.2, 17.3.3.4, A.17.3.3.4.5
Oxidizer solids and liquids storage ..... 22.37.1.4.3(A), 22.37.1.4.4.2(A)(3), 22.37.1.4.4.4(G)
Plastics storage A.15.2.2
Protection criteria for 14.2.4.1
Steel columns, fire protection of ..... 16.1.4.1(2), 17.1.4.1(3)
Organic peroxide formulations, storage of 22.37.1.3
Orifice sizes
Hydraulic calculation procedures 23.4.4.8, 23.4.4.9, A.23.4.4.8, A.23.4.4.9
Nominal sizes ..... Table A.6.2.3.1
Ornamental finishes 6.2.6.3
Ornamental sprinklers 6.2.6.3
Definition 3.6.3.5
Outlet fittings 6.5.5.2
Outside hose ..... *see* Hose
Outside sprinklers .... 7.8, 11.3.2, A.7.8.4.2.1, A.7.8.4.2.3, A.11.3.2.1; *see also* Exposure protection systems
Ovens 8.15.12, 22.16, A.8.15.12, A.22.16.2.1, A.22.16.2.6
Overhangs 8.15.1.2.18
Overhead doors
Protection of area below ..... 8.4.2(3)
Sprinklers obstructed by ... 8.7.5.3.2, 8.8.5.3.2, 8.9.5.3.2, 8.12.5.3.4
Owner's certificate 4.3, A.4.3
Oxidizer solids and liquids, indoor storage of 22.37.1.4
Oxygen-fuel gas system for welding, cutting, and allied processes 22.9

-P-

Packaging (definition) ... 3.9.1.20; *see also* Containers; Encapsulation
Paddle-type waterflow alarms 6.9.2.4, A.6.9.2.4
Painting, of sprinklers 6.2.6.2, 6.2.6.4.3, 22.4.2.2, A.6.2.6.2
Palletized storage ..... 5.6.3.1(1)
Alternative sprinkler system designs 21.2, A.21.2
Definition 3.9.2.3
Discharge criteria ..... Table 13.2.1
Early suppression fast-response (ESFR) sprinklers ..... 14.4, Table 14.4.1, 15.4
Hose steam demand and water supply duration 14.3.4
Oxidizer solids and liquids storage ..... Table 22.37.1.4.1
Plastic and rubber commodities 15.1, Chap.15, A.15.1.1, C.8
Special design for 14.5
Sprinkler system design ..... Chap. 14
Tires ..... Table 18.4(a) to (d)
Definition 3.9.4.7
Pallets ..... *see also* Plastics
Idle 12.12, A.12.12, C.7
High-expansion foam system protection 12.11.3
Plastic 12.12.2
Wood 12.12.1, A.12.12.1.1, C.7
Rack storage 16.2.1.3.4.7
Slave 16.2.1.3.4.7
Definition 3.9.1.24

Copyright 2014 National Fire Protection Association (NFPA). Licensed, by agreement, for individual use and download on October 4, 2014 to LEADER and READER for designated user PATTARAPORN SRITRAKOOL. No other reproduction or transmission in any form permitted without written permission of NFPA. For inquires or to report unauthorized use, contact licensing@nfpa.org.

Types, and commodity classification 5.6.2, A.5.6.2.2, A.5.6.2.3
Unit load (definition) 3.9.1.26
Wood ..... *see* Wood pallets
Panel construction (definition) A.3.7.1
Pantries 8.15.8.2, A.8.15.8.2
Paper ..... *see also* Compact storage; Roll paper storage; Tissue paper
Carton records storage
Definition 3.9.1.3, A.3.9.1.3
Sprinkler protection 20.5, C.25
Definition 3.9.5.5
High-bay records storage, protection of 20.7, A.20.7.1
Partial systems ..... 12.8.5(3), 26.1.5, A.26.1.5
Pendent sprinklers ..... 8.6, 12.6.2, 12.6.3, A.8.6.2.2.1 to A.8.6.7.2(4)
Cabinets, protection for 8.10.7.1.5.1
Ceiling pockets ..... .8.6.7, 8.8.7, A.8.6.7.1, A.8.6.7.2(4), A.8.8.7.1, A.8.8.7.2(4)
Clearance to storage 8.6.6, 8.8.6, A.8.8.6
Combined dry pipe-preaction systems ..... 7.4.2.4(3)
Compact storage 20.6.3
Concealed spaces, in 8.6.4.1.4
Definition 3.6.2.3
Deflector position .... 8.6.4, 8.8.4, 8.10.4.1, 8.12.4.1.1 to 8.12.4.1.3, A.8.6.4.1.2(5) to A.8.6.4.1.3.3, A.8.8.4.1.1.4(A) to A.8.8.4.1.3
Dry pipe systems ..... 7.2.2(3), 7.2.2(5)
Elevator hoistways 8.15.5.5, A.8.15.5.5
Extended coverage ..... 8.8, A.8.8.2.1 to A.8.8.7.2(4)
Hanger assembly for 9.2.3.4.4, 9.2.3.5.2, A.9.2.3.4.4, A.9.2.3.5.2
Marine terminals, piers, and wharves ..... 22.22.2.1.2.1(B), A.22.22.2.1.2.1(B)(3), A.22.22.2.1.2.1(B)(5)
Obstructions to discharge ..... 8.6.4.1.2, 8.6.4.1.5, 8.6.5, 8.8.5, 8.10.6, A.8.6.4.1.2(5), A.8.6.5.1.2 to A.8.6.5.3.3, A.8.8.5.1.2 to A.8.8.5.3, A.8.10.6.2.1.3 to A.8.10.6.3
Oxidizer solids and liquids storage ..... 22.37.1.4.4.4(F)
Palletized, solid pile, bin box, or shelf storage ..... Table 14.4.1
Permitted uses 8.4.1
Preaction systems ..... 7.3.2.5(3), 7.3.2.5(5)
Protection areas 8.6.2, 8.8.2, A.8.6.2.2.1, A.8.8.2.1, A.8.8.2.2.1
Residential 8.10.4.1
Return bends 8.15.19.1, 8.15.19.4, 26.4.8
Roll paper storage ..... Table 19.1.2.3
Roof protection use 7.8.8.6
Spacing 8.6.3, 8.8.3, A.8.6.3.2.3, A.8.6.3.2.4
Penstocks, water supply connections from 24.2.6
Peroxide, organic 22.37.1.3
Piers ..... 22.22, A.22.22.1.1 to A.22.22.2.1.2.1(B)(5)
Piles ..... *see* Solid-piled storage
Pile stability ..... *see* Stable piles; Unstable piles
Pilot line detectors 8.14
Definition 3.6.3.6
Pipe friction loss 23.4.2.1.1, 23.4.4.7, A.23.4.4.7.2
Pipes and piping ..... Fig. A.3.5; *see also* Fittings; Risers; Valves
Above drop-out ceilings 8.15.15.4, A.8.15.15.4
Aboveground ..... 6.3, A.6.3.2 to A.6.3.7.11.1
Antifreeze systems ..... 7.6.3, A.7.6.3.1 to A.7.6.3.6
Bending 6.3.7.10
Circulating closed-loop systems ..... 7.7.1.1.2 to 7.7.1.1.4, 7.7.1.2, A.7.7.1.2
Clearance 9.3.4, A.9.3.4
Couplings ..... *see* Couplings
Drainage ..... 8.16.2, A.8.16.2.1 to A.8.16.2.6.1
End treatment 6.5.6
Equivalent lengths, valves and fittings 23.4.3
Flushing of ..... *see* Flushing
Foundation walls, piping through/under 24.1.6.2, A.24.1.6.2
Grounding, use for 10.6.8, A.10.6.8
Hazardous areas, protection of piping in 8.16.4.3, A.8.16.4.3
Heat-sensitive materials ..... 26.4.10, A.26.4.10.1(4)
Hose connections for 8.17.5.1.3
Hydraulic calculations 23.4.4.5.1, 23.4.4.7, A.23.4.4.5.1, A.23.4.4.7.2
Hydrostatic tests 25.2.1.10, 26.8.1
Identification 6.3.7.11, A.6.3.7.11.1
Installation ..... 8.16, 10.7, A.8.16.1.1 to A.8.16.4.3
Joining ..... *see* Joints
Marine systems ..... 26.2.2, 26.2.4, 26.2.5, 26.3.3, 26.4.10, 26.7.4.5, A.26.2.2, A.26.2.4.1, A.26.2.5.1 to A.26.2.5.4, A.26.4.10.1(4)
Materials and dimensions ..... 6.3.1 to 6.3.7, Table 6.3.1.1, A.6.3.1.1.1 to A.6.3.7
Outside sprinklers 7.8.5
Private fire service mains ..... *see* Private fire service mains
Protection ..... 8.16.4, A.8.16.4.1.1 to A.8.16.4.3
Corrosion ..... *see* Corrosion resistant piping
Earthquake damage ..... 9.3, A.9.3.1 to A.9.3.6.6
Freezing ..... *see* Freezing, protection from
Hazardous areas, protection of piping in 8.16.4.3, A.8.16.4.3
Mechanical damage 8.16.4.3.1, 8.16.5
Refrigerated spaces 7.9.2.1, 7.9.2.3, 7.9.2.7, A.7.9.2.7
Size ..... *see also* Pipe schedule systems
Fire department connections 8.17.2.3, A.8.17.2.3
In-rack sprinklers 16.1.8.1, 23.8.1
Light hazard occupancies ..... 23.5.2.2, 23.5.2.4 to 22.5.2.6, A.23.5.2.6
Ordinary hazard occupancies .... 23.5.3.4, 23.5.3.7 to 22.5.3.10, A.23.5.3.9
Solvent cement, use of 8.3.1.4
Sprinklers below ceilings ..... 8.15.20, A.8.15.20.1 to A.8.15.20.5.2
Sprinklers obstructed by ..... 8.5.5.2.2, 8.7.5.2.1.3, 8.8.5.2.1.3, 8.9.5.2.1.3, 8.10.6.2.1.3, 8.10.6.2.1.7, 8.10.6.2.1.8, 8.10.7.2.1.3, 8.11.5.2.1.3, 8.11.5.2.2, 8.12.5.3.1(1), A.8.7.5.2.1.3, A.8.8.5.2.1.9, A.8.9.5.2.1.3, A.8.10.6.2.1.3, A.8.10.7.2.1.3, A.8.11.5.2.1.3
Steel ..... *see* Steel
Sway bracing 9.3.5, A.9.3.5
System subdivision 8.15.22, A.8.15.22
Test connections .... 8.17.4, Fig. A.8.17.4.1, A.8.17.4.1 to A.8.17.4.6.1
Threaded ..... *see* Threaded pipe and fittings
Underground ..... *see* Underground pipe
Unsupported lengths 9.2.3.4, A.9.2.3.4
Water-cooling towers 22.21.2.10.1
Welded ..... 6.5.2, A.6.5.2.2 to A.6.5.2.4.3
Pipe schedule systems ..... 23.5, A.23.5.1 to A.23.5.4
Definition 3.4.9
Exposure systems 11.3.2.1, A.11.3.2.1
In-rack sprinklers 16.1.8.1
Light hazard occupancies 23.5.2, A.23.5.2.6
Marine systems 26.5.1.2
Ordinary hazard occupancies 23.5.3, A.23.5.3.9
Revamping of 8.15.20.4
Risers, size of 23.5.1.4, A.23.5.1.4
Slatted floors/large floor openings/mezzanines/large platforms 23.5.1.5
Stair towers 23.5.1.6
Underground supply pipe 24.1.4
Water demand requirements 11.2.2, A.11.2.2.6
Pipe stands 9.2.6, A.9.2.6
Pipe support ..... *see also* Hangers
Marine systems ..... 26.2.5, A.26.2.5.1 to A.26.2.5.4
Risers supported by hangers 9.2.5, A.9.2.5.3, A.9.2.5.4.2
Sway bracing 9.3.5, A.9.3.5
Pits, valves in 8.16.1.1.6, 8.16.1.4, A.8.16.1.1.6, A.8.16.1.4.2
Places of worship ..... 22.30, A.22.30.1 to A.22.30.2.3
Plans and calculations ..... Chap. 23
Marine systems 26.6, A.26.6.4
Predicting expected performance from calculations B.2.1.4
Plastics
Ammonium nitrate storage ..... 22.37.1.2(2)
Classification of ..... 5.6.3.3, 5.6.3.4.1, 5.6.4, A.5.6.3.3, Table A.5.6.3.3, Table A.5.6.3.4, Table A.5.6.3, A.5.6.4, Table A.5.6.4.1
High bay records storage 20.7.1, A.20.7.1
Pallets ..... 5.6.2.2 to 5.6.2.7, A.5.6.2.2, A.5.6.2.3
Definition 3.9.1.21

Copyright 2014 National Fire Protection Association (NFPA). Licensed, by agreement, for individual use and download on October 4, 2014 to LEADER and READER for designated user PATTARAPORN SRITRAKOOL. No other reproduction or transmission in any form permitted without written permission of NFPA. For inquires or to report unauthorized use, contact licensing@nfpa.org.

Idle 12.12.2
Reinforced (definition) 3.9.1.22, A.3.9.1.22
Pipe, hangers, and fittings, CPVC ..... 6.3.7, 6.4.3, 9.3.6.1(4), A.6.3.7, A.6.4.3.1, A.6.4.3.3
Processing A.5.3.2
Retail stores, display/storage in 20.3, A.20.3
Plastics storage 12.6.7
Alternative sprinkler system designs 21.2, 21.3, A.21.2, A.21.3
Discharge criteria ..... 13.2.1(2), Table 13.2.1
Early suppression fast-response (ESFR) sprinklers ... Table 15.4.1, 17.2.3, 17.3.3, A.17.2.3, A.17.3.3
High-expansion foam systems 15.5
Motor vehicle components 20.2, A.20.2
Palletized, solid piled, bin box, or shelf storage ....15.1, Chap. 15, A.15.1.1, C.8
Rack storage ..... 16.1.2.2, Chap. 17, A.16.1.2.2
In-rack sprinklers 8.13.3.2, 17.3.3.4, A.17.3.3.4.5
Over 25 ft in height ..... 17.1.10, 17.3, A.17.3.1.3 to A.17.3.3.4.5
Up to and including 25 ft in height ..... 17.1.9, 17.2, A.17.2.1.1 to A.17.2.4.1.1, C.8, C.13, C.20, C.22
Retail stores 20.3, A.20.3
Platforms
Pipe schedules 23.5.1.5
Spaces under 8.15.6
Plenums
Sprinklers in ..... 7.10.2.1, 7.10.2.2, 7.10.5 to 7.10.7, 22.23.1.2, Fig. A.7.10.2, A.22.23.1.2.1
Unsprinklered return air space ..... 11.2.3.1.4(4)(b), 12.9.2(1), 12.9.2(2)
Plug straps, underground pipe 10.8.3.3, 10.8.3.4
Portable racks .....*see* Racks
Portable tanks, compressed gas and cryogenic fluids in 22.11
Porte-cocheres A.8.15.7
Post-indicator valves 8.16.1.1.4.1, 8.16.1.1.6, 8.16.1.3, A.8.16.1.1.6, A.8.16.1.3
Post-installed anchors 9.1.3, A.9.1.3
Definition 3.11.8, A.3.11.8
Powder-driven studs/fasteners 9.1.3.9, 9.1.4.1, 9.3.5.11.11, 9.3.7.7, A.9.1.3.9.3, A.9.1.4.1
Preaction sprinkler systems ..... 7.3, 12.4.2, 12.5, A.7.3.1 to A.7.3.3, A.12.4.2; *see also* Combined dry pipe-preaction sprinkler systems
Advanced light water reactor electric generating plants 22.27.1.6.2
Control mode specific application (CMSA) sprinklers used in 8.4.7.1, 8.4.7.2.1, 16.2.2.5, 16.3.2.5, 17.2.2.4
Cultural resource properties 22.30.1.3.5, 22.30.2.2, 22.30.2.3, A.22.30.2.2, A.22.30.2.3
Definition 3.4.10, A.3.4.10
Double interlock systems ..... 7.3.2.1(3), 7.3.2.3, 7.9.2.8.1.2, 8.17.4.4.3 to 8.17.4.4.7, 11.2.3.2.5, 22.30.1.3.5, A.7.3.2.3.1.4, A.11.2.3.2.5
Air test 25.2.2
Drainage 8.16.2.3, 8.16.2.5.2, 8.16.2.5.3, A.8.16.2.5.2.1, A.8.16.25.3.5
Fire department connections ..... 8.17.2.4.2(3)
Marine, supervision of 26.3.3
Operational tests 25.2.3.3
Palletized, solid pile, bin box, or shelf storage 14.3.5
Plastic and rubber commodities 15.3.4
Piping, protection of 8.16.4.1.1, A.8.16.4.1.1
Rack storage 16.1.5.4, 17.2.2.4
Refrigerated spaces 7.9.2.8, A.7.9.2.8.1.1
Residential sprinklers used in 8.4.5.2
Test connections 8.17.4.4
Water-cooling towers 22.21.1.1.1, 22.21.1.7.2, 22.21.2.1.3, A.22.21.1.1.1, A.22.21.1.7.2.1, A.22.21.1.7.2.2
Waterflow detecting devices 6.9.2.3
Preaction valves ..... 7.3.2.3.1, 7.9.2.6.2, 8.17.1.3.1, 8.17.1.3.2, 8.17.2.4.2(3), A.7.3.2.3.1.4
Operational tests 25.2.3.3.1
Pressure .....*see also* Air pressure; System working pressure
Fittings, pressure limits for 6.4.5, A.6.4.5
Hydraulic calculation procedure 23.4.4.9, 23.4.4.10, A.23.4.4.9
Rated pressure of components 6.1.3
Residual pressure .....*see* Residual pressure
Static pressure (definition) 3.8.1.9.2
Valves, pressure requirements 6.7.1.1
Pressure gauges 8.16.1.2.2, 8.17.3
Accessibility 8.1.2, A.8.1.2
Deluge systems 7.3.1.3
Drains .....*see* Drains
Dry pipe systems 7.2.1
Outside sprinklers 7.8.7
Preaction systems 7.3.1.3
Wet pipe systems 7.1.1
Pressure-reducing valves 8.16.1.2, 8.16.2.4.5, 25.2.4, A.8.16.1.2.3
Pressure regulating devices (definition) ..... 3.8.1.10; *see also* Pressure-reducing valves
Pressure relief valves .....*see* Relief valves
Pressure tanks 24.2.4, A.24.2.4.3
Marine systems 26.6.1, 26.7.2, 26.7.4.1, 26.7.4.5, 26.8.3.1, A.26.7.2.7
Privacy curtains .....*see* Curtains
Private fire hydrants 11.1.6.2, A.11.1.6.2
Definition 3.8.2.1.3
Private fire service mains 8.16.1.1.6, 8.16.4.3, 10.6.3, A.8.16.1.1.6, A.8.16.4.3
Definition 3.8.1.11, A.3.8.1.11
Production facilities, motion picture and television 22.19, A.22.19.4, A.22.19.5
Propylene glycol 7.6.2.2, 7.6.2.3
Proscenium curtains/openings 8.15.17.2
Protection for system components
Corrosion .....*see* Corrosion resistant piping; Corrosion-resistant sprinklers; Corrosion retardant material
Dry pipe valves 7.2.5, A.7.2.5
Earthquake damage, pipe protection from ..... 9.1.1.4, 9.3, A.9.3.1 to A.9.3.6.6
Exposure .....*see* Exposure protection systems
Freezing .....*see* Freezing, protection from
Pipe .....*see* Pipes and piping
Preaction and deluge water control valves 7.3.1.8
Protection provided by sprinkler system .....*see* System protection area
Protective coverings, sprinkler 6.2.6.4, 22.4.2.2, A.6.2.6.4.2
Public hydrants (definition) 3.8.2.1.4
Pumper outlets (definition) 3.8.1.12
Pumps 8.16.1.1.6, A.8.16.1.1.6
Fire .....*see* Fire pumps
Water supply 12.8.2, 24.2.3, A.12.8.2, A.24.2.3
Purpose of standard 1.2, A.1.2
Pyramid tire storage ..... Table 18.4(a)
Definition 3.9.4.8

-Q-

QR .....*see* Quick-response (QR) sprinklers
QREC .....*see* Quick-response extended coverage (QREC) sprinklers
QRES .....*see* Quick-response early suppression (QRES) sprinklers
Quick-opening devices 7.2.3.3, 7.2.3.4, 7.2.4, 7.3.2.3.2, 7.4.3.8, 25.2.3.2.1
Quick-response early suppression (QRES) sprinklers (definition) 3.6.4.7.1, A.3.6.4.7.1
Quick-response extended coverage (QREC) sprinklers (definition) 3.6.4.7.2
Quick-response (QR) sprinklers 8.12.5.3.4, 12.6.6, 17.3.3.4, A.3.6.1, A.17.3.3.4.5
Animal housing facilities 22.20.2.1
Apartment building dwelling units D.1.1.6.2, D.2.19.2.2
Cartoned record storage 20.5.6.3, 20.5.6.4.3
Ceiling pockets ..... 8.6.7.2(6), 8.8.7.2(6)
Cleanrooms 22.23.2.2, A.22.23.2.2
Compact storage 20.6.3

Copyright 2014 National Fire Protection Association (NFPA). Licensed, by agreement, for individual use and download on October 4, 2014 to LEADER and READER for designated user PATTARAPORN SRITRAKOOL. No other reproduction or transmission in any form permitted without written permission of NFPA. For inquires or to report unauthorized use, contact licensing@nfpa.org.

Control modes specific application (CMSA) 8.4.7.4.1
Definition 3.6.4.7, A.3.6.4.7
Extra-hazard occupancies 11.2.3.2.2.2
Guest rooms or suites D.1.1.4.2, D.2.17.2.2
In-rack ..... 12.1.3.4.4 to 12.1.3.4.6, 16.2.3.6.2, 16.3.3.5, 17.2.3.4.2
Light hazard occupancies ..... 8.3.3.1(1), 8.3.3.2, 8.3.3.4
Oxidizer solids and liquids storage ..... 22.37.1.4.3(A), 22.37.1.4.4.2(A)(3), 22.37.1.4.4.4(G)
Permitted uses 8.4.1.2
Rubber tire storage protection A.18.4
Water demand requirements 11.2.3.2.3

-R-

Racks
Definition 3.9.3.7, A.3.9.3.7
Double-row ..... 16.2.1.3.1, 16.2.1.3.2, 17.1.2.2, 17.2.1, A.16.2.1.3.1, A.16.2.1.3.2, A.17.2.1.1 to A.17.2.1.4, C.8, C.14, C.15, C.22
Alternative sprinkler system designs 21.3.1
Carton records storage ..... 20.5.3(2)
Ceiling sprinklers ..... 16.3.1.1, 17.2.1, A.16.3.1.1, A.17.2.1.1 to A.17.2.1.4, C.8, C.22, C.23
Control mode specific application (CMSA) sprinklers 16.2.2.1, 16.3.2.1, 17.2.2.1, 17.3.2.1
Definition 3.9.3.7.1, A.3.9.3.7
Early suppression fast-response (ESFR) sprinklers ..... 16.2.3.1, 16.2.4.1.2, 16.2.4.1.2(6), 16.3.3.1, 17.2.3.1, 17.3.3.1, C.20
Flue space ..... 16.1.10, 16.1.11, 16.2.4.1.2(6), 17.1.9.1, 17.1.9.2, 17.1.10.1, 17.1.10.2, C.13
In-rack sprinkler location ..... 13.3.4.2, 13.3.4.3.1, 16.2.1.4.1.1, 16.3.1.3.1.1, 17.3.1.5 to 17.3.1.7, A.16.3.1.3.1.1
In-rack sprinkler spacing 16.2.1.4.2.1, 16.2.1.4.2.5, 16.3.1.3.2.2, A.16.2.1.4.2.1, A.16.2.1.4.2.5
Oxidizer solids and liquids storage ..... 22.37.1.4.4.4(C)
Plastics display/storage, retail stores 20.3.1
Solid rack 16.1.6, 17.1.5.1, 17.1.5.2, C.11
Movable 16.1.3, 17.1.3
Definition 3.9.3.7.2, A.3.9.3.7
Multiple-row ..... 16.2.1.3.1, 16.2.1.3.3, 17.1.2.3, 17.2.1, A.16.2.1.3.1, A.17.2.1.1 to A.17.2.1.4, C.8, C.14, C.22
Alternative sprinkler system designs 21.3.1
Ceiling sprinklers ..... 16.3.1.2, 17.2.1, A.17.2.1.1 to A.17.2.1.4, C.8, C.22
Control mode specific application (CMSA) sprinklers 16.2.2.1, 16.3.2.1, 17.2.2.1, 17.3.2.1
Definition 3.9.3.7.3, A.3.9.3.7
Early suppression fast-response (ESFR) sprinklers 16.2.3.1, 16.3.3.1, 17.2.3.1, 17.3.3.1
Flue space 16.1.10, 16.1.11, 17.1.9.1, 17.1.9.2, 17.1.10.1.1, 17.1.10.2, C.13
In-rack sprinkler location 16.2.1.4.1.2, 16.2.1.4.1.3, 16.3.1.3.1.3, 17.3.1.8, A.16.3.1.3.1.3
In-rack sprinkler spacing 16.2.1.4.2.2, 16.2.1.4.2.6, 16.3.1.3.2.3, A.16.2.1.4.2.2
Solid rack 16.1.6, 17.1.5.1, 17.1.5.2, C.11
Portable .....*see also* Automotive components on portable racks
Ceiling sprinkler water demand 16.2.1.3.2, 16.2.1.3.3, A.16.2.1.3.2, C.15
Definition 3.9.3.7.4
Tire storage ..... Table 18.4(a), Table 18.4(c), Table 18.4(d)
Single-row ..... 16.2.1.3.1, 16.2.1.3.2, 17.1.2.2, 17.2.1, A.16.2.1.3.1, A.16.2.1.3.2, A.17.2.1.1 to A.17.2.1.4, C.8, C.14, C.15, C.22
Alternative sprinkler system designs 21.3.1
Carton records storage ..... 20.5.3(1)
Ceiling sprinklers ..... 16.3.1.1, 17.2.1, A.16.3.1.1, A.17.2.1.1 to A.17.2.1.4, C.8, C.22, C.23
Control mode specific application (CMSA) sprinklers 16.2.2.1, 16.3.2.1, 17.2.2.1, 17.3.2.1
Definition 3.9.3.7.5
Early suppression fast-response (ESFR) sprinklers 16.2.3.1, 16.2.4.1.2, 16.3.3.1, 17.2.3.1, 17.3.3.1, C.20
Flue space 16.1.11, 17.1.9.2, 17.1.10.1.1, 17.1.10.2
In-rack sprinkler location 13.3.4.2, 13.3.4.3.1, 16.2.1.4.1.1, 16.3.1.3.1.2, 17.3.1.4, 17.3.1.7, A.16.3.1.3.1.2
In-rack sprinkler spacing 16.2.1.4.2.1, 16.2.1.4.2.5, A.16.2.1.4.2.1, A.16.2.1.4.2.5
Oxidizer solids and liquids storage ..... 22.37.1.4.4.4(D)
Plastics display/storage, retail stores 20.3.1
Solid rack 16.1.6, 17.1.5.1, 17.1.5.2, C.11
Rack shelf area (definition) 3.9.3.7.6
Rack storage .... 12.6.2, 12.6.3, Chap. 16, Annex C; *see also* Automotive components on portable racks
Alternative sprinkler system designs 21.3, A.21.3
Boat storage ..... Table A.5.6
Carton records storage 20.5.3
Definitions 3.9.3
High-expansion foam systems 16.1.5, 16.3.4.1
Miscellaneous storage 13.3
Oxidizer solids and liquids storage ..... Table 22.37.1.4.1, 22.37.1.4.3, 22.37.1.4.4.2(A), 22.37.1.4.4.4
Pallets, idle 12.12.3
Plastics commodities ..... Chap. 17
Retail display/storage 20.3, A.20.3
Protection criteria-general .. 16.1, A.16.1.2 to A.16.1.9, C.9 to C.13
Refrigerated spaces 7.9.2.8.3, 7.9.2.8.4
Sprinkler piping installed in 9.2.1.2
Steel columns, fire protection of 16.1.4, C.10
Storage over 25 ft in height ..... 17.1.10, 17.3, A.17.3.1.3 to A.17.3.3.4.5
Flue space 16.1.11
High-expansion foam systems 16.3.4.1
Plastics storage ..... 17.3, A.17.3.1.3 to A.17.3.3.4.5
Special design for 16.3.4
Storage up to and including 25 ft in height ..... 16.2, 17.1.9, 17.2, A.16.2.1.3.1 to A.16.2.4.1.1, A.17.2.1.1 to A.17.2.4.1.1, C.8, C.13 to C.20, C.22
Flue space 16.1.10, C.13
Plastics storage .... 17.2, A.17.2.1.1 to A.17.2.4.1.1, C.8, C.20, C.22
Tires ..... Table 18.4(a) to (d), 18.5
Rack storage sprinklers ..... 8.5.5.3.3, 8.6.5.3.5, 8.8.5.3.4, 8.12.5.3.3, 8.13.3.1, A.8.5.5.3.3, C.3; *see also* In-rack sprinklers
Definition 3.6.3.4
Discharge criteria ..... Table 13.2.1, 16.3.1.3.3.1, 16.3.2.7.8, 17.2.1.5.7, 17.2.2.6.8, 17.2.3.4.9, 17.3.1.14, C.19
Hose connections ..... 8.17.5.1.3(5)
Temperature rating 8.3.2.7, A.8.3.2.7
Rated capacity (definition) 3.8.1.13
Raw water source (definition) 3.3.19, A.3.3.19
Recessed sprinklers (definition) 3.6.2.4
Reconditioned system components and hardware 6.1.2
Records
Carton records storage 20.5, C.25
Definition 3.9.1.3, A.3.9.1.3
High-bay records storage 20.7, A.20.7.1
Pipe welding 6.5.2.6
Storage 8.15.10, A.8.15.10
Reducers 6.4.7
References ..... Chap. 2, Annex F
Refrigerated spaces ..... 7.9, 8.3.2.5(10), 8.16.2.3.3, A.7.9
Releasing devices
Deluge systems 7.3.1.6
Preaction systems 7.3.1.6
Relief valves 7.1.2, 7.2.6.5, 8.16.1.2.3, A.8.16.1.2.3
Marine systems 26.3.1, A.26.3.1
Pressure tanks (marine systems) 26.7.2.3
Remote area of application 14.2.2, 16.2.1.1, B.2.1.3
Residential board and care occupancies D.1.1.8, D.2.22

Copyright 2014 National Fire Protection Association (NFPA). Licensed, by agreement, for individual use and download on October 4, 2014 to LEADER and READER for designated user PATTARAPORN SRITRAKOOL. No other reproduction or transmission in any form permitted without written permission of NFPA. For inquires or to report unauthorized use, contact licensing@nfpa.org.

Residential sprinklers ..... 6.2.3.4, 6.2.4.1, 8.4.5, 8.10, 11.3.1, A.8.4.5.1, A.8.10.2 to A.8.10.7.3, A.11.3.1.1 to A.11.3.1.2.1
Apartment building dwelling units D.1.1.6.2, D.2.19.2.2
Definition 3.6.4.8
Existing systems, modifications or additions to 11.3.1.4
Guest rooms or suites D.1.1.4.2, D.2.17.2.2
Light hazard occupancies ..... 8.3.3.1(2), 8.3.3.4
Marine systems 6.4.2
Obstructions to discharge ..... 8.10.5 to 8.10.7, A.8.10.6.2.1.3 to A.10.7.3
Residual hydrants (definition) 3.8.2.1.5
Residual pressure 11.2.2.6, A.11.2.2.6
Definition 3.8.1.9.1
Response Time Index (RTI) 3.6.1, A.3.6.1
Restraint straps for tees, underground 10.8.3.2, 10.8.3.4
Retail stores, plastics storage/display in 20.3, A.20.3
Retarding devices 8.17.1.2
Retroactivity of standard 1.4
Return bends 8.15.19, 26.4.8
Ridge pole sprinklers 7.8.8.6.1
Riser nipples (definition) 3.5.8
Risers
Building service chutes 11.2.3.4.1
Combined sprinkler and standpipe, control valves for ..... 8.17.5.2.2(3)
Definition 3.5.9
Drain 8.16.2.4.7
Earthquake damage, protection from ..... 9.3.2.3.1(1), 9.3.2.3.1(6), 9.3.5.8, A.9.3.2.3.1(1), A.9.3.5.8.1
Hose connections ..... 8.17.5.1.3(3), 8.17.5.2.1, 8.17.5.2.2(3)
Outside refrigerated spaces 7.9.2.5, 7.9.2.6, A.7.9.2.5, A.7.9.2.6
Protection of 8.16.4.1.3, 8.16.5, 10.6.4, A.10.6.4
Quick-opening device connections 7.2.4.3, 7.2.4.4
Size 23.5.1.4, A.23.5.1.4
Support of 9.2.5, A.9.2.5.3, A.9.2.5.4.2
Sway bracing 9.3.5.8, A.9.3.5.8.1
System ..... 7.9.2.6, 8.2.1, Fig. A.3.5, A.7.9.2.6, A.8.2.1
Definition 3.5.12
Drain connections 8.16.2.4.2
Fire department connections 8.17.5.2.1
Protection against freezing 8.16.4.1.3
Storage, requirements for 12.8.3
System subdivision 8.15.22, A.8.15.22
Rivers, water supply connections from 24.2.6
Rods ..... 9.1.2, 9.3.5.5.10, 9.3.6.5, A.9.1.2.3(1), A.9.3.5.5.10
Coach screw 9.1.5.7
Eye 9.1.2.5
Threaded sections of 9.1.2.6
Underground 10.8.3.1.2, 10.8.3.3.3, 10.8.3.4, 10.8.3.5, A.10.8.3.5
Roll paper storage ..... 12.6.2, 12.6.3, Chap. 19, Table A.5.6.3.3, Table A.5.6.3.4
Commodity classifications 5.6.5, A.5.6.5
Definitions 3.9.5
Discharge criteria ..... 13.2.1(4), Table 13.2.1
Height (definition) 3.9.5.7, A.3.9.5.7
Horizontal 19.1.1.5
Definition 3.9.5.6.1
Hose stream demand and water supply system ... 19.1.1.1 to 19.1.1.2
Protection criteria 19.1.2, A.19.1.2
Temperature rating of sprinklers 8.3.2.7, A.8.3.2.7
Vertical (definition) 3.9.5.6.2
Wrapped 19.1.1.6, 19.1.1.7
Definition 3.9.5.6.3, A.3.9.5.6.3
Roof ..... *see also* Concealed spaces
Common 8.2.4
Exterior 7.8.8.6
Height (definition) 3.9.1.23
Peak, sprinklers at or near 8.6.4.1.3, 8.8.4.1.3, A.8.6.4.1.3.2, A.8.6.4.1.3.3, A.8.8.4.1.3
Uninsulated, sprinklers under ..... 8.3.2.5(5)
Vents 12.1.1, A.12.1.1.1, A.12.1.1.3, C.6
Room design method ..... *see* Design, sprinkler system
Rooming houses D.1.1.3, D.2.16
Rooms, small 8.6.3.2.4, A.8.6.3.2.4
Definition 3.3.21
Rubber
Classification of ..... 5.6.4, A.5.6.4, Table A.5.6.4.1
Palletized, solid pile, bin box, or shelf storage ..... Chap. 15
Tires ..... *see* Tires, rubber

-S-

Scope of standard 1.1, A.1.1
Screws 9.1.5.1, 9.1.5.3, 9.2.5.2
Sectional valves 8.16.2.4.3
Seismic damage, pipe protection from ..... 9.1.1.4, 9.3, A.9.3.1 to A.9.3.6.6, Annex E
Seismic separation assembly 9.3.3, A.9.3.3
Definition 3.11.10, A.3.11.10
Semi-mill construction (definition) A.3.7.1
Shafts, vertical ..... *see* Vertical shafts
Shall (definition) 3.2.4
Shelf storage ..... *see also* Slatted racks; Solid shelving
Alternative sprinkler system designs 21.2, A.21.2
Back-to-back shelf storage ..... 15.2.2(3), 21.2, A.21.2
Definition 3.9.2.6.1
Definition 3.9.2.6, A.3.9.2.6
Discharge criteria ..... Table 13.2.1
Pallets, idle 12.12.3
Plastic and rubber commodities ..... Chap. 15
Protection of Class I to IV commodities ..... Chap. 14
Rack storage 16.2.4.1, A.16.2.4.1.1, C.20
Special design for 14.5
Sprinkler system design approach, shelves above 12 ft 14.2.4
Shields
Electrical equipment protection 8.15.11.2
Sprinkler 8.13.3.1, 8.13.3.2, C.3
Shop-welded
Definition 3.3.20
Piping 6.5.2.2.1
Should (definition) 3.2.5
Show windows, sprinklers under ..... 8.3.2.5(6)
Sidewall sprinklers ..... 8.7, A.8.7.4.1.2.1 to A.8.7.5.3
Clearance to storage 8.7.6, A.8.7.6
Combined dry pipe-preaction systems ..... 7.4.2.4(3), 7.4.2.4(4)
Definition 3.6.2.5
Deflector position ..... 8.7.4, 8.9.4, 8.10.4.2, A.8.7.4.1.2.1 to A.8.7.4.1.3.3, Fig. A.8.7.4.1.3.2, Fig. A.8.7.4.1.3.3, A.8.9.4.1.2.1 to A.8.9.4.1.4, A.8.9.4.1.3.1, Fig. A.8.9.4.1.3.1, Fig. A.8.9.4.1.3.2, A.8.9.4.1.4
Dry pipe systems ..... 7.2.2(3) to 7.2.2(5)
Elevator hoistways 8.15.5.1, 8.15.5.5, A.8.15.5.1, A.8.15.5.5
Extended coverage ..... 8.4.3(5), 8.9, A.8.9
Hanger assembly for 9.2.3.6, A.9.2.3.6
Light hazard occupancies ..... 8.4.2(1)
Obstructions to discharge ..... 8.7.5, 8.9.5, 8.10.7, A.8.7.5.1.6 to A.8.7.5.3, A.8.9.5.1.6 to A.8.9.5.3, A.8.10.7.1.5 to A.8.10.7.3
Outside sprinklers 7.8.8.6
Plastic pallets, protection of ..... 12.12.2.4.1(5)
Preaction systems ..... 7.3.2.5(3) to 7.3.2.5(5)
Protection areas 8.7.2, 8.9.2, A.8.9.2.1
Residential ..... 8.10.3.4, 8.10.4.2 to 8.10.4.4
Spacing 8.7.3, 8.9.3
Steel columns, fire protection of ..... 16.1.4.1(1), 17.1.4.1(2)
Tire storage 18.2.1
Signs ..... *See also* Identification
Caution
Sprinklers 7.7.1.5
Valves 7.7.1.5
General information 25.6, A.25.6

Copyright 2014 National Fire Protection Association (NFPA). Licensed, by agreement, for individual use and download on October 4, 2014 to LEADER and READER for designated user PATTARAPORN SRITRAKOOL. No other reproduction or transmission in any form permitted without written permission of NFPA. For inquires or to report unauthorized use, contact licensing@nfpa.org.

Hydraulic design information 25.5, A.25.5
Location and information A.6.10
SI units 1.6.1
Skylights 8.5.7
Slatted floors 23.5.1.5
Slatted racks 16.2.4.1, 17.2.4.1, A.16.2.4.1.1, A.17.2.4.1.1, C.20
Definition 3.9.3.7.8
Plastics display/storage, retail stores 20.3.1
Slave pallets 16.2.1.3.4.7
Definition 3.9.1.24
Sloped ceiling ..... *see* Ceilings
Small hose ..... *see* Hose
Small rooms 8.6.3.2.4, A.8.6.3.2.4
Definition 3.3.21
Smooth ceilings ..... *see* Ceilings
Soffits ..... 8.7.4.1.3, 8.9.4.1.3, 8.9.4.1.4, 8.10.4.3, 8.10.7.1.5, 8.15.1.2.18, A.8.7.1.3.2, A.8.9.4.1.3.1 to A.8.9.4.1.4, A.8.10.7.1.5
Soldered joints 6.5.4, A.6.5.4
Solid-piled storage
Alternative sprinkler system designs 21.2, A.21.2
Definition 3.9.2.7
Early suppression fast-response (ESFR) sprinklers 14.4
Hose stream demand and water supply duration 14.3.4
Plastic and rubber commodities ..... Chap. 15
Protection of Class I to IV commodities ..... Chap. 14
Special design for 14.5
Solid shelf racks 16.1.6, 17.1.5, C.11
Definition 3.9.3.7.9
Solid shelving 16.1.6, 17.1.5, C.11
Definition 3.9.3.8, A.3.9.3.7
Early suppression fast-response (ESFR) sprinklers ..... 8.4.6.1.1, 16.2.3.2, 16.3.3.2, 17.2.3.1.1(1), 17.3.3.1.1
High bay records storage 20.7.3
Plastics display/storage, retail stores ..... 20.3.1, 20.3.4(5), 20.3.5(4), 20.3.5(5), 20.3.6
Solid unit load of nonexpanded plastic ..... Fig. 15.2.2
Definition 3.9.2.8
Solvent extraction facilities ..... 22.5, 22.36.1.3, A.22.5.1, A.22.36.1.3.2 to A.22.36.1.3.4
Soundstages 22.19, A.22.19.4, A.22.19.5
Spaces ..... *see* Concealed spaces
Spare detection devices, stock of 26.3.2
Spare sprinklers, stock of ..... 6.2.9, 26.2.3, A.6.2.9.1 to A.6.2.9.7.1
Special occupancy hazards ..... 8.4.4.1, 11.2.1.4(4)
Special occupancy requirements ..... Chap. 22
Special situations ..... 8.15, A.8.15.1.2 to A.8.15.23.3
Concealed spaces ..... 8.15.1, A.8.15.1.2 to A.8.15.1.2.17
Drop-out ceilings 8.15.15, A.8.15.5, A.8.15.15.4
Dry pipe underground 8.15.21
Ducts 8.15.13
Dwelling units 8.15.8, A.8.15.2, A.8.15.8.1.1
Electrical equipment 8.15.11
Exterior projections 8.15.7, A.8.15.7
Ground floors/exterior docks/platforms, spaces under 8.15.6
Hospital clothes closets 8.15.9, A.8.15.9
Library stack areas 8.15.10, A.8.15.10
Old-style sprinklers ..... 8.15.14(1), 8.15.16, A.8.15.16.2
Open-grid ceilings 8.15.14, A.8.15.14
Piping to sprinklers below ceilings ..... 8.15.20, A.8.15.20.1 to A.8.15.20.5.2
Records storage 8.15.10, A.8.15.10
Return bends 8.15.19
Spaces above ceilings 8.15.23, A.8.15.23.3
Stages 8.15.17
Stair towers 8.15.18
Stairways 8.15.3, 8.15.4, A.8.15.3.3, A.8.15.4
System subdivision 8.15.22, A.8.15.22
Vertical shafts 8.15.2, 8.15.4, A.8.15.2.2, A.8.15.4
Special sprinklers 6.2.4.2, 8.4.8, 8.5.6.3, A.8.4.8.1
Definition 3.6.4.9
Special structures D.1.1.2, D.2.2
Spray application areas, protection of ..... 6.2.6.4, 22.4, A.6.2.6.4.2, A.22.4.1.1 to A.22.4.2.1
Spray nozzles
Cooking equipment protection ..... 7.10, A.7.10.2, Fig. A.7.10.2
Stationary combustion engines and gas turbines protection 22.6.2.3
Spray sprinklers ..... 11.2.3.2.4(1), 12.1.3.4.2, 12.6.2, 12.6.3, 12.12.2.4, 16.2.4.1.2(1), 17.2.4.1.2(1), 20.6.3
Definition 3.6.4.10
Roof protection use 7.8.8.6
Sprig 9.2.3.5.1, 9.2.3.7
Definition 3.5.10
Restraint of 9.3.6.6, A.9.3.6.6
Sprinkler alarms ..... 8.17.1, A.8.17.1, C.4; *see also* Waterflow alarms/detection devices
Sprinklers ..... *see also* Control mode specific application (CMSA) sprinklers; Dry sprinklers; Early suppression fast-response (ESFR) sprinklers; In-rack sprinklers; Old-style/conventional sprinklers; Outside sprinklers; Pendent sprinklers; Residential sprinklers; Sidewall sprinklers; Temperature ratings of sprinklers; Upright sprinklers; Specific application control mode sprinkler (storage use)
Application of types 8.4, A.8.4
Characteristics, general 3.6.1, A.3.6.1
Clearance to storage ..... *see* Clearance
Cornice 7.8.8.5
Corrosion-resistant ..... *see* Corrosion-resistant sprinklers
Definitions 3.6
Discharge characteristics ..... 6.2.3, Table A.6.2.3.1
Face 16.1.11.2.1, 17.1.10.2.1
Definition 3.9.3.4
Hydraulic calculations 23.4.4.6, A.23.4.4.6
Identification 6.2.2, 6.2.3.1, A.6.2.2, A.6.2.3.1
Limitations 6.2.4
Location .. 8.1.1, 8.5 to 8.12, 13.3.4, A.8.1.1, A.8.5.5.1 to A.8.12.5.2
New sprinkler requirement 6.2.1
Open 8.4.4
Outside 7.8, A.7.8.4.2.1, A.7.8.4.2.3
Painting 6.2.6.2, 6.2.6.4.3, A.6.2.6.2
Piping to, below ceilings ..... 8.15.20, A.8.15.20.1 to A.8.15.20.5.2
Positioning ..... 8.1.1, 8.5 to 8.12, A.8.1.1, A.8.5.5.1 to A.8.12.5.2
Protection area per sprinkler 8.5.2, 8.6.2, 8.7.2, 8.8.2, 8.9.2, 8.11.2, 8.12.2, A.8.6.2.2.1, A.8.8.2.1, A.8.8.2.2.1, A.8.9.2.1, A.8.11.2, A.8.12.2.2.3
Protective caps and straps, removal of 8.3.1.5, A.8.3.1.5.1, A.8.3.1.5.2
Reconditioned 6.1.2.2
Spacing ..... 8.1.1, 8.5.3, 8.6.3, 8.7.3, 8.8.3, 8.9.3, 8.10.3, 8.11.3, 8.12.3, A.8.1.1, A.8.6.3.2.3, A.8.6.3.2.4, A.8.11.3.1, Fig. A.8.12.2.2.3, A.8.12.3.1(3)
Spare, stock of ..... 6.2.9, 26.2.3, A.6.2.9.1 to A.6.2.9.7.1
Temperature ratings ..... 8.3.2, A.8.3.2.1 to A.8.3.2.7
Thermal sensitivity ..... *see* Thermal sensitivity
Use of ..... 8.3, 8.5, A.8.3.1.1 to A.8.3.3.1, A.8.5.4.1 to A.8.5.6.1
Sprinkler systems ..... *see also* Antifreeze systems; Combined dry pipe-preaction sprinkler systems; Deluge sprinkler systems; Dry pipe sprinkler systems; Hydraulically designed systems; Marine systems; Pipe schedule systems; Preaction sprinkler systems; System protection area; Valves; Wet pipe sprinkler systems
Acceptance ..... Chap. 25
Components and hardware ... Chap. 6, 26.2, A.26.2.1 to A.26.2.7.7
Nonsprinkler system components, support of 4.6, A.4.6
Protection for ..... *see* Protection for system components
Reconditioned components 6.1.2
Definition 3.3.22, A.3.3.22
Design ..... *see* Design, sprinkler system
Future upgrading of performance B.2.1.5
Installation ..... Chap. 8
Limited area 4.2
Maintenance ..... 26.9, Chap. 27

Copyright 2014 National Fire Protection Association (NFPA). Licensed, by agreement, for individual use and download on October 4, 2014 to LEADER and READER for designated user PATTARAPORN SRITRAKOOL. No other reproduction or transmission in any form permitted without written permission of NFPA. For inquires or to report unauthorized use, contact licensing@nfpa.org.

Nonfire protection connections to 7.7, A.7.7.1.2
Working plans 23.1.5, A.23.1.5
Partial systems 26.1.5, A.26.1.5
Performance criteria B.2
Protection, level of 4.1
Requirements ..... Chap. 7
Size of 7.2.3, 7.3.2.2, 8.13.1, A.7.2.3
Subdivision 8.15.22, A.8.15.22
Working pressure 6.1.3
S_s 9.3.5.9.3.1, 9.3.5.9.3.2, A.9.3.5.9.3.2
Definition 3.11.9
Stable piles ..... Fig. 15.2.2, Fig. 17.1.2.1
Definition 3.9.2.4, A.3.9.2.4
Stages (theatrical) 8.15.17
Stairways 8.10.6.3.2, 8.10.7.3.2, 8.15.3, 8.15.4, A.8.15.3.3, A.8.15.4, D.2.3.1.1, D.2.4.1.1
Marine systems 26.4.5.2
Stair towers 8.15.18, 23.5.1.6
Type 1 (definition) ..... 3.10.13, 26.1.3(12)
Standard (definition) 3.2.6
Standard mill construction (definition) A.3.7.2
Standard spray sprinklers ..... 8.6, 8.7, A.8.6.2.2.1 to A.8.6.7.2(4), A.8.7.4.1.2.1 to A.8.7.5.3
Definition 3.6.4.10.1
Standby emergency generators 22.27.1.7, 22.29.1.4
Standpipe systems ... 8.17.5.2.2, 22.27.2.1, A.8.17.5.2.2, A.22.27.2.1.2
Static pressure (definition) 3.8.1.9.2
Stationary combustion engines and gas turbines 22.6, A.22.6.1
Stationary containers, cylinders, and tanks, compressed gas and cryogenic fluids in 22.11
Steel
Building, control mode specific application (CMSA) sprinkler protection 14.3.6, 15.3.5, 16.2.2.6, 16.3.2.6, 17.2.2.5, 17.3.2.4
Columns 16.1.4, 17.1.4, 18.2, C.10
Fittings 6.5.1.2, A.6.5.1.2
Hanger fasteners in 9.1.4, A.9.1.4.1
High bay records storage, shelves for 20.7.3
Pipe ..... 6.3.2 to 6.3.4, 6.4.3.1, 8.16.4.2.4, 9.2.3.4.1, 9.2.3.5.1, 9.2.3.5.2.1, 9.2.4.3 to 9.2.4.5, 22.30.2.3, A.6.3.2, A.6.4.3.1, A.22.30.2.3
Galvanized 8.4.7.2, A.8.4.7.2
Underground ..... Table 10.1.1, 10.1.2, 10.1.3, 10.1.6.2
Retail shelving racks, plastics display/storage 20.3.3
Storage ..... 8.2.1(4), 8.2.3; *see also* Baled cotton; Bin box storage; High-piled storage; Miscellaneous storage; Palletized storage; Plastics storage; Rack storage; Roll paper storage; Shelf storage; Solid-piled storage; Tires
Ammonium nitrate solids and liquids 22.37.1.2
Building height 12.1.3, A.12.1.3
Cellulose nitrate motion picture film ..... 22.7, A.22.7.1.3 to A.22.7.1.10
Clearance to ..... *see* Clearance
Definitions ..... 3.9, A.3.9.1 to A.3.9.6.2
Discharge considerations, sprinkler 12.7, A.12.7.2
Draft curtains, use of 12.1.1, A.12.1.1.1, A.12.1.1.3, C.6
Excessive clearances 12.1.3.4, A.12.1.3.4.1
General requirements ..... Chap. 12
Hazardous Materials Code 22.37
Idle pallets ..... *see* Pallets
Library stack areas 8.15.10, A.8.15.10
Organic peroxide formulations 22.37.1.3
Oxidizer solids and liquids, indoor storage of 22.37.1.4
Records storage 8.15.10, A.8.15.10
Roof vents, use of 12.1.1, A.12.1.1.1, A.12.1.1.3, C.6
Special designs Chap.20
Temperature rating of sprinklers 8.3.2.7, 8.4.7.3.3, 8.4.7.3.4, A.8.3.2.7
Storage aids (definition) 3.9.1.25
Strainers ... 7.8.6, 7.10.10, 8.3.4.2(3), 8.15.13.4, 8.17.1.5.1, 8.17.1.5.2
Summary sheet, hydraulic calculations 23.3.2, A.23.3.2
Supervision
Alarm service 11.2.2.5
Definition ..... 3.10.11, 26.1.3(10)
Deluge systems 7.3.3.1
High-rise buildings D.1.1.2.1, D.2.2.1.1
Marine system piping 26.3.3
Preaction systems 7.3.2.4, 26.3.3, A.7.3.2.4
Supervisory devices 8.16.1.1.2, A.8.16.1.1.2
Definition 3.5.11
Survival angle (definition) ..... 3.10.12, 26.1.3(11)
Sway braces ..... 9.3.5, A.9.3.5, Annex E
Definition 3.11.11
System protection area ..... *see also* Density/area method
Geometry of area of application B.2.1.3
Level of protection 4.1
Limitations 8.2, A.8.2.1, A.8.2.5
Maximum protection area of coverage 8.5.2.2, 8.6.2.2, 8.7.2.2, 8.8.2.2, 8.9.2.2, 8.11.2.2, 8.12.2.2, A.8.6.2.2.1, A.8.8.2.2.1, A.8.12.2.2.3
Protection area per sprinkler 8.5.2, 8.6.2, 8.7.2, 8.8.2, 8.9.2, 8.11.2, 8.12.2, A.8.6.2.2.1, A.8.8.2.1, A.8.8.2.2.1, A.8.9.2.1, A.8.11.2, A.8.12.2.2.3
Selection of area of application B.2.1.2
System risers ..... *see* Risers
System working pressure 6.1.3
Definition 3.3.23
Underground pipe 10.1.5, 10.2.3, 10.10.2.2.1, A.10.1.5, A.10.10.2.2.1

-T-

Tanks ..... *see also* Gravity tanks; Pressure tanks
Compressed gases and cryogenic fluids 22.11
Hose demand and 12.8.1, A.12.8.1
Technology, new 1.7
Telecommunications facilities 22.32
Television studio soundstages and production facilities 22.19, A.22.19.4, A.22.19.5
Temperature characteristics 6.2.5, A.6.2.5
Temperature ratings of sprinklers ..... 8.3.2, A.8.3.2.1 to A.8.3.2.7; *see also* High temperature-rated sprinklers; Intermediate temperature-rated sprinklers; Ordinary temperature-rated sprinklers
Control mode specific application (CMSA) sprinklers 8.4.7.3
Early suppression fast-response (ESFR) sprinklers 8.4.6.5
In-rack sprinklers 8.13.2.2
Marine systems 26.4.1
Special sprinklers ..... 8.4.8.2(2)
Terminals
Airport 22.25, A.22.25.1.2, A.22.25.1.3
Marine ..... 22.22, A.22.22.1.1 to A.22.22.2.1.2.1(B)(5)
Test blanks 25.2.1.14, A.25.2.1.14
Test connections ..... 7.2.3.7, 7.4.6, 7.10.11, 8.17.4, A.7.2.3.7, Fig. A.8.17.4.1, A.8.17.4.1 to A.8.17.4.6.1
Deluge systems 8.17.4.5
Dry pipe systems ..... 8.17.4.3, A.8.17.4.3, Fig. A.8.17.4.3
Main drain ..... 8.16.2.4.6, 8.17.4.1, A.8.17.4.1, Fig. A.8.17.4.1
Marine systems 26.4.13
Preaction systems 8.17.4.4
Wet pipe systems 8.17.4.2, A.8.17.4.2
Tests ..... 8.1.2, Chap. 27, A.8.1.2
Apparatus/devices for 7.3.1.7
Combined dry pipe-preaction systems 7.4.6
Deluge systems 7.3.1.7
Dry pipe and double-interlocked system air 25.2.2
Ducts, sprinklers in 8.15.13.3
Flow 26.8.3.1
Definition 3.8.1.14.1
Flushing 10.10.2.1, A.10.10.2.1
Definition 3.8.1.14.2
Hydrostatic 25.2.1, 26.8.1, A.25.2.1
Definition 3.8.1.14.3

Copyright 2014 National Fire Protection Association (NFPA). Licensed, by agreement, for individual use and download on October 4, 2014 to LEADER and READER for designated user PATTARAPORN SRITRAKOOL. No other reproduction or transmission in any form permitted without written permission of NFPA. For inquires or to report unauthorized use, contact licensing@nfpa.org.

Main drain valve 25.2.3.4, A.25.2.3.4.2
Marine systems 26.8, 26.9
Preaction systems 7.3.1.7
System operational ..... 25.2.3, 26.8.3, A.25.2.3.2 to A.25.2.3.4.2
Tissue test series A.19.1
Water disposal after 25.2.1.13
Test valves 6.7.3, 26.2.6.2, 26.7.3.11
Thermal barriers
Definition 3.3.24
Marine A.26.2.2
Definition ..... 3.10.9, 26.1.3(9), A.26.1.3(9)
Residential board and care occupancies D.1.1.8.2, D.2.22.2.2
Thermal sensitivity ..... 3.6.1, 8.3.3, 8.4.8.1(4), A.8.3.3.1; *see also* Temperature ratings of sprinklers
Definition A.3.6.1
Threaded pipe and fittings 6.5.1, 10.3.1, 10.8.1.2, A.6.5.1.2
Thrust blocks 10.8.2, A.10.8.2
Time limitation, combined dry pipe-preaction systems 7.4.5
Tires, rubber
Banded (definition) 3.9.4.1
Definition 3.9.4.10
Storage ..... 12.6.2, 12.6.3, Chap. 18
Ceiling systems 18.4, A.18.4
Definitions 3.9.4
Discharge criteria ..... 13.2.1(3), Table 13.2.1
In-rack systems 18.2.3, 18.5
Miscellaneous ..... *see* Miscellaneous storage
Rack illustrations 3.9.4.9, A.3.9.4.9
Sprinklers, clearance for 8.5.6.5
Temperature rating of sprinklers 8.3.2.7, A.8.3.2.7
Tissue paper ..... 5.6.5.4, 19.1.1.7, 19.1.2.1.2, A.5.6.5, Table A.5.6.5, A.19.1
Towers
Stair 8.15.18, 23.5.1.6
Water-cooling ..... *See* Water-cooling towers
Transverse flue spaces ..... 13.3.4.3, 13.3.4.4, 16.1.10.2, 16.1.11.1, 16.2.1.4.2.3, 16.3.1.3.2.4, 16.3.2.7.3, 16.3.2.7.5, 16.3.2.7.6, 17.1.7.4, 17.1.9.2, 17.1.10.1.1, 17.1.10.2.2, 17.2.1.4, 17.2.1.5.3 to 17.2.1.5.5, 17.2.2.6.3, 17.2.2.6.5, 17.2.2.6.6, 17.2.3.4.5 to 17.2.3.4.7, 17.3.1.10 to 17.3.1.12, 17.3.3.4.5 to 17.3.3.4.7, A.16.2.1.4.2.3, A.16.3.1.3.2.4, A.17.1.7.4, A.17.2.1.4, A.17.2.1.5.3, A.17.2.2.6.3, A.17.2.3.4.5, A.17.3.1.10, A.17.3.3.4.5
Carton records storage 20.5.2, 20.5.6.3.4, 20.5.6.4
Control mode specific application (CMSA) 16.2.2.7.3, 16.2.2.7.5, 16.2.2.7.6, A.16.2.2.7.3
Definition 3.9.3.9
Early suppression fast-response (ESFR) sprinklers ... 16.2.4.1.2(5), 16.3.3.5.2, 17.3.3.4.2, 17.4.1.2(5)
High bay records storage 20.7.3
Oxidizer solids and liquids storage ..... 22.37.1.4.3(C)
Plastics display/storage, retail stores ..... 20.3.1(11)
Trapeze hangers 9.1.1.7, 9.2.1.3.2, 9.2.4.6, A.9.1.1.7
Tripping devices, combined systems 7.4.3.3, 7.4.3.4
Trusses
Combustible concealed spaces 8.6.4.1.4, 11.3.4
Open 8.12.5.1.1, 8.12.5.3.2
Wood truss construction (definition) A.3.7.2
Tube ..... *see* Pipes and piping
Turbine-generators ... 22.27.1.5 to 22.27.1.7, A.22.27.1.5, A.22.27.1.6
Turbines
Standby combustion 22.27.1.7
Stationary gas, installation and use of 22.6, A.22.6.1
Type 1 stair (definition) ..... 3.10.13, 26.1.3(12)

-U-

U-hooks .... 9.1.2.4, 9.1.5.2, 9.3.5.5.11, 9.3.6.1(2), 26.2.5.4, A.26.2.5.4
Underground pipe ..... 6.3.1.1.1, 8.16.2.6.3, Chap. 10, 24.1.4, 24.1.6, Fig. A.3.5, A.6.3.1.1.1, A.24.1.6.2
Backfilling 10.9
Buried fittings 10.2.5, A.10.2.5
Care in laying 10.7
Contractor's material and test certificate ..... Fig. 10.10.1
Cover, depth of 10.4, A.10.4.1
Damage, protection against ..... 10.6, A.10.6.4 to A.10.6.8.1
Dry pipe 8.15.21
Fire department connections 8.17.2.4.4, 10.1.3, A.8.17.2.4.4
Fittings ..... *see* Fittings
Freezing, protection from 10.5, A.10.5.1
Joints ..... *see* Joints
Lining of 10.1.6, A.10.1.6
Listed 10.1.1, A.10.1.1
Loop systems A.10.1
Steel ..... Table 10.1.1, 10.1.2, 10.1.3
Testing and acceptance ..... 10.10, A.10.10.2.1 to A.10.10.2.2.6
Type and class 10.1.4, A.10.1.4
Working pressure 10.1.5, 10.2.3, A.10.1.5
Unions 6.4.6, A.6.4.6
Unit loads
Definition 3.9.1.26
Solid unit load of nonexpanded plastic ..... Fig. 15.2.22.1
Definition 3.9.2.8
Units of measurement 1.6.1
Unobstructed construction 8.4.6.3, 8.11.4.1.1, A.8.4.6.3
Definition 3.7.2, A.3.7.2
Unstable piles ..... Fig. 15.2.22.15.2.1
Definition 3.9.2.5, A.3.9.2.5
Upright sprinklers ..... 8.6, 12.6.2, 12.6.3, A.8.6.2.2.1 to A.8.6.7.2(4)
Ceiling pockets ..... 8.6.7, 8.8.7, A.8.6.7.1, A.8.6.7.2(4), A.8.8.7.1, A.8.8.7.2(4)
Clearance to storage 8.6.6, 8.8.6, A.8.8.6
Compact storage 20.6.3
Concealed spaces, in 8.6.4.1.4
Definition 3.6.2.6
Deflector position ..... 8.6.4, 8.8.4, 8.10.4.1, 8.12.4.1.4, 8.12.4.1.5, A.8.6.4.1.2(5) to A.8.6.4.1.3.3, A.8.8.4.1.1.4(A) to A.8.8.4.1.3
Elevator hoistways 8.15.5.5, A.8.15.5.5
Extended coverage ..... 8.8, A.8.8.2.1 to A.8.8.7.2(4)
Hangers, clearance to 9.2.3.3
Installation ..... 7.2.2(1), 7.3.2.5(1), 7.4.2.4(1), 8.3.1.3, A.8.3.1.3
Obstructions to discharge ..... 8.6.4.1.2, 8.6.4.1.5, 8.6.5, 8.8.5, 8.10.6, A.8.6.4.1.2(5), A.8.6.5.1.2 to A.8.6.5.3.3, A.8.8.5.1.2 to A.8.8.5.3, A.8.10.6.2.1.3 to A.8.10.6.3
Oxidizer solids and liquids storage ..... 22.37.1.4.4.4(F)
Palletized, solid pile, bin box, or shelf storage ..... Table 14.4.1
Permitted uses 8.4.1
Protection areas 8.6.2, 8.8.2, A.8.6.2.2.1, A.8.8.2.1, A.8.8.2.2.1
Protective caps and straps, removal of 8.3.1.5.3
Residential 8.10.4.1
Roll paper storage ..... Table 19.1.2.3
Roof protection use 7.8.8.6
Spacing 8.6.3, 8.8.3, A.8.6.3.2.3, A.8.6.3.2.4
Terminals, piers, and wharves 22.22.2.1.2.1, A.22.22.2.1.2.1
Utility gas plants, LP-Gas at 22.12

-V-

Valve rooms 7.2.5.2, 7.3.1.8.2
Valves ..... 6.7, 8.16.1, A.6.7.4, A.8.16.1.1 to A.8.16.1.6; *see also* Check valves; Control valves; Drain valves; Dry pipe valves; Indicating valves; Preaction valves; Pressure-reducing valves
Accessibility 8.1.2, 8.16.1.1.7, A.8.1.2, A.8.16.1.1.7
Alarm ..... 8.17.1.2, 8.17.1.3, 8.17.2.4.2(1)
Antifreeze systems ..... 7.6.3, A.7.6.3.1 to A.7.6.3.6
Backflow prevention 8.17.4.6.1, A.8.17.4.6.1
Closure time 6.7.1.2
Combined systems 7.4.3, A.7.4.3.2
Deluge 8.17.1.3.1, 8.17.1.3.2, 25.2.3.3.1
Differential-type 25.2.1.15
Equivalent pipe lengths 23.4.3
Fire department connections 8.17.2.5

Copyright 2014 National Fire Protection Association (NFPA). Licensed, by agreement, for individual use and download on October 4, 2014 to LEADER and READER for designated user PATTARAPORN SRITRAKOOL. No other reproduction or transmission in any form permitted without written permission of NFPA. For inquires or to report unauthorized use, contact licensing@nfpa.org.

Floor control valve assemblies 8.16.1.5, A.8.16.1.5.1
Gate 6.7.1.3.1
Hose connections ..... 8.17.5.1.1.1, 8.17.5.1.1.3, 8.17.5.1.3(3)
Hydraulic systems for gate and valve operators 22.29.1.6
Identification 6.7.4, 7.7.1.5, 8.16.1.1.8, 8.16.1.4.3, 26.2.6.3, A.6.7.4
Isolation 10.6.2
Listed indicating valves 6.7.1.3
Low-pressure blowoff ..... 8.3.2.5(3)
Marine systems 26.2.6, 26.7.4.2, 26.8.3.1, A.26.2.6.1
Outside sprinklers 7.8.2.2, 7.8.3.1, 7.8.4.1, 7.8.4.2, A.7.8.4.2.1, A.7.8.4.2.3
In pits 8.16.1.1.6, 8.16.1.4, A.8.16.1.1.6, A.8.16.1.4.2
Pressure requirements 6.7.1.1
Reconditioned 6.1.2.1
Sectional 8.16.2.4.3
Supervision 8.16.1.1.2, A.8.16.1.1.2
Test 6.7.3, 26.2.6.2, 26.7.3.11
Underground piping ..... 10.7.1, 10.7.3 to 10.7.5, 10.7.11
Wafer-type 6.7.2
Vaults, film storage 22.7.1.3, A.22.7.1.3
Velocity pressure formula 23.4.2.2
Ventilation, cooking areas ..... 7.10, 8.3.2.5(7), Fig. A.7.10.2
Vents, roof 12.1.1, A.12.1.1.1, A.12.1.1.3, C.6
Vertical obstructions to sprinklers 8.6.5.2.2, 8.7.5.2.2, 8.8.5.2.2, 8.9.5.2.2, 8.10.6.2.2, 8.10.7.2.2, A.8.6.5.2.2.1, A.8.7.5.2.2.1, A.8.9.5.2.2.1
Vertical shafts ..... 8.15.2, 8.15.4, 8.15.13.1.2, 11.2.3.1.4(4), A.8.15.2.2, A.8.15.4, A.11.2.3.1.4(4)(d), A.11.2.3.1.4(4)(j), D.2.3.1.1, D.2.4.1.1
Building service chutes 11.2.3.4.1
Gravity chutes 22.15.2.2, A.22.15.2.2
Marine systems 26.4.5
Mercantile occupancies D.1.1.9.1, D.1.1.10.1, D.2.23.2.1, D.2.24.2.1
Waste and linen chutes 22.15.2.2, A.22.15.2.2

-W-

Walkways, sprinklers under 14.5
Walls
Common 8.2.4
Deflector distance from 8.7.4.1.2, A.8.7.4.1.2.1
Distance from sprinklers 8.5.3.2, 8.5.3.3, 8.6.3.2, 8.6.3.3, 8.7.3.2, 8.7.3.3, 8.8.3.2, 8.8.3.3, 8.9.3.2, 8.9.3.3, 8.9.4.1.2, 8.10.3.2, 8.11.3.2, 8.11.3.3, 8.12.3.2, 8.12.3.3, A.8.6.3.2.3, A.8.6.3.2.4, A.8.9.4.1.2.1
Pipe openings through, clearance for 9.3.4, A.9.3.4
Washers, underground joints ... 10.8.3.1.4, 10.8.3.4, 10.8.3.5, A.10.8.3.5
Waste compactors 22.15.2.4
Waste handling systems 22.15, A.22.15.2.2
Water additives ..... *see* Additives
Water-cooling towers ..... 22.21, A.22.21.1.1.1 to A.22.21.2.10.3
Counterflow 22.21.1.1.1, 22.21.1.2.1, 22.21.2.1, A.22.21.1.1.1, A.22.21.2.1
Crossflow 22.21.1.1.2, 22.21.1.2.2, 22.21.1.2.3, 22.21.2.2, A.22.21.1.1.2, A.22.21.2.2
Exposure protection 22.21.1.6
Fan decks 22.21.1.2.1, 22.21.1.2.2, 22.21.1.3, 22.21.1.4, 22.21.2.1.1, 22.21.2.2.1, 22.21.2.3, 22.21.2.4, A.22.21.2.3
Minimum rate of application 22.21.1.2
Types of systems 22.21.1.1, A.22.21.1.1.1, A.22.21.1.1.2
Water supply ..... 22.21.1.7, A.22.21.1.7.1.1 to A.22.21.1.7.2.2
Water curtains 11.3.3
Water demand ..... 11.1.4, 11.2.1.1, 11.2.3.2, 23.4.4.5.4, A.11.1.4.1, A.11.1.4.2, A.11.2.1.1, A.11.2.3.2.5, A.11.2.3.2.7; *see also* Density/area method; Hydraulically calculated water demand flow rate; Water supplies
Building and storage height 12.1.3.3
Ceiling sprinklers, rack storage 16.2.1.3.1, 16.2.1.3.2, 16.3.1.1, 16.3.1.2, 17.3.1.3, A.16.2.1.3.1, A.16.2.1.3.2, A.16.3.1.1, A.17.3.1.3, C.14, C.15, C.23
Concealed spaces or under obstructions 23.4.4.6.5
Dry pipe systems 7.2.3.6, 11.2.3.2.5, A.11.2.3.2.5
Hose allowance ..... 11.1.6, A.11.1.6.1(3) to A.11.1.6.4
Hybobaric facilities 22.34.1.11, A.22.34.1.11
In-rack sprinklers ..... 13.3.3, 16.1.6.6, 16.2.2.7.7, 16.2.3.6.8, 16.3.1.3.3, 16.3.2.7.7, 17.2.1.5.6, 17.2.2.6.7, 17.2.3.4.8, 17.3.1.13, 18.5.3, 23.8.2 to 22.8.4
Marine systems 26.5.1.2, 26.5.2, 26.7.3.3, A.26.5.2, A.26.7.3.3
Metal/nonmetal mining and metal mineral processing facilities 22.36.1.1.2
Palletized, solid pile, bin box, or shelf storage ... 15.1.1, 16.2.1.3.1, 16.2.1.3.2, 16.2.1.3.3.1, 16.2.1.3.3.2, 16.3.1.1, 16.3.1.2, 17.2.1.2, A.15.1.1, A.16.2.1.3.1, A.16.2.1.3.2, A.16.3.1.1, A.17.2.1.2.4, C.8, C.14, C.15, C.23
Pipe schedule method 11.2.2, A.11.2.2.6
Preaction systems 11.2.3.2.5, A.11.2.3.2.5
Rack storage systems .. 16.2.1.3.1, 16.2.2.7.7, 16.2.3.6.8, 16.3.2.7.7, 17.3.1.3, A.16.2.1.3.1, A.17.3.1.3, C.14
Room design method 11.2.3.3, A.11.2.3.3.1
Storage 12.6.8
Tires, rack storage of 18.5.3
Water curtains 11.3.3.3
Waterflow alarms/detection devices ..... 6.9, 8.17.1, 26.4.12.2 to 25.4.12.5, A.6.9.2.4 to A.6.9.4, A.8.17.1, C.4
Attachments
Electrically operated 6.9.4, A.6.9.4
General 6.9.3, A.6.9.3.2
Circulating closed-loop systems 7.7.1.7
Definition 3.5.13
Drains 6.9.5
Flow tests ..... 25.2.3.1, 25.3.1(3), 26.8.2
High-rise buildings 8.17.1.6, A.8.17.1.6, D.1.1.2.1, D.2.2.1.1
Local 8.17.1.1
Mechanically operated 8.17.1.5, A.8.17.1.5
Supervision 11.2.2.5
Water-motor-operated devices 8.17.1.5.1
Water spray systems ..... 22.21.1.6.1, 22.27.1.1(1), 22.27.1.7 to 22.27.1.9, 22.29.1.4, 22.37.1.3.1
Water supplies ..... 4.3(3), 7.11.1, 11.1.3, 11.1.5, 11.1.6, 11.2.3.2.1, Chap. 24, A.4.3(3), A.11.1.6.1(3) to A.11.1.6.4, A.11.5.2, A.11.5.3; *see also* Mains; Water demand
Aircraft engine test facilities 22.26.1.2
Alternative sprinkler system designs 21.4
Arrangement 24.1.6, A.24.1.6.2
Baled cotton storage 20.4.1.1, 20.4.1.2
Capacity 24.1.2, 24.2.4.2
Cellular nitrate film, rooms containing 22.7.1.2
Concealed spaces, sprinklers in 11.3.4.3
Corrosive properties, protection from 8.16.4.2.2, A.8.16.4.2.2
Domestic, connections to 22.4.1.4, B.1
Hydroelectric generating plants A.22.29.1, A.22.29.2
Liquefied natural gas (LNG), production, storage, and handling of 22.13.1
LP-Gas at utility gas plants 22.12.1.1
Marine ..... 26.7, A.26.7.2.7 to A.26.7.4.6
Definition ..... 3.10.10, 26.1.3(13)
Metal/nonmetal mining and metal mineral processing facilities 22.36.1.1
Meters 24.1.7, A.24.1.7
Multiple hazard classifications, systems with 12.7.2, A.12.7.2
Nuclear power plants 22.27.1.1, 22.27.2.1.2, 22.28.1, A.22.27.1.1, A.22.27.2.1.2
Number of supplies 24.1.1
Occupancy classifications 11.2.1.2.1
Outside sprinklers 7.8.2, 11.3.2.2
Palletized, solid pile, bin box, or shelf storage ..... 14.2.2, Table 14.3.1, 14.3.4
Pendent sprinklers, return bend requirement 8.15.19.1

Copyright 2014 National Fire Protection Association (NFPA). Licensed, by agreement, for individual use and download on October 4, 2014 to LEADER and READER for designated user PATTARAPORN SRITRAKOOL. No other reproduction or transmission in any form permitted without written permission of NFPA. For inquires or to report unauthorized use, contact licensing@nfpa.org.

Private fire service mains .....*see* Private fire service mains
Rack storage systems 16.2.1.1, 17.3.15
Raw water source (definition) 3.3.19
Residential sprinklers 11.3.1.6
Roll paper storage ..... 19.1.1.1 to 19.1.1.3
Rubber tire storage 18.2.5, 18.3
Spray application areas 22.4.1.3, 22.4.1.4
Storage, requirements for ..... 12.7.1 to 12.7.6, 12.8, A.12.7.2, A.12.8.1, A.12.8.2
Treatment 23.2, 24.1.5, A.23.2.1.1, A.24.1.5
Types ..... 24.2, A.24.2.1 to A.24.2.4.3
Water-cooling towers ..... 22.21.1.6.2.2, 22.21.1.7, A.22.21.1.7.1.1 to A.22.21.1.7.2.2
Water curtains 11.3.3.3
Waterworks, connections to 24.1.8, 24.2.1, 24.2.2, A.24.1.8, A.24.2.1, A.24.2.2
Water temperature, closed-loop systems 7.7.1.3
Waterworks systems, connections to 24.1.8, 24.2.1, 24.2.2, A.24.1.8, A.24.2.1, A.24.2.2
Welded pipe ..... 6.5.2, 9.2.4.2, 10.8.1.2, A.6.5.2.2 to A.6.5.2.4.3
Qualifications 6.5.2.5
Records 6.5.2.6
Welding, oxygen-fuel gas systems for 22.9
Welding studs 9.1.3.9, 9.1.4.1, A.9.1.3.9.3, A.9.1.4.1
Wet barrel hydrants (definition) 3.8.2.1.6
Wet pipe sprinkler systems 7.1, 12.4, A.12.4
Baled cotton storage ..... Table 20.4.2.1
Cleanrooms 22.23.2.1, A.22.23.2.1
Connections 8.16.1.1.3.5, 8.16.1.1.4.4, 12.8.5, A.8.16.1.1.3.5
Control mode specific application (CMSA) sprinklers used in 8.4.7.1, 8.4.7.3.3
Cultural resource properties 22.30.1.3.4
Definition 3.4.11
Drainage 8.16.2.2, 8.16.2.5.2, A.8.16.2.5.2.1
Dry sprinklers attached to 8.4.9, A.8.4.9.1, A.8.4.9.3
Early suppression fast-response sprinklers used in 8.4.6.1
Fire department connections ..... 8.17.2.4.2(1), 8.17.5.2.1
High bay records storage 20.7.3
Hose connections 8.17.5.1.4, 11.1.6.4, A.8.17.5.1.4, A.11.1.6.4
K-factors less than K-5.6 ..... 8.3.4.2(2)
Organic peroxide formulations ..... 22.37.1.3.2(1)
Plastics display/storage, retail stores 20.3, A.20.3
Pressure gauges 7.1.1
Quick-response sprinklers used in ..... 11.2.3.2.3.1(1)
Relief valves 7.1.2
Residential sprinklers used in 8.4.5.2
Roll paper storage ..... 19.1.1.4, Table 19.1.2.2, Table 19.1.2.3
Slatted shelves, rack storage 16.2.4.1.2, 17.2.4.1.2, C.20
Spray application areas 22.4.1.7
Test connections 8.17.4.2, A.8.17.4.2
Water-cooling towers 22.21.1.1.1, 22.21.1.7.2, A.22.21.1.1.1, A.22.21.1.7.2.1, A.22.21.1.7.2.2
Waterflow detecting devices 6.9.2.1, 6.9.2.4, A.6.9.2.4
Wharves ..... 22.22, A.22.22.1.1 to A.22.22.2.1.2.1(B)(5)
Window protection 7.8.8.4
Atriums D.1.1.1.1, D.2.1.2.1
Marine systems 26.4.3, 26.5.2, 26.6.2, A.26.5.2
Show windows, sprinklers under ..... 8.3.2.5(6)
Skylights 8.5.7
Wood, fasteners in 9.1.5
Wood joist construction .....*see also* Bar joist construction
Composite wood joist construction 8.15.1.4
Definition A.3.7.1
Concealed spaces of ..... 8.6.4.1.4, 11.2.3.1.4(4)(d), 11.2.3.1.4(4)(i), 11.2.3.1.4(4)(j), 11.3.4, 12.9.2(4), 12.9.2(9), 12.9.2(10), A.11.2.3.1.4(4)(d), A.11.2.3.1.4(4)(j), A.12.9.2(4), A.12.9.2(10)
Control mode specific application (CMSA) sprinklers 14.3.3, 15.3.3, 16.2.2.4, 16.3.2.4, 17.2.2.3
Definition A.3.7.1
Double joist obstructions to sprinklers 8.6.4.1.5
Piers/wharves sprinkler installation ... 22.22.2.1.2.1, A.22.22.2.1.2.1
Wood pallets ..... 5.6.2.1, 5.6.3.1(1)
Definition 3.9.1.27
Wood truss construction .....*see* Trusses
Working plans 23.1, A.23.1
Worksheets, hydraulic calculations 23.3.3, A.23.3.3
Wrench, sprinkler 6.2.9.6, A.6.2.9.6

-Y-

Yard mains 12.8.3, 22.27.1.2

Copyright 2014 National Fire Protection Association (NFPA). Licensed, by agreement, for individual use and download on October 4, 2014 to LEADER and READER for designated user PATTARAPORN SRITRAKOOL. No other reproduction or transmission in any form permitted without written permission of NFPA. For inquires or to report unauthorized use, contact licensing@nfpa.org.

Formal Interpretation

NFPA 13

Installation of Sprinkler Systems

2013 Edition

Reference: 8.15.9
F.I. No.: 13-99-2

Background: Section 8-5.6 states that the clearance between the sprinkler deflector and the top of storage shall be 18 in. (457 mm) or greater. Section 8.15.9 provides guidance on sprinkler protection of library stacks. This guidance allows floor to ceiling bookshelves and requires sprinklers to be installed in every aisle with a distance between sprinklers along aisles not to exceed 12 ft (3.6 m).

Question: Is it acceptable to apply the principles of NFPA 13, 8.15.9 to the storage of Medical Records on fixed open bookshelves, thereby allowing the tops of the bookshelves used for this purpose to come within less than 18 inches of the horizontal plane of the sprinkler deflector with sprinklers installed in every aisle?

Answer: Yes.

Issue Edition: 1999
Reference: 5-13.10
Issue Date: January 3, 2002
Effective Date: January 23, 2002

Copyright © 2012 All Rights Reserved
NATIONAL FIRE PROTECTION ASSOCIATION

Copyright 2014 National Fire Protection Association (NFPA). Licensed, by agreement, for individual use and download on October 4, 2014 to LEADER and READER for designated user PATTARAPORN SRITRAKOOL. No other reproduction or transmission in any form permitted without written permission of NFPA. For inquires or to report unauthorized use, contact licensing@nfpa.org.

Formal Interpretation

NFPA 13

Installation of Sprinkler Systems

2013 Edition

Reference: 11.2.3.1.8(1) and 11.2.3.2.3.1
F.I. No.: 13-02-1

Question No. 1: Is it the intent of 11.2.3.2.3.1 to permit the system area of operation to be reduced below the limits of Figure 11.2.3.1.1 (e.g., less than 1500 sq ft)?

Answer: Yes

Question No. 2: If the Answer to Question No. 1 is yes, is the intent to allow the density to be less than the limits of Figure 11.2.3.1.1 (e.g., less than 0.1 gpm/sq ft for Light Hazard) as long as the point was legitimately picked from the density/area curve and appropriately reduced per 11.2.3.2.3?

Answer: No

Question No. 3: Is it the intent of Section 11.2.3.1.4(1) to require the densities for 1500 sq ft for all applications, including when Section 11.2.3.2.3.1 is applied, when the final area of sprinkler operation is less than 1500 sq ft?

Answer: Yes

Issue Edition: 2002
Reference: 11.2.3.1.8.1 (1) and 11.2.3.2.3.1
Issue Date: March 9, 2004
Effective Date: March 29, 2004

Copyright © 2012 All Rights Reserved
NATIONAL FIRE PROTECTION ASSOCIATION

Copyright 2014 National Fire Protection Association (NFPA). Licensed, by agreement, for individual use and download on October 4, 2014 to LEADER and READER for designated user PATTARAPORN SRITRAKOOL. No other reproduction or transmission in any form permitted without written permission of NFPA. For inquires or to report unauthorized use, contact licensing@nfpa.org.

Formal Interpretation

NFPA 13

Installation of Sprinkler Systems

2013 Edition

Reference: 17.3.4.1.4
F.I. No.: 13-02-2

Question No. 1: Are the dimensions in Figure 17.3.4.1.4 intended to be the only acceptable combination of rack height, clearance, flue space width, rack length and rack width?

Answer: No

Question No. 2: Are other situations not shown on the figure, such as double row racks with a width of 9 ½ ft (4 ft loads with 6 inch longitudinal flue), a height other than 54 ft and a length greater than 24 ft allowed as long as they comply with the other rules of NFPA 13?

Answer: Yes

Issue Edition: 2002
Reference: 12.3.5.4.1.4
Issue Date: July 16, 2004
Effective Date: August 4, 2004

Copyright © 2012 All Rights Reserved
NATIONAL FIRE PROTECTION ASSOCIATION

Copyright 2014 National Fire Protection Association (NFPA). Licensed, by agreement, for individual use and download on October 4, 2014 to LEADER and READER for designated user PATTARAPORN SRITRAKOOL. No other reproduction or transmission in any form permitted without written permission of NFPA. For inquires or to report unauthorized use, contact licensing@nfpa.org.

Formal Interpretation

NFPA 13

Installation of Sprinkler Systems

2013 Edition

Reference: 22.4.4.8
F.I. No.: 13-02-3

Question No. 1: Can residential sprinklers of different orifice sizes be used within a compartment provided they have different directional discharge characteristics (i.e. pendent vs. sidewall)?

Answer: Yes.

Question No. 2: Can residential sprinklers of different orifice sizes be used within a compartment provided they have different thread sizes such that replacement cannot be confused?

Answer: Yes.

Question No. 3: Can residential sprinklers of different orifice sizes be used within a compartment without regard to discharge characteristics, thread sizes, or maximum protection areas?

Answer: No.

Issue Edition: 2002
Reference: 8.4.4.6
Issue Date: September 9, 2005
Effective Date: September 29, 2005

Copyright © 2012 All Rights Reserved
NATIONAL FIRE PROTECTION ASSOCIATION

Copyright 2014 National Fire Protection Association (NFPA). Licensed, by agreement, for individual use and download on October 4, 2014 to LEADER and READER for designated user PATTARAPORN SRITRAKOOL. No other reproduction or transmission in any form permitted without written permission of NFPA. For inquires or to report unauthorized use, contact licensing@nfpa.org.

Tentative Interim Amendment

NFPA® 13

Standard for the Installation of Sprinkler Systems

2013 Edition

Reference: Figure 17.2.1.4(f)
TIA 13-3
(SC 14-3-3/TIA Log #1124)

Pursuant to Section 5 of the NFPA *Regulations Governing the Development of NFPA Standards*, the National Fire Protection Association has issued the following Tentative Interim Amendment to NFPA 13, *Standard for the Installation of Sprinkler Systems,* 2013 edition. The TIA was processed by the Technical Committee on Sprinkler Discharge Criteria and the Automatic Sprinkler Systems Correlating Committee, and was issued by the Standards Council on March 3, 2014, with an effective date of March 23, 2014.

A Tentative Interim Amendment is tentative because it has not been processed through the entire standards-making procedures. It is interim because it is effective only between editions of the standard. A TIA automatically becomes a public input of the proponent for the next edition of the standard; as such, it then is subject to all of the procedures of the standards-making process.

1. Replace current Figure 17.2.1.4(f) with correct figure as follows:

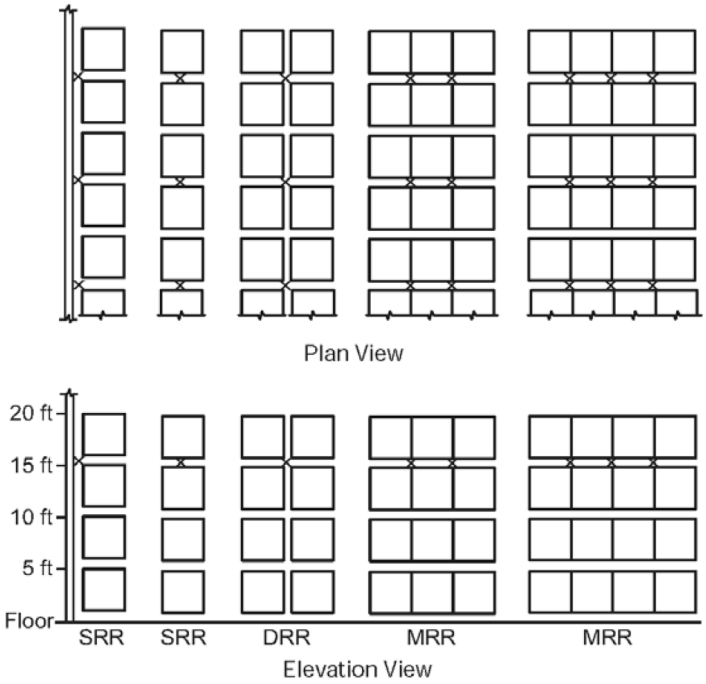

Issue Date: March 3, 2014
Effective Date: March 23, 2014

(Note: For further information on NFPA Codes and Standards, please see www.nfpa.org/codelist**)**

Copyright © 2014 All Rights Reserved
NATIONAL FIRE PROTECTION ASSOCIATION

Copyright 2014 National Fire Protection Association (NFPA). Licensed, by agreement, for individual use and download on October 4, 2014 to LEADER and READER for designated user PATTARAPORN SRITRAKOOL. No other reproduction or transmission in any form permitted without written permission of NFPA. For inquires or to report unauthorized use, contact licensing@nfpa.org.

Sequence of Events Leading to Issuance of this NFPA Committee Document

Step 1: Call for Proposals

- Proposed new Document or new edition of an existing Document is entered into one of two yearly revision cycles, and a Call for Proposals is published.

Step 2: Report on Proposals (ROP)

- Committee meets to act on Proposals, to develop its own Proposals, and to prepare its Report.
- Committee votes by written ballot on Proposals. If two-thirds approve, Report goes forward. Lacking two-thirds approval, Report returns to Committee.
- Report on Proposals (ROP) is published for public review and comment.

Step 3: Report on Comments (ROC)

- Committee meets to act on Public Comments to develop its own Comments, and to prepare its report.
- Committee votes by written ballot on Comments. If two-thirds approve, Report goes forward. Lacking two-thirds approval, Report returns to Committee.
- Report on Comments (ROC) is published for public review.

Step 4: Technical Report Session

- "*Notices of intent to make a motion*" are filed, are reviewed, and valid motions are certified for presentation at the Technical Report Session. ("Consent Documents" that have no certified motions bypass the Technical Report Session and proceed to the Standards Council for issuance.)
- NFPA membership meets each June at the Annual Meeting Technical Report Session and acts on Technical Committee Reports (ROP and ROC) for Documents with "certified amending motions."
- Committee(s) vote on any amendments to Report approved at NFPA Annual Membership Meeting.

Step 5: Standards Council Issuance

- Notification of intent to file an appeal to the Standards Council on Association action must be filed within 20 days of the NFPA Annual Membership Meeting.
- Standards Council decides, based on all evidence, whether or not to issue Document or to take other action, including hearing any appeals.

Committee Membership Classifications

The following classifications apply to Technical Committee members and represent their principal interest in the activity of the committee.

M *Manufacturer:* A representative of a maker or marketer of a product, assembly, or system, or portion thereof, that is affected by the standard.

U *User:* A representative of an entity that is subject to the provisions of the standard or that voluntarily uses the standard.

I/M *Installer/Maintainer:* A representative of an entity that is in the business of installing or maintaining a product, assembly, or system affected by the standard.

L *Labor:* A labor representative or employee concerned with safety in the workplace.

R/T *Applied Research/Testing Laboratory:* A representative of an independent testing laboratory or independent applied research organization that promulgates and/or enforces standards.

E *Enforcing Authority:* A representative of an agency or an organization that promulgates and/or enforces standards.

I *Insurance:* A representative of an insurance company, broker, agent, bureau, or inspection agency.

C *Consumer:* A person who is, or represents, the ultimate purchaser of a product, system, or service affected by the standard, but who is not included in the *User* classification.

SE *Special Expert:* A person not representing any of the previous classifications, but who has a special expertise in the scope of the standard or portion thereof.

NOTES:
1. "Standard" connotes code, standard, recommended practice, or guide.
2. A representative includes an employee.
3. While these classifications will be used by the Standards Council to achieve a balance for Technical Committees, the Standards Council may determine that new classifications of members or unique interests need representation in order to foster the best possible committee deliberations on any project. In this connection, the Standards Council may make appointments as it deems appropriate in the public interest, such as the classification of "Utilities" in the National Electrical Code Committee.
4. Representatives of subsidiaries of any group are generally considered to have the same classification as the parent organization.

Copyright 2014 National Fire Protection Association (NFPA). Licensed, by agreement, for individual use and download on October 4, 2014 to LEADER and READER for designated user PATTARAPORN SRITRAKOOL. No other reproduction or transmission in any form permitted without written permission of NFPA. For inquires or to report unauthorized use, contact licensing@nfpa.org.

Stay Up-To-Date. Join NFPA® Today!

☑ **YES** Please enroll me as a member of NFPA for the term checked below. Activate all benefits, and ship my *Member Kit* including the *Benefits Guide* and other resources to help me make the most of my NPFA membership.

Please allow three to four weeks for the kit to arrive.

Billing Information:

Name _____ Title _____

Organization _____

Address _____

City _____ State _____ Zip/Postal Code _____

Country _____

Phone _____ E-mail _____

Priority Code: 8J-MIS-1Z

Please Answer The Following Questions:

Job Title *(check one)*

- ❑ Architect, Engineer, Consultant, Contractor (C17)
- ❑ Facilities Safety Officer (F14)
- ❑ Fire Chief, Other Fire Service (A11)
- ❑ Loss Control, Risk Manager (L11)
- ❑ Inspector, Building Official, Fire Marshal (F03)
- ❑ Owner, President, Manager, Administrator (C10)
- ❑ Other (please specify): (G11)_____

Type of Organization *(check one)*

- ❑ Architecture, Engineering, Contracting (A14)
- ❑ Commercial Firm (Office, Retail, Lodging, Restaurant) (G13)
- ❑ Electrical Services, Installation (J11)
- ❑ Fire Service, Public and Private (AA1)
- ❑ Government (C12)
- ❑ Industrial Firm (Factory, Warehouse) (C11)
- ❑ Institutional (Health Care, Education, Detention, Museums) (B11)
- ❑ Insurance, Risk Management (B12)
- ❑ Utilities (G12)
- ❑ Other (please specify): (G11)_____

4 Easy Ways to Join

Fax: 1-800-593-6372, Outside the U.S. +1-508-895-8301
Mail: NFPA Membership Services Center,
11 Tracy Drive, Avon, MA 02322-9908
Online: nfpa.org
Call: 1-800-344-3555
Outside the U.S. call +1-617-770-3000

6/12-D

Terms and Payment:

- ❑ 1 year ($165)
- ❑ 2 years ($300) SAVE $30
- ❑ 3 years ($430) SAVE $65

Annual membership dues include a $45 subscription to *NFPA Journal*®. Regular membership in NFPA is individual and non-transferable. NFPA Journal is a registered trademark of the National Fire Protection Association, Quincy, MA 02169. Voting privileges begin after 180 days of individual membership. Prices subject to change.

Payment Method:

Check One:

- ❑ Payment Enclosed *(Make check payable to NFPA.)*
- ❑ Purchase Order *(Please attach this form to your P.O.)*
- ❑ Bill Me Later *(Not available on International memberships.)*

Charge My: ❑ VISA ❑ MasterCard ❑ AmEx ❑ Discover

Card #_____

Expiration Date _____

Name on Card _____

Signature _____

International members: Please note prepayment is required on all International orders. Be sure to enclose a check or select your preferred credit card option.

100% Money-Back Guarantee

If anytime during your first year you decide membership is not for you, let us know and you'll receive a 100% refund of your dues.

Copyright 2014 National Fire Protection Association (NFPA). Licensed, by agreement, for individual use and download on October 4, 2014 to LEADER and READER for designated user PATTARAPORN SRITRAKOOL. No other reproduction or transmission in any form permitted without written permission of NFPA. For inquires or to report unauthorized use, contact licensing@nfpa.org.

"Member-Only" Benefits
Keeps You Up-To-Date!

FREE! Technical Support — Technical Support by Phone/Email. Get fast, reliable answers to all code-related questions—from electrical safety for employee workplaces to carbon dioxide extinguishing systems—from NFPA's team of fire protection specialists.

NFPA Journal® — THE journal of record for fire protection, this bi-monthly publication will keep you abreast of the latest fire prevention and safety practices, as well as new technologies and strategies for protecting life and property from fire.

NFPA Update — This easy-to-read monthly e-newsletter will keep you up-to-date on important association programs such as the annual meeting; bring you times of interest from NFPA's regional offices; and alert you to nationwide events and opportunities you won't want to miss.

NFPA News — From new standards for dry cleaning plants to warning equipment for household carbon monoxide, this monthly online update keeps you abreast of additions of changes that could impact how you do you work.

NFPA Standards Directory — The NFPA Standards Directory is your complete guide to NFPA's code-making process. Simply access your online NFPA member profile for document revision guidelines, the revision cycle schedule, and forms for submitting Proposals and Comments. Your online NFPA member profile and access to the NFPA Standards Directory is automatically generated once you join NFPA.

FREE! Section Membership — Share YOUR expertise with others in any of 16 industry-specific sections covering your own field of interest.

Member Kit — Includes Membership Certificate, Pin, Decals, ID Card, and Camera-ready Logo Art. Display the NFPA member logo proudly on your business correspondence, literature, website, and vehicles.

10% Discounts — Save hundreds of dollars each year on the many products and services listed in the NFPA Catalog, including codes and standards publications, handbooks, training videos, and other education materials to increase your knowledge and skills.

Voting Rights — Your chance to help shape the future direction of fire prevention codes and standards. Voting rights go into effect 180 days from the start of individual membership.

Conference Invitation— Invitation to the NFPA Conference and Expo. Attend this important meeting at discounted rates as a member of NFPA.

Join NFPA today!
www.nfpa.org

NFPA® and *NFPA Journal*® are registered trademarks of the National Fire Protection Association, Quincy, MA 02169-7471